SEWRF RECLAIMED WATER AUTOMATION

COUNTY PROJECT #6013792

ISSUE FOR BID
AUGUST 2010

MANATEE COUNTY, FLORIDA

PROJECT VICINITY MAP
SECTION 35S, TOWNSHIP 18E, RANGE 1

McKIM & CREED
1365 Hamlet Avenue
Clearwater, FL 33756
Phone: (727)442-7196, Fax: (727)461-3827
EB0006691
www.mckimcreed.com

MATTHEW S. LOVE, P.E.
No. 66118

SEWRF RECLAIMED WATER AUTOMATION AND VFD REPLACEMENT
AUGUST 2010
ISSUE FOR BID
COVER SHEET

S:\1024\01251\05-Drawings\General\COVER-1024-01251.dwg, 8/25/2010 11:16:10 PM, Brian Vaught

GENERAL NOTES

1. THESE PLANS ARE SOLELY TO ASSIST THE CONTRACTOR IN ASSESSING THE NATURE AND EXTENT OF THE EXISTING CONDITIONS WHICH MAY BE ENCOUNTERED DURING THE COURSE OF THE WORK. CONTRACTORS ARE DIRECTED TO CONDUCT WHATEVER INVESTIGATION THEY DEEM NECESSARY, PRIOR TO BIDDING, TO DETERMINE THE ACTUAL CONDITIONS THAT WILL BE ENCOUNTERED.

2. LOCATIONS, ELEVATIONS AND DIMENSIONS OF EXISTING UTILITIES, STRUCTURES, AND OTHER FEATURES ARE SHOWN BASED ON THE BEST INFORMATION AVAILABLE AT THE TIME OF PREPARATION OF THESE PLANS BUT DO NOT PURPORT TO BE ABSOLUTELY CORRECT. THE CONTRACTOR SHALL VERIFY, PRIOR TO CONSTRUCTION, THE LOCATIONS, ELEVATIONS, AND DIMENSIONS OF ALL EXISTING UTILITIES, STRUCTURES, AND OTHER FEATURES (WHETHER OR NOT SHOWN ON THE PLANS) AFFECTING HIS WORK.

3. THE CONTRACTOR SHALL REVIEW AND VERIFY ALL DIMENSIONS ON THE PLANS AND REVIEW ALL FIELD CONDITIONS THAT MAY AFFECT CONSTRUCTION. SHOULD DISCREPANCIES OCCUR, THE CONTRACTOR SHALL NOTIFY THE ENGINEER TO OBTAIN WRITTEN CLARIFICATION BEFORE COMMENCING WITH CONSTRUCTION.

4. THE CONTRACTOR SHALL PROTECT ALL EXISTING STRUCTURES, STORM DRAINS, SEWERS, UTILITIES, AND OTHER FACILITIES IN THE CONSTRUCTION AREA. THE CONTRACTOR SHALL REPAIR ANY DAMAGES DUE TO HIS CONSTRUCTION ACTIVITIES AT NO ADDITIONAL COST TO THE OWNER.

5. WHERE IT IS NECESSARY TO DEFLECT PIPE EITHER HORIZONTALLY OR VERTICALLY, PIPE JOINT DEFLECTION SHALL NOT EXCEED 75% OF THE MANUFACTURERS' MAXIMUM RECOMMENDED DEFLECTION.

6. THE CONTRACTOR SHALL BE RESPONSIBLE FOR THE MAINTENANCE OF THE EXISTING DRAINAGE SYSTEM WITHIN THE LIMITS OF THE PROJECT AREA FOR THE DURATION OF THE PROJECT.

7. THE CONTRACTOR SHALL PROVIDE CERTIFIED RECORD DRAWINGS AS OUTLINED IN THE SPECIFICATIONS. RED-LINE DRAWINGS SHALL BE CURRENT WITH EACH PAY APPLICATION SUBMITTED AND WILL BE CHECKED AS PART OF THE PAY APPLICATION REVIEW PROCESS. PAYMENT WILL NOT BE MADE TO CONTRACTOR WITHOUT APPROVED RED-LINE DRAWINGS.

8. FIELD CONDITIONS MAY NECESSITATE ALIGNMENT AND GRADE DEVIATION OF THE PROPOSED PIPELINES TO AVOID CONFLICTS. NO ADDITIONAL PAYMENT SHALL BE MADE WITHOUT PRIOR APPROVAL OF THE OWNER AND THE OWNER'S ENGINEER.

9. THE CONTRACTOR SHALL INCLUDE IN HIS BID; BY-PASS PUMPING FACILITIES, PUMPS, FITTINGS, LABOR, ETC, AS NECESSARY, BASED ON METHOD AND SEQUENCE OF CONSTRUCTION TO COMPLETE ALL WORK WHILE MAINTAINING THE EXISTING WASTEWATER TREATMENT PLANT OPERATIONS AT ALL TIMES.

10. ALL PROPOSED WORK SHALL BE COORDINATED WITH WASTEWATER TREATMENT PLANT PERSONNEL AND MANATEE COUNTY UTILITIES DEPARTMENT AT LEAST TWO WEEKS IN ADVANCE OF PROPOSED CONSTRUCTION.

11. THE CONTRACTOR SHALL FURNISH SHOP DRAWINGS TO THE ENGINEER FOR APPROVAL OF ALL PIPE CONNECTIONS, TRANSITIONS, AND SPECIALS PRIOR TO FABRICATION OR DELIVERY TO THE JOB SITE.

12. CONNECTIONS TO EXISTING FACILITIES SHALL BE ACCOMPLISHED IN A NEAT WORKMANLIKE MANNER. WHEN FIELD CONDITIONS INDICATE ANY VARIANCE FROM DETAILED METHODS, THE CONTRACTOR SHALL PROVIDE COMPREHENSIVE AND DETAILED DRAWINGS FOR OWNER REVIEW AND APPROVAL PRIOR TO MAKING THE CONNECTIONS.

13. UNLESS OTHERWISE INDICATED OR APPROVED, ALL BELOW GROUND DUCTILE IRON PIPE SHALL HAVE PUSH-ON OR MECHANICAL JOINTS, AND ALL ABOVE GROUND DUCTILE IRON PIPE SHALL HAVE FLANGED JOINTS. ALL JOINTS SHALL BE FULLY RESTRAINED.

14. ALL PIPELINES SHALL HAVE A MINIMUM COVER OF 36" BELOW EXISTING GRADE UNLESS OTHERWISE NOTED OR DIRECTED.

15. WATER SHALL NOT BE PERMITTED IN EXCAVATIONS AND TRENCHES DURING CONSTRUCTION. DEWATERING IS REQUIRED TO A MINIMUM OF 18" BELOW BOTTOM OF EXCAVATION.

16. THE CONTRACTOR SHALL NOT ALLOW ANY DISCHARGE OF WASTEWATER TO LANDS AND/OR ADJACENT WATER BODIES OR STORM DRAINS. ANY LEAKAGE MUST BE CONTAINED AND TRANSFERRED BY THE CONTRACTOR TO THE PLANT DRAIN PUMP STATION AT THE WASTEWATER TREATMENT PLANT.

17. ALL BELOW-GRADE FITTINGS SHALL BE MECHANICAL JOINT DUCTILE IRON WITH FACTORY APPLIED, FUSION BONDED POLYETHYLENE LINING FOR ALL PIPE 4-INCHES AND GREATER IN DIAMETER.

18. ALL EXPOSED PIPING SHALL BE PAINTED WITH DESIGNATED COLORS ASSOCIATED WITH THEIR USAGE AS PROVIDED IN THE SPECIFICATIONS.

19. ALL NEW PIPELINES SHALL BE FLUSHED, PRESSURE TESTED, AND APPROVED PRIOR TO TIE-INS TO EXISTING FACILITIES. THE CONTRACTOR WILL BE ALLOWED TO USE TEMPORARY PLUGS FOR PRESSURE TESTING.

20. ALL CONCRETE THRUST BLOCKS INSTALLED FOR TESTING PURPOSES AND NOT REQUIRED FOR THE PIPELINE SHALL BE REMOVED AND DISPOSED OF BY THE CONTRACTOR PRIOR TO FINAL ACCEPTANCE.

21. CONTRACTOR SHALL MAINTAIN A CLEAR PATH FOR ALL SURFACE WATER DRAINAGE STRUCTURES AND DITCHES DURING ALL PHASES OF CONSTRUCTION.THE CONTRACTOR SHALL BE REQUIRED TO INSTALL ALL EROSION, SEDIMENT AND TURBIDITY CONTROL MEASURES PRIOR TO CONSTRUCTION OF ANY COMPONENTS ASSOCIATED WITH THE PROJECT. SEDIMENT CONTROL INCLUDES SILT DAMS, TRAPS, EROSION PROTECTION, AND ANY OTHER APPURTENANCES NEEDED BUT NOT NECESSARILY SHOWN ON THESE DRAWINGS.

22. CONTRACTOR SHALL PROVIDE PROTECTIVE MATTING, FUEL CONTAINMENT AND ALL OTHER MATERIALS, EQUIPMENT AND LABOR TO PROTECT THE STAGING AREA DURING CONSTRUCTION.

23. CONTRACTOR SHALL, PRIOR TO BEGINNING CONSTRUCTION, SUBMIT A "FUELING SPILL PREVENTION PLAN" THAT SHALL CLEARLY INDICATE HOW FUEL SPILLS WILL BE PREVENTED WHEN FUELING BOTH WITHIN AND OUTSIDE OF THE STAGING AREA.

24. CONTRACTOR SHALL SUBMIT A DEWATERING PLAN FOR APPROVAL PRIOR TO BEGINNING CONSTRUCTION. DEWATERING SHALL BE CONDUCTED IN ACCORDANCE WITH THE BMPS IDENTIFIED IN CHAPTER 4, 4.40 "DEWATERING" OF "THE FLORIDA STORMWATER EROSION AND SEDIMENTATION CONTROL INSPECTOR'S MANUAL".

25. CONTRACTOR SHALL COORDINATE WORK SUCH THAT THE PLANT SHALL STAY IN OPERATION AT ALL TIMES.

26. LINE INACTIVIATIONS SHALL BE CONCLUDED AT OFF PEAK TIMES AS DICTATED BY PLANT OPERATIONS STAFF.

27. CONTRACTOR SHALL EMPLOY A PROFESSIONAL SURVEYOR, LICENSED IN THE STATE OF FLORIDA TO PERFORM CONSTRUCTION STAKING IN ACCORDANCE WITH RULE 61G17-6.004(3) OF THE FLORIDA ADMINISTRATIVE CODE.

UTILITY NOTES

1. THE CONTRACTOR SHALL BE RESPONSIBLE FOR COORDINATING WITH THE FOLLOWING JURISDICTIONAL BODIES AND UTILITY COMPANIES:

INVESTIGATE BEFORE YOU EXCAVATE
CALL LOCAL PUBLIC UTILITY NOTIFICATION CENTER
TOLL FREE 1-800-432-4770
MIN. 48 HOURS BEFORE YOU EXCAVATE

MANATEE COUNTY
TRANSPORTATION DEP.
ALLEN BRENTLEY
2904 12TH STREET COURT E.
BRADENTON, FL 34208
(941) 708-7509

MANATEE COUNTY
UTILITIES OPERATIONS
KATHY McMAHON
4422-C 66TH STREET W.
BRADENTON, FL 34210

VERIZON FLORIDA, INC.
DON DURDEN
1701 RINGLING BLVD.
SARASOTA, FL 34236
(941) 952-5616

PARAGON CABLE -
BRIGHTHOUSE NETWORK, LLC
WALTER KROL
5413 S.R. 64 E.
BRADENTON, FL 34208
(941) 748-3816 Ext. 24053

FLORIDA POWER AND LIGHT
LARRY RUSSO
125 12TH AVENUE EAST
BRADENTON, FL 34208
(941) 723-4424

TECO/PEOPLES GAS
TED FELEGY
8261 VICO CT.
SARASOTA, FL 34240
(941) 342-4026

2. ALL UTILITY CONSTRUCTION SHALL BE IN CONFORMANCE WITH THE LATEST VERSION OF THE MANATEE COUNTY UTILITY STANDARDS.

3. ALL BELOW GROUND DUCTILE IRON PIPE SHALL BE ENCASED IN A POLYETHYLENE WRAP IN ACCORDANCE WITH AWWA STANDARDS.

4. ALL VALVE BOX COVERS SHALL BE PAINTED TO INDICATE THEIR TYPE OF SERVICE.

5. ALL TEST POINT TAPPING SHALL BE CUT LOOSE FROM THE CORPORATION STOP AND COMPLETELY REMOVED AND DISPOSED OF BY THE CONTRACTOR PRIOR TO FINAL ACCEPTANCE. THE CORPORATION STOP SHALL BE CAPPED AND REMAIN IN PLACE.

RESTORATION AND MISCELLANEOUS NOTES

1. THE CONTRACTOR SHALL PROVIDE AN ASPHALT PATCH FOR TRENCH AREAS CONSTRUCTED IN EXISTING ROADWAYS. ADJUST ALL CASTINGS TO MATCH NEW PAVEMENT SURFACE.

2. THE CONTRACTOR SHALL REPLACE ALL EXISTING PAVING, STABILIZED EARTH, CURBS, SIDEWALKS, FENCES, LANDSCAPING AND OTHER IMPROVEMENTS WITH THE SAME OR BETTER TYPE OF MATERIAL THAT WAS REMOVED DURING CONSTRUCTION OR AS DIRECTED BY THE ENGINEER.

3. ALL RESTORATION WORK PERFORMED THROUGHOUT THE PROJECT SHALL CONFORM TO EXISTING LINES AND GRADES UNLESS OTHERWISE NOTED.

4. ALL EXISTING FENCES DISTURBED DURING CONSTRUCTION SHALL BE REPLACED AND REINSTALLED BY THE CONTRACTOR AT NO ADDITIONAL COST TO THE OWNER UNLESS SHOWN TO BE REMOVED ON CONSTRUCTION PLANS.

5. LIMITS OF PROPOSED ROADWAY OVERLAY SHOWN ARE APPROXIMATE. CONTRACTOR SHALL OVERLAY ALL DISTURBED AREAS OF ACCESS ROAD AS PART OF THIS PROJECT.

6. CONTRACTOR SHALL RESTORE ALL IRRIGATION SYSTEM COMPONENTS TO PRE-CONSTRUCTION CONDITIONS.

7. THE CONTRACTOR SHALL RAISE EXISTING MANHOLE FRAMES AND COVERS TO MATCH FINAL GRADE.

8. CONTRACTOR SHALL RESTORE GRADE TO PRECONSTRUCTION ELEVATIONS UNLESS OTHERWISE NOTED.

SIDEWALK NOTES

1. ALL SIDEWALKS SHALL BE CONSTRUCTED WITH 4 INCH THICK 3000 PSI CLASS I CONCRETE REINFORCED WITH 6X6 NO. 10 MESH.

2. SIDEWALKS SHALL BE CONSTRUCTED TO THE SPECIFICATIONS OF THE MANATEE COUNTY DEVELOPMENT STANDARDS AND A MINIMUM OF FIVE (5) FEET WIDE.

3. THE CONCRETE SHALL BE GIVEN A BROOM FINISH. THE SURFACE VARIATIONS SHALL NOT BE MORE THAN 1/2 INCH UNDER A TEN-FOOT STRAIGHTEDGE, NOR MORE THAN 1/8 INCH ON A FIVE-FOOT TRAVERSE SECTION. THE EDGE OF THE SIDEWALK SHALL BE CAREFULLY FINISHED WITH AN EDGING TOOL HAVING A RADIUS OF 1/2 INCH.

4. EXPANSION JOINT: EXPANSION JOINTS BETWEEN THE SIDEWALK AND DRIVEWAYS OR AT FIXED OBJECTS AND SIDEWALK INTERSECTIONS SHALL BE 1/2 INCH JOINTS.

5. CONTRACTION JOINTS: FIXED OPEN-TYPE CONTRACTION JOINTS SHALL BE FORMED BY STAKING A METAL BULKHEAD IN PLACE AND DEPOSITING THE CONCRETE ON BOTH SIDES. AFTER THE CONCRETE HAS SET SUFFICIENTLY TO PRESERVE THE WIDTH AND SHAPE OF THE JOINT, THE BULKHEAD SHALL BE REMOVED. AFTER THE SIDEWALK HAS BEEN FINISHED OVER THE JOINT, THE SLOT SHALL BE EDGED WITH A TOOL HAVING A 1/2 INCH RADIUS. SAWED JOINTS: A SLOT APPROXIMATELY 3/16 INCH WIDE AND NOT LESS THAN 1-1/2 INCHES DEEP SHALL BE CUT WITH A CONCRETE SAW AFTER THE CONCRETE HAS SET.

INDEX OF DRAWINGS

GENERAL

	COVER
G-1	GENERAL NOTES AND SHEET INDEX
G-2	ABBREVIATIONS, SYMBOLS AND LEGENDS
G-3	PROPOSED SITE PLAN

MECHANICAL

M-1	MECHANICAL DETAILS 1
M-2	MECHANICAL DETAILS 2
M-3	MECHANICAL DETAILS 3
M-4	EROSION CONTROL AND MECHANICAL DETAILS 4

INSTRUMENTATION AND CONTROLS

I-1	PROCESS AND INSTRUMENTATION GENERAL NOTES, LEGEND AND ABBREVIATIONS
I-2	PROCESS SCHEMATIC
I-3	PROCESS AND INSTRUMENTATION DIAGRAM SHEET 1
I-4	PROCESS AND INSTRUMENTATION DIAGRAM SHEET 2
I-5	PROCESS AND INSTRUMENTATION DIAGRAM SHEET 3
I-6	PROCESS AND INSTRUMENTATION DIAGRAM SHEET 4
I-7	PROCESS AND INSTRUMENTATION DIAGRAM SHEET 5
I-8	PROCESS AND INSTRUMENTATION DETAILS
I-9	COMMUNICATIONS SYSTEM OVERVIEW
I-10	EXISTING SCADA PANEL SP-1 DRAWINGS FOR VFD ANALOG INPUT AND ANALOG OUTPUT CONNECTIONS
I-11	EXISTING SCADA PANEL SP-1 DRAWINGS FOR VFD DISCRETE INPUT AND DISCRETE OUTPUT CONNECTIONS

ELECTRICAL

E-1	ELECTRICAL GENERAL NOTES, LEGENDS AND ABBREVIATIONS
E-2	ELECTRICAL SITE LAYOUT
E-3	RTU NO. 3 & NO. 4 SINGLE LINE DIAGRAM
E-4	RTU NO. 5 SINGLE LINE DIAGRAM
E-5	MAIN ELECTRICAL BUILDING SINGLE LINE DIAGRAM MODIFICATIONS
E-6	MCC / BLOWER BUILDING NO. 3 SINGLE LINE DIAGRAM MODIFICATIONS
E-7	ELECTRICAL DETAILS 1
E-8	ELECTRICAL DETAILS 2
E-9	ELECTRICAL DETAILS 3
E-10	EXISTING SINGLE LINE DIAGRAM MODIFICATIONS 1
E-11	EXISTING SINGLE LINE DIAGRAM MODIFICATIONS 2

REV.NO.	DESCRIPTIONS	DATE

REVISIONS

SEAL

MATTHEW S. LOVE, P.E.
No. 66118

SEAL

McKIM&CREED
1365 Hamlet Avenue
Clearwater, Florida 33756
Phone: (727)442-7196, Fax: (727)461-3827
EB0006691
www.mckimcreed.com

MANATEE COUNTY, FLORIDA

SEWRF RECLAIMED WATER AUTOMATION

GENERAL NOTES AND SHEET INDEX

DATE:	AUGUST 2010
MCE PROJ. #	1024-0129
DRAWN	QES
DESIGNED	MSL
CHECKED	JSL
PROJ. MGR.	MSL

SCALE
HORIZONTAL: AS SHOWN
VERTICAL: NA

DRAWING NUMBER
G-1

STATUS: ISSUE FOR BID
REVISION

S:\1024\01290\05-Drawings\General\G-1-Gen Notes-1024-0129.dwg, 8/23/2010 1:17:45 PM, Brian Naught

GENERAL ABBREVIATIONS

@.	AT
ABW	AUTOMATIC BACKWASH
A/C	AIR CONDITIONER UNIT
AC	ACRES
AC	ASPALTIC CONCRETE
ABD	ABANDONED
AL./ALUM.	ALUMINUM
ANCH.	ANCHOR
APPROX.	APPROXIMATE
BLDG.	BIULDING
BM.	BEAM
BOT./BOTT.	BOTTOM
(C)	CALCULATED DATA
C	CHANNEL
C.	CONDUIT
C.B.	CATCH BASIN
CCR	CERTIFIED CORNER RECORD
CHKR	CHECKERED
CIR.	CIRCLE
CLF	CHAIN LINK FENCE
℄	CENTERLINE
CMP	CORRUGATED METAL PIPE
COL.	COLUMN
CONN.	CONNECTOR/CONNECTION
CONC.	CONCRETE
COR	CORNER
CPB	CONDOMINIUM PLAT BOOK
C/T	CURB TIE
CU.	COPPER
(D)	DEED DATA
D.	DEEP/DRAIN
DB	DEED BOOK
DBL.	DOUBLE
DHW.	DESIGN HIGH WATER
DISCH.	DISCHARGE
DN.	DOWN
DRWY	DRIVEWAY
E.W.	EACH WAY
EA.	EACH
ECMP	ELLIPTICAL CORRUGATED METAL PIPE
EL./ELEV.	ELEVATION
ELEC.	ELECTRICAL CONDUIT
EP	EDGE OF PAVEMENT
ERCP	ELLIPTICAL REINFORCED CONCRETE PIPE
ETC.	AND SO FORTH
EXIST.	EXISTING
EXP.	EXPANSION
(F)	FIELD DATA
FCM	FOUND CONCRETE MONUMENT
FDOT	FLORIDA DEPARTMENT OF TRANSPORTATION
FF	FINISHED FLOOR
FIR	FOUND IRON ROD
FND	FOUND NAIL & DISC
FOP	FOUND OPEN PIPE
FPP	FOUND PINCHED PIPE
FRRS	FOUND RAILROAD SPIKE
F/T	FENCE TIE
FT.	FOOT
FTG.	FOOTING
FXC	FOUND X-CUT
GALV.	GALVANIZED
GDRL	GUARDRAIL
GE	GRATE ELEVATION
GEN	GENERATOR
GI	GRATED INLET
GPM	GALLONS PER MINUTE
GRTG.	GRATING
G.S.	GALVANIZED STEEL
GR./GRD.	GRADE
GWP	GUY WIRE POLE
HDWALL	HEADWALL
H.R.	HANDRAIL
HWL	HIGH WATER LEVEL
IE	INVERT ELEVATION
IN.	INCH
INV.	INVERT
IP	IRON PIPE
IR	IRON ROD
J.B.	JUNCTION BOX
JT.	JOINT
(L)	LEGAL DESCRIPTION DATA
LB	LICENSED BUSINESS
LG.	LONG
LN.	LANE
LP	LIGHT POLE
LS	LICENSED SURVEYOR
MAS	MASONRY
MAX.	MAXIMUM
MCC	MOTOR CONTROL CENTER
MES	MITERED END SECTION
MG	MILLION GALLONS
MES	MILLION GALLONS PER DAY
MHW	MEAN HIGH WATER
MON.	MONUMENT
NG	NATURAL GROUND
N.T.S.	NOT TO SCALE
NO.	NUMBER
NP	NORMAL POOL
ø	DIAMETER/PHASE
O/A	OVERALL
OPNG.	OPENING
OR	OFFICIAL RECORDS BOOK
(P)	PLAT BOOK
PCCP	PRE-STRESSED CONCRETE PIPE
PG	PAGE
PLCS.	PLACES
PLS	PROFESSIONAL LAND SURVEYOR
POB	POINT OF BEGINNING
POC	POINT OF COMMENCEMENT
POT	POTABLE
PP	POWER POLE
PRM	PERMANENT REFERENCE MONUMENT
PROP.	PROPOSED
PSM	PROFESSIONAL SURVEYOR & MAPPER
P/T	PAVEMENT TIE
P.V.	PLUG VALVE
PVMT	PAVEMENT
R.	RADIUS/RISER/RELAY
RCP	REINFORCED CONCRETE PIPE
REF.	REFERENCED
REINF.	REINFORCED/REINFORCING
REQ'D	REQUIRED
RESTR.	RESTRAINED
RLS	REGISTERED LAND SURVEYOR
RW;R/W	RIGHT-OF-WAY
SAN.	SANITARY
SEC.	SECTION
SGL	SINGLE
SHW	SEASONAL HIGH WATER
SIR	SET IRON ROD $\frac{1}{2}$" LB 6113
SND	SET NAIL & DISC LB 6113
SPRK	SPRINKLER
SQ.	SQUARE
SN.	SIGN
SR	STATE ROAD
SSMH	SANITARY SEWER MANHOLE
S/T	SIDEWALK TIE
STL.	STEEL
STY	STORY
S/W;SWK	SIDEWALK
SYM.	SYMBOL
TBM	TEMPORARY BENCH MARK
TOB	TOP OF BANK
T.&B.	TOP & BOTTOM
TEL	TELEPHONE
TEMP.	TEMPORARY
THK	THICK
TOS	TOE OF SLOPE
TYP.	TYPICAL
UG	UNDERGROUND GAS
UP	UTILITY POLE
UT	UNDERGROUND TELEPHONE
VCP	VITRIFIED CLAY PIPE
VERT.	VERTICAL
W	WIDE FLANGE/WIDE/WATT
W/	WITH
WF	WOOD FENCE
W/L	WATER LINE
W.L.	WATER LEVEL
W/M	WATER MAIN
W.M.	WATER METER
W.P.	WEATHER PROOF
W.S.	WALL SLEEVE/WATER STOP/WATER SERVICE
W/T	WALL TIE
WTR.	WATER

FLOW ABBREVIATIONS

AL	ALUM SOLUTION
AB	AERATION BASIN
AD	AEROBIC DIGESTER
AX	ANOXIC BASIN
BA	BLOWER AIR
BP	BYPASS
BW	BACKWASH
CA	COMPRESSED AIR
CCC	CHLORINE CONTACT CHAMBER
CCE	CHLORINATED EFFLUENT
CF	CLOTH FILTER
CLE	CLARIFIER EFFLUENT
CLG	CHLORINE GAS
CLS/CL2S	CHLORINE SOLUTION
D/DR	DRAIN
DAF	DISSOLVED AIR FLOTATION
DF	NEW CLOTH FILTER
DS	DEWATERED SLUDGE
EFF	EFFLUENT
EXP	EXPANSION
FBW	FILTER BACKWASH
FC	FINAL CLARIFIER
FE	FILTER EFFLUENT
FLE	FILTERED LAKE EFFLUENT
FLW	FLOCCULATED WATER
FM	FLOW METER
FW	FILTERED WATER
GBT	GRAVITY BELT THICKENER
GR	GRIT
HDW	HEADWORKS
INF	INFLUENT
IR	INTERNAL RECYCLE
HSBFP	HIGH SOLIDS BELT FITER PRESS
ML	MIXED LIQUOR
OF	OVERFLOW
P	POLYMER
PD	PLANT DRAIN
PDFM	PLANT DRAIN FORCE MAIN
PS	PUMP STATION
PW	POTABLE WATER
RAS	RETURNED ACTIVATED SLUDGE
RCW	RECLAIMED WATER
REJ	REJECT
RML	RECIRCULATED MIXED LIQUOR
RW	REUSE WATER
SAM	SAMPLE
SB	SPLITTER BOX
SC	SCUM
SDR	STORMWATER DRAINAGE
SL	SAMPLE LINE
SS	SANITARY SEWER
TS	THICKENED SLUDGE
WAS	WASTE ACTIVATED SLUDGE
WBW	WASTE BACKWASH WATER
WW	WASTEWATER

PIPING ABBREVIATIONS

ARV	AIR RELEASE VALVE
ABD	ABANDONED
BFV	BUTTERFLY VALVE
BV	BALL VALVE
CB	CATCH BASIN
CO	CLEANOUT
CORP	CORPORATION
CV	CHECK VALVE
D.I.	DUCTILE IRON
DIA	DIAMETER
D.I.P.	DUCTILE IRON PIPE
ELEC.	ELECTRICAL
EXIST.	EXISTING
FHA	FIRE HYDRANT ASSEMBLY
FL	FLANGED
GS	GALVANIZED STEEL
GV	GATE VALVE
HB	HOSE BIBB
HDPE	HIGH DENSITY POLYETHYLENE
MH	MANHOLE
MJ	MECHANICAL JOINT
PE	PLAIN END
PS	PUMP STATION
PV	PLUG VALVE
PVC	POLYVINYLCHLORIDE
RED.	REDUCER
SCH	SCHECULE
SDR.	DIAMETER RATIO
SS.	STAINLESS STEEL
TBR	TO BE REMOVED
UE	UNDERGROUND ELECTRIC
VERT.	VERTICAL
WM	WATER METER

LEGEND

EXISTING		PROPOSED
	PIPE 12" OR LARGER (ABOVE GROUND)	
	PIPE 12" OR LARGER (UNDERGROUND)	
	PIPE SMALLER THAN 12" (ABOVE GROUND)	
	PIPE SMALLER THAN 12" (UNDERGROUND)	
	GATE VALVE	
	BUTTERFLY VALVE	
	BALL VALVE	
	PLUG VALVE	
	REDUCER	
	MANHOLE	M.H.
C.B.	CATCH BASIN	C.B.
	TOP OR TOE OF BANK	
	PIPING, STRUCTURES OR EQUIPMENT TO BE REMOVED	
25	CONTOURS	26

PIPE IDENTIFICATION

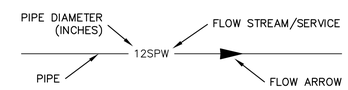

SECTION DESIGNATION

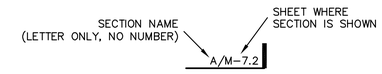

REV.NO.	DESCRIPTIONS	DATE

REVISIONS

SEAL

MATTHEW S. LOVE, P.E.
No. 66118

SEAL

McKIM&CREED
1365 Hamlet Avenue
Clearwater, Florida 33756
Phone: (727)442-7196, Fax: (727)461-3827
EB0006691
www.mckimcreed.com

MANATEE COUNTY, FLORIDA

SEWRF RECLAIMED WATER AUTOMATION

ABBREVIATIONS, SYMBOLS AND LEGENDS

DATE:	AUGUST 2010
MCE PROJ. #	1024-0129
DRAWN	QES
DESIGNED	MSL
CHECKED	JSL
PROJ. MGR.	MSL

SCALE
HORIZONTAL: AS SHOWN
VERTICAL: NA

DRAWING NUMBER
G-2

STATUS: ISSUE FOR BID
REVISION

S:\1024\0129\05-Drawings\General\G-2-Abbrev-Legend-1024-0129.dwg, 8/23/2010 1:19:11 PM, Brian Naught

NOTES:

1. ALL NEW PIPE, FITTINGS, VALVES AND APPURTENANCES SHALL BE FULLY RESTRAINED.
2. CONTRACTOR SHALL CONDUCT SUBSURFACE INVESTIGATION TO DETERMINE EXACT LOCATION OF EXISTING PIPING.
3. CONTRACTOR SHALL COORDINATE FINAL PLACEMENT OF 16" METER ASSEMBLIES FOR FLW-120 AND FLW-114 WITH COUNTY AND ENGINEER UPON CONDUCTING SUBSURFACE INVESTIGATION.

REV.NO.	DESCRIPTIONS	DATE
	REVISIONS	

SEAL

MATTHEW S. LOVE, P.E.
No. 66118

SEAL

McKIM&CREED
1365 Hamlet Avenue
Clearwater, Florida 33756
Phone: (727)442-7196, Fax: (727)461-3827
EB0006691
www.mckimcreed.com

MANATEE COUNTY, FLORIDA

SEWRF RECLAIMED WATER AUTOMATION

PROPOSED SITE PLAN

DATE:	AUGUST 2010
MCE PROJ. #	1024-0129
DRAWN	QES
DESIGNED	MSL
CHECKED	JSL
PROJ. MGR.	MSL

SCALE
HORIZONTAL: AS SHOWN
VERTICAL: NA

DRAWING NUMBER
G-3

STATUS: ISSUE FOR BID
REVISION

S:\1024\01201\85-Drawings\General\G-3-Proposed Site Plan.dwg, 9/28/2010 11:48:32 AM, Brian Naught

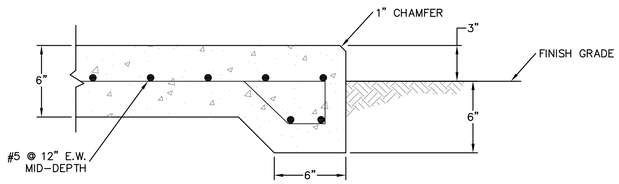

TYPICAL EQUIPMENT PAD DETAIL

NOT TO SCALE

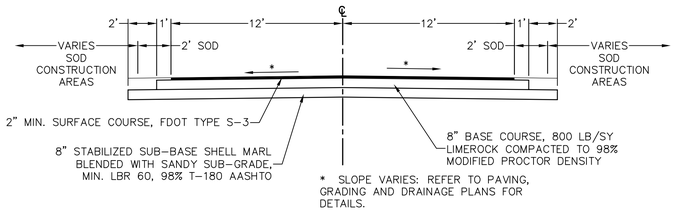

INTERIOR PLANT ROADWAY TYPICAL SECTION

NOT TO SCALE

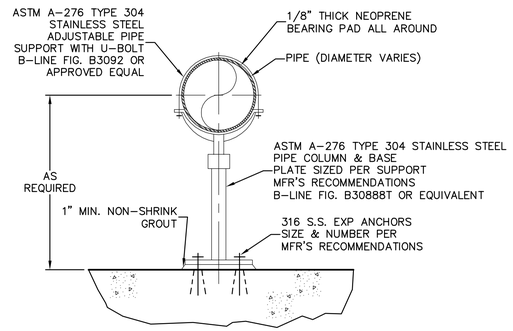

STANCHION PIPE SUPPORT

NOT TO SCALE

NOTES:

1.) USE OF TYPE A-2 AND A-3 PIPE BEDDING TO BE DETERMINED IN THE FIELD BY THE ENGINEER.
2.) 10" MAX. FOR PIPE DIAMETER LESS THAN 24"; 12" MAX. FOR PIPE DIAMETER 24" AND LESS THAN 42"; 24" MAX. FOR PIPE DIAMETER 42" AND OVER.
3.) 4" MAX. FOR PIPE 16" DIAMETER & LESS; 6" MAX. FOR PIPE 18" TO 36" DIAMETER; AND 9" MAX. FOR PIPE 42" DIAMETER AND LARGER.
4.) PIPE INSTALLATION SHALL BE IN ACCORDANCE WITH THE MANUFACTURER'S WRITTEN INSTRUCTIONS.
5.) THICKNESS TO MATCH EXISTING OR BE 6" MINIMUM, WHICHEVER IS GREATER.
6.) SHEETING ORDERED LEFT IN PLACE TO BE CUT OFF 24" BELOW FINISH GRADE OR 12" BELOW SUBGRADE.
7.) BASE SHALL BE COMPACTED 6" MINIMUM THICKNESS OF APPROVED MATERIAL.
8.) BACKFILL AASHTO M-145 SHALL BE PLACED IN LAYERS NOT TO EXCEED 6 INCHES. EACH LAYER SHALL BE THOROUGHLY TAMPED AND/OR ROLLED TO 98% AASHTO T-180 DENSITY.
9.) DRIVEWAYS SHALL BE CONSTRUCTED IN ACCORDANCE WITH THE LATEST ADOPTED CONSTRUCTION STANDARDS OF THE MANATEE COUNTY TRANSPORTATION DEPARTMENT.
10.) IF THE DRIVEWAY IS 12' OR WIDER, SAWCUT AN EXPANSION JOINT ALONG THE CENTER OF THE DRIVEWAY (5/16" WIDE AND 1 1/2" DEEP) AFTER THE CONCRETE HAS SET.
11.) IF THERE IS AN EXISTING EXPANSION JOINT WITHIN 3' OF THE PROPOSED JOINT, EXTEND DRIVEWAY REPLACEMENT TO THE EXISTING JOINT.
12.) TRACER WIRE NOT REQUIRED FOR GRAVITY SEWERS.

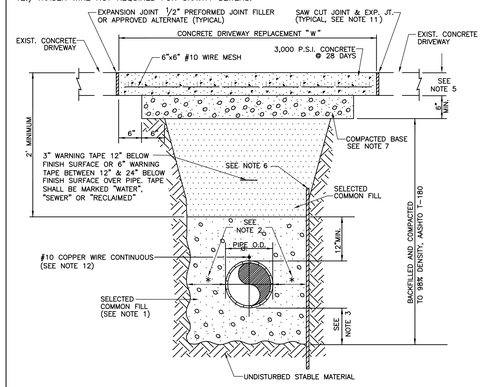

MANATEE COUNTY PUBLIC WORKS DEPARTMENT			TRENCH WITH CONCRETE DRIVEWAY SURFACE TYPE A-1 PIPE BEDDING	UG-14
REV.BY	DATE			
CLB/KE	6/05	MARCH 17, 2009		
JAA/JB	10/08	DATE OF APPROVAL		
JAA/JEA	02/09			

NOTES:

1.) USE OF TYPE A-2 AND A-3 PIPE BEDDING TO BE DETERMINED IN THE FIELD BY THE ENGINEER.
2.) 10" MAX. FOR PIPE DIAMETER LESS THAN 24"; 12" MAX. FOR PIPE DIAMETER 24" AND LESS THAN 42"; 24" MAX. FOR PIPE DIAMETER 42" AND OVER.
3.) 4" MAX. FOR PIPE 16" DIAMETER & LESS; 6" MAX. FOR PIPE 18" TO 36" DIAMETER; AND 9" MAX FOR PIPE 42" DIAMETER AND LARGER.
4.) PIPE INSTALLATION SHALL BE IN ACCORDANCE WITH THE MANUFACTURER'S WRITTEN INSTRUCTIONS.
5.) BACKFILL AASHTO M-145 SHALL BE PLACED IN LAYERS NOT TO EXCEED 6 INCHES FOR SELECTED COMMON FILL AND NOT TO EXCEED 12 INCHES FOR COMMON FILL. EACH LAYER SHALL BE THOROUGHLY TAMPED AND/OR ROLLED TO 98% AASHTO T-180 DENSITY.
6.) TRACER WIRE NOT REQUIRED FOR GRAVITY SEWERS.

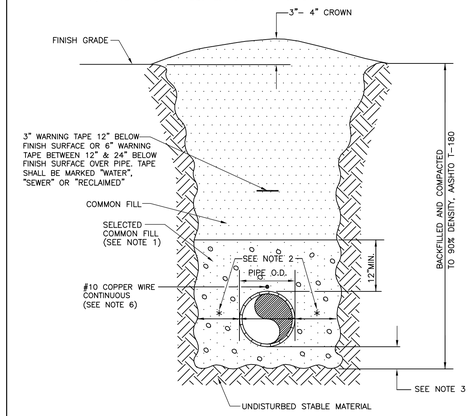

MANATEE COUNTY PUBLIC WORKS DEPARTMENT			TRENCH WITH UNIMPROVED SURFACE TYPE A-1 PIPE BEDDING	UG-11
REV.BY	DATE			
CLB/KE	02/05	MARCH 17, 2009		
JAA/JB	10/08	DATE OF APPROVAL		
JAA/JEA	02/09			

NOTES:

1.) USE OF TYPE A-2 AND A-3 PIPE BEDDING TO BE DETERMINED IN THE FIELD BY THE ENGINEER.
2.) 10" MAX. FOR PIPE DIAMETER LESS THAN 24"; 12" MAX. FOR PIPE DIAMETER 24" AND LESS THAN 42"; 24" MAX. FOR PIPE DIAMETER 42" AND OVER.
3.) 4" MAX. FOR PIPE 16" DIAMETER & LESS; 6" MAX. FOR PIPE 18" TO 36" DIAMETER; AND 9" MAX FOR PIPE 42" DIAMETER AND LARGER.
4.) PIPE INSTALLATION SHALL BE IN ACCORDANCE WITH THE MANUFACTURER'S WRITTEN INSTRUCTIONS.
5.) ASPHALTIC CONCRETE FRICTION COURSE WITH PRIME COAT SHALL BE THE SAME DEPTH AND TYPE AS EXISTING OR A MINIMUM OF ONE INCH, WHICHEVER IS GREATER.
6.) SHEETING ORDERED LEFT IN PLACE TO BE CUT OFF 24" BELOW FINISHED GRADE OR 12" BELOW SUBGRADE.
7.) BASE SHALL BE 8" MINIMUM THICKNESS CRUSHED CONCRETE. SAND ASPHALT BASE WILL BE AN ACCEPTABLE ALTERNATIVE.
8.) BACKFILL AASHTO M-145 SHALL BE PLACED IN LAYERS NOT TO EXCEED 6 INCHES. EACH LAYER SHALL BE THOROUGHLY TAMPED AND/OR ROLLED TO 98% AASHTO T-180 DENSITY.
9.) TEMPORARY PATCHES WILL BE INSTALLED TO PROVIDE A SMOOTH ALL WEATHER SURFACE AT ALL TIME. PERMANENT REPLACEMENT TO BE MADE AS SOON AS POSSIBLE.
10.) RESTORE SIGNAGE & MARKING WITH THERMOPLASTIC PER FDOT STANDARDS, LATEST EDITION.
11.) TRACER WIRE NOT REQUIRED FOR GRAVITY SEWERS.
12.) NOTES 5.) THRU 11.) ARE MINIMUM REQUIREMENTS. REFER TO MANATEE COUNTY HIGHWAY AND TRAFFIC STANDARDS FOR ADDITIONAL REQUIREMENTS.

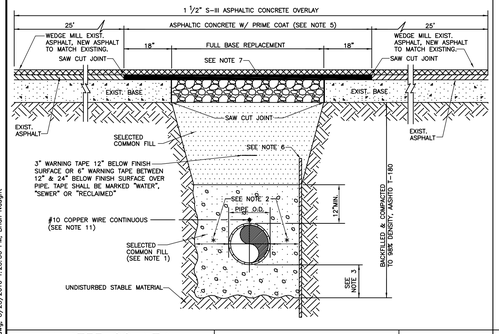

MANATEE COUNTY PUBLIC WORKS DEPARTMENT			TRENCH WITH ASPHALT PAVEMENT SURFACE TYPE A-1 PIPE BEDDING	UG-12
REV.BY	DATE			
CLB/KE	02/05	MARCH 17, 2009		
JAA/JB	10/08	DATE OF APPROVAL		
JAA/JEA	02/09			

NOTES:

1.) 10" MAX. FOR PIPE DIAMETER LESS THAN 24"; 12" MAX. FOR PIPE DIAMETER 24" AND LESS THAN 42"; 24" MAX. FOR PIPE DIAMETER 42" AND OVER.
2.) 4" MAX. FOR PIPE 16" DIAMETER AND LESS; 6" MAX. FOR PIPE DIAMETER 18" TO 36" AND 9" MAX. FOR PIPE DIAMETER 42" AND OVER.
3.) PIPE INSTALLATION SHALL BE IN ACCORDANCE WITH MANUFACTURER'S WRITTEN INSTRUCTIONS.
4.) BACKFILL AASHTO M-145 SHALL BE PLACED IN LAYERS NOT TO EXCEED 6 INCHES. EACH LAYER SHALL BE THOROUGHLY TAMPED AND/OR ROLLED TO 98% AASHTO T-180 DENSITY.
5.) TRACER WIRE NOT REQUIRED FOR GRAVITY SEWERS.

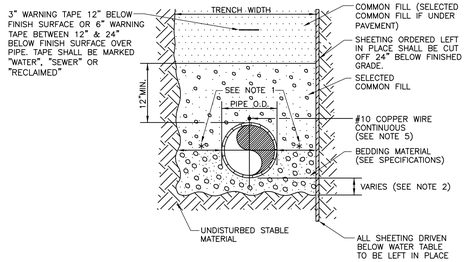

MANATEE COUNTY PUBLIC WORKS DEPARTMENT			TRENCH WITH TYPE A-2 PIPE BEDDING	UG-15
REV.BY	DATE			
CLB/KE	08/05	MARCH 17, 2009		
JAA/JB	10/08	DATE OF APPROVAL		
JAA/JEA	02/09			

THRUST BLOCK DIMENSIONS B ft. x d inches												
PIPE SIZE	90°BEND		45°BEND		22.5°BEND		11.25°BEND		DEAD END & TEE		45° WYE	
(IN.)	B	d	B	d	B	d	B	d	B	d	B	d
4	1.5	3 1/2	1.1	3 1/2	0.8	3 1/2	0.6	3 1/2	1.3	3 1/2	1.1	3 1/2
6	2.2	5 1/4	1.6	3 3/4	1.2	3 1/2	0.8	3 1/2	1.9	4 1/2	1.6	3 3/4
8	2.9	7	2.1	5	1.5	3 1/2	1.1	3 1/2	2.4	5 3/4	2.0	4 3/4
10	3.5	8 1/2	2.6	6 1/4	1.9	4 1/2	1.3	3 1/2	3.0	7 1/4	2.5	6
12	4.2	10	3.1	7 1/2	2.2	5 1/4	1.6	3 3/4	3.5	8 1/2	3.0	7 1/4
14	4.9	11 3/4	3.6	8 3/4	2.6	6 1/4	1.8	4 1/4	4.1	9 3/4	3.4	8 1/4
16	5.5	13 1/4	4.1	9 3/4	2.9	7	2.1	5	4.7	11 1/4	3.9	9 1/4
18	6.2	15	4.6	11	3.3	8	2.3	5 1/2	5.2	12 1/2	4.4	10 1/2
20	6.9	16 1/2	5.0	12	3.6	8 3/4	2.6	6 1/4	5.8	14	4.9	11 3/4
24	8.2	19 3/4	6.0	14 1/2	4.3	10 1/4	3.1	7 1/2	6.9	16 1/2	5.8	14
30	10.1	24 1/4	7.5	18	5.3	12 3/4	3.8	9	8.5	20 1/2	7.2	17 1/4
36	12.1	29	8.9	21 1/4	6.4	15 1/4	4.5	10 3/4	10.2	24 1/2	8.6	20 3/4

REINFORCEMENT MAT SCHEDULE

FOR DIM."B"BETWEEN 5.75' & 12.5' USE #4 @ 8" EACH WAY
FOR DIM."B"LESS THAN 5.75' USE #3 @ 8" EACH WAY

NOTES:

1. ALL THRUST BLOCKS SHALL BE CAST IN PLACE. FITTINGS ADJACENT TO THRUST BLOCKS SHALL BE WRAPPED IN POLYETHYLENE.
2. THIS TABLE IS BASED ON WATER PRESSURE=180 PSI WITH AN ALLOWABLE SOIL BEARING PRESSURE=2000 PSF, CONCRETE STRENGTH f_c=3000 PSI, REINFORCEMENT f_y=60.0 KSI.THRUST BLOCK SHALL BE CAST AGAINST FIRM UNDISTURBED SOIL.
3. FOR LARGER"B"DIMENSIONS IT IS NECESSARY TO CHECK THAT PIPE IS SUFFICIENTLY DEEP TO ALLOW 15" MIN. SOIL COVER OVER TOP EDGE OF THRUST BLOCK.
4. RESTRAINED JOINTS SHALL BE USED IN LIEU OF THRUST BLOCKS TO SAVE SPACE. THRUST BLOCKS SHALL BE USED IN SITUATIONS WHERE THRUST BLOCKS AND RESTRAINED JOINTS ARE BOTH REQUIRED.

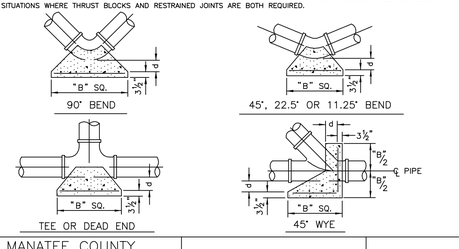

MANATEE COUNTY PUBLIC WORKS DEPARTMENT			CONCRETE THRUST BLOCKS	UG-7
REV.BY	DATE			
CLB/KE	2/05	MARCH 17, 2009		
JAA/JB	2/09	DATE OF APPROVAL		

SERVICE

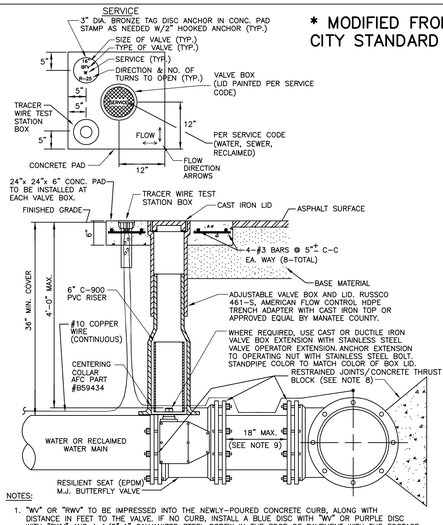

* MODIFIED FROM CITY STANDARD

NOTES:

1. "WV" OR "RWV" TO BE IMPRESSED INTO THE NEWLY-POURED CONCRETE CURB, ALONG WITH DISTANCE IN FEET TO THE VALVE. IF NO CURB, INSTALL A BLUE DISC WITH "WV" OR PURPLE DISC WITH "RWV" AND A 1/8"x1" GALVANIZED STEEL SCREW IN THE EDGE OF PAVEMENT WITH THE FOOTAGE FROM THE DISC TO THE VALVE.
2. ALL EXISTING AND PROPOSED VALVE BOXES SHALL BE ADJUSTED TO FINISHED GRADES AS DETERMINED IN THE FIELD.
3. WATER VALVES SHALL NOT BE PLACED IN HANDICAPPED RAMPS.
4. PRECAST CONCRETE PADS & THRUST BLOCKS SHALL NOT BE USED.
5. ALL EXPOSED EDGES OF CONCRETE SHALL BE CHAMFERED 1/2".
6. FOR VALVES 16" AND LARGER, USE BUTTERFLY VALVES.
7. "FLOW" AND FLOW DIRECTION ARROWS TO BE IMPRESSED INTO NEWLY POURED CONCRETE PAD.
8. CONCRETE THRUST BLOCK IS ALSO REQUIRED UNLESS RESTRAINED JOINT LENGTH IS TREATED AS A PLUG SHOWN IN STANDARD DETAIL UG-8
9. SHOULD THERE BE AN OBSTACLE/CONFLICT IN INSTALLING THE VALVE, THE ENGINEER OF RECORD MAY PROPOSE A REVERSE TAP, ETC. AND SEPARATE APPROVAL SHALL BE OBTAINED FROM MANATEE COUNTY.

MANATEE COUNTY PUBLIC WORKS DEPARTMENT			BUTTERFLY VALVE, BOX, LID AND TAG	UW-3
REV.BY	DATE			
CLB/KE	08/05	MARCH 17, 2009		
JAA/JB	10/08	DATE OF APPROVAL		
JAA/JEA	02/09			

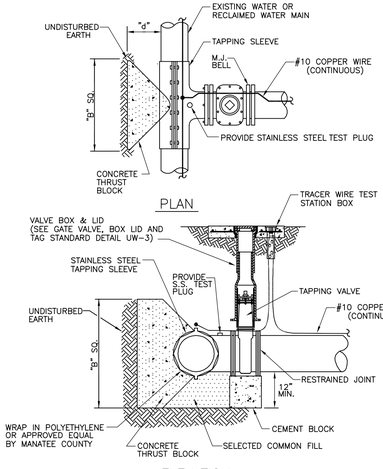

NOTES:

1. NO CUTS SHALL BE MADE BEFORE:
   (A) A 60 MINUTE TEST OF 180 PSI FOR WATER OR 150 PSI FOR SEWER IS MADE.
   (B) ALL FITTINGS TO BE WRAPPED WITH 20 MIL VISQUEEN AT THRUST BLOCK.
   (C) ALL TAPS ON CONCRETE WATER MAINS AND LARGER THAN 12" ARE TO BE MADE BY A MANATEE COUNTY APPROVED TAPPING COMPANY. ALL MATERIALS TO BE SUPPLIED BY THE CONTRACTOR.
2. ALL TAPS MUST BE OF A SMALLER SIZE THAN THE MAIN BEING TAPPED & PLACED NO CLOSER THAN 30" OR A DISTANCE EQUAL TO (1) MAIN PIPE DIAMETER PLUS (2) TAP PIPE DIAMETERS (WHICHEVER IS LARGER) FROM A JOINT OR FITTING.
3. CONTRACTOR TO SUPPLY A DRY HOLE FOR TAPPING CREW TO WORK IN AND A BACK-HOE TO LOWER TAPPING MACHINE INTO THE HOLE.
4. THRUST BLOCK IS REQUIRED AND INCLUDED IN EVERY TAP. SEE CONCRETE THRUST BLOCK DETAIL FOR DIMENSIONS "B" & "d".
5. TRACER WIRE TEST STATION BOX IS REQUIRED AT CONNECTIONS TO EXISTING MAINS.

MANATEE COUNTY PUBLIC WORKS DEPARTMENT			TAPPING SLEEVE AND VALVE	UW-4
REV.BY	DATE			
CLB/KE	08/05	MARCH 17, 2009		
JAA/JB	10/08	DATE OF APPROVAL		
JAA/JEA	02/09			

REV.NO.	DESCRIPTIONS	DATE
	REVISIONS	

SEAL

MATTHEW S. LOVE, P.E.
No. 66118

SEAL

McKIM&CREED
1365 Hamlet Avenue
Clearwater, Florida 33756
Phone: (727)442-7196, Fax: (727)461-3827
EB0006691
www.mckimcreed.com

MANATEE COUNTY, FLORIDA

SEWRF RECLAIMED WATER AUTOMATION

MECHANICAL DETAILS 1

DATE:	AUGUST 2010
MCE PROJ. #	1024-0129
DRAWN	QES
DESIGNED	MSL
CHECKED	JSL
PROJ. MGR.	MSL

SCALE
HORIZONTAL: NA
VERTICAL: NA

DRAWING NUMBER
M-1

STATUS: ISSUE FOR BID
REVISION

S:\1024\01291\05-Drawings\Mechanical\M-1 DETAILS-1024(01291.dwg, 8/23/2010 1:23:50 PM, Brian Naugle)

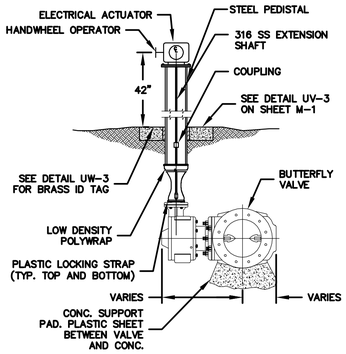

MOTOR OPERATOR INSTALLATION ON NEW BUTTERFLY VALVE

NTS (MOV-100, MOV-102, MOV-115, MOV-116)

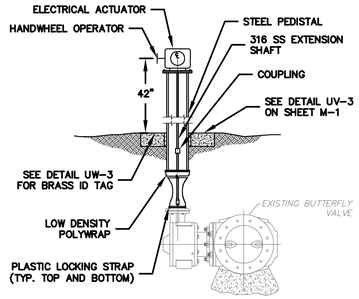

MOTOR OPERATOR INSTALLATION ON EXISTING BURIED BUTTERFLY VALVE

NTS (MOV-100, MOV-101, MOV-104, MOV-105)

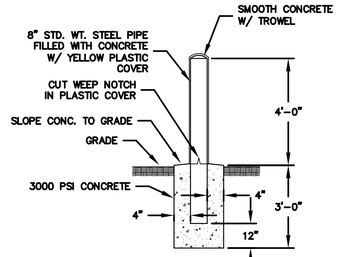

BOLLARD DETAIL

NOT TO SCALE

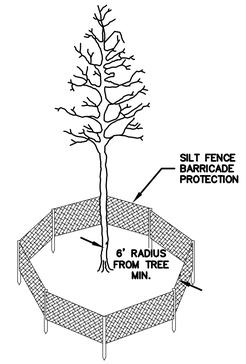

TREE PROTECTION DETAIL

NOT TO SCALE

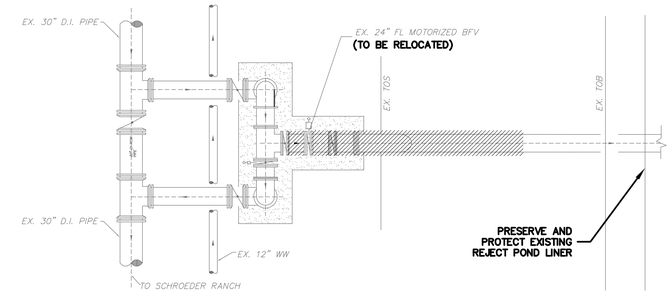

REJECT POND DEMO PLAN

NTS

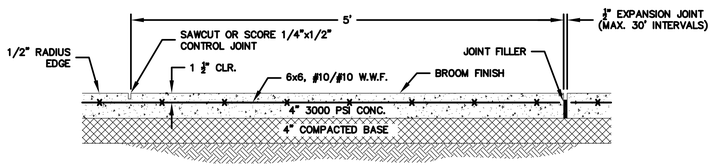

TYPICAL SIDEWALK DETAIL

NOT TO SCALE

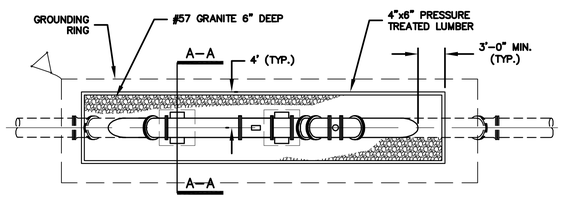

TYPICAL PLAN VIEW

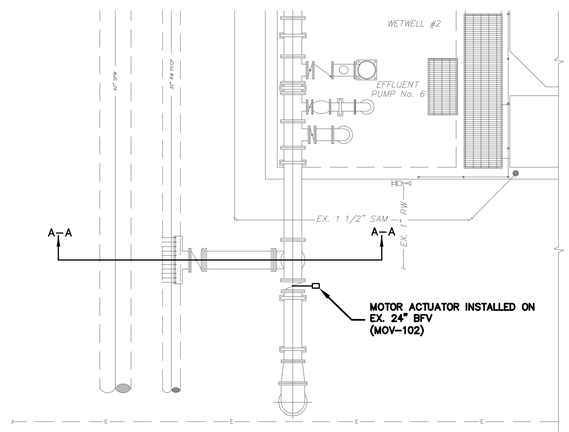

EFFLUENT PUMP STATION PLAN

1/8"=1'-0" (MOV-102)

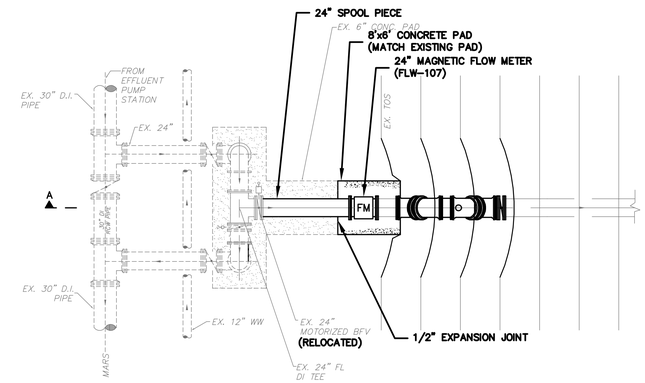

REJECT POND PLAN

NTS (FLW-107)

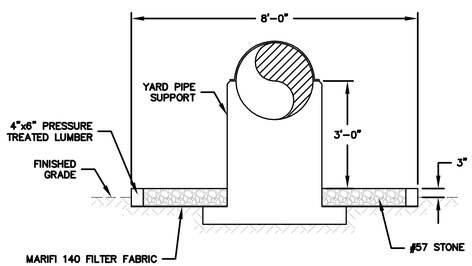

SECTION A-A

NTS

TYPICAL MIRAFI PAD DETAIL

SCALE: 1/8"=1'-0"

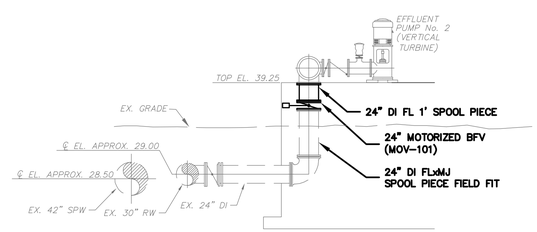

EFFLUENT PUMP STATION PIPING SECTION

1/8"=1'-0" (MOV-101)

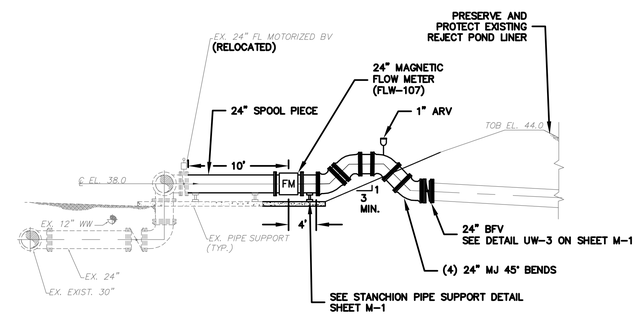

REJECT POND SECTION

NTS (FLW-107)

REV.NO.	DESCRIPTIONS	DATE

REVISIONS

SEAL

MATTHEW S. LOVE, P.E.
No. 66118

SEAL

McKIM&CREED
1365 Hamlet Avenue
Clearwater, Florida 33756
Phone: (727)442-7196, Fax: (727)461-3827
EB0006691
www.mckimcreed.com

MANATEE COUNTY, FLORIDA

SEWRF RECLAIMED WATER AUTOMATION

MECHANICAL DETAILS 2

DATE:	AUGUST 2010
MCE PROJ. #	1024-0129
DRAWN	QES
DESIGNED	MSL
CHECKED	JSL
PROJ. MGR.	MSL

SCALE
HORIZONTAL: AS SHOWN
VERTICAL: NA

DRAWING NUMBER
M-2

STATUS: ISSUE FOR BID
REVISION

S:\1024\01291\05-Drawings\Mechanical\M-2 DETAILS-1024012S.dwg, 9/7/2010 9:14:11 AM, Brian Naught

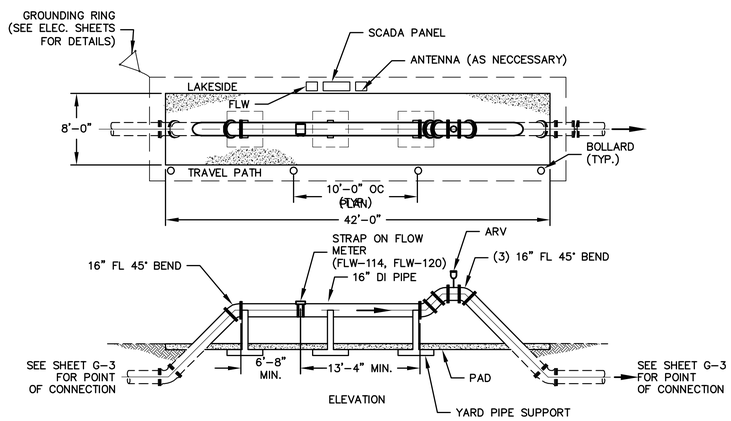

NEW 16" METER ASSEMBLY

1/8"=1'-0" (FLW-114, FLW-120)

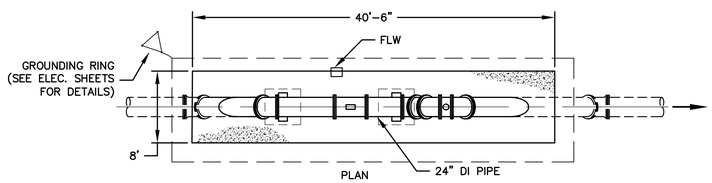

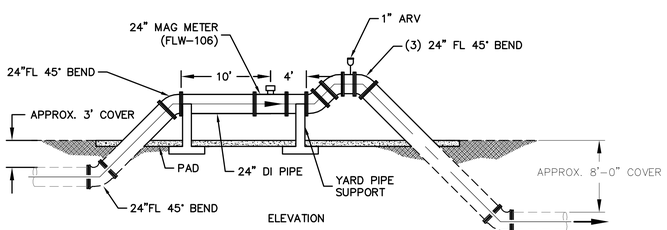

NEW 24" METER ASSEMBLY

1/8"=1'-0" (FLW-106)

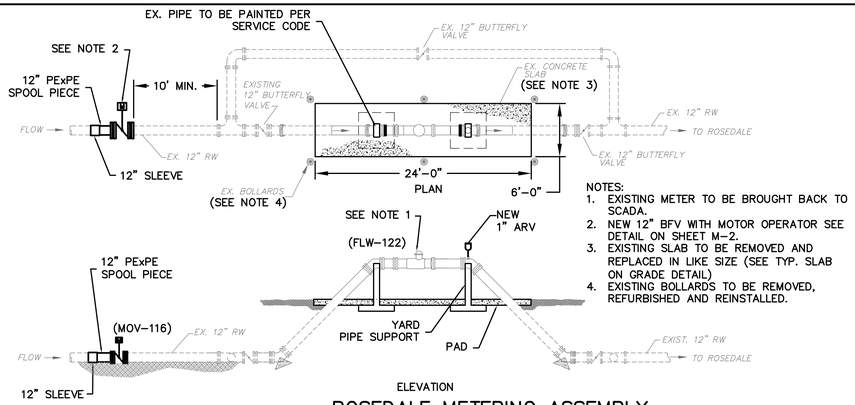

NOTES:
1. EXISTING METER TO BE BROUGHT BACK TO SCADA.
2. NEW 12" BFV WITH MOTOR OPERATOR SEE DETAIL ON SHEET M-2.
3. EXISTING SLAB TO BE REMOVED AND REPLACED IN LIKE SIZE (SEE TYP. SLAB ON GRADE DETAIL)
4. EXISTING BOLLARDS TO BE REMOVED, REFURBISHED AND REINSTALLED.

ROSEDALE METERING ASSEMBLY

NTS (MOV-116, FLW-122)

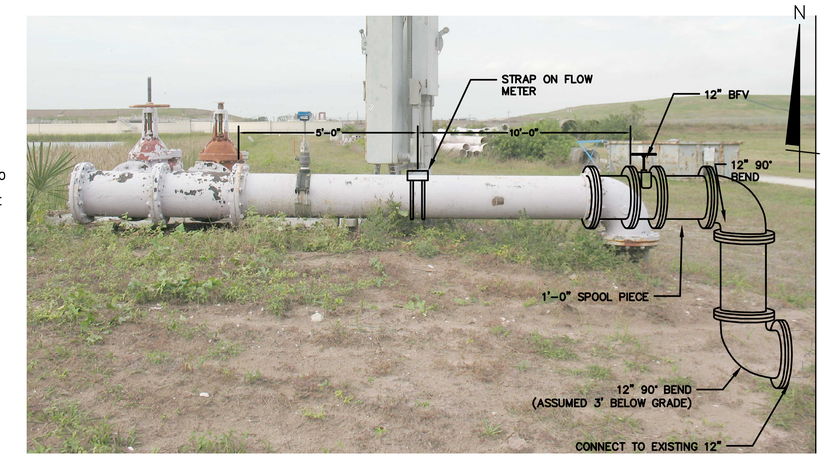

SOUTH LAKE 1 PUMP STATION METER ASSEMBLY DETAIL

NTS (FLW-112)

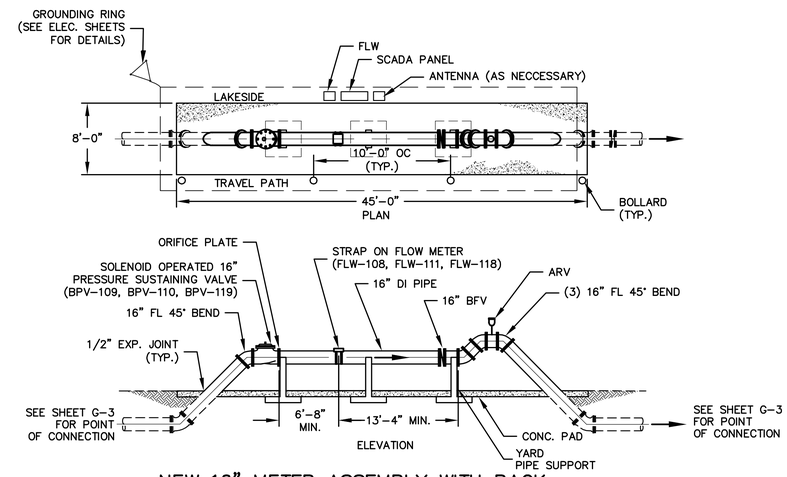

NEW 16" METER ASSEMBLY WITH BACK PRESSURE SUSTAINING VALVE

1/8"=1'-0" (BPV-109, BPV-110, FLW-108, BPV-119, FLW-111, FLW-118)

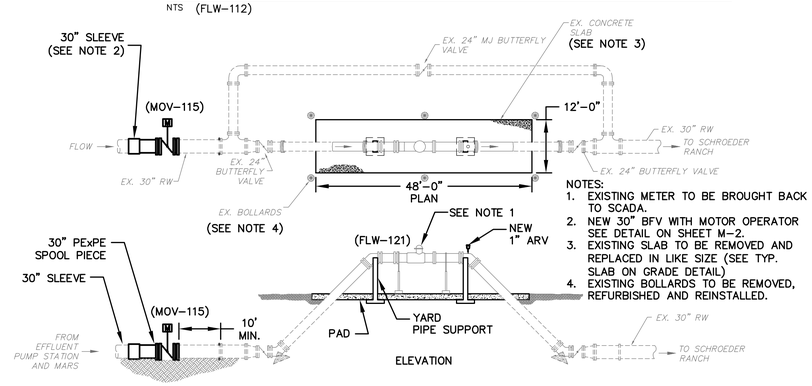

NOTES:
1. EXISTING METER TO BE BROUGHT BACK TO SCADA.
2. NEW 30" BFV WITH MOTOR OPERATOR SEE DETAIL ON SHEET M-2.
3. EXISTING SLAB TO BE REMOVED AND REPLACED IN LIKE SIZE (SEE TYP. SLAB ON GRADE DETAIL)
4. EXISTING BOLLARDS TO BE REMOVED, REFURBISHED AND REINSTALLED.

SCHROEDER RANCH METERING ASSEMBLY

NTS (MOV-115, FLW-121)

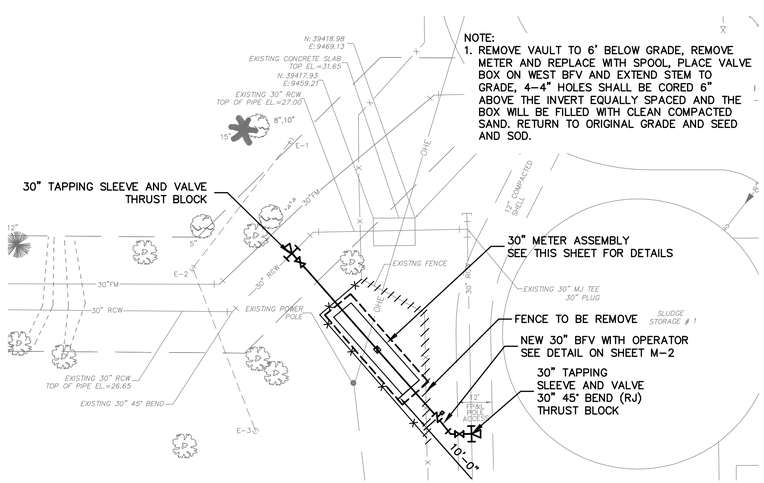

MARS METER REPLACEMENT DETAIL

NTS

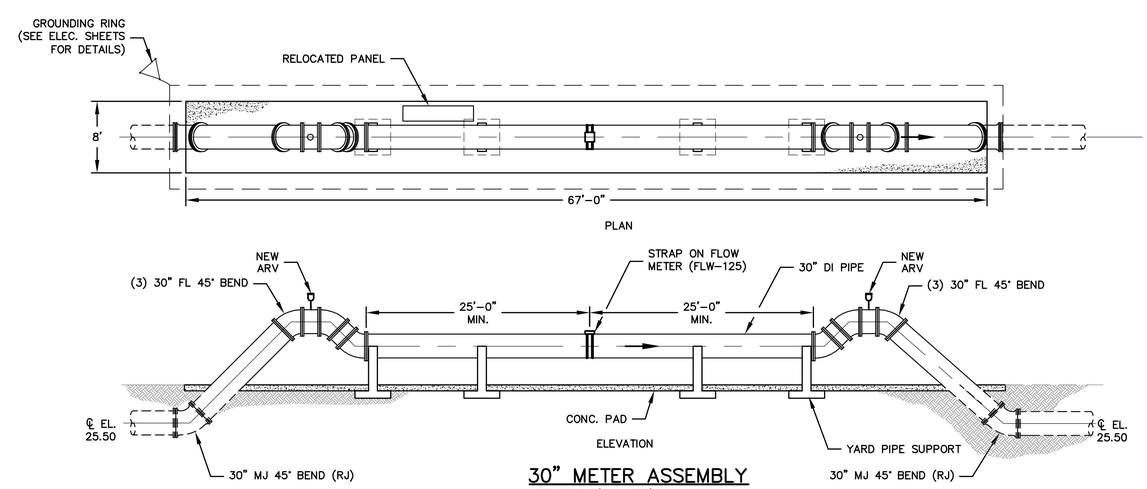

30" METER ASSEMBLY

1/8"=1'-0" (FLW-125)

REV.NO.	DESCRIPTIONS	DATE

REVISIONS

SEAL

MATTHEW S. LOVE, P.E.
No. 66118

SEAL

McKIM&CREED
1365 Hamlet Avenue
Clearwater, Florida 33756
Phone: (727)442-7196, Fax: (727)461-3827
EB0006691
www.mckimcreed.com

MANATEE COUNTY, FLORIDA

SEWRF RECLAIMED WATER AUTOMATION

MECHANICAL DETAILS 3

DATE:	AUGUST 2010
MCE PROJ. #	1024-0129
DRAWN	QES
DESIGNED	MSL
CHECKED	JSL
PROJ. MGR.	MSL

SCALE
HORIZONTAL: AS SHOWN
VERTICAL: NA

DRAWING NUMBER
M-3

STATUS: ISSUE FOR BID
REVISION

S:\1024\0129\00-Drawings\Mechanical\M-3 DETAILS-1024012B.dwg, 9/1/2010 8:59:17 AM, Brian Naugle

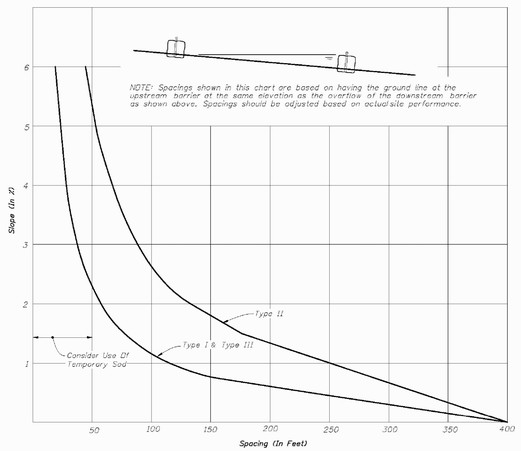

CHART I

RECOMMENDED SPACING FOR SYNTHETIC BALES OR BALE TYPE BARRIERS AND TYPE III SILT FENCE

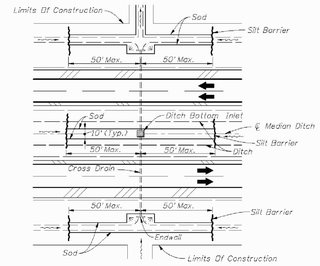

DITCH INSTALLATIONS AT DRAINAGE STRUCTURES

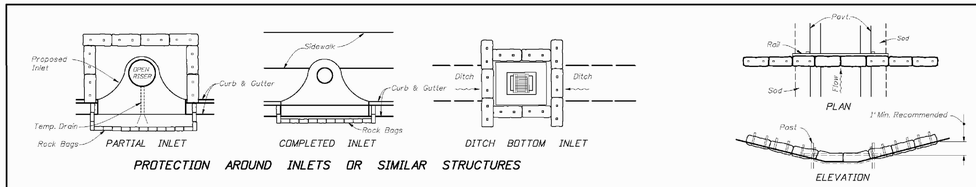

PROTECTION AROUND INLETS OR SIMILAR STRUCTURES

SYNTHETIC BALES OR BALE TYPE BARRIERS FOR PAVED DITCHES

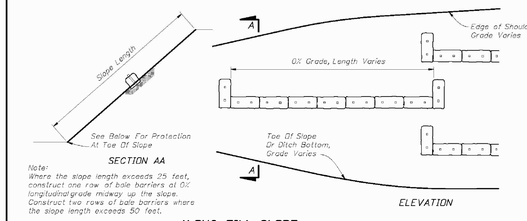

Note:
Where the slope length exceeds 25 feet, construct one row of bale barriers at 0% longitudinal grade midway up the slope. Construct two rows of bale barriers where the slope length exceeds 50 feet.

ALONG FILL SLOPE

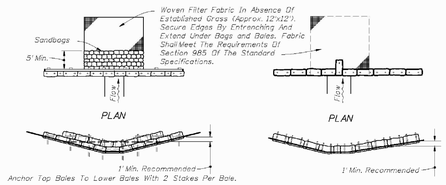

SYNTHETIC BALES OR BALE TYPE BARRIERS FOR UNPAVED DITCHES

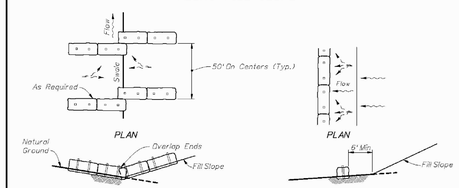

AT TOE OF SLOPE

BARRIERS FOR FILL SLOPES

NOTES FOR SYNTHETIC BALES OR BALE TYPE BARRIERS

1. Type I and II Synthetic Barrier should be spaced in accordance with Chart 1, Sheet 1.
2. Bales shall be trenched 3" to 4" and anchored with 2-1" x 2" (or 1" dia.) x 4' wood stakes. Stakes of other material or shape providing equivalent strength may be used if approved by the Engineer. Stakes other than wood shall be removed upon completion of the project.
3. Rails and posts shall be 2" x 4" wood. Other materials providing equivalent strength may be used if approved by the Engineer.
4. Adjacent bales shall be butted firmly together.
5. Where used in conjunction with silt fence, bales shall be placed on the upstream side of the fence.
6. Bales to be paid for under the contract unit price for Synthetic Bales, LF. The unit price shall include the cost of filter fabric for Type I and II Barriers. Sandbags shall be paid for under the unit price for Sandbagging, CY. Rock bags to be paid for under the contract unit price for Rock Bags, EA.

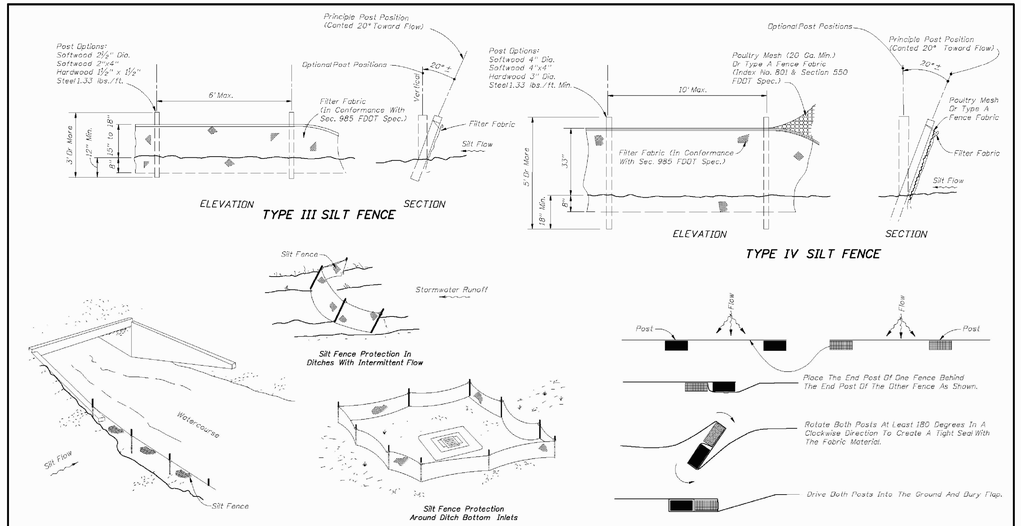

NOTES FOR SILT FENCES

1. Type III Silt Fence to be used at most locations. Where used in ditches, the spacing for Type III Silt fence shall be in accordance with Chart 1, Sheet 1.
2. Type IV Silt Fence to be used where large sediment loads are anticipated. Suggested use is where fill slope is 1:2 or steeper and length of slope exceeds 25 feet. Avoid use where the detained water may back into travelanes or off the right of way.
3. Do not construct silt fences across permanent flowing watercourses. Silt fences are to be at upland locations and turbidity barriers used at permanent bodies of water.
4. Where used as slope protection, Silt Fence is to be constructed on 0% longitudinal grade to avoid channelizing runoff along the length of the fence.
5. Silt Fence to be paid for under the contract unit price for Staked Silt Fence, (LF).

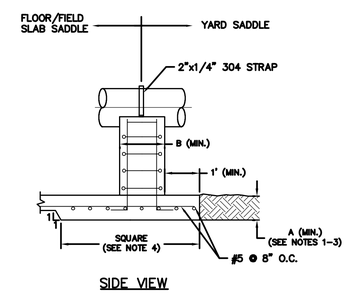

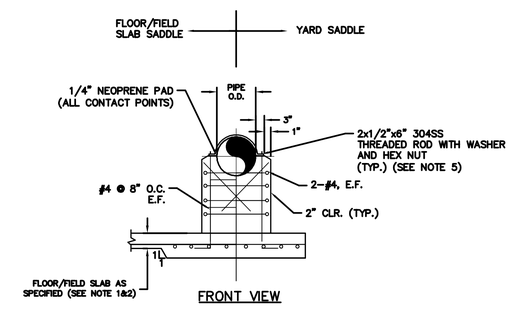

GENERAL NOTES:

1. PIPE SUPPORT SLAB DEPTH SHALL BE NO LESS THAN ADJOINING FLOOR SLAB.
2. PIPE SUPPORT REINFORCEMENT SHALL BE NO LESS THAN ADJOINING REINFORCEMENT REQUIREMENTS
3. FOR A=10" OR THICIKER, USE 2 LAYERS OF REINF. T/B E/W.
4. SADDLE FOOTER SHALL BE SQUARE (IN INCREMENTS OF 6") AND BE SIZED FOR FULL PIPE CONDITION WITH A MAXIMUM SOIL BEARING CAPACITY OF 500 LBS/SF. BASED ON REQUIRED SUPPORT SPACING.
5. ROD SHALL BE EMBEDED WITH EPOXY GROUT TO A DEPTH OF 6".
6. INCREASE 4" CLEARANCE AS REQUIRED IF BOLT HAS TO BE INSERTED FROM THE SUPPORT SIDE OF THE CONNECTION.
7. SLAB DEPTH (A); 8" FOR OD< 24"
   10" FOR 24" < OD < 42"
8. SADDLE WIDTH (B); 8" FOR OD < 24"
   12" FOR 24" < OD < 42"

YARD PIPE SUPPORT DETAIL

NTS

REV.NO.	DESCRIPTIONS	DATE

REVISIONS

SEAL

MATTHEW S. LOVE, P.E.
No. 66118

SEAL

McKIM&CREED
1365 Hamlet Avenue
Clearwater, Florida 33756
Phone: (727)442-7196, Fax: (727)461-3827
EB0006691
www.mckimcreed.com

MANATEE COUNTY, FLORIDA

SEWRF RECLAIMED WATER AUTOMATION

EROSION CONTROL DETAILS AND MECHANICAL DETAILS 4

DATE:	AUGUST 2010
MCE PROJ. #	1024-0129
DRAWN	BFN
DESIGNED	MSL
CHECKED	JSL
PROJ. MGR.	MSL

SCALE
HORIZONTAL: AS SHOWN
VERTICAL: NA

DRAWING NUMBER
M-4

STATUS: ISSUE FOR BID
REVISION

S:\1024\01251\05-Drawings\Mechanical\M-4 DETAILS-102401129.dwg, 9/7/2010 9:02:21 AM, Brian Naught

FUNCTION SYMBOL SCHEDULE

	FIRST LETTER		SUCCEEDING–LETTERS		
	MEASURED OR INITIATING VARIABLE	MODIFIER	READOUT OR PASSIVE FUNCTION	OUTPUT FUNCTION	MODIFIER
A	Analysis		Alarm		
B	Burner, Combustion		Programmer		
C	Conductivity (Electrical)			Control	Closed
D	Density or Specific Gravity	Differential			
E	Voltage		Sensor (Primary Element)	Eduction	
F	Flow Rate	Ratio (Fraction)			
G	Gaging		Glass, Viewing Device		
H	Hand				High
I	Current (Electrical)		Indicate		
J	Power	Scan			
K	Time, Time Schedule			Control Station	
L	Level		Light (Pilot)		Low
M	Motor				Middle, Intermediate
N	Vibration				
O	Operation	Offset	Orifice, Restriction		Open
P	Pressure, Vacuum		Point (Test) Connection		
Q	Quantity, Event	Integrate, Totalize	Integrate		
R	Radiation		Record, Print	Regulate	
S	Speed, Frequency	Safety		Switch	
T	Temperature			Transmit	
U	Multivariable	Trend	Multifunction	Multifunction	Multifunction
V	Viscosity	Vacuum		Valve, Damper, Louver, Gate	
W	Weight, Force, Torque		Well		
X	Unclassified		Unclassified	Unclassified	Unclassified
Y				Relay, Compute, Convert	
Z	Position			Final Control Element	Drive, Actuator, Unclassified Final Control Element

BASIC SYMBOLS

MULTIPLE FUNCTION

- FIELD MOUNTED INSTRUMENT OR DEVICE
- FRONT OF PANEL MOUNTED INSTRUMENT ON UCP OR MCC, VFD
- REAR OF PANEL MOUNTED INSTRUMENT ON UCP OR MCC, VFD
- FRONT OF PANEL MOUNTED INSTRUMENT ON MAIN PANEL
- REAR OF PANEL MOUNTED INSTRUMENT ON MAIN PANEL
- PLC AND/OR COMPUTER SOFTWARE COMPONENT (OPERATOR ACCESSIBLE UNDER NORMAL CONDITIONS)
- PLC AND/OR COMPUTER GENERATED COMPONENT (NOT OPERATOR ACCESSIBLE UNDER NORMAL CONDITIONS)
- PLC INPUT/OUTPUT

LINE CODES

- INSTRUMENT SIGNAL
- ELECTRICAL SIGNAL
- DATA LINK
- PNEUMATIC
- CAPILLARY
- SONIC OR R.F.
- HYDRAULIC
- TELEPHONE
- NO ELECTRICAL CONNECTION
- ELECTRICAL CONNECTIONS (INDICATED BY DOTS)
- HEAT TRACED PROCESS
- LINE OR EQUIPMENT
- MATCHLINE
- SHEET — PROCESS LINE OR ELECTRICAL SIGNAL CONTINUATION TO/FROM SHEET NUMBER INDICATED
- CONTINUATION ON SAME SHEET
- CONTINUATION ON FACILITIES NOT SHOWN ON DRAWINGS

VALVES, PUMPS & METERS

- FLAME ARRESTOR
- PINCH VALVE
- GATE
- NEEDLE
- BUTTERFLY
- BALL OR ROTARY
- GLOBE
- PLUG OR COCK
- DIAPHRAGM
- CHECK
- DIAPHRAGM CHECK
- CONTROL VALVE POSITIONER
- PRESSURE REGULATING VALVE
- BACKPRESSURE REGULATING VALVE
- PISTON OPERATED
  S=SOLENOID OPERATED
  M=MOTOR OPERATED
  P=PNEUMATIC OPERATED
- DRAIN
- Y=WEIR GATE
  T=SLIDE SLUICE GATE
  I =STOP LOG
- BLIND FLANGE
- PULSATION DAMPENER
- PRESSURE RELIEF OR SAFETY
- 3–WAY
- 4–WAY
- TELESCOPING
- REDUCER
- HOSE CONNECTION
- WAFER/CHECK VALVE

VALVES, PUMPS & METERS (CONT'D)

- FLOAT SWITCH OR FLOAT
- (ARV) AIR RELEASE VALVE
  (ARVV) AIR VACUUM RELEASE VALVE
- ELECTRIC MOTOR
- ORIFICE/ANNUBAR
- AIR DIFFUSER
- LIQUID DIFFUSER
- CAPACITANCE METER
- REGULATOR/FILTER
- SUBMERSIBLE PUMP
- MAGNETIC METER (INLINE/INSERT)
- ULTRASONIC METER
- VENTURI OR FLOW TUBE
- PROPELLER OR TURBINE METER
- DOPPLER OR TRANSIT TIME FLOW METER
- ROTAMETER
- PROGRESSING CAVITY PUMP
- CENTRIFUGAL PUMP
- POSITIVE DISPLACEMENT PUMP
- DIAPHRAGM OR METERING PUMP
- EDUCTOR
- STRAINER
- DIAPHRAGM ISOLATOR
- HORN
- GRADUATED MEASURING CYLINDER
- CYLINDER HYDRAULIC OR PNEUMATIC
- LATERAL WYE
- RUPTURE DISK
- RESTRAINED FLEX CONN.
- FLEX CONN.
- FILTER AIR/WATER
- CENTRIFUGAL BLOWER
- POSITIVE DISPLACEMENT BLOWER
- MANUAL BAR RACK
- MIXER
- SUBMERSIBLE AERATOR/MIXER (ELECTRIC MOTOR DRIVEN)
- UNION

MISCELLANEOUS SYMBOLS

- PURGE CONNECTION
- SAMPLE POINT
- INTERLOCK
- MULTIPLY
- DIVIDE
- HIGH SELECT
- LOW SELECT
- SQUARE ROOT
- SUM (ALGEBRAIC)
- SPECIAL FUNCTION
- R+B — RATIO PLUS BIAS
- dL/dt — RATE OF RISE (LEVEL)

EQUIPMENT NOTATION

- B = BLOWER OR FAN
- E = ENGINE
- G = GENERATOR
- F = FILTER
- GS = GRINDER/SCREEN
- K = COMPRESSOR
- H = HOIST
- ME = MECHANICAL EQUIPMENT
- MX = MIXER
- P = PUMP
- R = HEAT EXCHANGER
- T = TANK OR SUMP

VALVE DESIGNATIONS

- HV = HAND VALVE
- FCV = FLOW CONTROL VALVE (MODULATING)
- PRV = PRESSURE REGULATING VALVE
- LCV = LEVEL CONTROL VALVE
- FV = FLOW VALVE (NON–MODULATING)
- MV = MUD VALVE
- TV = TELESCOPING VALVE
- CV = CHECK VALVE
- MOV = MOTOR OPERATED VALVE

INSTRUMENT TAG NOTATION

FIC 0 1 01 A

- A — INSTRUMENT QUANTITY SUFFIX
- 01 — INSTRUMENT NUMBER
- 1 — PROCESS AREA
- 0 — PLANT AREA
- FIC — ISA INSTRUMENT FUNCTION

VALVE OPERATION NOTATION

- EFC = ELECTRIC FAIL CLOSE
- AFC = AIR FAIL CLOSE
- EFO = ELECTRIC FAIL OPEN
- AFO = AIR FAIL OPEN
- AFS = AIR FAIL STATIC
- EFS = ELECTRIC FAIL STATIC

CONTROLLER NOTATION

- PV = PROCESS VARIABLE INPUT
- SP = SET POINT INPUT
- C = CONTROL OUTPUT

PLC NOTATIONS

- AI = ANALOG INPUT
- AO = ANALOG OUTPUT
- DI = DISCRETE INPUT
- DO = DISCRETE OUTPUT
- D/A = DISCRETE TO ANALOG CONVERTOR
- SSDC = SURGE SUPPRESSION DEVICE

HAND SWITCH NOTATION

- HOA = HAND–OFF–AUTO
- S/S = START/STOP
- SEL = SELECTOR
- O/C = OPEN/CLOSE
- O/O = ON/OFF
- LOS = LOCKOUT–START
- D/S = DUTY/STANDBY
- FOS = FAST–OFF–SLOW
- OAC = OPEN–AUTO–CLOSE
- OOCA = OPEN–OFF–CLOSE–AUTO
- ROF = REVERSE–OFF–FORWARD
- ROL = RAISE–OFF–LOWER
- F/R = FORWARD/REVERSE
- HOR = HAND–OFF–REMOTE
- LOR = LOCAL–OFF–REMOTE
- SAR = SILENCE–AUTO–RESET

MISCELLANEOUS NOTATIONS

- S/D = SHUTDOWN
- O/R = OVERRIDE
- MCC = MOTOR CONTROL CENTER
- VFD = VARIABLE FREQUENCY DRIVE
- UCP = UNIT CONTROL PANEL
- LCP = LOCAL CONTROL PANEL
- MCP = MASTER CONTROL PANEL
- ES = ELECTRICAL SUPPLY
- IS = INLET SILENCER
- DS = DISCHARGE SILENCER
- SEQ = SEQUENCER/ALTERNATOR
- SA = SURGE ARRESTOR
- DO = DISSOLVED OXYGEN
- ETM = ELAPSED TIME METER
- TURB = TURBIDITY
- US = ULTRASONIC

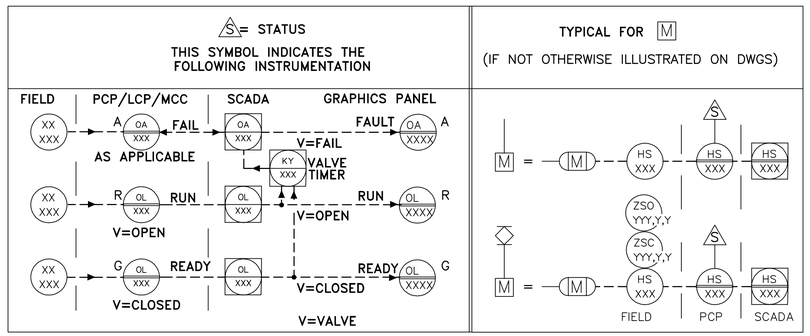

REV.NO.	DESCRIPTIONS	DATE
	REVISIONS	

SEAL

THOMAS E. ROBINSON JR.
P.E. No. 62976

SEAL

McKIM&CREED
1365 Hamlet Avenue
Clearwater, Florida 33756
Phone: (727)442–7196, Fax: (727)461–3827
EB0006691
www.mckimcreed.com

MANATEE COUNTY, FLORIDA

SEWRF RECLAIMED WATER AUTOMATION

PROCESS AND INSTRUMENTATION GENERAL NOTES, LEGEND AND ABBREVIATIONS

DATE:	JULY 2010
MCE PROJ. #	1024–0129
DRAWN	EEB
DESIGNED	EEB
CHECKED	TER
PROJ. MGR.	MSL

SCALE
HORIZONTAL: NA
VERTICAL: NA

DRAWING NUMBER
I-1

STATUS: ISSUE FOR BID
REVISION

S:\1024\0129\80-Drawings\Instrumentation\I-01_1024012S.dwg, 7/8/2010 8:44:34 AM, Quint Sheton

LEGEND:

- FM – EXISTING FLOW METER (C)
- EXISTING PUMP STATION
- EXISTING VALVE
- CCT – CHLORINE CONTACT TANK
- EPS – EFFLUENT PUMP STATION
- MARS – MANATEE AGRICULTURAL REUSE SYSTEM
- EXISTING POND EFFLUENT
- EXISTING PLANT EFFLUENT
- EXISTING GRAVITY FLOW
- EXISTING WEIR GATE
- PDPS – PLANT DRAIN PUMP STATION
- EXISITNG LAKE LEVEL INDICATOR
- PROPOSED DISCONNECT
- PROPOSED EFFLUENT
- PROPOSED POND EFFLUENT
- PROPOSED VALVE
- M – PROPOSED ELECTRIC VALVE OPERATOR
- BPV –BACK PRESSURE SUSTAINING VALVE
- FLW –FLOWMETER
- LIT –LEVEL INDICATOR TRANSMITTER
- MOV –MOTOR OPERATED VALVE

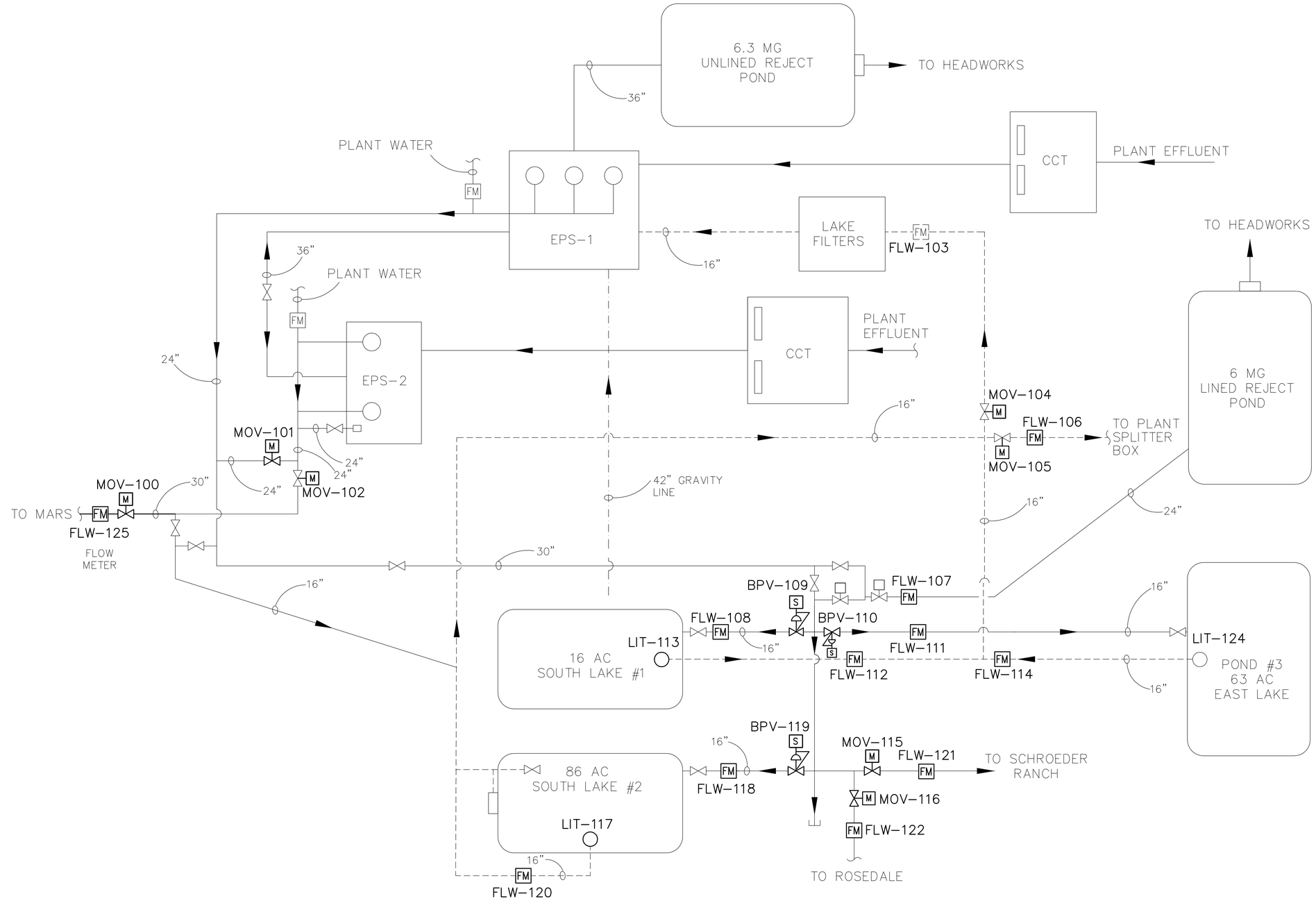

REV.NO.	DESCRIPTIONS	DATE
	REVISIONS	

SEAL

THOMAS E. ROBINSON JR.
P.E. No. 62976

SEAL

McKIM&CREED
1365 Hamlet Avenue
Clearwater, Florida 33756
Phone: (727)442–7196, Fax: (727)461–3827
EB0006691
www.mckimcreed.com

MANATEE COUNTY, FLORIDA

SEWRF RECLAIMED WATER AUTOMATION

PROCESS SCHEMATIC

DATE:	JULY 2010
MCE PROJ. #	1024–0129
DRAWN	EEB
DESIGNED	EEB
CHECKED	TER
PROJ. MGR.	MSL

SCALE
HORIZONTAL: AS SHOWN
VERTICAL: NA

DRAWING NUMBER
I-2

STATUS: ISSUE FOR BID
REVISION

S:\1024\0129\05-Drawings\Instrumentation\I-0.2_1024129.dwg, 7/9/2010 1:43:06 PM, Quint Shelton

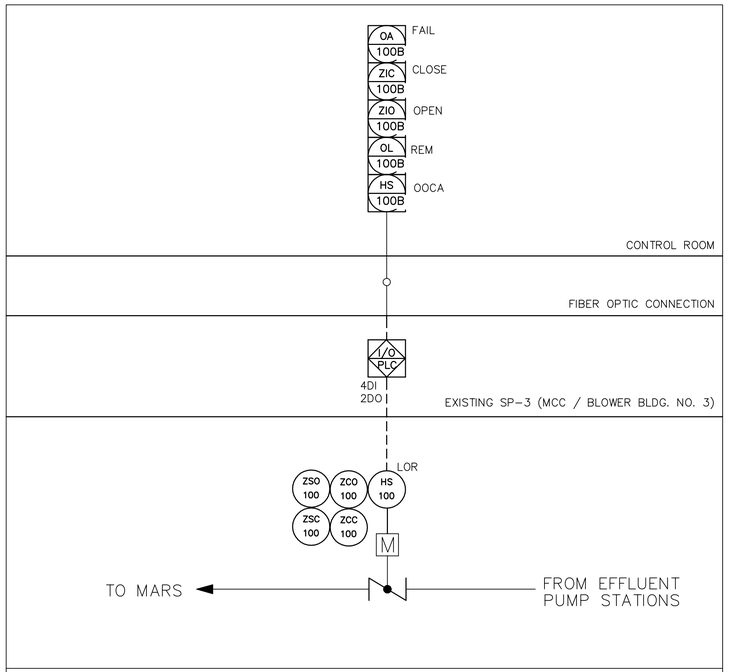

EFFLUENT VALVE TO MARS - LOOP NO. MOV-100

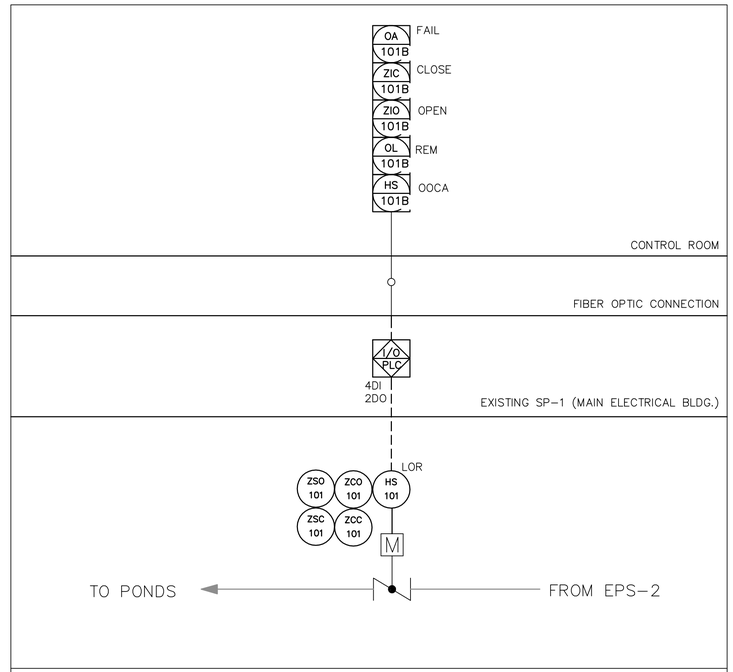

EFFLUENT INTERCONNECT VALVE LOOP NO. MOV-101

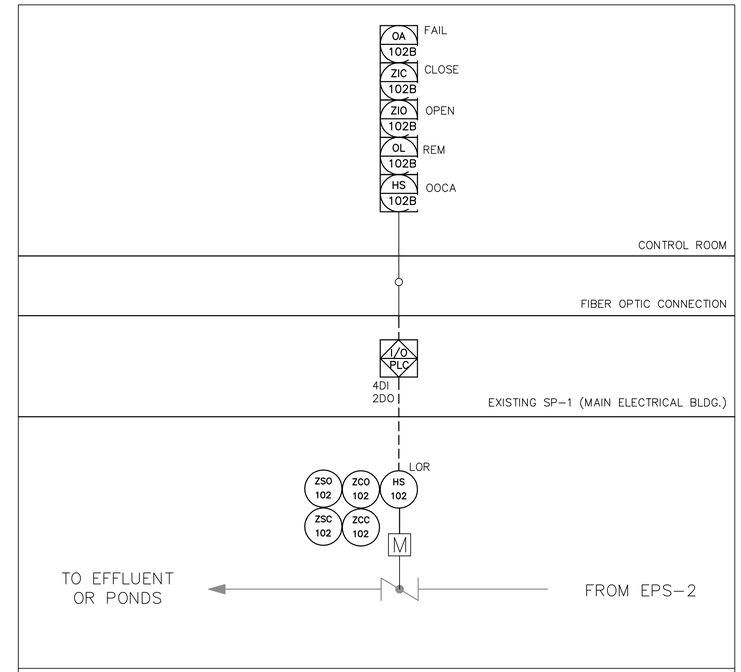

MARS VALVE LOOP NO. MOV-102

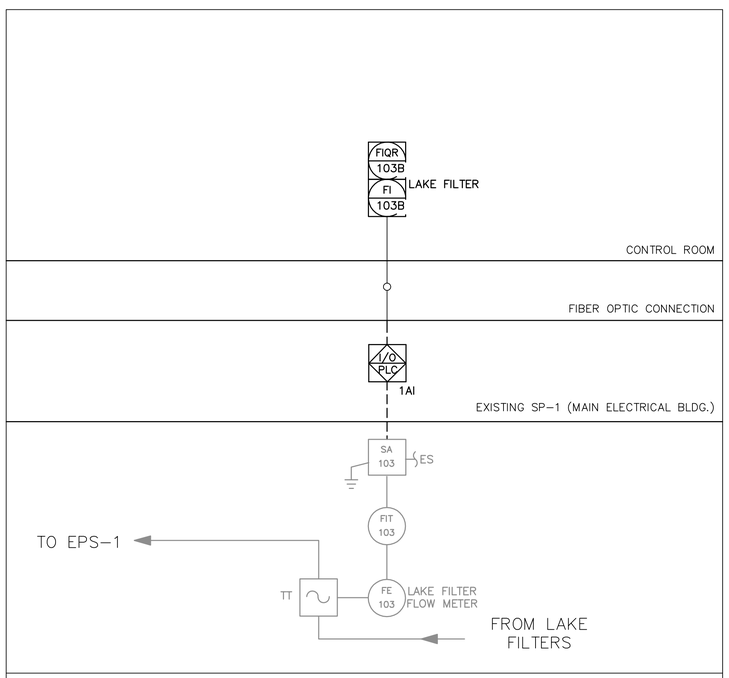

EXISTING LAKE FILTER FLOWMETER - LOOP NO. FLW-103

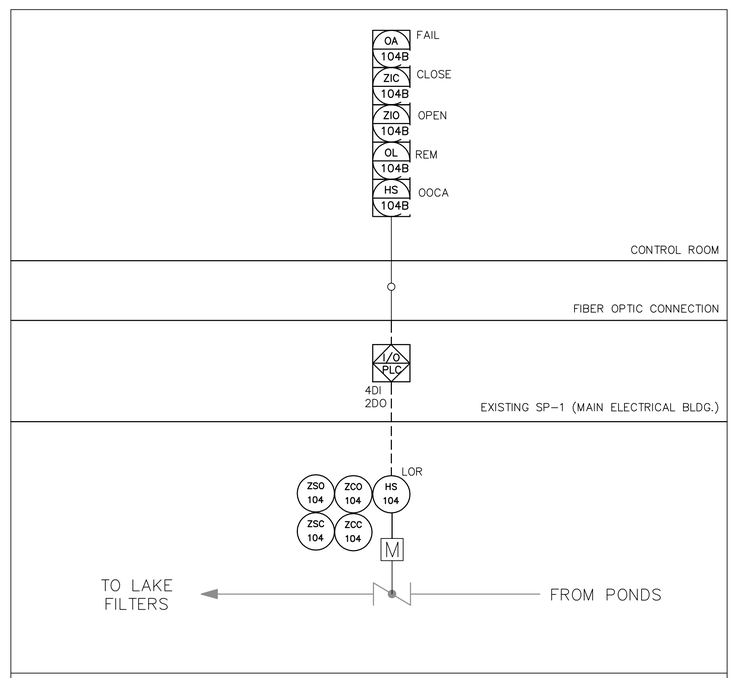

FLOW TO LAKE FILTERS FROM PONDS VALVE - LOOP NO. MOV-104

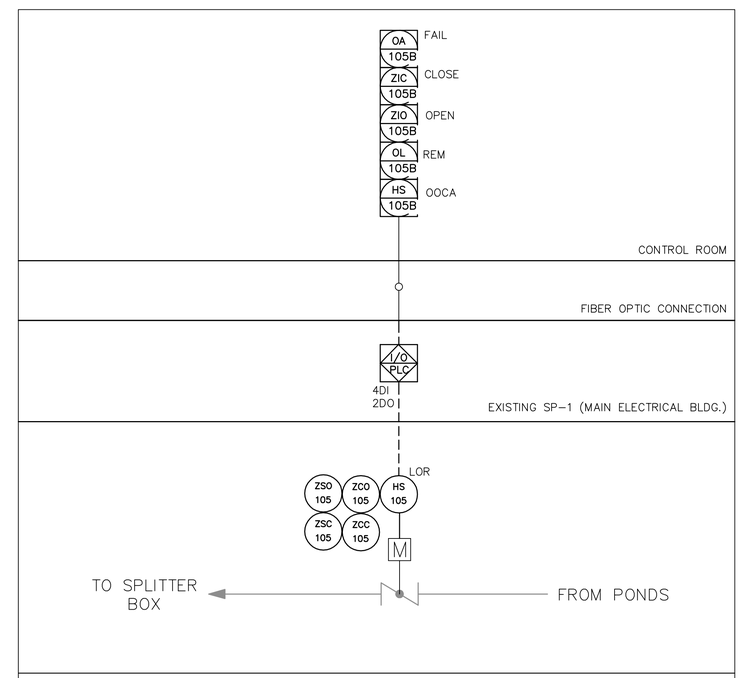

FLOW TO SPLITTER BOX FROM PONDS VALVE - LOOP NO. MOV-105

REV.NO.	DESCRIPTIONS	DATE
	REVISIONS	

SEAL

THOMAS E. ROBINSON JR.
P.E. No. 62976

SEAL

McKIM&CREED
1365 Hamlet Avenue
Clearwater, Florida 33756
Phone: (727)442-7196, Fax: (727)461-3827
EB0006691
www.mckimcreed.com

MANATEE COUNTY, FLORIDA

SEWRF RECLAIMED WATER AUTOMATION

PROCESS AND INSTRUMENTATION DIAGRAM
SHEET 1

DATE:	JULY 2010
MCE PROJ. #	1024-0129
DRAWN	EEB
DESIGNED	EEB
CHECKED	TER
PROJ. MGR.	MSL

SCALE
HORIZONTAL: NA
VERTICAL: NA

DRAWING NUMBER
I-3

STATUS: ISSUE FOR BID
REVISION

S:\1024\0129\05-Drawings\Instrumentation\I-03_1024129.dwg, 7/8/2010 8:44:49 AM, Quint Shelton

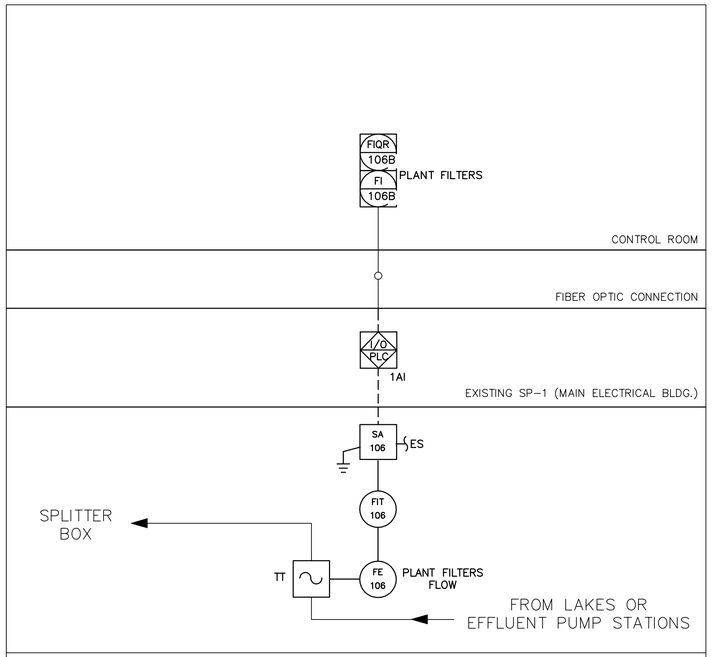

FLOW TO PLANT SPLITTER BOX FLOWMETER - LOOP NO. FLW-106

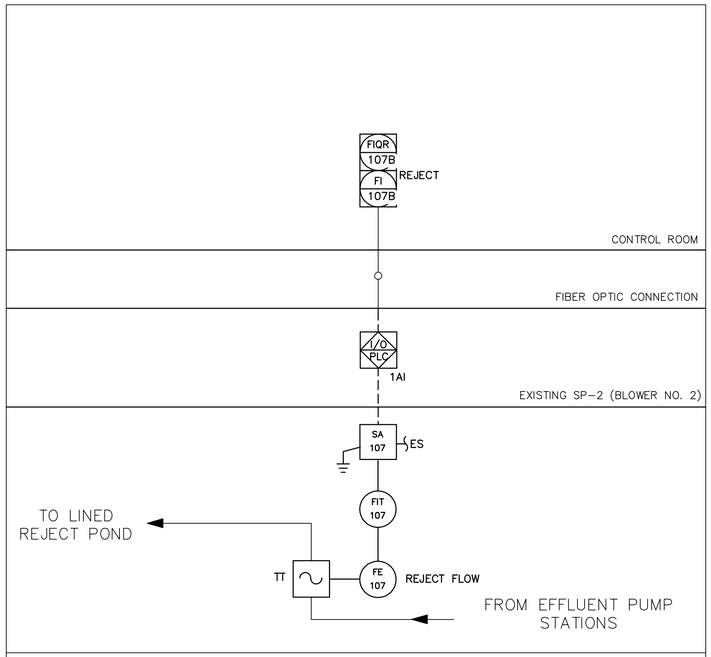

FLOW TO REJECT POND FLOWMETER - LOOP NO. FLW-107

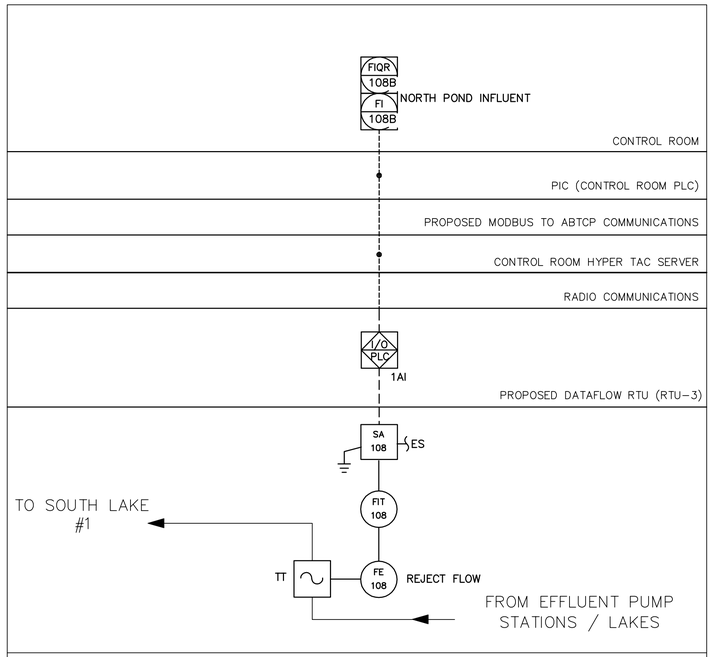

FLOW TO SOUTH LAKE #1 FLOWMETER - LOOP NO. FLW-108

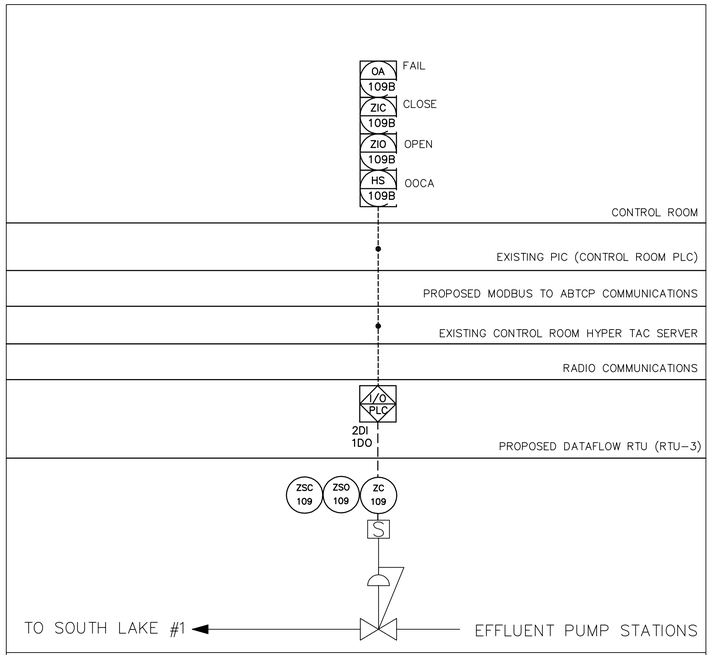

SOUTH LAKE #1 INFLUENT VALVE - LOOP NO. BPV-109

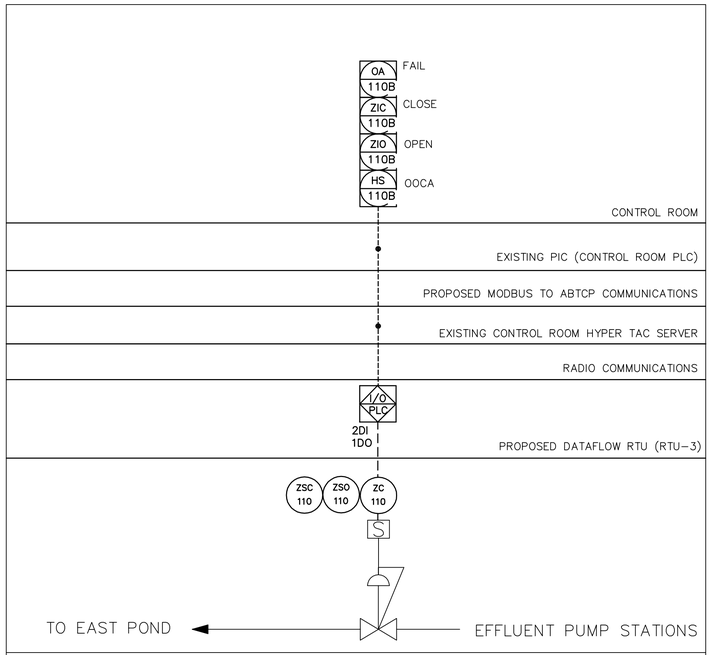

EAST POND INFLUENT VALVE - LOOP NO. BPV-110

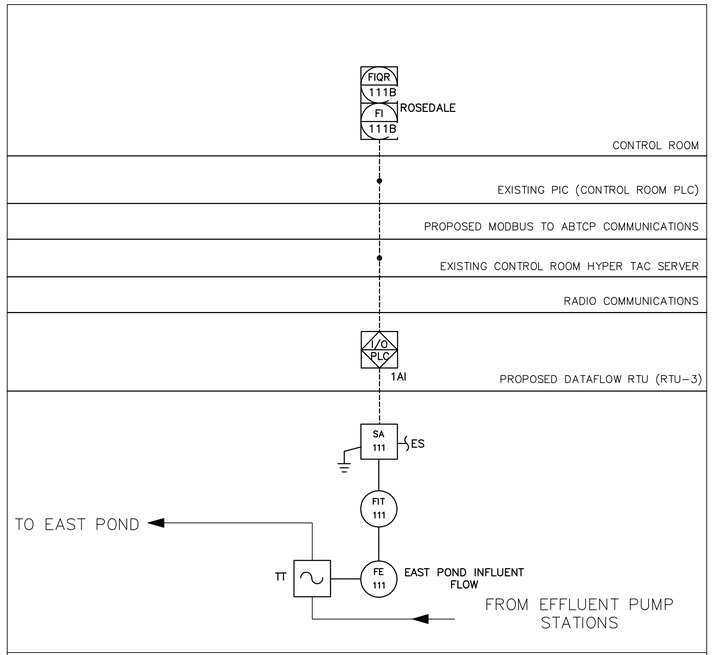

FLOW TO EAST POND FLOWMETER - LOOP NO. FLW-111

REV.NO.	DESCRIPTIONS	DATE
	REVISIONS	

SEAL

THOMAS E. ROBINSON JR.
P.E. No. 62976

SEAL

McKIM&CREED
1365 Hamlet Avenue
Clearwater, Florida 33756
Phone: (727)442-7196, Fax: (727)461-3827
EB0006691
www.mckimcreed.com

MANATEE COUNTY, FLORIDA

SEWRF RECLAIMED WATER AUTOMATION

PROCESS AND INSTRUMENTATION DIAGRAM
SHEET 2

DATE:	JULY 2010
MCE PROJ. #	1024-0129
DRAWN	EEB
DESIGNED	EEB
CHECKED	TER
PROJ. MGR.	MSL

SCALE
HORIZONTAL: NA
VERTICAL: NA

DRAWING NUMBER
I-4

STATUS: ISSUE FOR BID
REVISION

S:\1024\0129\Rb-Drawings\Instrumentation\I-04_1024129.dwg, 7/8/2010 8:44:57 AM, Quint Shelton

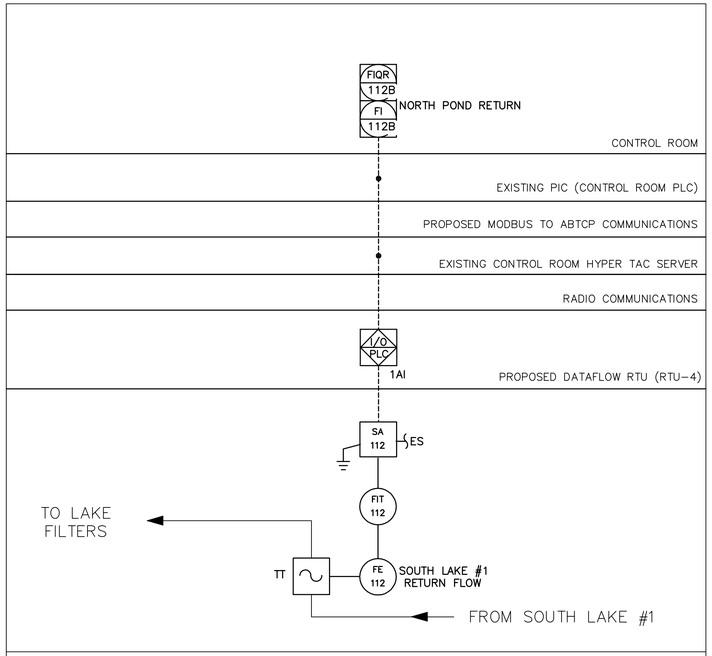

FLOW FROM SOUTH LAKE #1 TO LAKE FILTERS FLOWMETER - LOOP NO. FLW-112

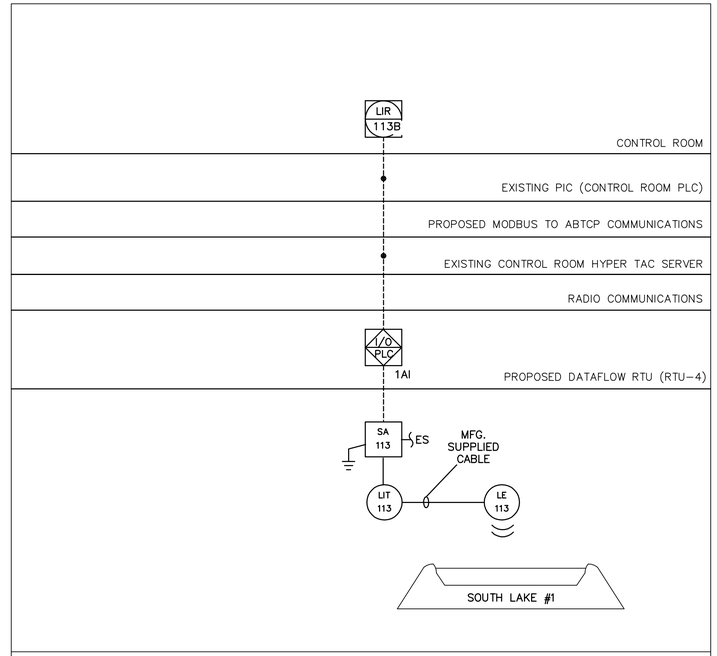

SOUTH LAKE #1 LEVEL TRANSMITTER - LOOP NO. LIT-113

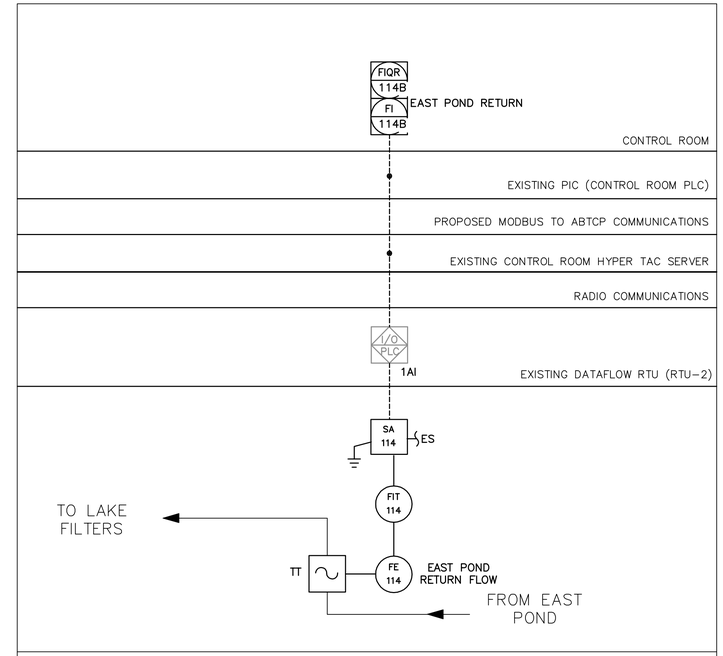

FLOW FROM EAST POND TO LAKE FILTERS FLOWMETER - LOOP NO. FLW-114

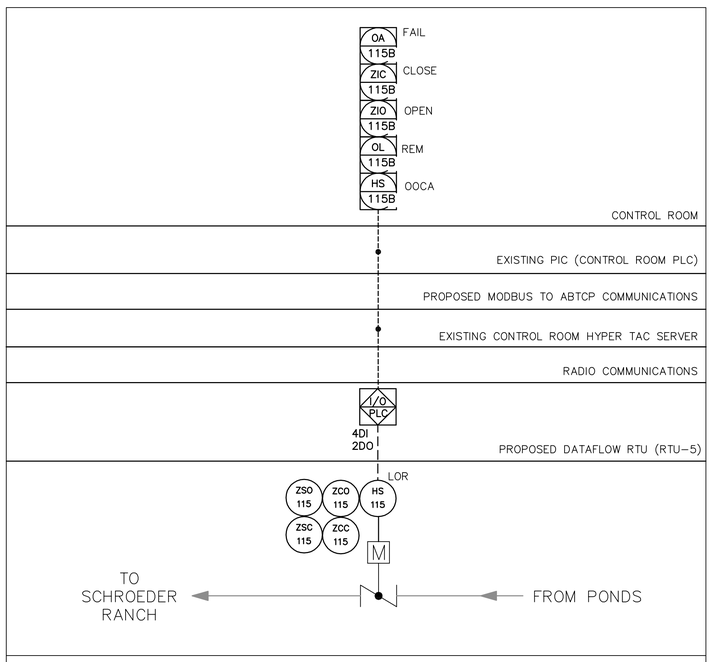

SCHROEDER RANCH VALVE - LOOP NO. MOV-115

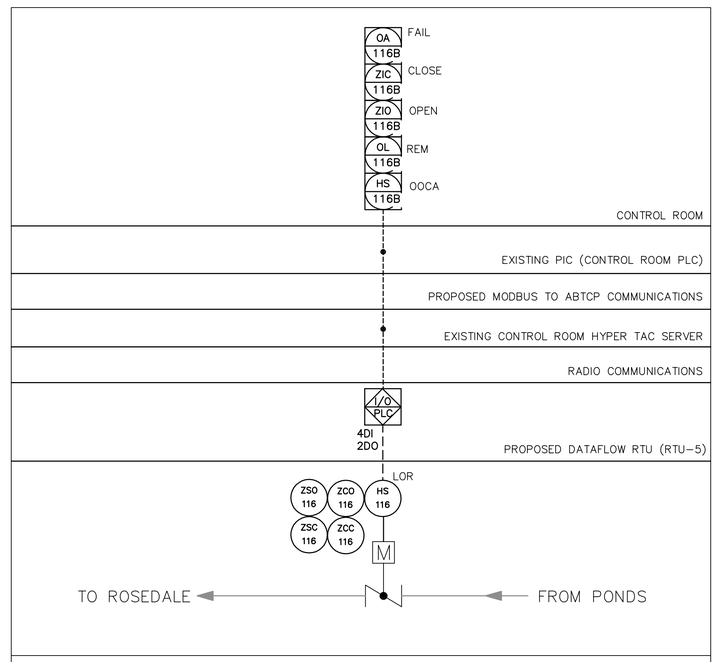

ROSEDALE VALVE - LOOP NO. MOV-116

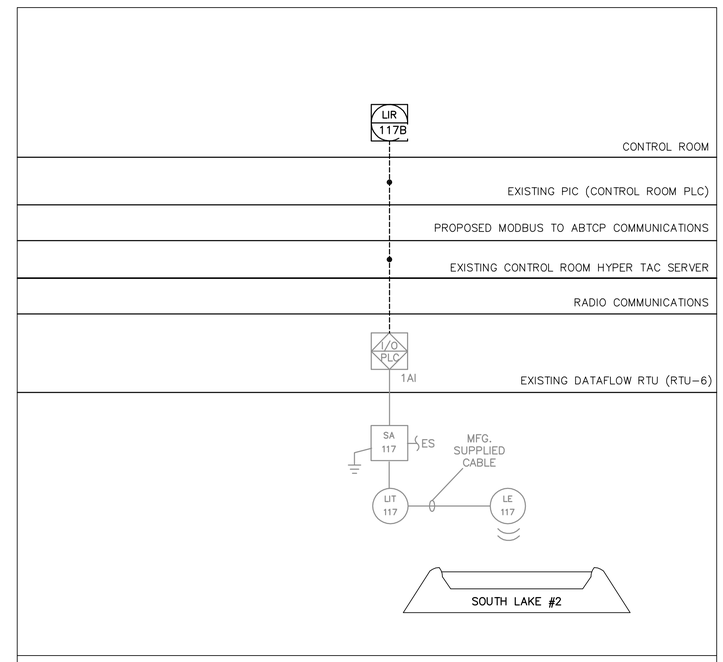

EXISTING SOUTH LAKE #2 LEVEL TRANSMITTER - LOOP NO. LIT-117

REV.NO.	DESCRIPTIONS	DATE
	REVISIONS	

SEAL

THOMAS E. ROBINSON JR.
P.E. No. 62976

SEAL

McKIM&CREED
1365 Hamlet Avenue
Clearwater, Florida 33756
Phone: (727)442-7196, Fax: (727)461-3827
EB0006691
www.mckimcreed.com

MANATEE COUNTY, FLORIDA

SEWRF RECLAIMED WATER AUTOMATION

PROCESS AND INSTRUMENTATION DIAGRAM
SHEET 3

DATE:	JULY 2010
MCE PROJ. #	1024-0129
DRAWN	EEB
DESIGNED	EEB
CHECKED	TER
PROJ. MGR.	MSL

SCALE
HORIZONTAL: NA
VERTICAL: NA

DRAWING NUMBER
I-5

STATUS: ISSUE FOR BID
REVISION

S:\1024\0129\90-Drawings\Instrumentation\I-03_1024129.dwg, 7/8/2010 8:45:05 AM, Quint Shelton

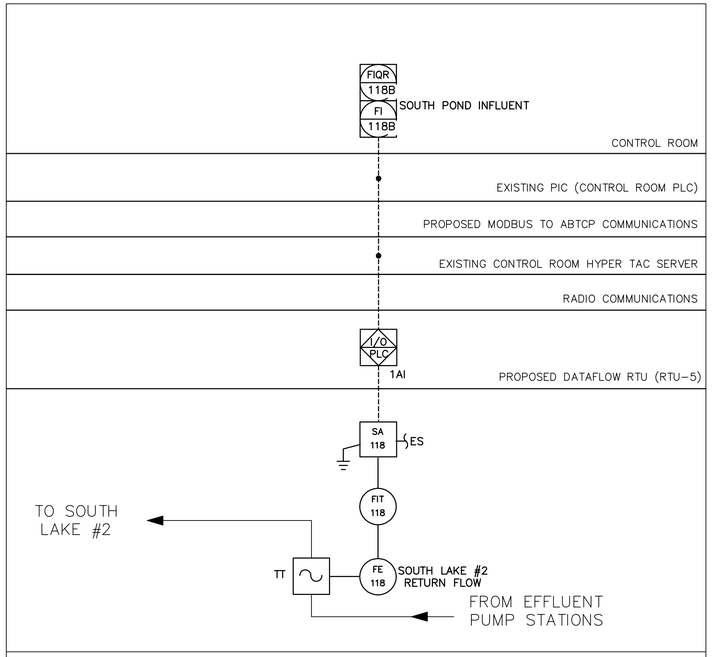

SOUTH LAKE #2 INFLUENT FLOWMETER - LOOP NO. FLW-118

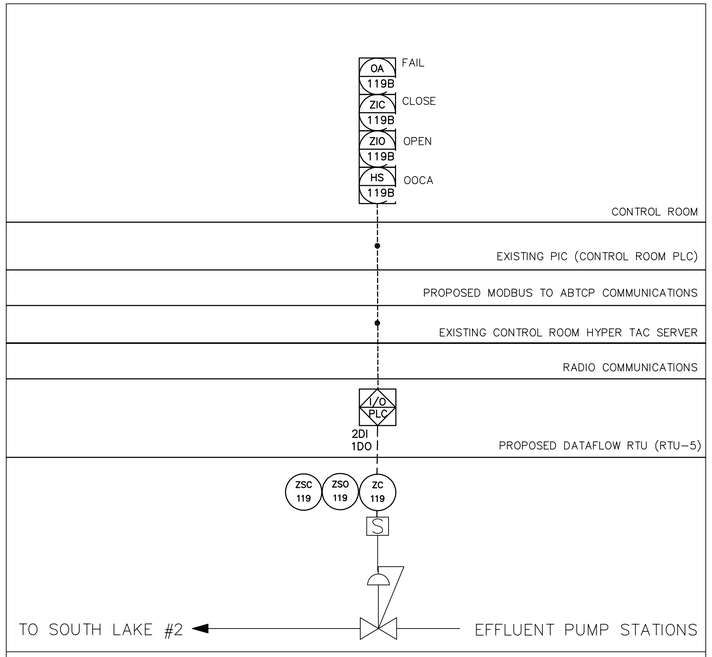

SOUTH LAKE #2 INFLUENT VALVE - LOOP NO. BPV-119

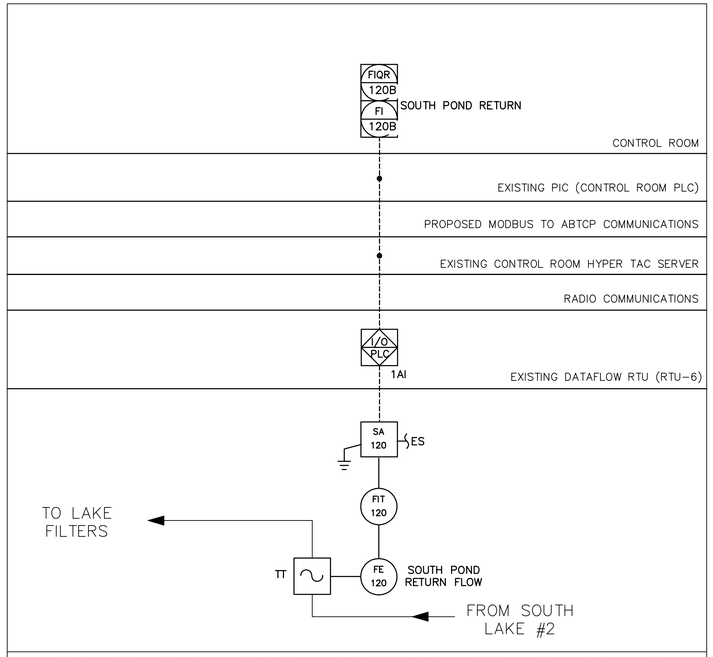

FLOW FROM SOUTH LAKE #2 TO LAKE FILTERS FLOWMETER - LOOP NO. FLW-120

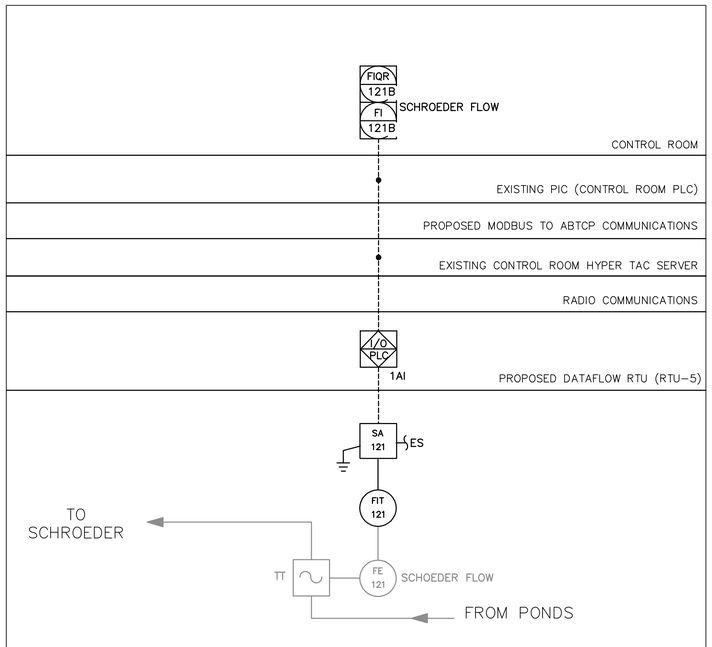

FLOW TO SCHROEDER FLOWMETER - LOOP NO. FLW-121

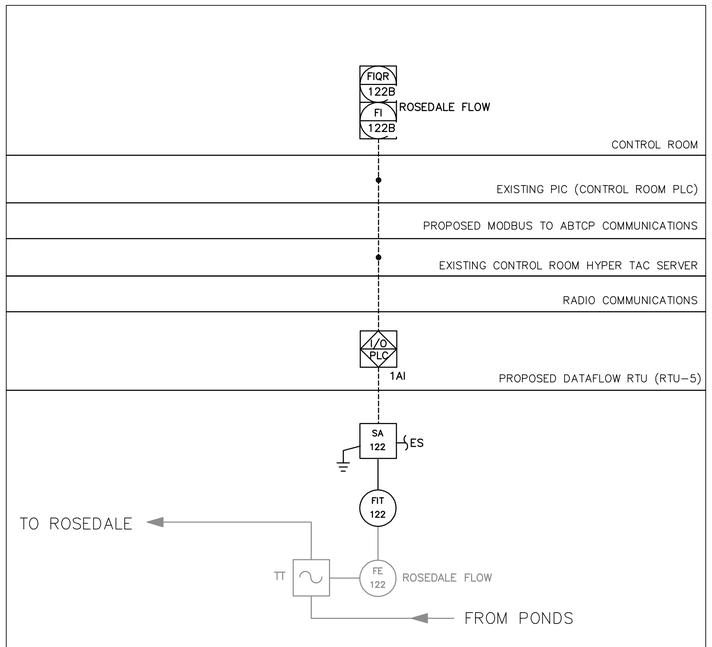

FLOW TO ROSEDALE FLOWMETER - LOOP NO. FLW-122

REV.NO.	DESCRIPTIONS	DATE
	REVISIONS	

SEAL

THOMAS E. ROBINSON JR.
P.E. No. 62976

SEAL

McKIM&CREED
1365 Hamlet Avenue
Clearwater, Florida 33756
Phone: (727)442-7196, Fax: (727)461-3827
EB0006691
www.mckimcreed.com

MANATEE COUNTY, FLORIDA

SEWRF RECLAIMED WATER AUTOMATION

PROCESS AND INSTRUMENTATION DIAGRAM
SHEET 4

DATE:	JULY 2010
MCE PROJ. #	1024-0129
DRAWN	EEB
DESIGNED	EEB
CHECKED	TER
PROJ. MGR.	MSL

SCALE
HORIZONTAL: NA
VERTICAL: NA

DRAWING NUMBER
I-6

STATUS: ISSUE FOR BID
REVISION

S:\1024\0129\00-Drawings\Instrumentation\I-06_1024012B.dwg, 7/8/2010 8:45:12 AM, Quint Shelton

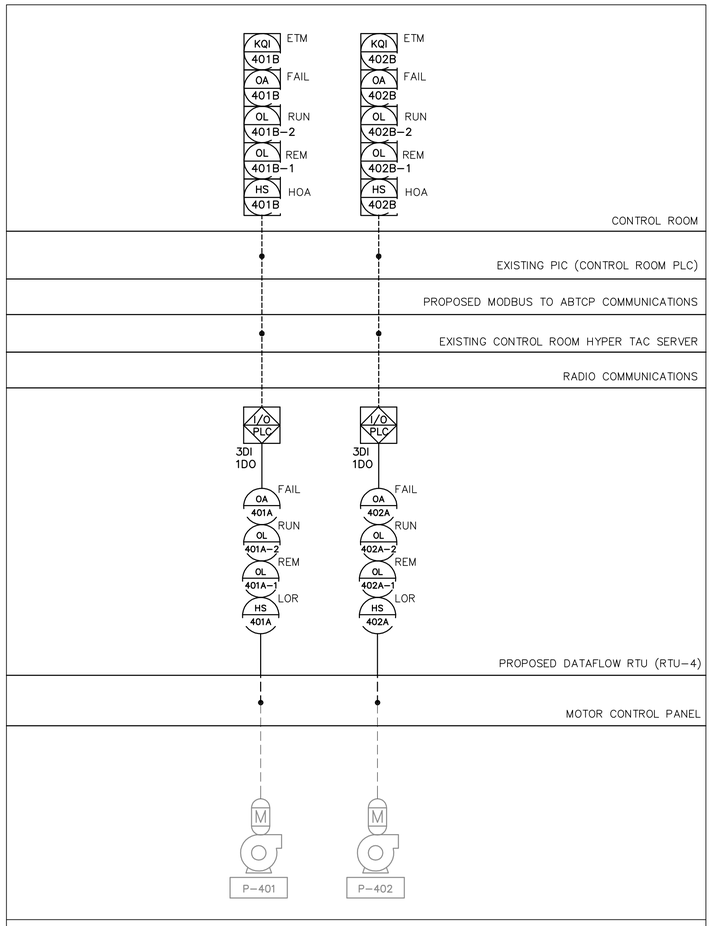

SOUTH LAKE #1 PUMP CONTROLS RTU-4

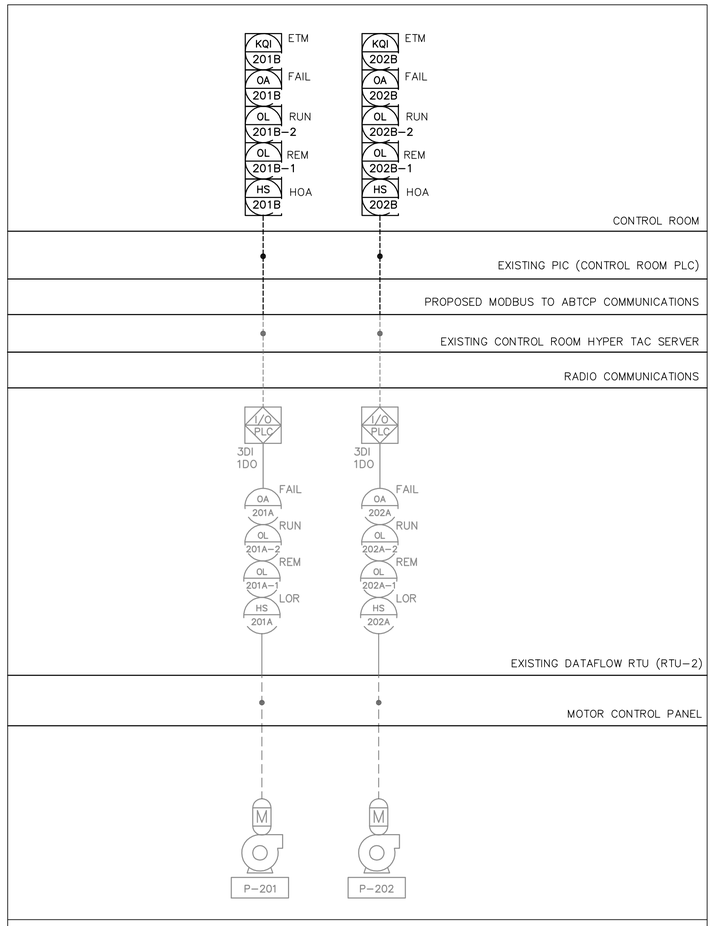

EAST POND PUMP CONTROLS RTU-2

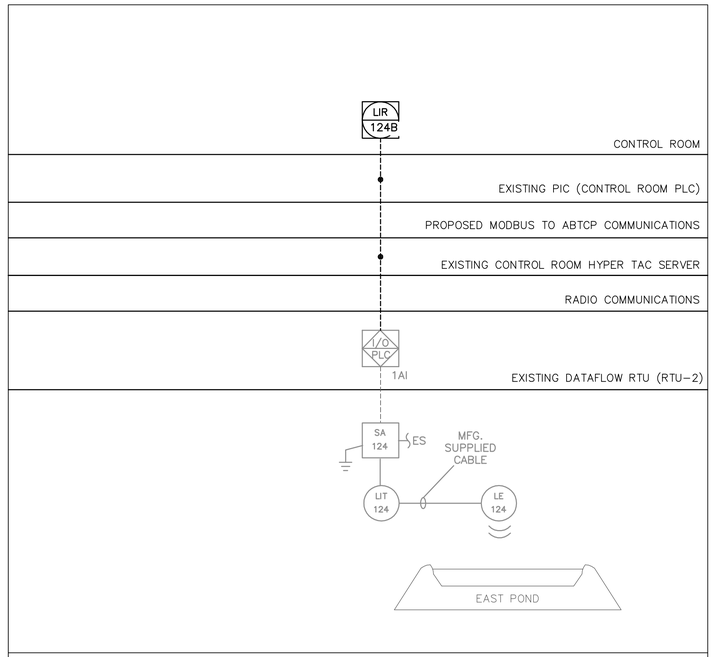

EAST POND LEVEL TRANSMITTER - LOOP NO. LIT-124

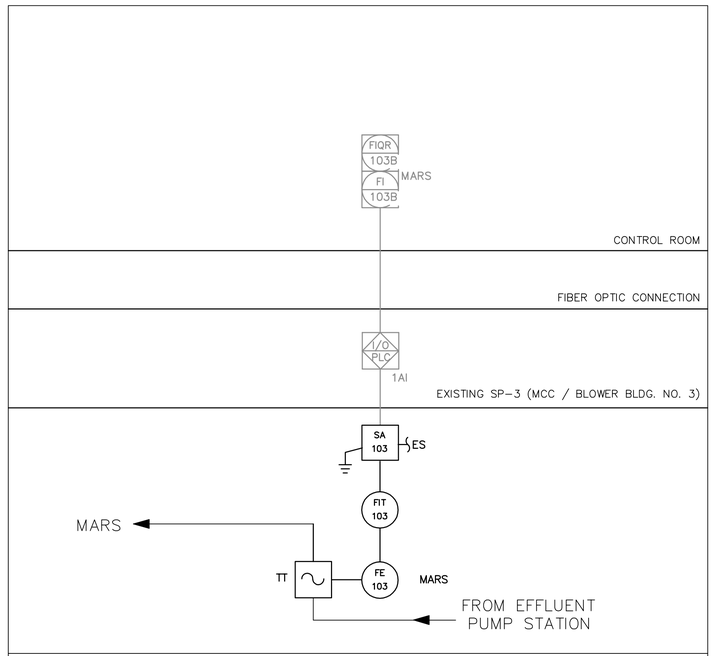

MARS FLOWMETER - LOOP NO. FLW-125

REV.NO.	DESCRIPTIONS	DATE

REVISIONS

SEAL

THOMAS E. ROBINSON JR.
P.E. No. 62976

SEAL

McKIM&CREED
1365 Hamlet Avenue
Clearwater, Florida 33756
Phone: (727)442-7196, Fax: (727)461-3827
EB0006691
www.mckimcreed.com

MANATEE COUNTY, FLORIDA

SEWRF RECLAIMED WATER AUTOMATION

PROCESS AND INSTRUMENTATION DIAGRAM
SHEET 5

DATE:	JULY 2010
MCE PROJ. #	1024-0129
DRAWN	EEB
DESIGNED	EEB
CHECKED	TER
PROJ. MGR.	MSL

SCALE
HORIZONTAL: NA
VERTICAL: NA

DRAWING NUMBER
I-7

STATUS: ISSUE FOR BID
REVISION

S:\1024\0129\90-Drawings\Instrumentation\I-07_1024012B.dwg, 7/9/2010 1:28:16 PM, Quint Shelton

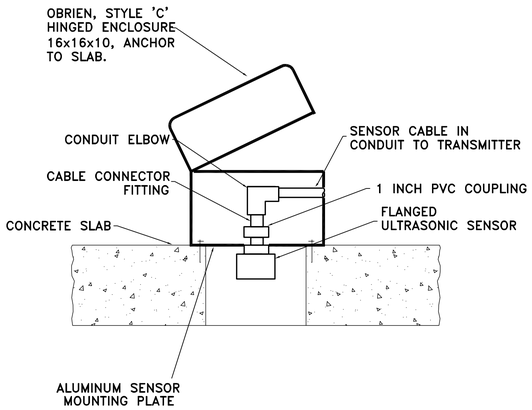

ULTRASONIC SENSOR MOUNTING
FOR ENCLOSED WETWELL DETAIL

NOTES:
1. SENSORS TO BE MOUNTED USING 'V' TYPE CONFIGURATION.
2. SENSOR SPACING PER MANUFACTURER INSTRUCTION.
3. UTILIZE SONIC COUPLING COMPOUND. COMPOUND TYPE SHALL BE SIL-GLYDE, DOW CORNING 111, GENERAL ELECTRIC RTV-108 OR APPROVED EQUAL.

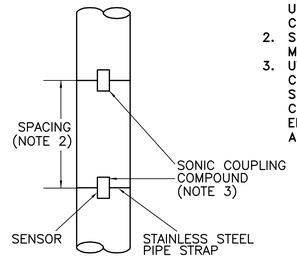

VERTICAL MOUNTING

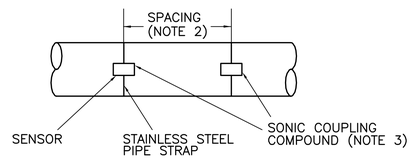

HORIZONTAL MOUNTING

TRANSIT TIME FLOW METER
SENSOR MOUNTING DETAIL

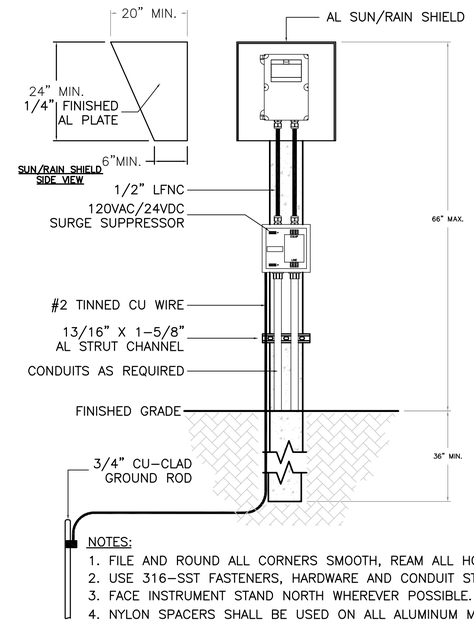

NOTES:
1. FILE AND ROUND ALL CORNERS SMOOTH, REAM ALL HOLES.
2. USE 316-SST FASTENERS, HARDWARE AND CONDUIT STRAPS.
3. FACE INSTRUMENT STAND NORTH WHEREVER POSSIBLE.
4. NYLON SPACERS SHALL BE USED ON ALL ALUMINUM MATERIALS IN CONTACT WITH CONCRETE OR COATED WITH BITUMASTIC PAINT.

INSTRUMENT STAND
CONCRETE POST DETAIL

REV.NO.	DESCRIPTIONS	DATE

REVISIONS

SEAL

THOMAS E. ROBINSON JR.
P.E. No. 62976

SEAL

McKIM&CREED
1365 Hamlet Avenue
Clearwater, Florida 33756
Phone: (727)442-7196, Fax: (727)461-3827
EB0006691
www.mckimcreed.com

MANATEE COUNTY, FLORIDA

SEWRF RECLAIMED WATER AUTOMATION

PROCESS AND INSTRUMENTATION DETAILS

DATE:	JULY 2010
MCE PROJ. #	1024-0129
DRAWN	EEB
DESIGNED	EEB
CHECKED	TER
PROJ. MGR.	MSL

SCALE
HORIZONTAL: NA
VERTICAL: NA

DRAWING NUMBER
I-8

STATUS: ISSUE FOR BID
REVISION

S:\1024\0129\06-Drawings\Instrumentation\I-08_1024012 9.dwg, 7/9/2010 4:14:10 PM, Quint Shelton

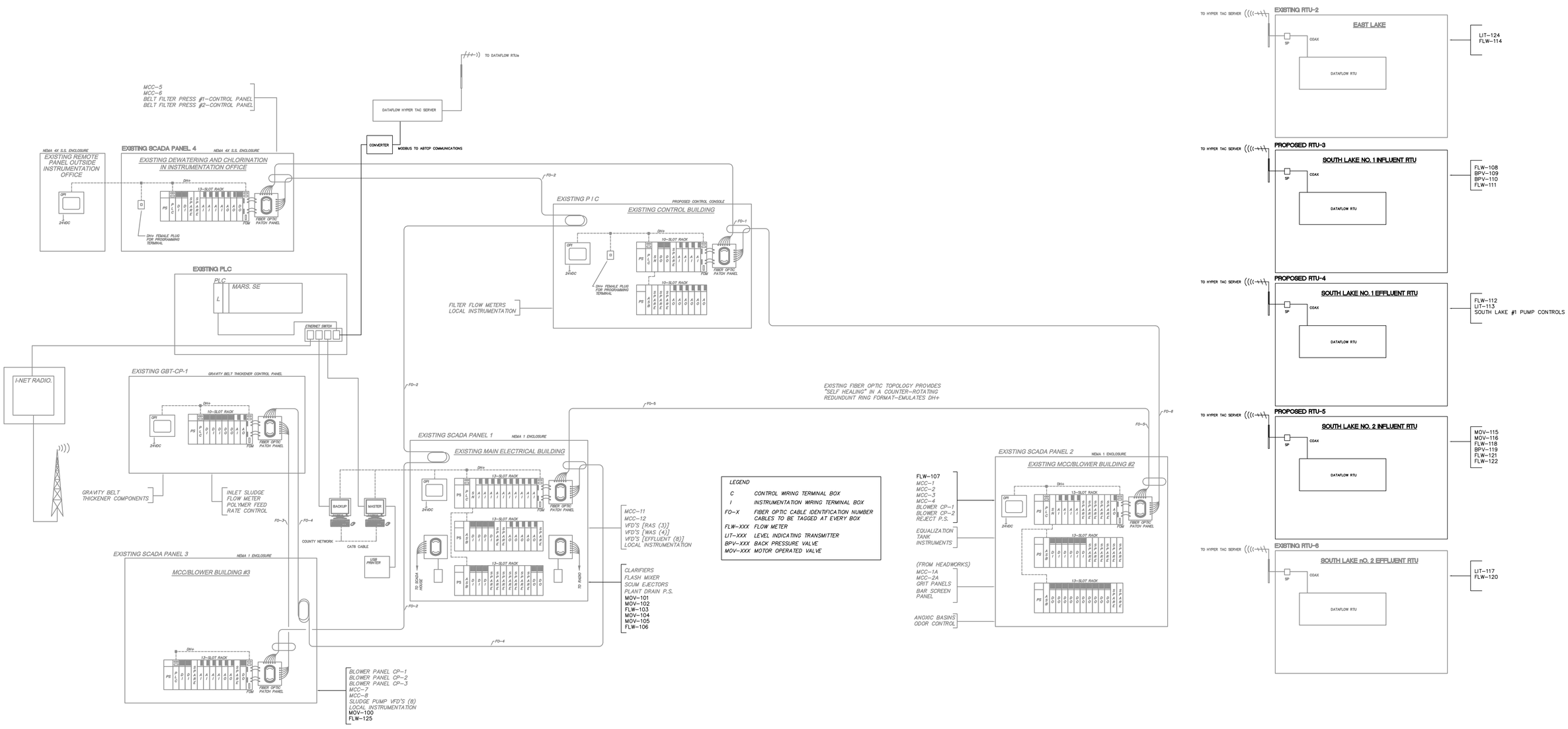

REV.NO.	DESCRIPTIONS	DATE

REVISIONS

SEAL

THOMAS E. ROBINSON JR.
P.E. No. 62976

SEAL

McKIM&CREED
1365 Hamlet Avenue
Clearwater, Florida 33756
Phone: (727)442-7196, Fax: (727)461-3827
EB0006691
www.mckimcreed.com

MANATEE COUNTY, FLORIDA

SEWRF RECLAIMED WATER AUTOMATION

COMMUNICATIONS SYSTEM OVERVIEW

DATE:	JULY 2010
MCE PROJ. #	1024-0129
DRAWN	EEB
DESIGNED	EEB
CHECKED	TER
PROJ. MGR.	MSL

SCALE
HORIZONTAL: NA
VERTICAL: NA

DRAWING NUMBER
I-9

STATUS: ISSUE FOR BID
REVISION

S:\1024\0129\80-Drawings\Instrumentation\I-09_1024012 9.dwg, 7/8/2010 8:45:34 AM, Quint Shelton

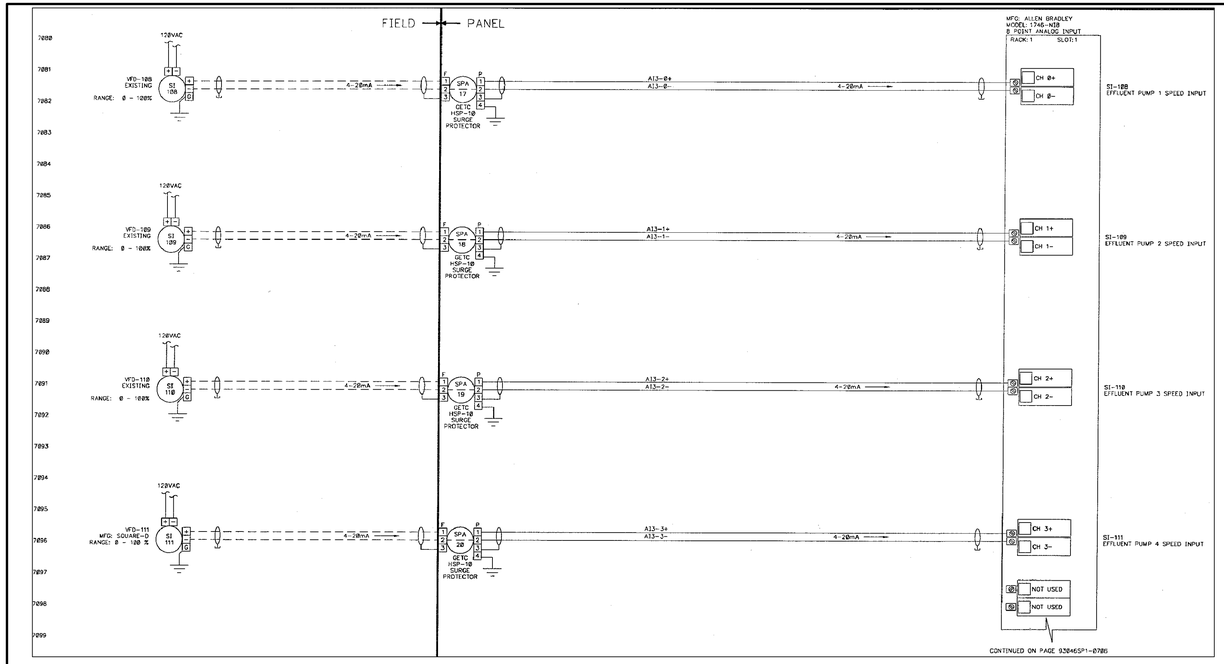

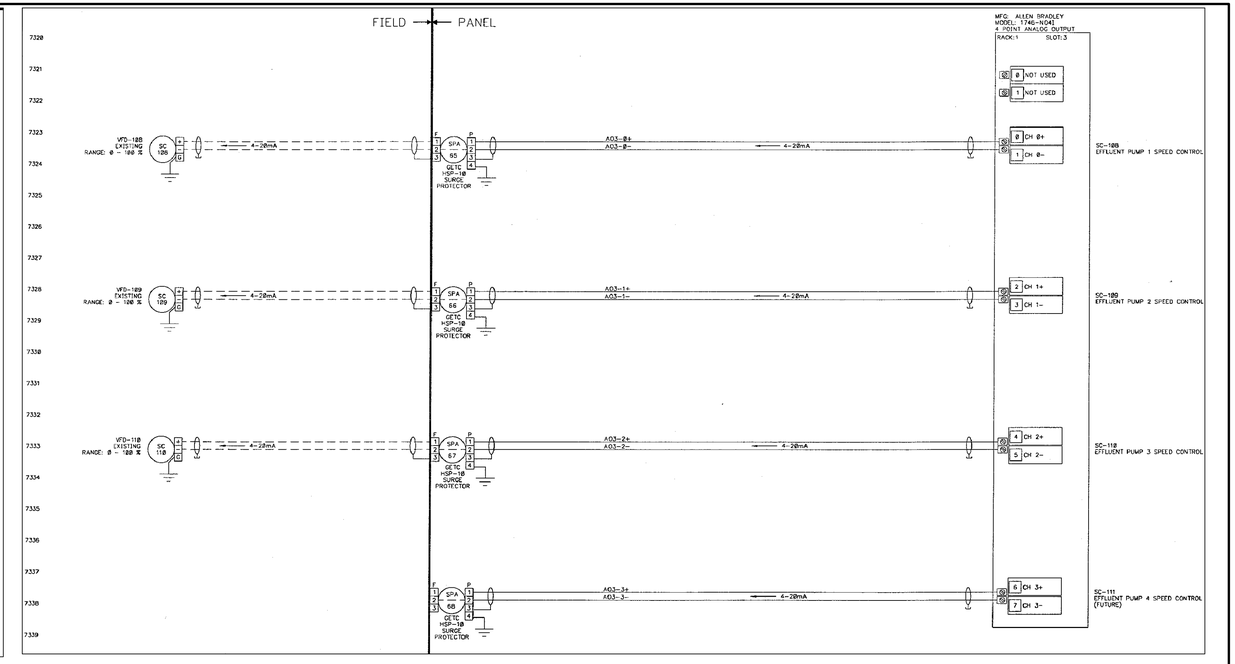

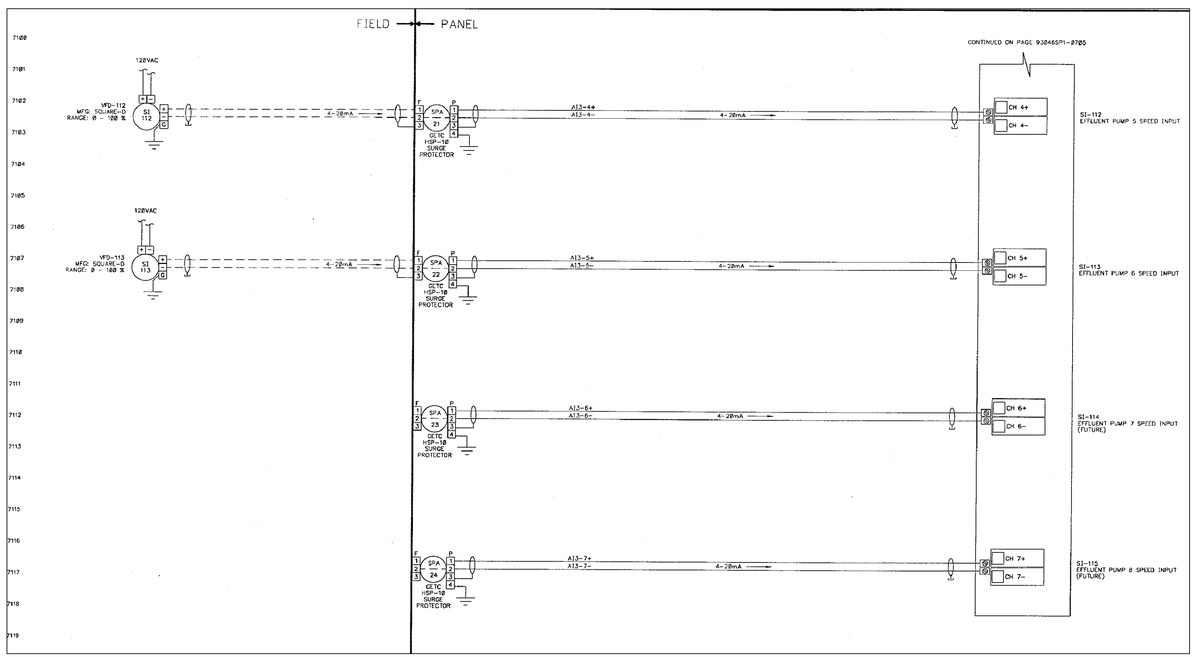

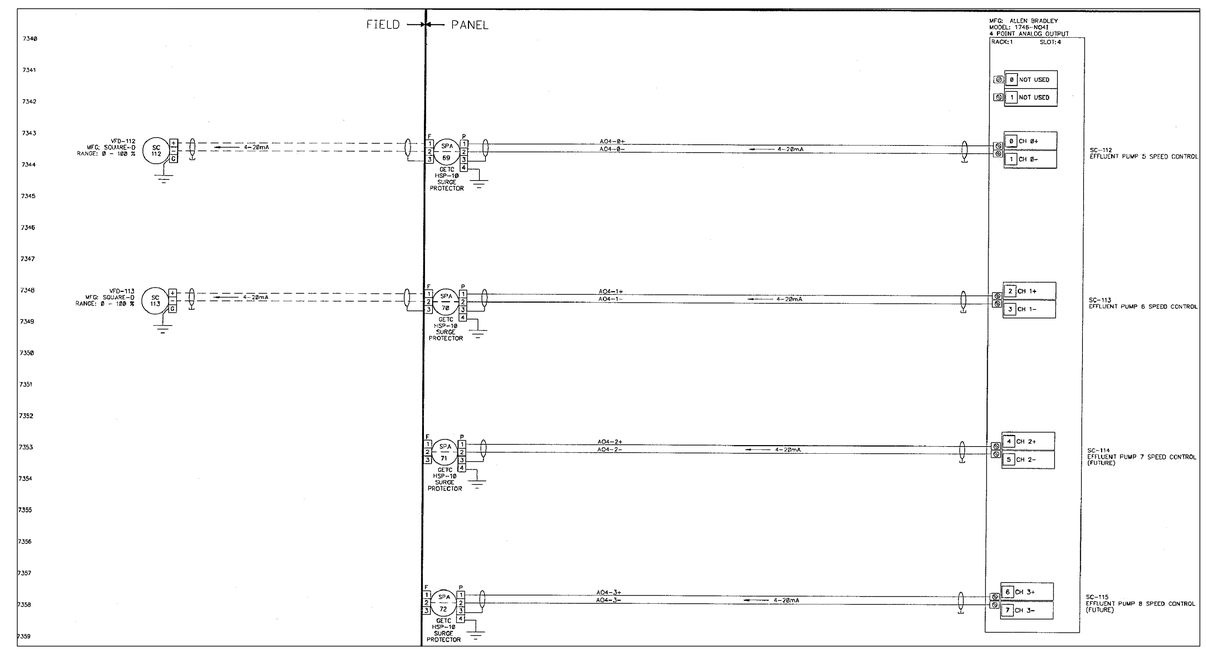

NOTES:

1. THE EFFLUENT VFD WIRING CONNECTIONS TO THE EXISTING SCADA PANEL SP-1 ARE SHOWN ABOVE. THE CONTRACTOR SHALL REMOVE THE EXISTING WIRING AND RE-TERMINATE ON THE NEW INSTALLED VFDs UTILIZING THE EXISTING WIRING. IN THE EVENT, THE WIRE LENGTHS ARE NOT LONG ENOUGH TO REACH THE NEW TERMINATION POINTS, THE CONTRACTOR SHALL INSTALL NEW WIRING OR INSTALL TERMINAL BLOCKS AND WIRING WITHIN THE NEW VFDs.
2. VFD NO. 1,2,3 & 6 ARE BEING REPLACED AS PART OF THIS PROJECT. REFERENCE THE WIRING FOR THOSE ONLY BEING REPLACED.

REV.NO.	DESCRIPTIONS	DATE

REVISIONS

SEAL

THOMAS E. ROBINSON JR.
P.E. No. 62976

SEAL

McKIM&CREED
1365 Hamlet Avenue
Clearwater, Florida 33756
Phone: (727)442-7196, Fax: (727)461-3827
EB0006691
www.mckimcreed.com

MANATEE COUNTY, FLORIDA

SEWRF RECLAIMED WATER AUTOMATION

EXISTING SCADA PANEL SP-1 DRAWINGS FOR VFD ANALOG INPUT AND ANALOG OUTPUT CONNECTIONS

DATE:	JULY 2010
MCE PROJ. #	1024-0129
DRAWN	EEB
DESIGNED	EEB
CHECKED	TER
PROJ. MGR.	MSL

SCALE
HORIZONTAL: NA
VERTICAL: NA

DRAWING NUMBER
I-10

STATUS: ISSUE FOR BID
REVISION

S:\1024\0129\90-Drawings\Instrumentation\I-0.10-1024012 9.dwg, 7/8/2010 8:44:17 AM, Quint Shelton

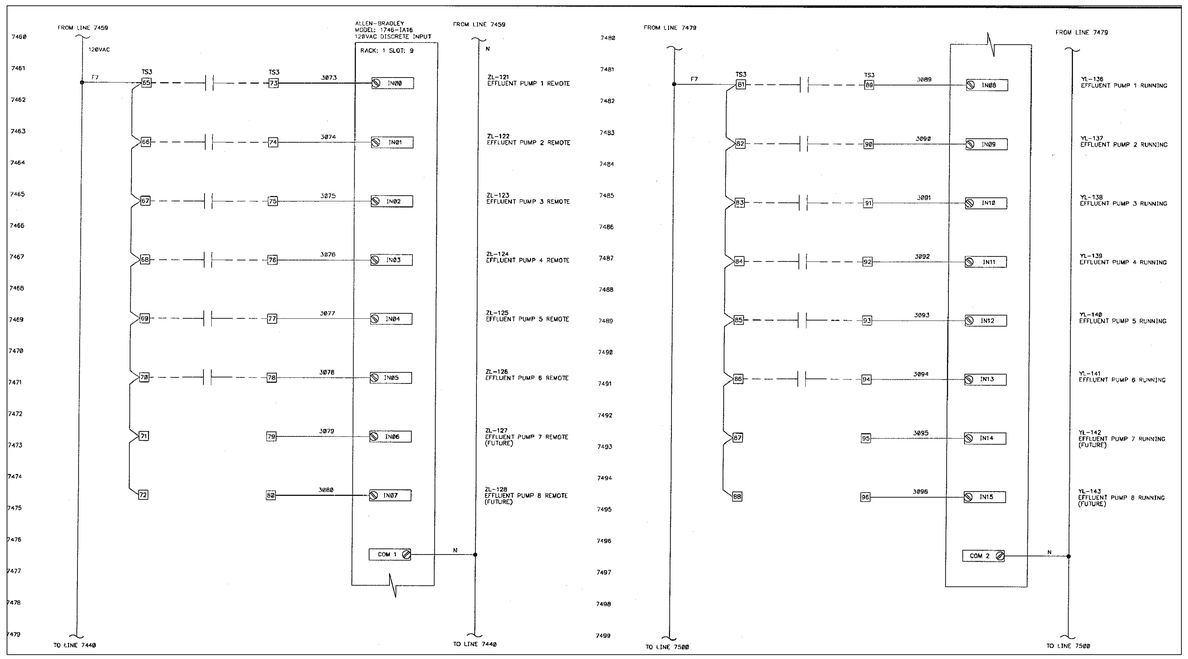

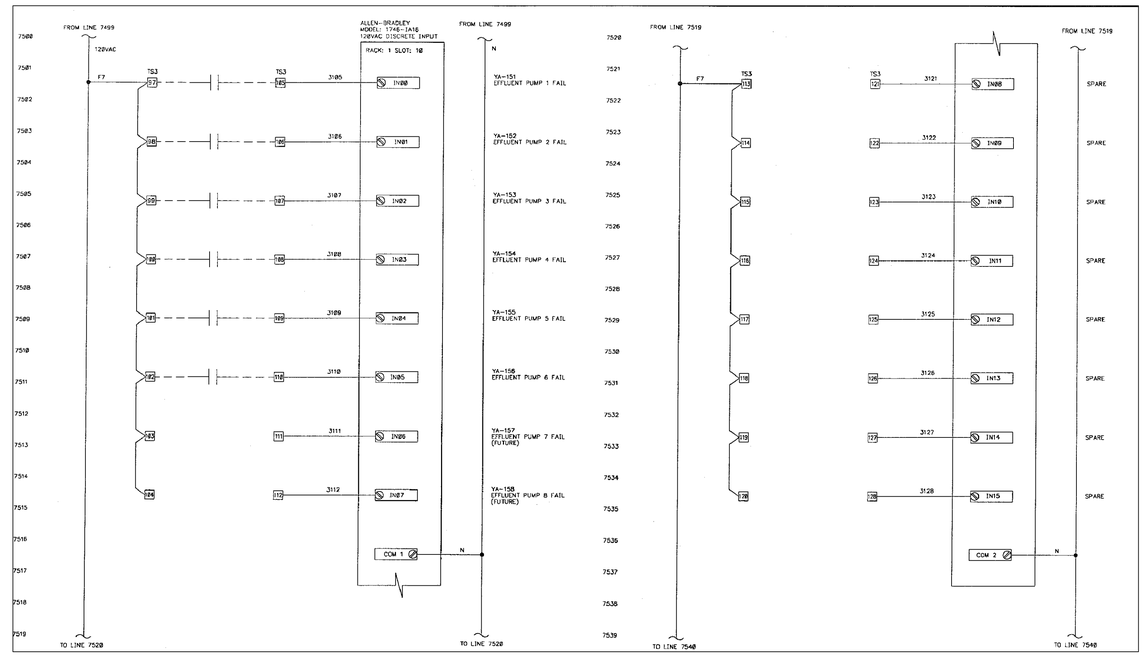

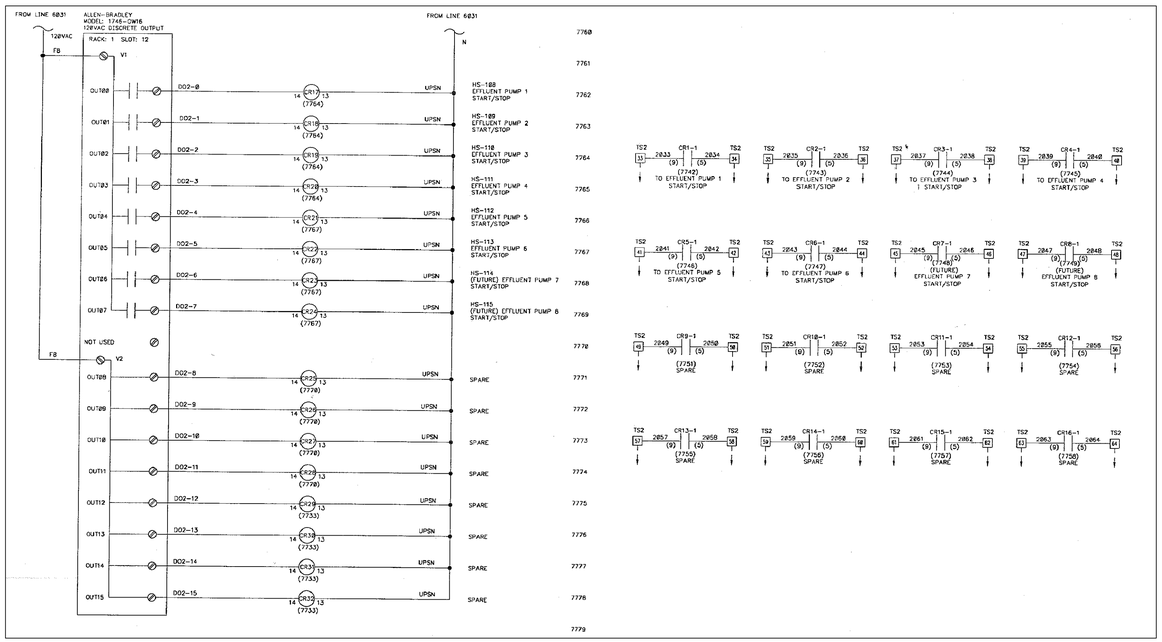

NOTES:

1. THE EFFLUENT VFD WIRING CONNECTIONS TO THE EXISTING SCADA PANEL SP-1 ARE SHOWN ABOVE. THE CONTRACTOR SHALL REMOVE THE EXISTING WIRING AND RE-TERMINATE ON THE NEW INSTALLED VFDs UTILIZING THE EXISTING WIRING. IN THE EVENT, THE WIRE LENGTHS ARE NOT LONG ENOUGH TO REACH THE NEW TERMINATION POINTS, THE CONTRACTOR SHALL INSTALL NEW WIRING OR INSTALL TERMINAL BLOCKS AND WIRING WITHIN THE NEW VFDs.

2. VFD NO. 1,2,3 & 6 ARE BEING REPLACED AS PART OF THIS PROJECT. REFERENCE THE WIRING FOR THOSE ONLY BEING REPLACED.

REV.NO.	DESCRIPTIONS	DATE
	REVISIONS	

SEAL

THOMAS E. ROBINSON JR.
P.E. No. 62976

SEAL

McKIM&CREED
1365 Hamlet Avenue
Clearwater, Florida 33756
Phone: (727)442-7196, Fax: (727)461-3827
EB0006691
www.mckimcreed.com

MANATEE COUNTY, FLORIDA

SEWRF RECLAIMED WATER AUTOMATION

EXISTING SCADA PANEL SP-1 DRAWINGS FOR VFD DISCRETE INPUT AND DISCRETE OUTPUT CONNECTIONS

DATE:	JULY 2010
MCE PROJ. #	1024-0129
DRAWN	EEB
DESIGNED	EEB
CHECKED	TER
PROJ. MGR.	MSL

SCALE
HORIZONTAL: NA
VERTICAL: NA

DRAWING NUMBER
I-11

STATUS: ISSUE FOR BID
REVISION

S:\1024\0129\90-Drawings\Instrumentation\I-011_1024012.dwg, 7/6/2010 8:44:28 AM, Quint Shelton

DEVICE SYMBOLS

- FS — FLOAT/FLOW SWITCH
- LS — LIMIT SWITCH
- PS — PRESSURE SWITCH
- T — THERMOSTAT
- PULL BOX, SIZE PER NEC
- JB — JUNCTION BOX, SIZE PER NEC
- E — ELECTRICAL EQUIPMENT CONNECTION
- GROUND ROD
- CONTROL STATION
- STOP–START STATION
- LOCK–OUT–STOP SWITCH
- R — RED STOPPED LIGHT
- FUSE
- MOTOR OL RELAY
- HEATER
- CLASS 1/DIVISION I/II CONDUIT SEAL–OFF FITTING
- LOCATED AT FIELD DEVICE
- LOCATED AT MAIN CONTROL PANEL
- LOCATED AT LOCAL CONTROL PANEL
- MOUNTED ON DOOR
- CIRCUIT BREAKER
- A — AMMETER
- AS — AMMETER SWITCH
- V — VOLTMETER
- VS — VOLTMETER SWITCH
- HP — MOTOR (HP=RATED HORSEPOWER)
- VACUUM STARTER
- 52 — ANSI/IEEE TYPE–52 AC POWER CIRCUIT BREAKER
- INDUSTRIAL BATTERY SET W/MOUNTING RACK
- PM — POWER MONITOR
- 27 — UNDER VOLTAGE
- 46 — PHASE UNBALANCE
- 48 — INCOMPLETE SEQUENCE
- 49 — OVER TEMPERATURE
- 51 — TIMED OVERCURRENT
- 51G — TIMED GROUND FAULT
- 74 — ALARM RELAY
- 81 — FREQUENCY
- 86 — LOCK OUT
- 87 — DIFFERENTIAL
- E110 — DUCTBANK CALLOUT
- 042000 — CONDUIT OR CABLE NUMBER

GENERAL ELECTRICAL SYMBOLS

- LP–3 — CONDUIT HOMERUN TO EQUIPMENT SHOWN. LINE TYPE DESIGNATES CONCEALED, EXPOSED, ETC. NUMBERS/TEXT DESIGNATE HOMERUN EQUIPMENT (I.E. PANEL BOARD CIRCUIT NUMBER).
- GENERAL CONDUIT RUN EXPOSED
- CONCEALED CONDUIT IN FLOOR SLAB, UNDERGROUND, ETC.
- EXISTING CABLE OR CONDUIT
- CONDUIT TURNED DOWN
- CONDUIT TURNED UP
- E — SITE ELECTRICAL
- E — EXISTING SITE ELECTRICAL
- T — SITE TELEPHONE
- T — EXISTING SITE TELEPHONE
- OHE — OVERHEAD ELECTRICAL UTILITY
- OHT — OVERHEAD TELEPHONE UTILITY
- UGE — UNDERGROUND ELECTRICAL UTILITY
- UGT — UNDERGROUND TELEPHONE UTILITY
- G — SITE GROUND
- G — EXISTING SITE GROUND
- ELECTRICAL INTERLOCK
- ELECTRICAL BUSS
- ELECTRICAL BUSS DUCT
- 0A 0F 3R — DISCONNECT SWITCH. TOP NUMBER DENOTES FUSE SIZE (NF=NON–FUSED). BOTTOM NUMBER DENOTES FRAME SIZE. RIGHT NUMBER DENOTES NEMA ENCLOSURE RATING.
- CB 0A 0F 3R — CIRCUIT BREAKER. TOP NUMBER DENOTES TRIP. BOTTOM NUMBER DENOTES FRAME SIZE. RIGHT NUMBER DENOTES NEMA ENCLOSURE RATING.
- 2 0A 0F 3R — COMBINATION MAGNETIC MOTOR STARTER AND DISCONNECT SWITCH OR MOTOR CIRCUIT PROTECTOR. LEFT NUMBER DENOTES NEMA STARTER SIZE. TOP NUMBER DENOTES FUSE SIZE OR MCP. BOTTOM NUMBER DENOTES FRAME SIZE. RIGHT NUMBER DENOTES NEMA ENCLOSURE.
- 3 FVNR — FULL VOLTAGE NON–REVERSING MOTOR STARTER. LEFT NUMBER DENOTES NEMA STARTER SIZE.
- RVSS — REDUCED VOLTAGE SOLID–STATE MOTOR STARTER.
- VFD — VARIABLE FREQUENCY MOTOR CONTROLLER.
- $^{a}_{4}$ — LIGHTING CONTROL SWITCH: {LOWERCASE LETTER} – CONTROL SWITCHING

  M – MOTOR RATED SWITCH 3 – THREE–WAY SWITCHING
  D – DIMMER CONTROL 4 – FOUR–WAY SWITCHING
  OS – OCCUPANCY SENSOR

OUTLETS: NUMBER DENOTES PANEL BOARD CIRCUIT FOR POWER OUTLETS. IF SHOWN, LOWERCASE LETTER DENOTES CONTROL SWITCHING FOR POWER OUTLETS.

- SIMPLEX RECEPTACLE.
- DUPLEX RECEPTACLE.
- QUADRAPLEX RECEPTACLE.
- VOICE (PHONE) OUTLET.
- DATA OUTLET.
- VOICE/DATA COMBINATION OUTLET.

LIGHTING SYMBOLS

- PP–C/1 B1:a — LIGHT FIXTURES (VARIOUS TYPES) – UPPERCASE LETTER DENOTES FIXTURE TYPE, REFER TO LIGHTING SCHEDULE OR NOTES. NUMBER DENOTES LIGHTING PANEL CIRCUIT. LOWERCASE LETTER DENOTES CONTROL SWITCH.
- PP–C/3 E2 — EMERGENCY LIGHT – BATTERY EQUIPPED, CIRCUIT AHEAD OF CONTROL SWITCHES. ADDITIONAL FIXTURE HEADS MAY BE SHOWN CONNECTED TO UNIT.
- PP–C/1 E3 — EMERGENCY EXIT LIGHT – BATTERY EQUIPPED.
- PC — PHOTOELECTRIC CONTROL DEVICE
- LC — LIGHTING CONTACTOR

TYPICAL ABBREVIATIONS

A, AMP	AMPERE
AFD	ADJUSTABLE FREQUENCY DRIVE
AFG	ABOVE FINISHED GRADE
AIT	ANALYTICAL INDICATION TRANSMITTER
AHU	AIR HANDLING UNIT
AIC	AMPERE INTERRUPTING CAPACITY
AL	ALUMINUM
ATS	AUTOMATIC TRANSFER SWITCH
BKR	BREAKER
C	CONDUIT
CAB	CABINET
CAT	CATALOG
CL	CHLORINE
CB	CIRCUIT BREAKER
CCTV	CLOSED CIRCUIT TELEVISION
CKT	CIRCUIT
CLG	CEILING
CP	CONTROL PANEL
CR	CONTROL RELAY, CORROSION RESISTANT
CS	CONTROL SWITCH
CV	CONTROL VALVE
CT	CURRENT TRANSFORMER
CU	COPPER
EF	EXHAUST FAN
EMER	EMERGENCY
EMT	ELECTRICAL METALLIC TUBING
ENCL	ENCLOSURE
EQUIP	EQUIPMENT
EWC	ELECTRIC WATER COOLER
EWH	ELECTRIC WATER HEATER
EPRF	EXPLOSION PROOF
FA	FIRE ALARM
FAAP	FIRE ALARM ANNUNCIATOR PANEL
FACP	FIRE ALARM CONTROL PANEL
FBO	FURNISHED BY OTHERS
FLA	FULL LOAD AMPS
FVNR	FULL VOLTAGE NON–REVERSING STARTER
FLOUR	FLUORESCENT
FLR	FLOOR
FMC	FLEXIBLE METAL CONDUIT
FWE	FURNISHED WITH EQUIPMENT
GEN	GENERATOR
G, GND	GROUND
GFIC	GROUND FAULT CIRCUIT INTERRUPTER
HH	HANDHOLE
HID	HIGH INTENSITY DISCHARGE
HOA	HAND–OFF–AUTO
HP	HORSE POWER
HPF	HIGH POWER FACTOR
HPS	HIGH PRESSURE SODIUM
HTR	HEATER
HV	HIGH VOLTAGE
Hz	HERTZ
IMC	INTERMEDIATE METALLIC CONDUIT (GALVANIZED)
INCAND	INCANDESCENT
JB	JUNCTION BOX
k	THOUSAND
kCMIL	THOUSAND CIRCULAR MILLS
kA	KILOVOLT AMPERE
kW	KILOWATTS
kWH	KILOWATT–HOURS
LFMC	LIQUIDTIGHT FLEXIBLE METAL CONDUIT
LFNC	LIQUIDTIGHT FLEXIBLE NONMETALLIC CONDUIT
LIT	LEVEL INDICATION TRANSMITTER
LP	LIGHTING PANEL, LIGHT POLE
LTG	LIGHTING
MCB	MAIN CIRCUIT BREAKER
MCC	MOTOR CONTROL CENTER
MCP	MOTOR CIRCUIT PROTECTOR
MDP	MAIN DISTRIBUTION PANEL
MFR	MANUFACTURER
MH	MANHOLE
MLO	MAIN LUGS ONLY
MSB	MAIN SWITCHBOARD
MTD	MOUNTED/MOUNTING
MTS	MANUAL TRANSFER SWITCH
MV	MEDIUM VOLTAGE
NEC	NATIONAL ELECTRIC CODE
N, NEU	NEUTRAL
NA	NOT APPLICABLE
NC	NORMALLY CLOSE
NO	NORMALLY OPEN
NIC	NOT IN CONTRACT
NTS	NOT TO SCALE
P	POLE
PA	PUBLIC ADDRESS
PB	PULL BOX, PUSH–BUTTON
PCP	PUMP CONTROL PANEL
PF	POWER FACTOR
ϕ, PH	PHASE
PIT	PRESSURE INDICATION TRANSMITTER
PLC	PROGRAMMABLE LOGIC CONTROLLER
PNL	PANEL
PP	POWER PANEL, POWER POLE
PT	POTENTIAL TRANSFORMER
PWR	POWER
RECEP	RECEPTACLE
RVSS	REDUCED VOLTAGE SOFT STARTER
REQ	REQUIRED
RM	ROOM
RMC	RIGID METAL CONDUIT (GALVANIZED)
RTU	REMOTE TELEMETRY UNIT
SCR	DC MOTOR DRIVE
SH	SHEET
SPEC	SPECIFICATION
SS	SELECTOR SWITCH
SST.	STAINLESS STEEL
STP	SHIELDED TWISTED PAIR
SW	SWITCH
SWBD	SWITCHBOARD
SWGR	SWITCH GEAR
TEL	TELEPHONE
TVSS	TRANSIENT VOLTAGE SURGE SUPPRESSER
TYP	TYPICAL
UG	UNDERGROUND
UH	UNIT HEATER
UON	UNLESS OTHERWISE NOTED
UTIL	UTILITY
UTP	UNSHIELDED TWISTED PAIR
V	VOLTS
VFD	VARIABLE FREQUENCY DRIVE
W	WIRE, WATT
WH	WATT–HOUR
WP	WEATHERPROOF
XFMR	TRANSFORMER

GENERAL NOTES

1. REFERENCE ALL SPECIFICATIONS AND CONTRACT DRAWINGS FOR ADDITIONAL REQUIREMENTS AND CONTRACT RESPONSIBILITIES PRIOR TO COMMENCING WORK.
2. THE GENERAL NOTES STATED ON THIS DRAWING ARE APPLICABLE TO ALL ELECTRICAL WORK UNLESS NOTED OTHERWISE.
3. ALL ELECTRICAL WORK SHALL COMPLY WITH THE CURRENT NEC, NESC AND LOCAL CODES INCLUDING OWNERS STANDARDS AND REQUIREMENTS.
4. THE ELECTRICAL INSTALLATION SHALL COMPLY THE REQUIREMENTS OF NECA–1 2006: (STANDARD PRACTICES FOR GOOD WORKMANSHIP IN ELECTRICAL CONSTRUCTION).
5. THE SCHEDULING AND DURATION OF ANY SHUTDOWN OF ANY PLANT PROCESS FOR THE REMOVAL OF EXISTING EQUIPMENT OR INSTALLATION OF NEW EQUIPMENT SHALL BE COORDINATED IN ADVANCE WITH THE OWNER.
6. ALL SYMBOLS AND ABBREVIATION MAY NOT BE UTILIZED FOR THIS PROJECT.
7. ADDITIONAL SYMBOLS NOT SHOWN ON THIS DRAWING MAY BE SHOWN ELSEWHERE ON THE ELECTRICAL DRAWINGS.
8. ELECTRICAL DRAWINGS SHOW MAJOR CABLE AND CONDUIT REQUIREMENTS. REFERENCE EQUIPMENT SPECIFICATIONS FOR ADDITIONAL REQUIREMENTS.
9. ALL 480V ELECTRICAL EQUIPMENT SHALL HAVE A MINIMUM RATING OF 22K AIC.
10. ALL ELECTRICAL EQUIPMENT SHALL BE INSTALLED SO THAT ALL CODE–REQUIRED AND MANUFACTURER–RECOMMENDED SERVICING CLEARANCES ARE MAINTAINED. INSTALLATIONS SHALL COMPLY WITH NEC 110–26 FOR CLEARANCE REQUIREMENTS.
11. ALL POWER AND CONTROL WIRING OR CABLES SHALL BE 600V RATED XHHW–2 STRANDED COPPER, UNLESS OTHERWISE NOTED ON DRAWINGS.
12. ALL AMPACITIES ARE BASED ON 75°C RATING. THE CONTRACTOR IS RESPONSIBLE FOR THE INCREASING OF CONDUCTOR SIZES AS NECESSARY TO MEET THE REQUIREMENTS OF NEC 110–14(C) WHERE TERMINATIONS ARE NOT LISTED AND LABELED FOR USE AT 75°C. THIS REQUIREMENT APPLIES TO TERMINATIONS IN BOTH NEW EQUIPMENT AND IN EXISTING EQUIPMENT TO WHICH TERMINATIONS ARE MADE AS PART OF THIS PROJECT.
13. NO SPLICES OR JUNCTIONS TO FEEDER CABLES SHALL BE MADE WITHOUT ENGINEERS APPROVAL.
14. ALL EXPOSED CONDUIT SHALL BE RIGID ALUMINUM.
15. ALL CONDUIT INSTALLED BELOW GRADE SHALL BE NON–REINFORCED CONCRETE DUCTBANK; REFERENCE DETAIL SHEETS.
16. ALL DUCTBANKS CROSSING ROADWAYS SHALL BE REINFORCED CONCRETE AND EXTEND 5–FEET FROM EDGE OF PAVEMENT. DUCTBANKS SHALL CROSS PROCESS PIPING AT 90° ANGLE WHERE POSSIBLE. REFERENCE DETAIL SHEETS.
17. ALL CONDUIT TRANSITIONS THROUGH FINISHED GRADE OR CONCRETE SHALL BE ALUMINUM WITH HEAVY WALL HEAT–SHRINKABLE TUBING 6" MIN. ABOVE AND BELOW TRANSITION.
18. ROUGH–IN CONDUIT AS REQUIRED FOR DIRECT CONNECTION TO EQUIPMENT AS SHOWN. PROVIDE FLEXIBLE CONNECTIONS TO ALL EQUIPMENT AND MAKE ALL CONNECTIONS COMPLETE AND IN ACCORDANCE WITH THE SPECIFICATIONS.
19. ALL CONDUIT SHALL RUN CONCEALED UNLESS OTHERWISE NOTED OR SHOWN. THE CONDUITS SHALL RUN PARALLEL TO LANDSCAPE AND STRUCTURAL FEATURES, AND THE BENDS AND TURNS SHALL BE MADE BY MEANS OF CONDUIT FITTINGS. MOST CONDUIT LAYOUTS ARE NOT AS SHOWN ON THE PLANS. THE CONTRACTOR SHALL PROPOSE LOGICAL GROUPINGS, MARSHALLING AND ROUTING OF CONDUITS AND WIRING FOR APPROVAL BY ENGINEER PRIOR TO INSTALLATION.
20. THE CONTRACTOR SHALL PROVIDE ALL REQUIRED PULL BOXES, TERMINAL BOXES AND JUNCTION BOXES FOR INSTALLATION OF THE WIRING IN ACCORDANCE WTH THE CONTRACT SPECIFICATIONS THOUGH THE BOXES MAY NOT BE INDICATED ON THE DRAWINGS.
21. CONDUIT AND WIRING FOR LIGHTING, RECEPTACLES AND OTHER SINGLE PHASE POWERED DEVICES ARE GENERALLY NOT SHOWN BUT SHALL BE PROVIDED AS REQUIRED FOR PROPER SERVICE. MULTI–PHASE CIRCUITS SHALL BE PROVIDED WITH DEDICATED NEUTRAL CONDUCTORS.
22. ALL SPARE CONDUITS SHALL BE CAPPED OR PLUGGED AND SHALL INCLUDE 200# TEST POLYPROPYLENE PULL STRING.
23. STRUT–CHANNEL SHALL NOT BE BENT, DRILLED, CUT OR OTHERWISE MODIFIED TO PRODUCE FITTINGS, BRACES OR BRACKETS FOR CONDUIT AND EQUIPMENT SUPPORTS.
24. MANUFACTURED STRUT–CHANNEL BRACES, BRACKETS, FITTINGS OR POST BASES SHALL BE PROVIDED AND INSTALLED WITH ASSOCIATED HARDWARE AND FASTENERS FOR CONDUIT AND EQUIPMENT SUPPORTS.
25. CONTRACTOR SHALL PROVIDE AUXILIARY SUPPORTS FOR SWITCHBOARDS, PANELBOARDS, TRANSFORMERS, CONTROL PANELS, ETC., AS REQUIRED.
26. CONTRACTOR SHALL PROVIDE AND INSTALL CONCRETE EMBEDDED LEVELING CHANNEL SUPPORTS FOR FLOOR MOUNTED EQUIPMENT.
27. STRUCTURAL MEMBERS SHALL NOT BE DRILLED, CUT, WELDED OR OTHERWISE MODIFIED WITHOUT PRIOR APPROVAL OF THE ENGINEER OF RECORD.
28. ALL NEW EQUIPMENT SHALL FIT INTO EXISTING AVAILABLE SPACE. IT IS THE RESPONSIBILITY OF THE CONTRACTOR TO PROVIDE EQUIPMENT WHICH MEETS THE SPACE REQUIREMENTS.
29. THE WIRING DIAGRAMS, QUANTITY AND SIZE OF WIRES AND CONDUITS ARE BASED UPON SELECTED STANDARD COMPONENTS OF ELECTRICAL EQUIPMENT. MODIFICATIONS APPROVED BY THE ENGINEER MAY BE MADE BY THE CONTRACTOR AT HIS EXPENSE TO ACCOMMODATE EQUIPMENT ACTUALLY PURCHASED.
30. THE CONTRACTOR SHALL PROVIDE ALL NECESSARY COMPONENTS REQUIRED FOR MAKING FINAL CONNECTION OF ALL EQUIPMENT INSTALLED OR MODIFIED AS PART OF THIS CONTRACT.
31. NOT ALL MOISTURE AND HAZARDOUS AREA CONDUIT SEALS ARE SHOWN ON THE DRAWINGS. IT IS THE CONTRACTOR'S RESPONSIBILITY TO CONFIRM WITH THE CODE, SPECIFICATION, AND DRAWING REQUIREMENTS FOR THEIR LOCATION.
32. CONTRACTOR SHALL PROVIDE BLACK TEXT ON WHITE HEAT–SHRINKABLE CABLE/WIRE IDENTIFICATION LABEL AT BOTH ENDS OF POWER, CONTROL AND DATA WIRING.
33. GROUND FAULT CURRENT INTERRUPTING (GFCI) RECEPTACLES:
    A. SHALL BE RATED FOR 20A AT 120V WITH LED POWER INDICATOR
    B. INSTALLED IN INTERIOR SPACES WHERE EXPOSED TO WATER SOURCES SUCH AS TOILET ROOMS, SHOWER AREAS, KITCHENS, ETC., INDIVIDUAL GFCI RECEPTACLES SHALL BE PROVIDED.
    C. INSTALLED OUTDOORS OR IN PROCESS AREAS, ALL RECEPTACLES SHALL BE WEATHER PROOF, CORROSION RESISTANT, AND SHALL BE INDIVIDUAL GFCI DEVICES.

TYPICAL DEVICE MOUNTING HEIGHTS

RECEPTACLES (INTERIOR PROCESS AREAS)	16" AFF
RECEPTACLES (EXTERIOR PROCESS AREAS)	48" AFF
LIGHT SWITCHES	48" AFF
PHONE OUTLETS	16" AFF
PHONE OUTLETS (WALL MOUNT)	64" AFF
DATA OUTLETS	16" AFF
FIRE ALARM PULL STATION	48" AFF
FIRE ALARM AUDIO/VISUAL ALARM	80" AFF
FIRE ALARM VISUAL ALARM ONLY	80" AFF
EXIT LIGHTS (WALL MOUNT)	16" ABOVE DOOR
EMERGENCY LIGHTS (WALL MOUNT)	96" AFF

NOTE: DIMENSIONS ARE TO DEVICE TOP UNLESS NOTED OTHERWISE.

REV.NO.	DESCRIPTIONS	DATE

REVISIONS

SEAL

ARTHUR L. ANCHORS, P.E.
PROFESSIONAL ENGINEER NO. 39804
STATE OF FLORIDA

SEAL

McKIM&CREED
1365 Hamlet Avenue
Clearwater, Florida 33756
Phone: (727)442–7196, Fax: (727)461–3827
EB0006691
www.mckimcreed.com

MANATEE COUNTY, FLORIDA

SEWRF RECLAIMED WATER AUTOMATION AND VFD REPLACEMENT

ELECTRICAL GENERAL NOTES, LEGENDS AND ABBREVIATIONS

DATE:	JULY 2010
MCE PROJ. #	1024–0129
DRAWN	BMW
DESIGNED	BMW
CHECKED	ALA
PROJ. MGR.	MSL

SCALE
HORIZONTAL: NA
VERTICAL: NA

DRAWING NUMBER
E-1

STATUS: ISSUE FOR BID
REVISION

S:\1024\0129\06-Drawings\Electrical\E01_1024012B.dwg, 7/8/2010 10:41:10 AM, Brad Wynne

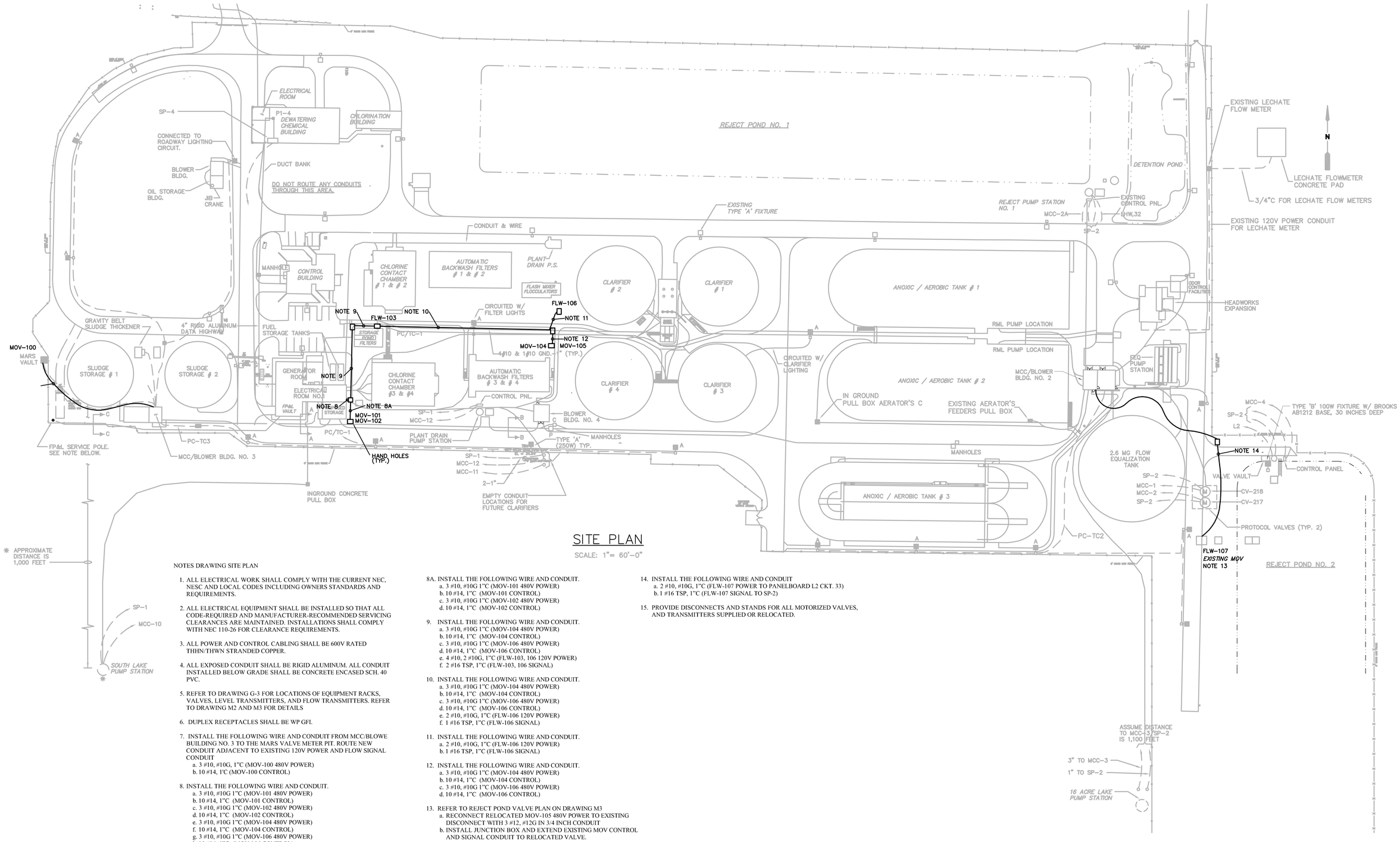

SITE PLAN

SCALE: 1"= 60'-0"

NOTES DRAWING SITE PLAN

1. ALL ELECTRICAL WORK SHALL COMPLY WITH THE CURRENT NEC, NESC AND LOCAL CODES INCLUDING OWNERS STANDARDS AND REQUIREMENTS.

2. ALL ELECTRICAL EQUIPMENT SHALL BE INSTALLED SO THAT ALL CODE-REQUIRED AND MANUFACTURER-RECOMMENDED SERVICING CLEARANCES ARE MAINTAINED. INSTALLATIONS SHALL COMPLY WITH NEC 110-26 FOR CLEARANCE REQUIREMENTS.

3. ALL POWER AND CONTROL CABLING SHALL BE 600V RATED THHN/THWN STRANDED COPPER.

4. ALL EXPOSED CONDUIT SHALL BE RIGID ALUMINUM. ALL CONDUIT INSTALLED BELOW GRADE SHALL BE CONCRETE ENCASED SCH. 40 PVC.

5. REFER TO DRAWING G-3 FOR LOCATIONS OF EQUIPMENT RACKS, VALVES, LEVEL TRANSMITTERS, AND FLOW TRANSMITTERS. REFER TO DRAWING M2 AND M3 FOR DETAILS

6. DUPLEX RECEPTACLES SHALL BE WP GFI.

7. INSTALL THE FOLLOWING WIRE AND CONDUIT FROM MCC/BLOWE BUILDING NO. 3 TO THE MARS VALVE METER PIT. ROUTE NEW CONDUIT ADJACENT TO EXISTING 120V POWER AND FLOW SIGNAL CONDUIT
   a. 3 #10, #10G, 1"C (MOV-100 480V POWER)
   b. 10 #14, 1'C (MOV-100 CONTROL)

8. INSTALL THE FOLLOWING WIRE AND CONDUIT.
   a. 3 #10, #10G 1"C (MOV-101 480V POWER)
   b. 10 #14, 1"C (MOV-101 CONTROL)
   c. 3 #10, #10G 1"C (MOV-102 480V POWER)
   d. 10 #14, 1"C (MOV-102 CONTROL)
   e. 3 #10, #10G 1"C (MOV-104 480V POWER)
   f. 10 #14, 1"C (MOV-104 CONTROL)
   g. 3 #10, #10G 1"C (MOV-106 480V POWER)
   h. 10 #14, 1"C (MOV-106 CONTROL)
   i. 4 #10, 2 #10G, 1"C (FLW-103, 106 120V POWER)
   j. 2 #16 TSP, 1"C (FLW-103, 106 SIGNAL)

8A. INSTALL THE FOLLOWING WIRE AND CONDUIT.
   a. 3 #10, #10G 1"C (MOV-101 480V POWER)
   b. 10 #14, 1"C (MOV-101 CONTROL)
   c. 3 #10, #10G 1"C (MOV-102 480V POWER)
   d. 10 #14, 1"C (MOV-102 CONTROL)

9. INSTALL THE FOLLOWING WIRE AND CONDUIT.
   a. 3 #10, #10G 1"C (MOV-104 480V POWER)
   b. 10 #14, 1"C (MOV-104 CONTROL)
   c. 3 #10, #10G 1"C (MOV-106 480V POWER)
   d. 10 #14, 1"C (MOV-106 CONTROL)
   e. 4 #10, 2 #10G, 1"C (FLW-103, 106 120V POWER)
   f. 2 #16 TSP, 1"C (FLW-103, 106 SIGNAL)

10. INSTALL THE FOLLOWING WIRE AND CONDUIT.
   a. 3 #10, #10G 1"C (MOV-104 480V POWER)
   b. 10 #14, 1"C (MOV-104 CONTROL)
   c. 3 #10, #10G 1"C (MOV-106 480V POWER)
   d. 10 #14, 1"C (MOV-106 CONTROL)
   e. 2 #10, #10G, 1"C (FLW-106 120V POWER)
   f. 1 #16 TSP, 1"C (FLW-106 SIGNAL)

11. INSTALL THE FOLLOWING WIRE AND CONDUIT.
   a. 2 #10, #10G, 1"C (FLW-106 120V POWER)
   b. 1 #16 TSP, 1"C (FLW-106 SIGNAL)

12. INSTALL THE FOLLOWING WIRE AND CONDUIT.
   a. 3 #10, #10G 1"C (MOV-104 480V POWER)
   b. 10 #14, 1"C (MOV-104 CONTROL)
   c. 3 #10, #10G 1"C (MOV-106 480V POWER)
   d. 10 #14, 1"C (MOV-106 CONTROL)

13. REFER TO REJECT POND VALVE PLAN ON DRAWING M3
   a. RECONNECT RELOCATED MOV-105 480V POWER TO EXISTING DISCONNECT WITH 3 #12, #12G IN 3/4 INCH CONDUIT
   b. INSTALL JUNCTION BOX AND EXTEND EXISTING MOV CONTROL AND SIGNAL CONDUIT TO RELOCATED VALVE.

14. INSTALL THE FOLLOWING WIRE AND CONDUIT
   a. 2 #10, #10G, 1"C (FLW-107 POWER TO PANELBOARD L2 CKT. 33)
   b. 1 #16 TSP, 1"C (FLW-107 SIGNAL TO SP-2)

15. PROVIDE DISCONNECTS AND STANDS FOR ALL MOTORIZED VALVES, AND TRANSMITTERS SUPPLIED OR RELOCATED.

REV.NO.	DESCRIPTIONS	DATE

REVISIONS

SEAL

ARTHUR L. ANCHORS, P.E.
PROFESSIONAL ENGINEER NO. 39804
STATE OF FLORIDA

SEAL

McKIM&CREED
1365 Hamlet Avenue
Clearwater, Florida 33756
Phone: (727)442-7196, Fax: (727)461-3827
EB0006691
www.mckimcreed.com

MANATEE COUNTY, FLORIDA

MANATEE COUNTY, FLORIDA

SEWRF RECLAIMED WATER AUTOMATION AND VFD REPLACEMENT

ELECTRICAL SITE LAYOUT

DATE:	JULY 2010
MCE PROJ. #	1024-0129
DRAWN	BMW
DESIGNED	BMW
CHECKED	ALA
PROJ. MGR.	MSL

SCALE
HORIZONTAL: 1" = 60'
VERTICAL: NA

DRAWING NUMBER
E-2

STATUS: ISSUE FOR BID
REVISION

S:\1024\01129\80-Drawings\Electrical\002_1024012B.dwg, 7/8/2010 10:41:14 AM, Brad Wynne

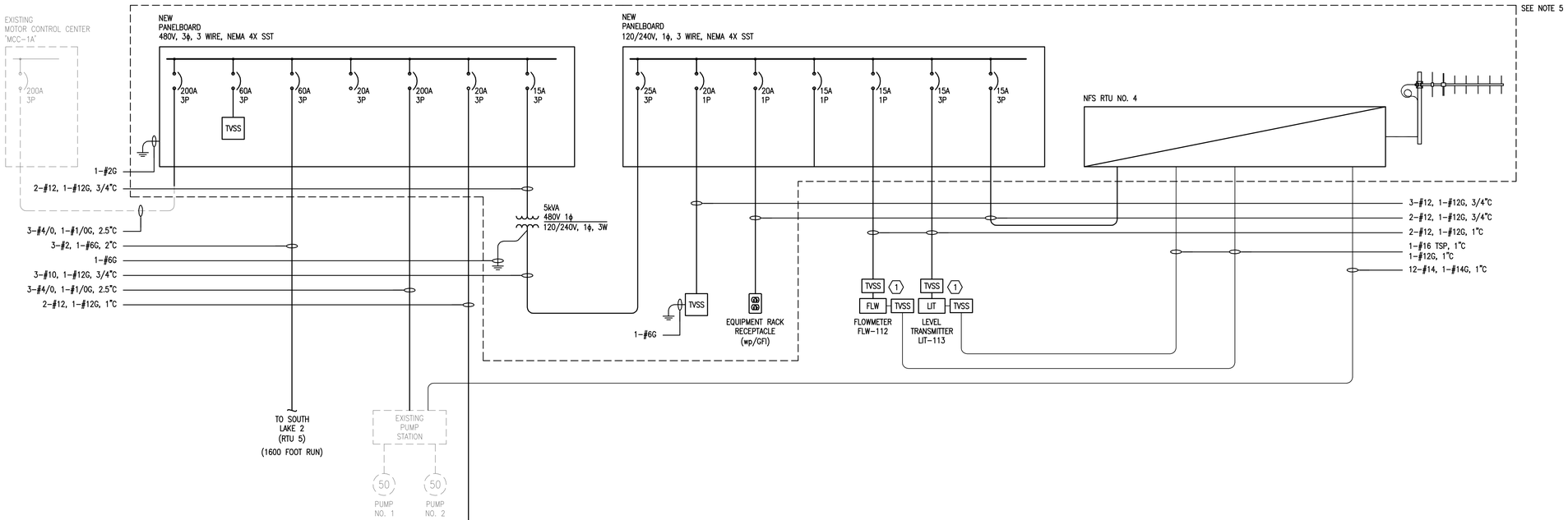

SOUTH LAKE 1-RTU NO. 4
ELECTRICAL SINGLE LINE DIAGRAM
N.T.S.

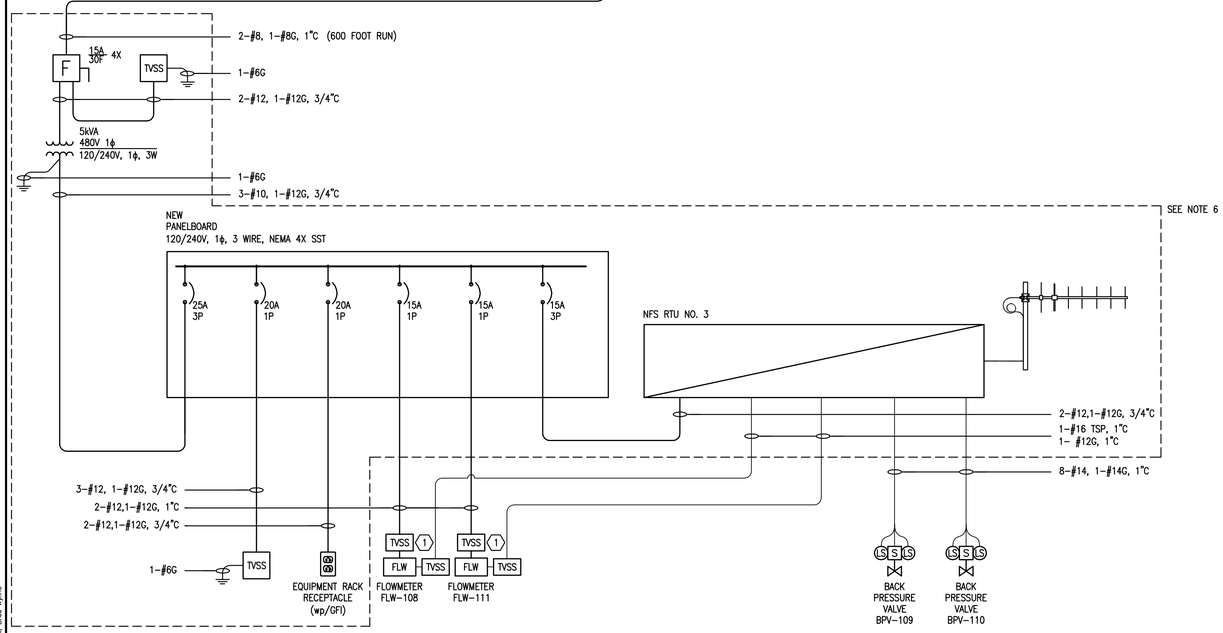

SOUTH LAKE 1-RTU NO. 3
ELECTRICAL SINGLE LINE DIAGRAM
N.T.S.

NOTES:

1. ALL ELECTRICAL WORK SHALL COMPLY WITH THE CURRENT NEC, NESC AND LOCAL CODES INCLUDING OWNERS STANDARDS AND REQUIREMENTS.
2. ALL ELECTRICAL EQUIPMENT SHALL BE INSTALLED SO THAT ALL CODE-REQUIRED AND MANUFACTURER-RECOMMENDED SERVICING CLEARANCES ARE MAINTAINED. INSTALLATIONS SHALL COMPLY WITH NEC 110-26 FOR CLEARANCE REQUIREMENTS.
3. ALL POWER AND CONTROL CABLING SHALL BE 600V RATED THHN/THWN STRANDED COPPER.
4. FOR RTU 3 AND 4. ALL EXPOSED CONDUIT SHALL BE RIGID ALUMINUM. ALL CONDUIT INSTALLED BELOW GRADE SHALL BE DIRECT BURIED SCH. 80 PVC.
5. PROVIDE RTU-4 EQUIPMENT RACK TO INCLUDE THE FOLLOWING.
   A. 480V PANELBOARD
   B. 5 KVA TRANSFORMER
   C. 120 / 240V PANELBOARD
   D. TVSS DEVICES
   E. RECEPTACLE
   F. RTU-4
6. PROVIDE RTU-3 EQUIPMENT RACK TO INCLUDE THE FOLLOWING
   A. 30AMP FRAME DISCONNECT
   B. 5 KVA TRANSFORMER
   C. 120 / 240V PANELBOARD
   D. TVSS DEVICES
   E. RECEPTACLE
   F. RTU-3
7. REFER TO DRAWING G-3 FOR LOCATIONS OF EQUIPMENT RACKS, VALVES, LEVEL TRANSMITTERS, AND FLOW TRANSMITTERS.
8. ALL DUPLEX RECEPTACLES SHALL BE WP GFI.
9. RECONNECT EXISTING PUMP STATION TO NEW 200 AMP BREAKER AS SHOWN.
10. REFER TO I&C DRAWING FOR INSTRUMENT INSTALLATION REQUIREMENTS.
11. REFER TO I&C SPECIFICATIONS AND DRAWINGS FOR INSTRUMENTATION POWER AND SIGNAL TVSS INSTALLATION REQUIREMENTS FOR EACH INSTRUMENT.
12. PROVIDE GROUND TRIODE AT EACH EQUIPMENT RACK.

KEYNOTES:

(1) PROVIDE CONDUIT/WIRE AS REQUIRED TO CONNECT INSTRUMENT TVSS DEVICES WHERE SHOWN. REFER TO SPECIFICATIONS FOR ADDITIONAL REQUIREMENTS.

REV.NO.	DESCRIPTIONS	DATE
	REVISIONS	

SEAL

ARTHUR L. ANCHORS, P.E.
PROFESSIONAL ENGINEER NO. 39804
STATE OF FLORIDA

SEAL

McKIM&CREED
1365 Hamlet Avenue
Clearwater, Florida 33756
Phone: (727)442-7196, Fax: (727)461-3827
EB0006691
www.mckimcreed.com

MANATEE COUNTY, FLORIDA

SEWRF RECLAIMED WATER AUTOMATION AND VFD REPLACEMENT

RTU NO. 3 & NO. 4
SINGLE LINE DIAGRAM

DATE:	JULY 2010
MCE PROJ. #	1024-0129
DRAWN	BMW
DESIGNED	BMW
CHECKED	ALA
PROJ. MGR.	MSL

SCALE
HORIZONTAL: NA
VERTICAL: NA

DRAWING NUMBER
E-3

STATUS: ISSUE FOR BID
REVISION

S:\1024\01291\80-Drawings\Electrical\E03_1024012B.dwg, 7/8/2010 10:41:18 AM, Brad Wynne

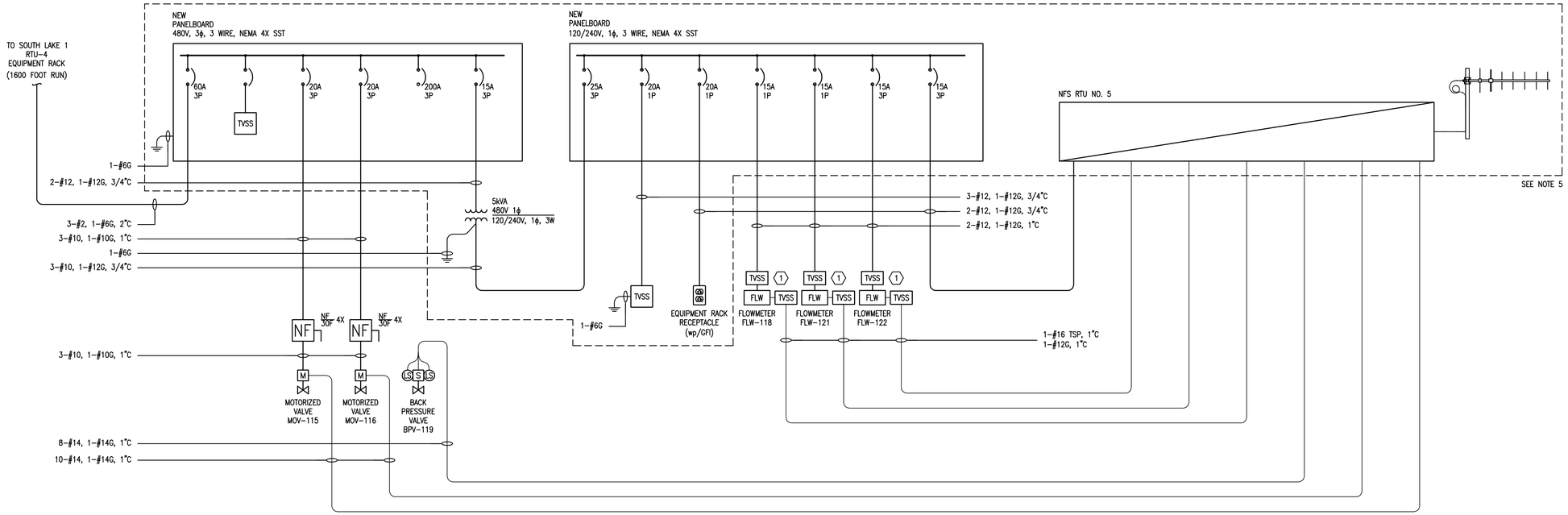

SOUTH LAKE 2-RTU NO. 5
ELECTRICAL SINGLE LINE DIAGRAM
N.T.S.

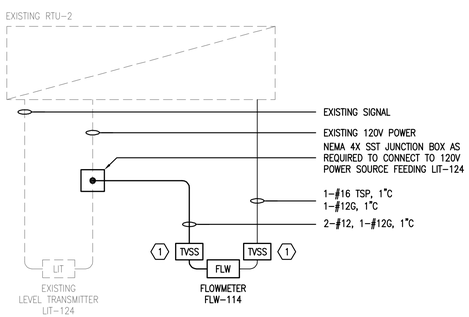

EAST POND EXISTING RTU NO. 2
ELECTRICAL SINGLE LINE DIAGRAM
N.T.S.

NOTES:

1. ALL ELECTRICAL WORK SHALL COMPLY WITH THE CURRENT NEC, NESC AND LOCAL CODES INCLUDING OWNERS STANDARDS AND REQUIREMENTS.
2. ALL ELECTRICAL EQUIPMENT SHALL BE INSTALLED SO THAT ALL CODE-REQUIRED AND MANUFACTURER-RECOMMENDED SERVICING CLEARANCES ARE MAINTAINED. INSTALLATIONS SHALL COMPLY WITH NEC 110-26 FOR CLEARANCE REQUIREMENTS.
3. ALL POWER AND CONTROL CABLING SHALL BE 600V RATED THHN/THWN STRANDED COPPER.
4. FOR RTU 5. ALL EXPOSED CONDUIT SHALL BE RIGID ALUMINUM. ALL CONDUIT INSTALLED BELOW GRADE SHALL BE DIRECT BURIED SCH. 80 PVC.
5. PROVIDE RTU-5 EQUIPMENT RACK TO INCLUDE THE FOLLOWING.
   A. 480V PANELBOARD
   B. 5 KVA TRANSFORMER
   C. 120 / 240V PANELBOARD
   D. TVSS DEVICES
   E. RECEPTACLE
   F. RTU-5
6. REFER TO DRAWING G-3 FOR LOCATIONS OF EQUIPMENT RACKS, VALVES, LEVEL TRANSMITTERS, AND FLOW TRANSMITTERS.
7. ALL DUPLEX RECEPTACLES SHALL BE WP GFI.
8. REFER TO I&C DRAWING FOR INSTRUMENT INSTALLATION REQUIREMENTS.
9. REFER TO I&C SPECIFICATIONS AND DRAWINGS FOR INSTRUMENTATION POWER AND SIGNAL TVSS INSTALLATION REQUIREMENTS FOR EACH INSTRUMENT.
10. PROVIDE GROUND TRIODE AT EACH EQUIPMENT RACK.

KEYNOTES:

(1) PROVIDE CONDUIT/WIRE AS REQUIRED TO CONNECT INSTRUMENT TVSS DEVICES WHERE SHOWN. REFER TO SPECIFICATIONS FOR ADDITIONAL REQUIREMENTS.

REV.NO.	DESCRIPTIONS	DATE

REVISIONS

SEAL

ARTHUR L. ANCHORS, P.E.
PROFESSIONAL ENGINEER NO. 39804
STATE OF FLORIDA

SEAL

McKIM&CREED
1365 Hamlet Avenue
Clearwater, Florida 33756
Phone: (727)442-7196, Fax: (727)461-3827
EB0006691
www.mckimcreed.com

MANATEE COUNTY, FLORIDA

SEWRF RECLAIMED WATER AUTOMATION AND VFD REPLACEMENT

RTU NO. 5
SINGLE LINE DIAGRAM

DATE:	JULY 2010
MCE PROJ. #	1024-0129
DRAWN	BMW
DESIGNED	BMW
CHECKED	ALA
PROJ. MGR.	MSL

SCALE
HORIZONTAL: NA
VERTICAL: NA

DRAWING NUMBER
E-4

STATUS: ISSUE FOR BID
REVISION

S:\1024\0129\05-Drawings\Electrical\E04_1024012Ba.dwg, 7/9/2010 10:41:21 AM, Brad Wynne

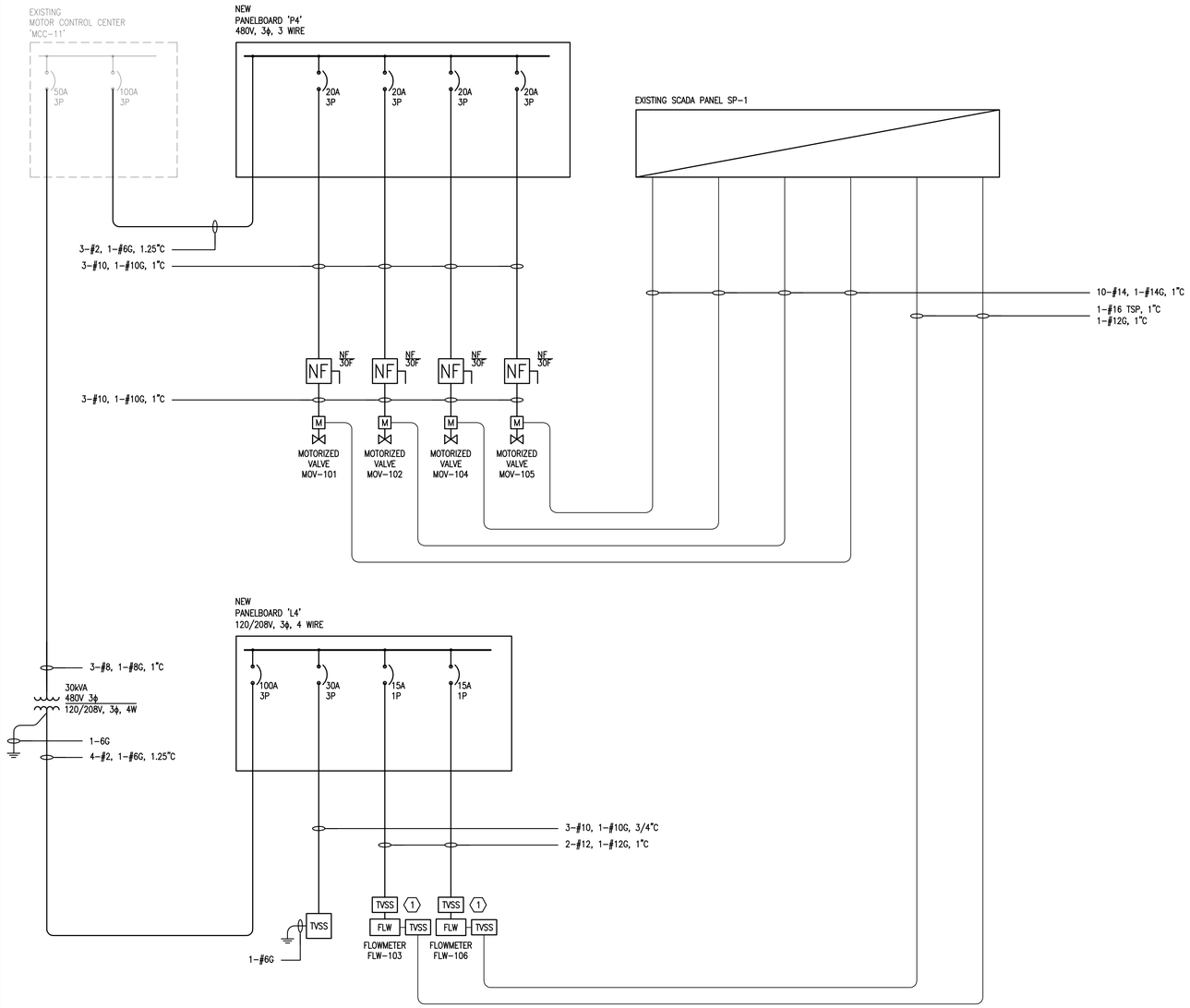

SINGLE LINE DIAGRAM
MAIN ELECTRICAL BUILDING
N.T.S.

NOTES:

1. ALL ELECTRICAL WORK SHALL COMPLY WITH THE CURRENT NEC, NESC AND LOCAL CODES INCLUDING OWNERS STANDARDS AND REQUIREMENTS.
2. ALL ELECTRICAL EQUIPMENT SHALL BE INSTALLED SO THAT ALL CODE-REQUIRED AND MANUFACTURER-RECOMMENDED SERVICING CLEARANCES ARE MAINTAINED. INSTALLATIONS SHALL COMPLY WITH NEC 110-26 FOR CLEARANCE REQUIREMENTS.
3. ALL POWER AND CONTROL CABLING SHALL BE 600V RATED THHN/THWN STRANDED COPPER.
4. ALL EXPOSED CONDUIT SHALL BE RIGID ALUMINUM. ALL CONDUIT INSTALLED BELOW GRADE SHALL BE DIRECT BURIED SCH. 80 PVC.
5. REFER TO I&C DRAWING FOR INSTRUMENT INSTALLATION REQUIREMENTS.
6. REFER TO I&C SPECIFICATIONS AND DRAWINGS FOR INSTRUMENTATION POWER AND SIGNAL TVSS INSTALLATION REQUIREMENTS FOR EACH INSTRUMENT.

KEYNOTES:

(1) PROVIDE CONDUIT/WIRE AS REQUIRED TO CONNECT INSTRUMENT TVSS DEVICES WHERE SHOWN. REFER TO SPECIFICATIONS FOR ADDITIONAL REQUIREMENTS.

REV.NO.	DESCRIPTIONS	DATE

REVISIONS

SEAL

ARTHUR L. ANCHORS, P.E.
PROFESSIONAL ENGINEER NO. 39804
STATE OF FLORIDA

SEAL

McKIM&CREED
1365 Hamlet Avenue
Clearwater, Florida 33756
Phone: (727)442-7196, Fax: (727)461-3827
EB0006691
www.mckimcreed.com

MANATEE COUNTY, FLORIDA

SEWRF RECLAIMED WATER AUTOMATION AND VFD REPLACEMENT

MAIN ELECTRICAL BUILDING
SINGLE LINE DIAGRAM
MODIFICATIONS

DATE:	JULY 2010
MCE PROJ. #	1024-0129
DRAWN	BMW
DESIGNED	BMW
CHECKED	ALA
PROJ. MGR.	MSL

SCALE
HORIZONTAL: NA
VERTICAL: NA

DRAWING NUMBER
E-5

STATUS: ISSUE FOR BID
REVISION

S:\1024\0129\05-Drawings\Electrical\E05_1024012B.dwg, 7/8/2010 10:41:24 AM, Brad Wynne

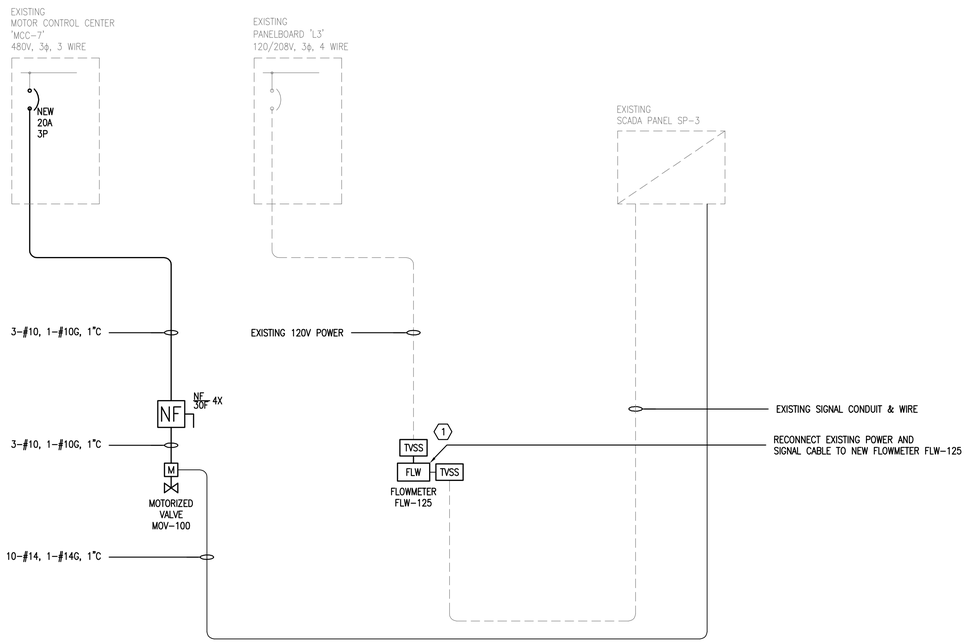

SINGLE LINE DIAGRAM
MCC/BLOWER BUILDING NO. 3
N.T.S.

NOTES:

1. ALL ELECTRICAL WORK SHALL COMPLY WITH THE CURRENT NEC, NESC AND LOCAL CODES INCLUDING OWNERS STANDARDS AND REQUIREMENTS.
2. ALL ELECTRICAL EQUIPMENT SHALL BE INSTALLED SO THAT ALL CODE-REQUIRED AND MANUFACTURER-RECOMMENDED SERVICING CLEARANCES ARE MAINTAINED. INSTALLATIONS SHALL COMPLY WITH NEC 110-26 FOR CLEARANCE REQUIREMENTS.
3. ALL POWER AND CONTROL CABLING SHALL BE 600V RATED THHN/THWN STRANDED COPPER.
4. FOR RTU 5. ALL EXPOSED CONDUIT SHALL BE RIGID ALUMINUM. ALL CONDUIT INSTALLED BELOW GRADE SHALL BE DIRECT BURIED SCH. 80 PVC.
5. PROVIDE RTU-5 EQUIPMENT RACK TO INCLUDE THE FOLLOWING.
   A. 480V PANELBOARD
   B. 5 KVA TRANSFORMER
   C. 120 / 240V PANELBOARD
   D. TVSS DEVICES
   E. RECEPTACLE
   F. RTU-5
6. REFER TO DRAWING G-3 FOR LOCATIONS OF EQUIPMENT RACKS, VALVES, LEVEL TRANSMITTERS, AND FLOW TRANSMITTERS.
7. ALL DUPLEX RECEPTACLES SHALL BE WP GFI.
8. REFER TO I&C DRAWING FOR INSTRUMENT INSTALLATION REQUIREMENTS.
9. REFER TO I&C SPECIFICATIONS AND DRAWINGS FOR INSTRUMENTATION POWER AND SIGNAL TVSS INSTALLATION REQUIREMENTS FOR EACH INSTRUMENT.

KEYNOTES:

(1) PROVIDE CONDUIT/WIRE AS REQUIRED TO CONNECT INSTRUMENT TVSS DEVICES WHERE SHOWN. REFER TO SPECIFICATIONS FOR ADDITIONAL REQUIREMENTS.

REV.NO.	DESCRIPTIONS	DATE

REVISIONS

SEAL

ARTHUR L. ANCHORS, P.E.
PROFESSIONAL ENGINEER NO. 39804
STATE OF FLORIDA

SEAL

McKIM&CREED
1365 Hamlet Avenue
Clearwater, Florida 33756
Phone: (727)442-7196, Fax: (727)461-3827
EB0006691
www.mckimcreed.com

MANATEE COUNTY, FLORIDA

SEWRF RECLAIMED WATER AUTOMATION AND VFD REPLACEMENT

MCC / BLOWER BUILDING NO. 3
SINGLE LINE DIAGRAM
MODIFICATIONS

DATE:	JULY 2010
MCE PROJ. #	1024-0129
DRAWN	BMW
DESIGNED	BMW
CHECKED	ALA
PROJ. MGR.	MSL

SCALE
HORIZONTAL: NA
VERTICAL: NA

DRAWING NUMBER
E-6

STATUS: ISSUE FOR BID
REVISION

S:\1024\0129\60-Drawings\Electrical\E06_1024012b.dwg, 7/9/2010 10:41:27 AM, Brad Wynne

NOTES:

1. REFER TO DRAWING E1 FOR GENERAL NOTES.
2. REPLACE EXISTING VFD-108 FOR EFFLUENT PUMP NO. 1 WITH NEW VFD-108. RECONNECT POWER, CONTROL, AND SIGNAL CONDUCTORS. ADJUST ROUTING OF EXISTING VFD-108 OVERHEAD CONDUITS TO NEW VFD AS REQUIRED. ALIGN DRIVE CABINET WITH EXISTING FLOOR STUB-UPS.
3. REPLACE EXISTING VFD-109 FOR EFFLUENT PUMP NO. 2 WITH NEW VFD-109. RECONNECT POWER, CONTROL, AND SIGNAL CONDUCTORS. ADJUST ROUTING OF EXISTING VFD-109 OVERHEAD CONDUITS TO NEW VFD AS REQUIRED. ALIGN DRIVE CABINET WITH EXISTING FLOOR STUB-UPS.
4. REPLACEMENT VFD-110 FOR EFFLUENT PUMP NO. 3 BY OTHERS.
5. VFD-111 FOR FUTURE EFFLUENT PUMP NO. 4 SHALL BE REMOVED. INSTALL TWO 30" X 30" X 8" NEMA 1 TERMINAL BOXES WITH DISTRIBUTION BLOCKS TO TERMINATE DRIVE POWER SUPPLY, MOTOR POWER, CONTROL WIRING AND SIGNAL WIRING. EXISTING WIRE SHALL NOT BE CUT TO ALLOW RECONNECTION TO A FUTURE DRIVE. ONE TERMINAL BOX SHALL BE LOCATED ON THE EQUIPMENT PAD. THE OTHER TERMINAL BOX SHALL BE LOCATED ABOVE THE DRIVE LINE-UP.
6. REPLACE EXISTING VFD-112 FOR EFFLUENT PUMP NO. 5 WITH NEW VFD-112. RECONNECT POWER, CONTROL AND SIGNAL CONDUCTORS. ADJUST ROUTING OF EXISTING VFD-112 OVERHEAD CONDUITS TO NEW VFD AS REQUIRED. ALIGN DRIVE CABINET WITH EXISTING FLOOR STUB-UPS.
7. REPLACE EXISTING VFD-113 FOR EFFLUENT PUMP NO. 6 WITH NEW VFD-113. RECONNECT POWER, CONTROL AND SIGNAL CONDUCTORS. ADJUST ROUTING OF EXISTING VFD-113 OVERHEAD CONDUITS TO NEW VFD AS REQUIRED. ALIGN DRIVE CABINET WITH EXISTING FLOOR STUB-UPS.
8. ENLARGE EXISTING EFFLUENT PUMP VFD EQUIPMENT PAD BY 10 INCHES ON EACH SIDE IN ORDER TO INSTALL THE NEW VFDS.
9. CONTRACTOR SHALL SCHEDULE AND COORDINATE VFD REPLACEMENT WITH MANATEE COUNTY IN ORDER TO MINIMIZE PLANT OPERATION DISRUPTIONS.

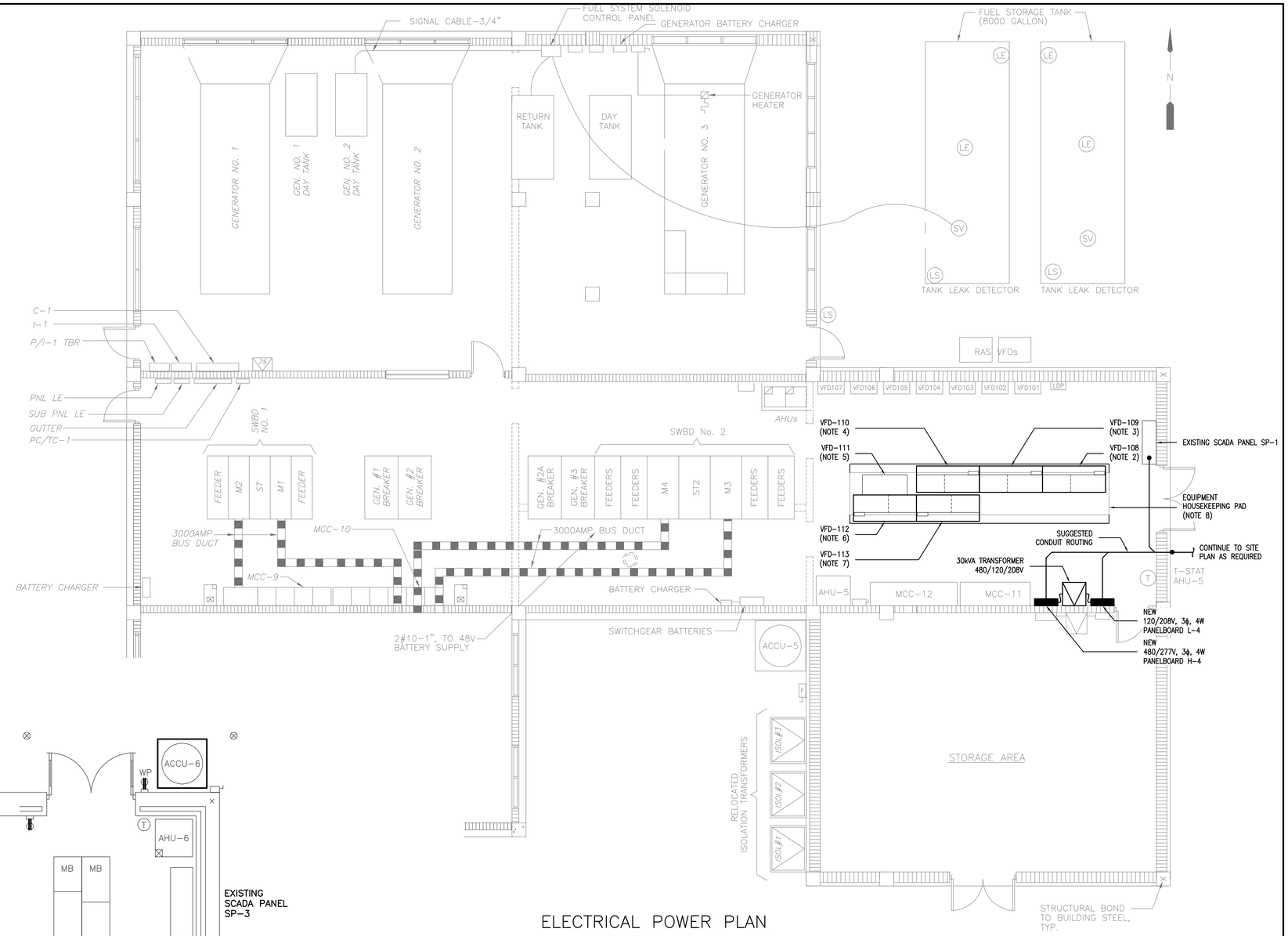

ELECTRICAL POWER PLAN
MAIN ELECTRICAL BUILDING

SCALE: 3/16"=1'-0"

MCC/BLOWER BUILDING NO.3
POWER PLAN

SCALE: 1/4"=1'-0"

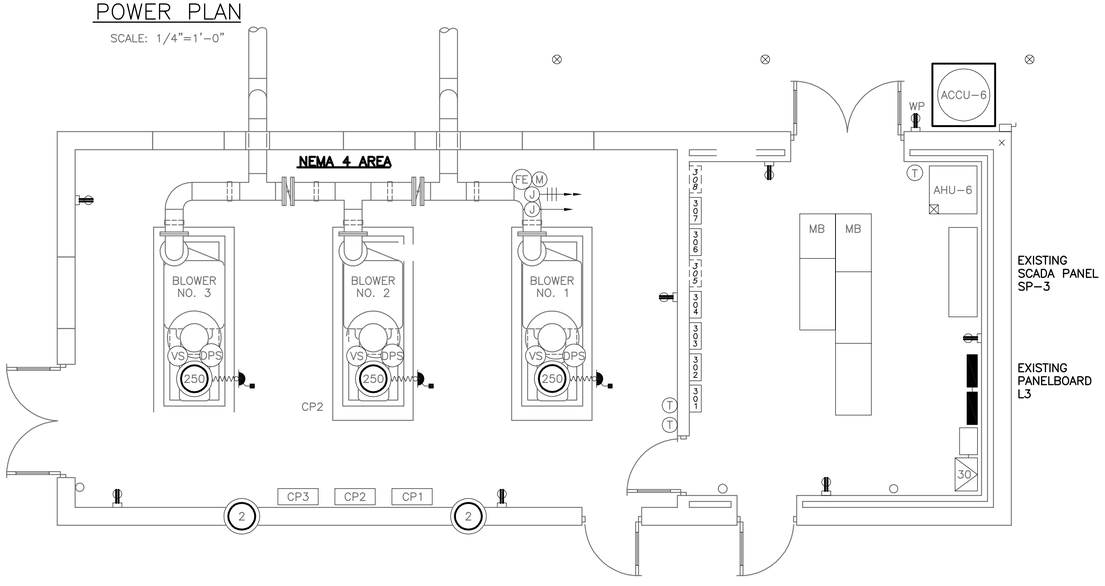

REV.NO.	DESCRIPTIONS	DATE
	REVISIONS	

SEAL

ARTHUR L. ANCHORS, P.E.
PROFESSIONAL ENGINEER NO. 39804
STATE OF FLORIDA

SEAL

McKIM&CREED
1365 Hamlet Avenue
Clearwater, Florida 33756
Phone: (727)442-7196, Fax: (727)461-3827
EB0006691
www.mckimcreed.com

MANATEE COUNTY, FLORIDA

SEWRF RECLAIMED WATER AUTOMATION AND VFD REPLACEMENT

ELECTRICAL DETAILS 1

DATE:	JULY 2010
MCE PROJ. #	1024-0129
DRAWN	BMW
DESIGNED	BMW
CHECKED	ALA
PROJ. MGR.	MSL

SCALE
HORIZONTAL: NA
VERTICAL: NA

DRAWING NUMBER
E-7

STATUS: ISSUE FOR BID
REVISION

S:\1024\0129\90-Drawings\Electrical\E07_1024\0129.dwg, 7/8/2010 10:41:30 AM, Brad Wynne

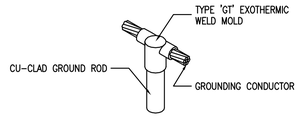

EXOTHERMIC WELD 'GT' CONNECTION
N.T.S.

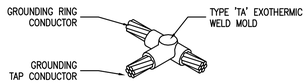

EXOTHERMIC WELD 'TA' CONNECTION
N.T.S.

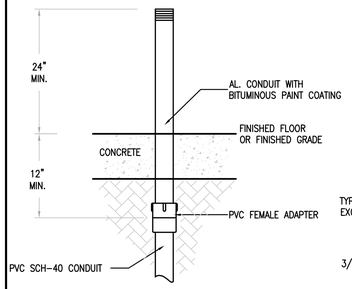

CONDUIT STUB-UP (NEW)
N.T.S.

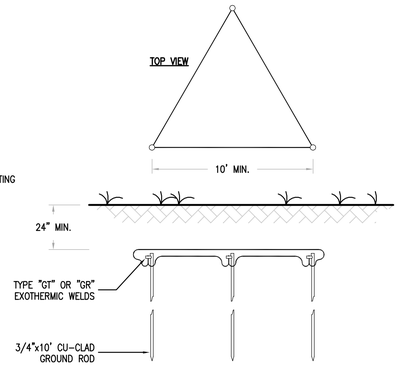

GROUND TRIODE
N.T.S.

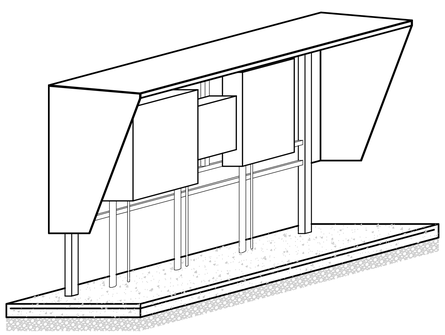

SUN/RAIN HOOD TYPICAL (ISOMETRIC)
N.T.S.

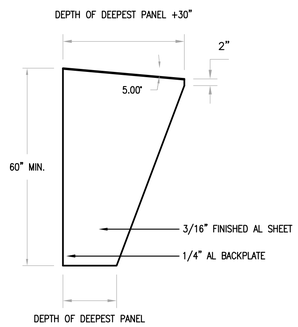

SUN/RAIN HOOD DETAIL (SIDE-VIEW)
N.T.S.

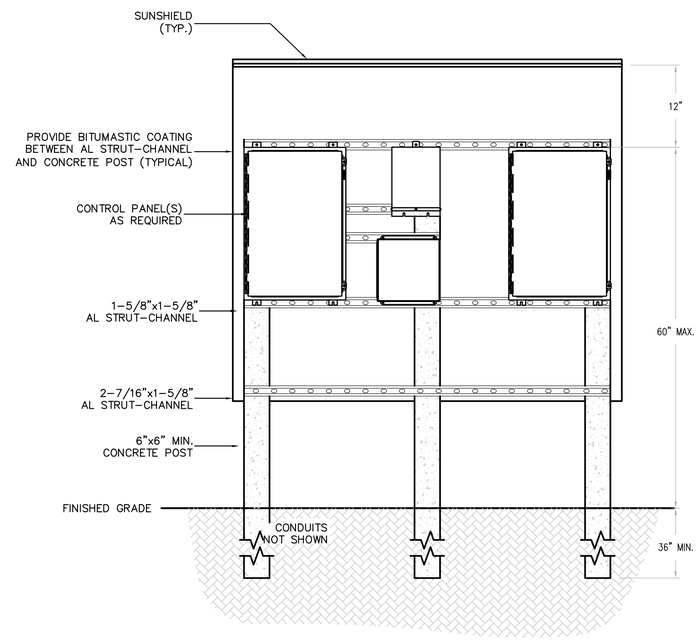

ELECTRICAL EQUIPMENT RACK LAYOUT (FRONT ELEVATION)
N.T.S.

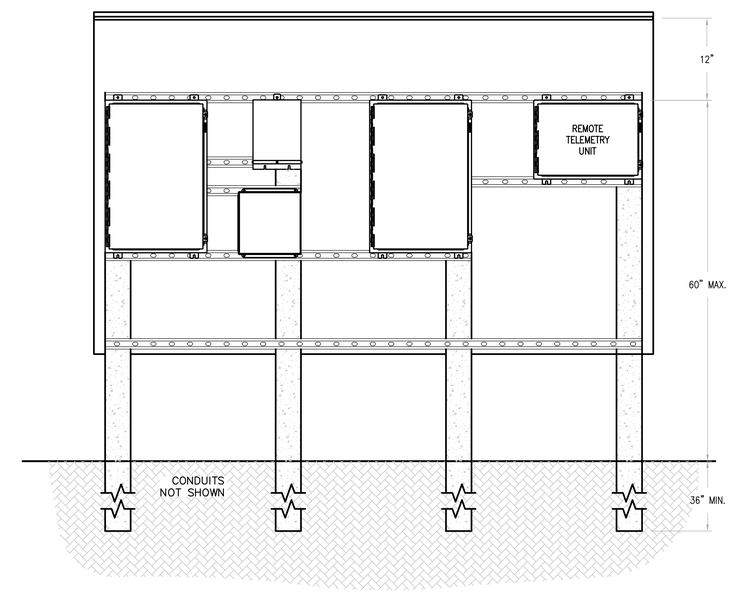

ELECTRICAL EQUIPMENT RACK LAYOUT WITH RTU
N.T.S.

GENERAL NOTES:

1. REFER TO SHEET E1 FOR GENERAL ELECTRICAL NOTES, ABBREVIATIONS, SYMBOLS AND LIGHTING FIXTURE SCHEDULE.
2. ALL ELECTRICAL WORK SHALL COMPLY WITH THE NEC, NESC AND LOCAL CODES INCLUDING OWNERS STANDARDS AND REQUIREMENTS.
3. THE NEW ELECTRICAL SERVICE SHALL BE 480/277-VOLT, 3-PHASE, 4-WIRE.
4. ALL POWER CONDUCTORS SHALL BE 600V RATED XHHW-2 STRANDED CU.
5. ALL CONTROL CONDUCTORS SHALL BE 600V RATED THHN/THWN STRANDED CU.
6. ALL EXPOSED CONDUITS SHALL BE RIGID ALUMINUM (AL).
7. ALL UNDERGROUND CONDUITS SHALL BE DIRECT BURIED PVC SCH-80.
8. SERVICE LATERAL CONDUIT SHALL BE CONCRETE ENCASED PVC SCH-80.

DETAIL NOTES:

1. CONTRACTOR SHALL SUBMIT LAYOUT OF ELECTRICAL EQUIPMENT RACK.
2. CONTRACTOR SHALL NOT CONSTRUCT ELECTRICAL EQUIPMENT RACK PRIOR TO RECEIVING APPROVED SUBMITTAL, INCLUDING ORDERING AND FABRICATION OF MATERIALS.
3. ALL EQUIPMENT MOUNTING HARDWARE SHALL BE 316 STAINLESS-STEEL.
4. CONCRETE SHALL BE 3000psi. CONCRETE PADS SHALL BE REINFORCED WITH 6x6-1.4Wx1.4W WWF. PAD SHALL EXTEND 36" OUT FROM DEEPEST PANEL AND 6" OUT FROM SIDES OF SUN/RAIN HOOD.
5. PROVIDE ADDITIONAL VERTICAL 6" 'I-BEAM' POSTS AND BASES LIKE THOSE SHOWN ON PLANS TO SPAN GREATER DISTANCES GREATER THAN 96".
6. ALARM STROBE SHALL BE MOUNTED, WATER-TIGHT, ATOP PUMP CONTROL PANEL 'PCP'.
7. PROVIDE WEATHERPROOF CORROSION RESISTANT FLUORESCENT FIXTURE MOUNTED UNDERNEATH SUN/RAIN HOOD, LIGHT SWITCH AND GFIC RECEPTACLE.
8. STRUT-CHANNEL SHALL BE MOUNTED TO 'I-BEAM' POSTS WITH STAINLESS-STEEL FASTENERS AND GALVANIZED CLAMPING HARDWARE.
9. THE BOTTOM OF EQUIPMENT SHALL BE MOUNTED NO LESS THAN 20" ABOVE FINISHED CONCRETE PERSONNEL PAD.
10. CONDUITS SHALL BE INSTALLED UNBROKEN (NO FITTINGS, COUPLINGS, UNIONS, ETC.) THROUGH CLASS-1/DIV-II BOUNDARY.

REV.NO.	DESCRIPTIONS	DATE

REVISIONS

SEAL

ARTHUR L. ANCHORS, P.E.
PROFESSIONAL ENGINEER NO. 39804
STATE OF FLORIDA

SEAL

McKIM&CREED
1365 Hamlet Avenue
Clearwater, Florida 33756
Phone: (727)442-7196, Fax: (727)461-3827
EB0006691
www.mckimcreed.com

MANATEE COUNTY, FLORIDA

SEWRF RECLAIMED WATER AUTOMATION AND VFD REPLACEMENT

ELECTRICAL DETAILS 2

DATE:	JULY 2010
MCE PROJ. #	1024-0129
DRAWN	BMW
DESIGNED	BMW
CHECKED	ALA
PROJ. MGR.	MSL

SCALE
HORIZONTAL: NA
VERTICAL: NA

DRAWING NUMBER
E-8

STATUS: ISSUE FOR BID
REVISION

S:\1024\01129\90-Drawings\Electrical\E08_1024012 9.dwg, 7/8/2010 10:41:33 AM, Brad Wynne

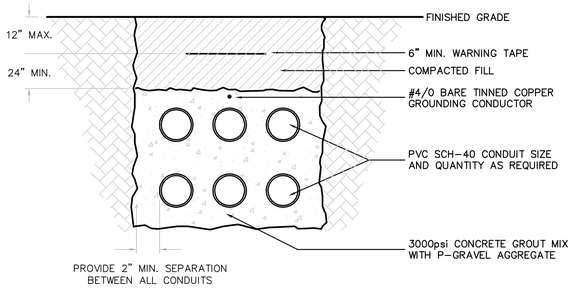

NON-REINFORCED CONCRETE DUCTBANK (WRF YARD PIPING)

N.T.S.

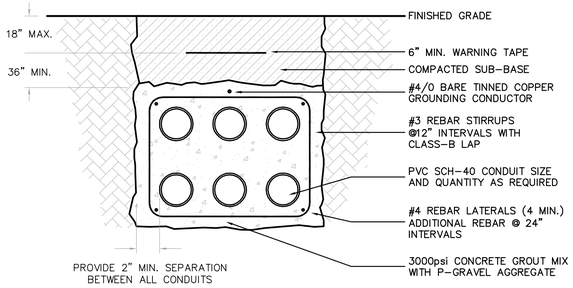

REINFORCED CONCRETE DUCTBANK (ROADWAY CROSSING)

N.T.S.

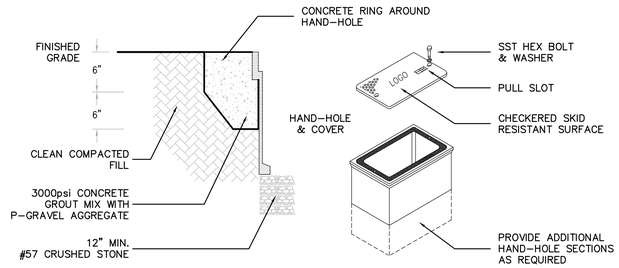

NOTES:

1. HOUSING SHALL BE REINFORCED CONCRETE AND SHALL HAVE A COMPRESSIVE STRENGTH NO LESS THAN 10,000psi.
2. HAND-HOLE AND COVER SHALL BE RATED FOR AASHTO H20 LOADING.
3. PROVIDE STAINLESS STEEL BOLTS, WASHERS AND INSERTS.
4. PROVIDE COVER LOGO "ELECTRICAL" "CONTROLS" OR "COMMUNICATIONS" AS APPLICABLE OR INDICATED ON THE DRAWINGS.
5. MINIMUM BOX SIZE SHALL BE 24" LONG x 17" WIDE x 24" DEEP.

TRAFFIC RATED HAND-HOLE DETAIL

N.T.S.

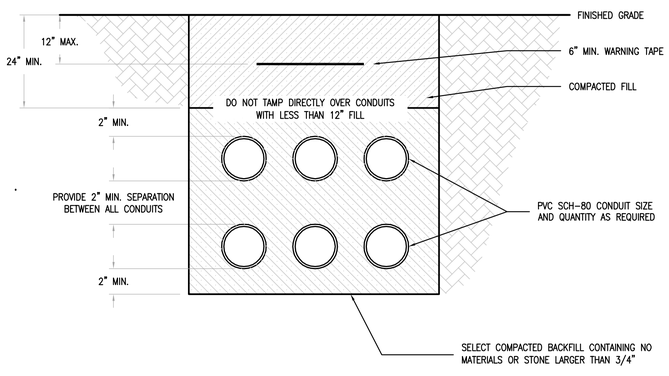

DIRECT BURIED DUCTBANK

SCALE: N.T.S.

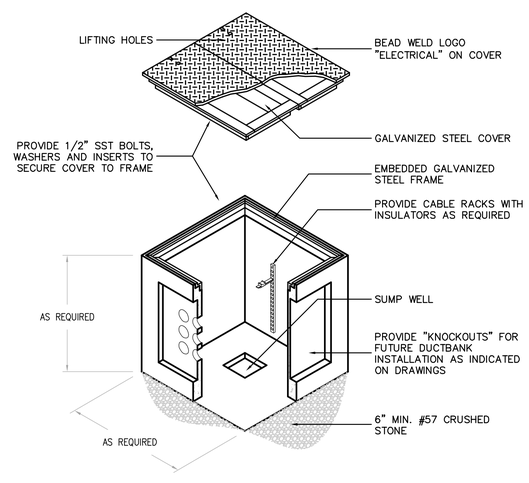

NOTES:

1. BOND ALL METALLIC PARTS WITH #2 TINNED COPPER.
2. EXOTHERMIC WELD CU-CLAD GROUND ROD TO GROUND CABLE.
3. PULL-BOX LID AND LID COLLAR SHALL BE RATED FOR AASHTO H20 LOADING.

STANDARD ELECTRICAL PULL-BOX DETAIL

N.T.S.

GENERAL NOTES:

1. REFER TO SHEET E-1 FOR GENERAL ELECTRICAL NOTES, ABBREVIATIONS AND SYMBOLS.

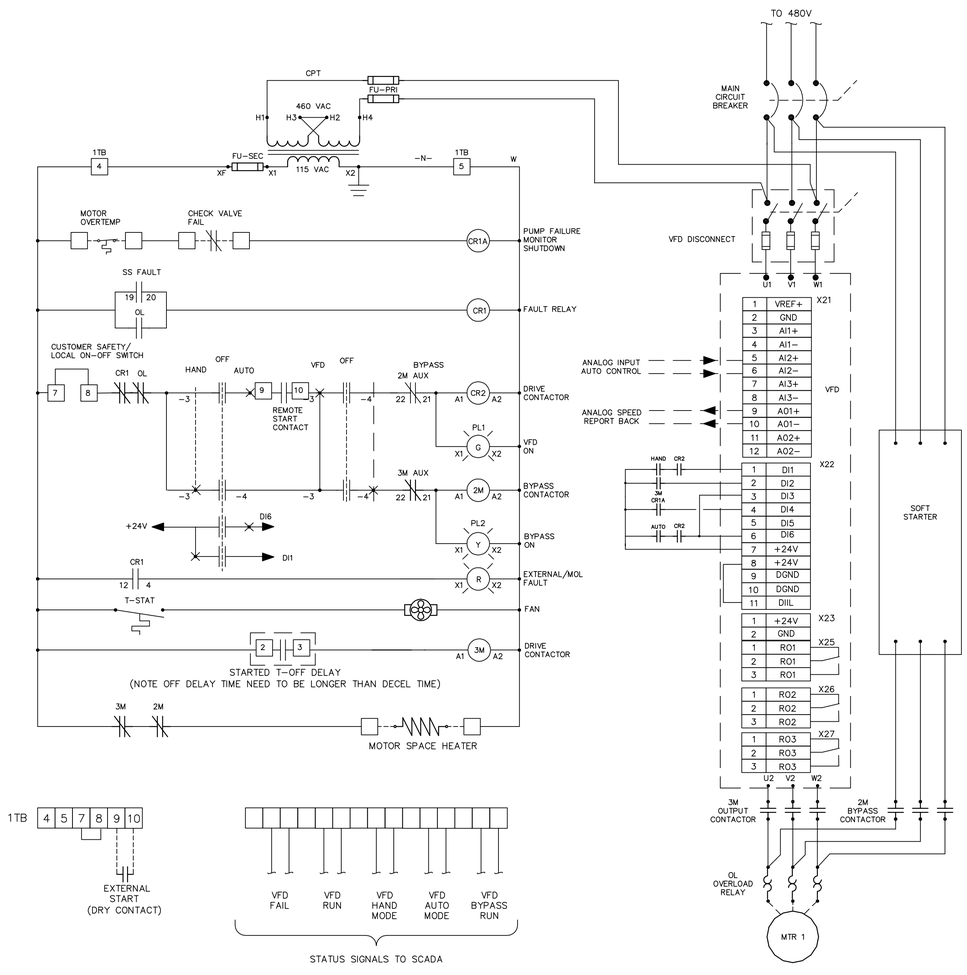

TYP. VFD MOTOR SCHEMATIC

N.T.S.

REV.NO.	DESCRIPTIONS	DATE

REVISIONS

SEAL

ARTHUR L. ANCHORS, P.E.
PROFESSIONAL ENGINEER NO. 39804
STATE OF FLORIDA

SEAL

McKIM&CREED
1365 Hamlet Avenue
Clearwater, Florida 33756
Phone: (727)442-7196, Fax: (727)461-3827
EB0006691
www.mckimcreed.com

MANATEE COUNTY, FLORIDA

SEWRF RECLAIMED WATER AUTOMATION AND VFD REPLACEMENT

ELECTRICAL DETAILS 3

DATE:	JULY 2010
MCE PROJ. #	1024-0129
DRAWN	BMW
DESIGNED	BMW
CHECKED	ALA
PROJ. MGR.	MSL

SCALE
HORIZONTAL: NA
VERTICAL: NA

DRAWING NUMBER
E-9

STATUS: ISSUE FOR BID
REVISION

S:\1024\01\20\80-Drawings\Electrical\E09_1024012S.dwg, 7/8/2010 10:41:38 AM, Brad Wynne

LEGEND

- (27) UNDERVOLTAGE RELAY
- (47) PHASE SEQUENCE RELAY
- (62) TIME DELAY RELAY
- (86) LOCK OUT RELAY
- (51) AC TIME OVERCURRENT RELAY
- (51G) AC TIME OVERCURRENT RELAY
- (CS) CONTROL SWITCH

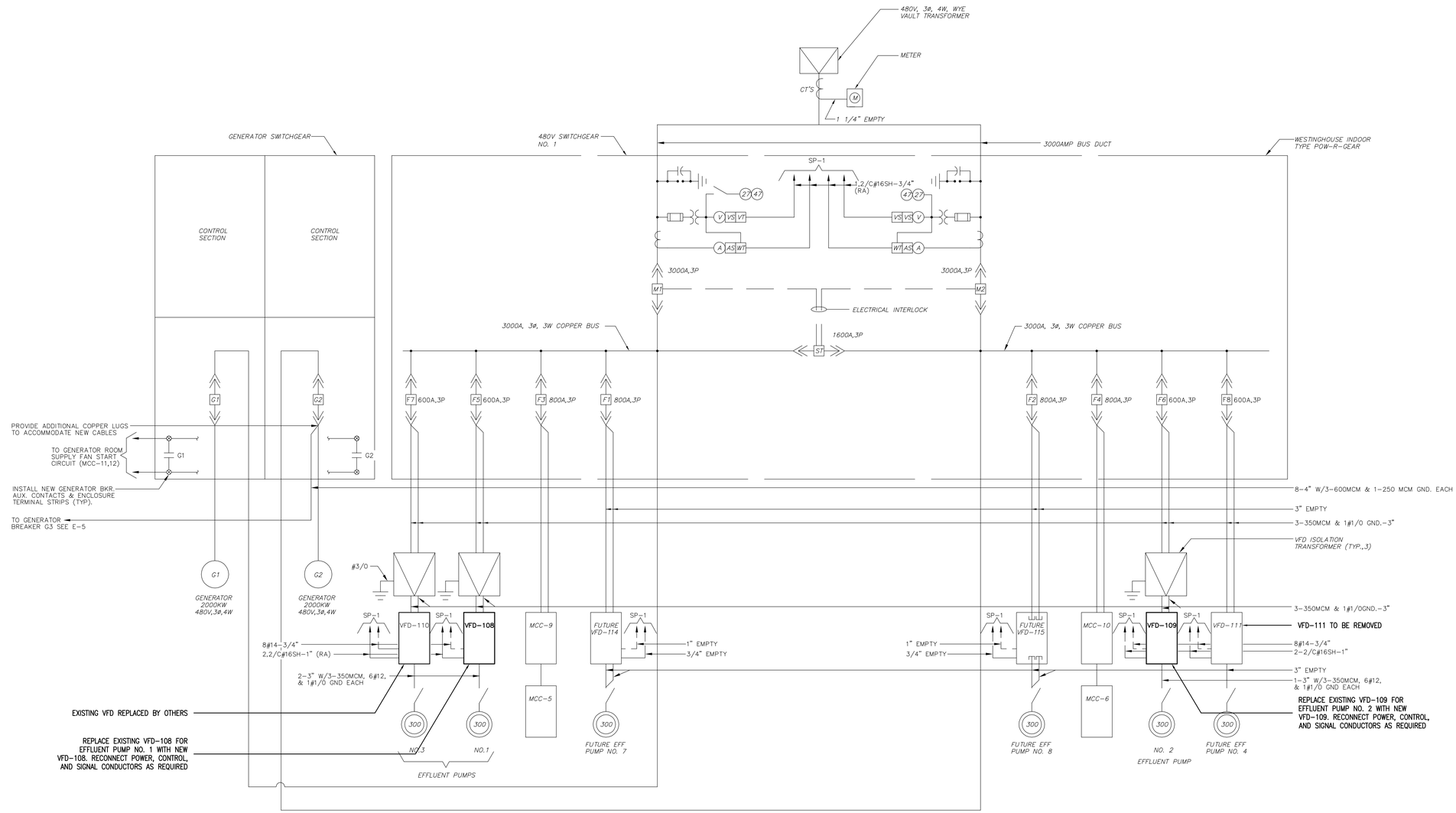

EXISTING SWITCHGEAR NO.1

N.T.S.

REV.NO.	DESCRIPTIONS	DATE

REVISIONS

SEAL

ARTHUR L. ANCHORS, P.E.
PROFESSIONAL ENGINEER NO. 39804
STATE OF FLORIDA

SEAL

McKIM&CREED
1365 Hamlet Avenue
Clearwater, Florida 33756
Phone: (727)442-7196, Fax: (727)461-3827
EB0006691
www.mckimcreed.com

MANATEE COUNTY, FLORIDA

SEWRF RECLAIMED WATER AUTOMATION AND VFD REPLACEMENT

EXISTING SINGLE LINE DIAGRAM MODIFICATIONS 1

DATE:	JULY 2010
MCE PROJ. #	1024-0129
DRAWN	BMW
DESIGNED	BMW
CHECKED	ALA
PROJ. MGR.	MSL

SCALE
HORIZONTAL: NA
VERTICAL: NA

DRAWING NUMBER
E-10

STATUS: ISSUE FOR BID
REVISION

S:\1024\01129\90-Drawings\Electrical\E10_1024012129.dwg, 7/19/2010 10:41:39 AM, Brad Wynne

LEGEND

- (27) UNDERVOLTAGE RELAY
- (47) PHASE SEQUENCE RELAY
- (62) TIME DELAY RELAY
- (86) LOCK OUT RELAY
- (51) AC TIME OVERCURRENT RELAY
- (51G) AC TIME OVERCURRENT RELAY
- (CS) CONTROL SWITCH

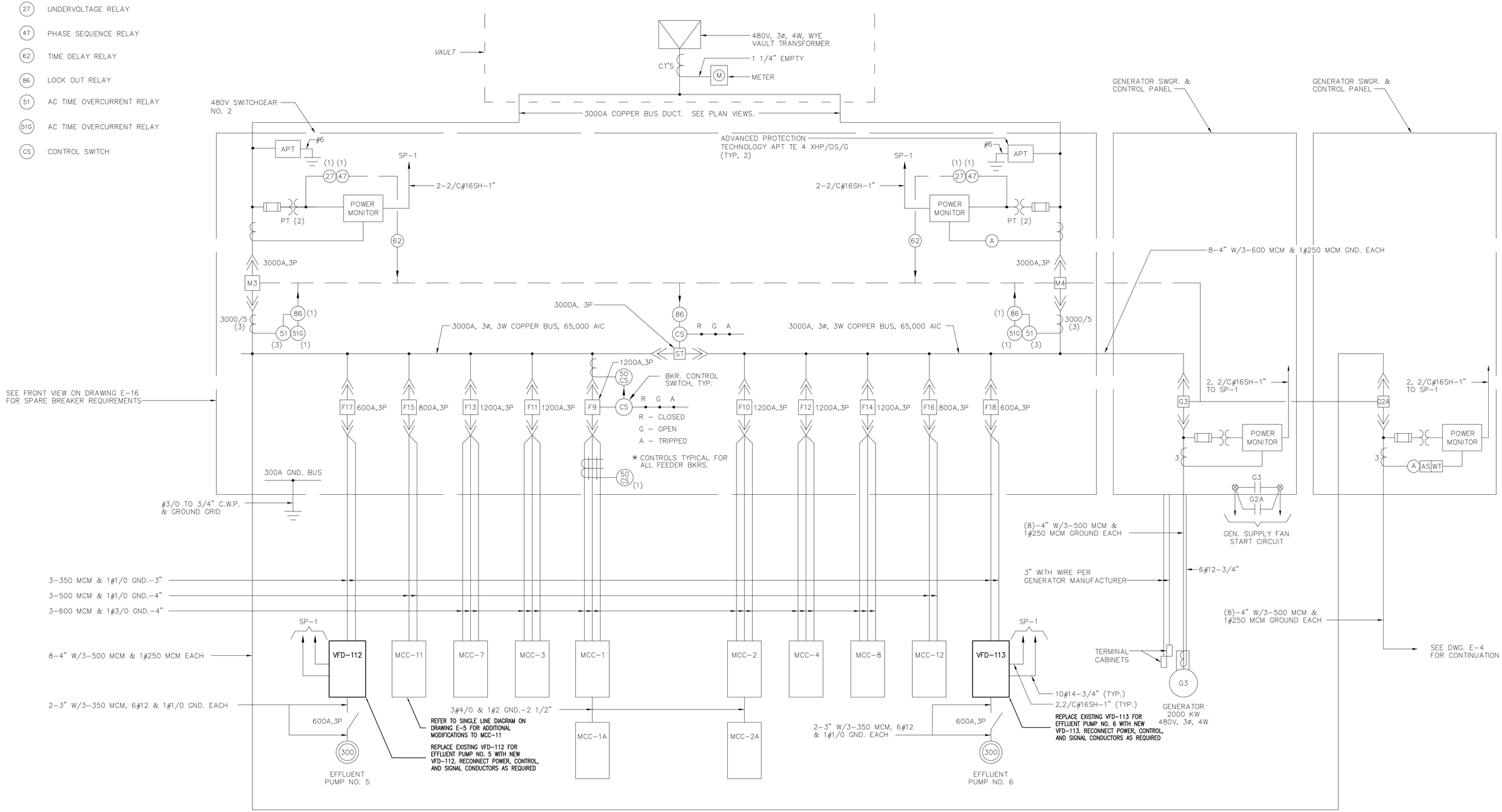

EXISTING SWITCHGEAR NO. 2

REV.NO.	DESCRIPTIONS	DATE
	REVISIONS	

SEAL

ARTHUR L. ANCHORS, P.E.
PROFESSIONAL ENGINEER NO. 39804
STATE OF FLORIDA

SEAL

McKIM&CREED
1365 Hamlet Avenue
Clearwater, Florida 33756
Phone: (727)442-7196, Fax: (727)461-3827
EB0006691
www.mckimcreed.com

MANATEE COUNTY, FLORIDA

SEWRF RECLAIMED WATER AUTOMATION AND VFD REPLACEMENT

EXISTING SINGLE LINE DIAGRAM MODIFICATIONS 2

DATE:	JULY 2010
MCE PROJ. #	1024-0129
DRAWN	BMW
DESIGNED	BMW
CHECKED	ALA
PROJ. MGR.	MSL

SCALE
HORIZONTAL: NA
VERTICAL: NA

DRAWING NUMBER
E-11

STATUS: ISSUE FOR BID
REVISION

S:\1024\0129\05-Drawings\Electrical\E11_1024012B.dwg, 7/8/2010 10:41:41 AM, Brad Wynne

SWWRF RECLAIMED WATER AUTOMATION

COUNTY PROJECT #6016392

ISSUE FOR BID
AUGUST 2010

MANATEE COUNTY, FLORIDA

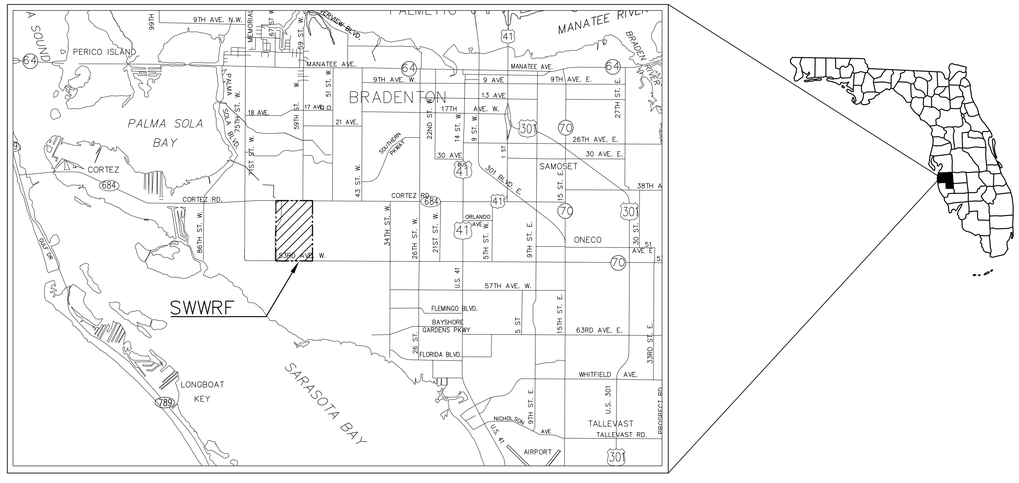

PROJECT VICINITY MAP
SECTION 35S, TOWNSHIP 17E, RANGE 8

McKIM & CREED
1365 Hamlet Avenue
Clearwater, FL 33756
Phone: (727)442-7196, Fax: (727)461-3827
EB0006691
www.mckimcreed.com

MATTHEW S. LOVE, P.E.
No. 66118

SWWRF RECLAIMED WATER AUTOMATION
AUGUST 2010
ISSUE FOR BID
COVER SHEET

S:\1024\0128\00-Drawings\General\G0001-1024-0128.dwg, 8/23/2010 12:16:35 PM, Brian Naught

GENERAL NOTES

1. THESE PLANS ARE SOLELY TO ASSIST THE CONTRACTOR IN ASSESSING THE NATURE AND EXTENT OF THE EXISTING CONDITIONS WHICH MAY BE ENCOUNTERED DURING THE COURSE OF THE WORK. CONTRACTORS ARE DIRECTED, TO CONDUCT WHATEVER INVESTIGATION THEY DEEM NECESSARY, PRIOR TO BIDDING, TO DETERMINE THE ACTUAL CONDITIONS THAT WILL BE ENCOUNTERED.
2. LOCATIONS, ELEVATIONS AND DIMENSIONS OF EXISTING UTILITIES, STRUCTURES, AND OTHER FEATURES ARE SHOWN BASED ON THE BEST INFORMATION AVAILABLE AT THE TIME OF PREPARATION OF THESE PLANS BUT DO NOT PURPORT TO BE ABSOLUTELY CORRECT. THE CONTRACTOR SHALL VERIFY, PRIOR TO CONSTRUCTION, THE LOCATIONS, ELEVATIONS, AND DIMENSIONS OF ALL EXISTING UTILITIES, STRUCTURES, AND OTHER FEATURES (WHETHER OR NOT SHOWN ON THE PLANS) AFFECTING HIS WORK.
3. THE CONTRACTOR SHALL REVIEW AND VERIFY ALL DIMENSIONS ON THE PLANS AND REVIEW ALL FIELD CONDITIONS THAT MAY AFFECT CONSTRUCTION. SHOULD DISCREPANCIES OCCUR, THE CONTRACTOR SHALL NOTIFY THE ENGINEER TO OBTAIN WRITTEN CLARIFICATION BEFORE COMMENCING WITH CONSTRUCTION.
4. THE CONTRACTOR SHALL PROTECT ALL EXISTING STRUCTURES, STORM DRAINS, SEWERS, UTILITIES, AND OTHER FACILITIES IN THE CONSTRUCTION AREA. THE CONTRACTOR SHALL REPAIR ANY DAMAGES DUE TO HIS CONSTRUCTION ACTIVITIES AT NO ADDITIONAL COST TO THE OWNER.
5. WHERE IT IS NECESSARY TO DEFLECT PIPE EITHER HORIZONTALLY OR VERTICALLY, PIPE JOINT DEFLECTION SHALL NOT EXCEED 75% OF THE MANUFACTURERS' MAXIMUM RECOMMENDED DEFLECTION.
6. THE CONTRACTOR SHALL BE RESPONSIBLE FOR THE MAINTENANCE OF THE EXISTING DRAINAGE SYSTEM WITHIN THE LIMITS OF THE PROJECT AREA FOR THE DURATION OF THE PROJECT.
7. THE CONTRACTOR SHALL PROVIDE CERTIFIED RECORD DRAWINGS AS OUTLINED IN THE SPECIFICATIONS. RED-LINE DRAWINGS SHALL BE CURRENT WITH EACH PAY APPLICATION SUBMITTED AND WILL BE CHECKED AS PART OF THE PAY APPLICATION REVIEW PROCESS. PAYMENT WILL NOT BE MADE TO CONTRACTOR WITHOUT APPROVED RED-LINE DRAWINGS.
8. FIELD CONDITIONS MAY NECESSITATE ALIGNMENT AND GRADE DEVIATION OF THE PROPOSED PIPELINES TO AVOID CONFLICTS. NO ADDITIONAL PAYMENT SHALL BE MADE WITHOUT PRIOR APPROVAL OF THE OWNER AND THE OWNER'S ENGINEER.
9. THE CONTRACTOR SHALL INCLUDE IN HIS BID; BY-PASS PUMPING FACILITIES, PUMPS, FITTINGS, LABOR, ETC, AS NECESSARY, BASED ON METHOD AND SEQUENCE OF CONSTRUCTION TO COMPLETE ALL WORK WHILE MAINTAINING THE EXISTING WASTEWATER TREATMENT PLANT OPERATIONS AT ALL TIMES.
10. ALL PROPOSED WORK SHALL BE COORDINATED WITH WASTEWATER TREATMENT PLANT PERSONNEL AND MANATEE COUNTY UTILITIES DEPARTMENT AT LEAST TWO WEEKS IN ADVANCE OF PROPOSED CONSTRUCTION.
11. THE CONTRACTOR SHALL FURNISH SHOP DRAWINGS TO THE ENGINEER FOR APPROVAL OF ALL PIPE CONNECTIONS, TRANSITIONS, AND SPECIALS PRIOR TO FABRICATION OR DELIVERY TO THE JOB SITE.
12. CONNECTIONS TO EXISTING FACILITIES SHALL BE ACCOMPLISHED IN A NEAT WORKMANLIKE MANNER. WHEN FIELD CONDITIONS INDICATE ANY VARIANCE FROM DETAILED METHODS, THE CONTRACTOR SHALL PROVIDE COMPREHENSIVE AND DETAILED DRAWINGS FOR OWNER REVIEW AND APPROVAL PRIOR TO MAKING THE CONNECTIONS.
13. UNLESS OTHERWISE INDICATED OR APPROVED, ALL BELOW GROUND DUCTILE IRON PIPE SHALL HAVE PUSH-ON OR MECHANICAL JOINTS, AND ALL ABOVE GROUND DUCTILE IRON PIPE SHALL HAVE FLANGED JOINTS. ALL JOINTS SHALL BE FULLY RESTRAINED.
14. ALL PIPELINES SHALL HAVE A MINIMUM COVER OF 36" BELOW EXISTING GRADE UNLESS OTHERWISE NOTED OR DIRECTED.
15. WATER SHALL NOT BE PERMITTED IN EXCAVATIONS AND TRENCHES DURING CONSTRUCTION. DEWATERING IS REQUIRED TO A MINIMUM OF 18" BELOW BOTTOM OF EXCAVATION.
16. THE CONTRACTOR SHALL NOT ALLOW ANY DISCHARGE OF WASTEWATER TO LANDS AND/OR ADJACENT WATER BODIES OR STORM DRAINS. ANY LEAKAGE MUST BE CONTAINED AND TRANSFERRED BY THE CONTRACTOR TO THE PLANT DRAIN PUMP STATION AT THE WASTEWATER TREATMENT PLANT.
17. ALL BELOW-GRADE FITTINGS SHALL BE MECHANICAL JOINT DUCTILE IRON WITH FACTORY APPLIED, FUSION BONDED POLYETHYLENE LINING FOR ALL PIPE 4-INCHES AND GREATER IN DIAMETER.
18. ALL EXPOSED PIPING SHALL BE PAINTED WITH DESIGNATED COLORS ASSOCIATED WITH THEIR USAGE AS PROVIDED IN THE SPECIFICATIONS.
19. ALL NEW PIPELINES SHALL BE FLUSHED, PRESSURE TESTED, AND APPROVED PRIOR TO TIE-INS TO EXISTING FACILITIES. THE CONTRACTOR WILL BE ALLOWED TO USE TEMPORARY PLUGS FOR PRESSURE TESTING.
20. ALL CONCRETE THRUST BLOCKS INSTALLED FOR TESTING PURPOSES AND NOT REQUIRED FOR THE PIPELINE SHALL BE REMOVED AND DISPOSED OF BY THE CONTRACTOR PRIOR TO FINAL ACCEPTANCE.
21. CONTRACTOR SHALL MAINTAIN A CLEAR PATH FOR ALL SURFACE WATER DRAINAGE STRUCTURES AND DITCHES DURING ALL PHASES OF CONSTRUCTION.THE CONTRACTOR SHALL BE REQUIRED TO INSTALL ALL EROSION, SEDIMENT AND TURBIDITY CONTROL MEASURES PRIOR TO CONSTRUCTION OF ANY COMPONENTS ASSOCIATED WITH THE PROJECT. SEDIMENT CONTROL INCLUDES SILT DAMS, TRAPS, EROSION PROTECTION, AND ANY OTHER APPURTENANCES NEEDED BUT NOT NECESSARILY SHOWN ON THESE DRAWINGS.
22. CONTRACTOR SHALL PROVIDE PROTECTIVE MATTING, FUEL CONTAINMENT AND ALL OTHER MATERIALS, EQUIPMENT AND LABOR TO PROTECT THE STAGING AREA DURING CONSTRUCTION.
23. CONTRACTOR SHALL, PRIOR TO BEGINNING CONSTRUCTION, SUBMIT A "FUELING SPILL PREVENTION PLAN" THAT SHALL CLEARLY INDICATE HOW FUEL SPILLS WILL BE PREVENTED WHEN FUELING BOTH WITHIN AND OUTSIDE OF THE STAGING AREA.
24. CONTRACTOR SHALL SUBMIT A DEWATERING PLAN FOR APPROVAL PRIOR TO BEGINNING CONSTRUCTION. DEWATERING SHALL BE CONDUCTED IN ACCORDANCE WITH THE BMPS IDENTIFIED IN CHAPTER 4, 4.40 "DEWATERING" OF "THE FLORIDA STORMWATER EROSION AND SEDIMENTATION CONTROL INSPECTOR'S MANUAL".
25. CONTRACTOR SHALL COORDINATE THE WORK SUCH THAT THE PLANT SHALL STAY IN OPERATION AT ALL TIMES.
26. LINE INACTIVATIONS SHALL BE CONDUCTED AT OFF PEAK TIMES AS DICTATED BY PLANT OPERATIONS STAFF.
27. CONTRACTOR SHALL EMPLOY A PROFESSIONAL SURVEYOR, LICENSED IN THE STATE OF FLORIDA TO PERFORM CONSTRUCTION STAKING IN ACCORDANCE WITH RULE 61G17-6.004(3) OF THE FLORIDA ADMINISTRATIVE CODE.

UTILITY NOTES

1. THE CONTRACTOR SHALL BE RESPONSIBLE FOR COORDINATING WITH THE FOLLOWING JURISDICTIONAL BODIES AND UTILITY COMPANIES:

INVESTIGATE BEFORE YOU EXCAVATE
CALL LOCAL PUBLIC UTILITY NOTIFICATION CENTER
TOLL FREE 1-800-432-4770
MIN. 48 HOURS BEFORE YOU EXCAVATE

MANATEE COUNTY
TRANSPORTATION DEP.
ALLEN BRENTLEY
2904 12TH STREET COURT E.
BRADENTON, FL 34208
(941) 708-7509

VERIZON FLORIDA, INC.
DON DURDEN
1701 RINGLING BLVD.
SARASOTA, FL 34236
(941) 952-5616

MANATEE COUNTY
UTILITIES OPERATIONS
KATHY McMAHON
4422-C 66TH STREET W.
BRADENTON, FL 34210

PARAGON CABLE -
BRIGHTHOUSE NETWORK, LLC
WALTER KROL
5413 S.R. 64 E.
BRADENTON, FL 34208
(941) 748-3816 Ext. 24053

FLORIDA POWER AND LIGHT
LARRY RUSSO
125 12TH AVENUE EAST
BRADENTON, FL 34208
(941) 723-4424

TECO/PEOPLES GAS
TED FELEGY
8261 VICO CT.
SARASOTA, FL 34240
(941) 342-4026

2. ALL UTILITY CONSTRUCTION SHALL BE IN CONFORMANCE WITH THE LATEST VERSION OF THE MANATEE COUNTY UTILITY STANDARDS.
3. ALL BELOW GROUND DUCTILE IRON PIPE SHALL BE ENCASED IN A POLYETHYLENE WRAP IN ACCORDANCE WITH AWWA STANDARDS.
4. ALL VALVE BOX COVERS SHALL BE PAINTED TO INDICATE THEIR TYPE OF SERVICE.
5. ALL TEST POINT TAPPING SHALL BE CUT LOOSE FROM THE CORPORATION STOP AND COMPLETELY REMOVED AND DISPOSED OF BY THE CONTRACTOR PRIOR TO FINAL ACCEPTANCE. THE CORPORATION STOP SHALL BE CAPPED AND REMAIN IN PLACE.
6. RAISE EXISTING MANHOLE FRAMES AND COVERS TO MATCH FINAL GRADE.

RESTORATION AND MISCELLANEOUS NOTES

1. THE CONTRACTOR SHALL PROVIDE AN ASPHALT PATCH FOR TRENCH AREAS CONSTRUCTED IN EXISTING ROADWAYS. ADJUST ALL CASTINGS TO MATCH NEW PAVEMENT SURFACE.
2. THE CONTRACTOR SHALL REPLACE ALL EXISTING PAVING, STABILIZED EARTH, CURBS, SIDEWALKS, FENCES, LANDSCAPING AND OTHER IMPROVEMENTS WITH THE SAME OR BETTER TYPE OF MATERIAL THAT WAS REMOVED DURING CONSTRUCTION OR AS DIRECTED BY THE ENGINEER.
3. ALL RESTORATION WORK PERFORMED THROUGHOUT THE PROJECT SHALL CONFORM TO EXISTING LINES AND GRADES UNLESS OTHERWISE NOTED.
4. ALL EXISTING FENCES DISTURBED DURING CONSTRUCTION SHALL BE REPLACED AND REINSTALLED BY THE CONTRACTOR AT NO ADDITIONAL COST TO THE OWNER UNLESS SHOWN TO BE REMOVED ON CONSTRUCTION PLANS.
5. LIMITS OF PROPOSED ROADWAY OVERLAY SHOWN ARE APPROXIMATE. CONTRACTOR SHALL OVERLAY ALL DISTURBED AREAS OF ACCESS ROAD AS PART OF THIS PROJECT.
6. CONTRACTOR SHALL RESTORE ALL IRRIGATION SYSTEM COMPONENTS TO PRE-CONSTRUCTION CONDITIONS.
7. THE CONTRACTOR SHALL RAISE EXISTING MANHOLE FRAMES AND COVERS TO MATCH FINAL GRADE.
8. CONTRACTOR SHALL RESTORE GRADE TO PRECONSTRUCTION ELEVATIONS UNLESS OTHERWISE NOTED.

SIDEWALK NOTES

1. ALL SIDEWALKS SHALL BE CONSTRUCTED WITH 4 INCH THICK 3000 PSI CLASS I CONCRETE REINFORCED WITH 6X6 NO. 10 MESH.
2. SIDEWALKS SHALL BE CONSTRUCTED TO THE SPECIFICATIONS OF THE MANATEE COUNTY DEVELOPMENT STANDARDS AND A MINIMUM OF FIVE (5) FEET WIDE.
3. THE CONCRETE SHALL BE GIVEN A BROOM FINISH. THE SURFACE VARIATIONS SHALL NOT BE MORE THAN 1/2 INCH UNDER A TEN-FOOT STRAIGHTEDGE, NOR MORE THAN 1/8 INCH ON A FIVE-FOOT TRAVERSE SECTION. THE EDGE OF THE SIDEWALK SHALL BE CAREFULLY FINISHED WITH AN EDGING TOOL HAVING A RADIUS OF 1/2 INCH.
4. EXPANSION JOINT: EXPANSION JOINTS BETWEEN THE SIDEWALK AND DRIVEWAYS OR AT FIXED OBJECTS AND SIDEWALK INTERSECTIONS SHALL BE 1/2 INCH JOINTS.
5. CONTRACTION JOINTS: FIXED OPEN-TYPE CONTRACTION JOINTS SHALL BE FORMED BY STAKING A METAL BULKHEAD IN PLACE AND DEPOSITING THE CONCRETE ON BOTH SIDES. AFTER THE CONCRETE HAS SET SUFFICIENTLY TO PRESERVE THE WIDTH AND SHAPE OF THE JOINT, THE BULKHEAD SHALL BE REMOVED. AFTER THE SIDEWALK HAS BEEN FINISHED OVER THE JOINT, THE SLOT SHALL BE EDGED WITH A TOOL HAVING A 1/2 INCH RADIUS. SAWED JOINTS: A SLOT APPROXIMATELY 3/16 INCH WIDE AND NOT LESS THAN 1-1/2 INCHES DEEP SHALL BE CUT WITH A CONCRETE SAW AFTER THE CONCRETE HAS SET.

INDEX OF DRAWINGS

GENERAL

	COVER
G-1	GENERAL NOTES AND SHEET INDEX
G-2	ABBREVIATIONS, SYMBOLS AND LEGENDS
G-3	PROPOSED SITE PLAN

MECHANICAL

M-1	MECHANICAL DETAILS 1
M-2	MECHANICAL DETAILS 2
M-3	MECHANICAL DETAILS 3
M-4	EROSION CONTROL DETAILS AND MECHANICAL DETAILS 4

INSTRUMENTATION AND CONTROLS

I-1	PROCESS AND INSTRUMENTATION GENERAL NOTES, LEGEND AND ABBREVIATIONS
I-2	PROPOSED EFFLUENT FLOW SCHEMATIC
I-3	PROCESS AND INSTRUMENTATION DIAGRAM SHEET 1
I-4	PROCESS AND INSTRUMENTATION DIAGRAM SHEET 2
I-5	PROCESS AND INSTRUMENTATION DIAGRAM SHEET 3
I-6	PROCESS AND INSTRUMENTATION DIAGRAM SHEET 4
I-7	PROCESS AND INSTRUMENTATION DETAILS
I-8	COMMUNICATIONS SYSTEM OVERVIEW

ELECTRICAL

E-1	ELECTRICAL GENERAL NOTES, LEGEND AND ABBREVIATIONS
E-2	ELECTRICAL BUILDING PANEL SP-1 MODIFICATIONS
E-3	MAIN ELECTRICAL BUILDING SINGLE LINE DIAGRAM
E-4	EXISTING REMOTE MODIFICATIONS SINGLE LINE DIAGRAM
E-5	ELECTRICAL DETAILS 1
E-6	ELECTRICAL DETAILS 2

REV.NO.	DESCRIPTIONS	DATE

REVISIONS

SEAL

MATTHEW S. LOVE, P.E.
No. 66118

SEAL

McKIM&CREED
1365 Hamlet Avenue
Clearwater, Florida 33756
Phone: (727)442-7196, Fax: (727)461-3827
EB0006691
www.mckimcreed.com

MANATEE COUNTY, FLORIDA

SWWRF RECLAIMED WATER AUTOMATION

GENERAL NOTES AND SHEET INDEX

DATE:	AUGUST 2010
MCE PROJ. #	1024-0128
DRAWN	QES
DESIGNED	MSL
CHECKED	JSL
PROJ. MGR.	MSL

SCALE
HORIZONTAL: AS SHOWN
VERTICAL: NA

DRAWING NUMBER
G-1

STATUS: ISSUE FOR BID
REVISION

S:\1024\01128\90-Drawings\General\G-1-Gen Notes-1024-01128.dwg, 9/1/2010 9:05:01 AM, Brian Naught

GENERAL ABBREVIATIONS

@.	AT
ABW	AUTOMATIC BACKWASH
A/C	AIR CONDITIONER UNIT
AC	ACRES
AC	ASPALTIC CONCRETE
ABD	ABANDONED
AL./ALUM.	ALUMINUM
ANCH.	ANCHOR
APPROX.	APPROXIMATE
BLDG.	BIULDING
BM.	BEAM
BOT./BOTT.	BOTTOM
(C)	CALCULATED DATA
C	CHANNEL
C.	CONDUIT
C.B.	CATCH BASIN
CCR	CERTIFIED CORNER RECORD
CHKR	CHECKERED
CIR.	CIRCLE
CLF	CHAIN LINK FENCE
℄	CENTERLINE
CMP	CORRUGATED METAL PIPE
COL.	COLUMN
CONN.	CONNECTOR/CONNECTION
CONC.	CONCRETE
COR	CORNER
CPB	CONDOMINIUM PLAT BOOK
C/T	CURB TIE
CU.	COPPER
(D)	DEED DATA
D.	DEEP/DRAIN
DB	DEED BOOK
DBL.	DOUBLE
DHW.	DESIGN HIGH WATER
DISCH.	DISCHARGE
DN.	DOWN
DRWY	DRIVEWAY
E.W.	EACH WAY
EA.	EACH
ECMP	ELLIPTICAL CORRUGATED METAL PIPE
EL./ELEV.	ELEVATION
ELEC.	ELECTRICAL CONDUIT
EP	EDGE OF PAVEMENT
ERCP	ELLIPTICAL REINFORCED CONCRETE PIPE
ETC.	AND SO FORTH
EXIST.	EXISTING
EXP.	EXPANSION
(F)	FIELD DATA
FCM	FOUND CONCRETE MONUMENT
FDOT	FLORIDA DEPARTMENT OF TRANSPORTATION
FF	FINISHED FLOOR
FIR	FOUND IRON ROD
FND	FOUND NAIL & DISC
FOP	FOUND OPEN PIPE
FPP	FOUND PINCHED PIPE
FRRS	FOUND RAILROAD SPIKE
F/T	FENCE TIE
FT.	FOOT
FTG.	FOOTING
FXC	FOUND X-CUT
GALV.	GALVANIZED
GDRL	GUARDRAIL
GE	GRATE ELEVATION
GEN	GENERATOR
GI	GRATED INLET
GPM	GALLONS PER MINUTE
GRTG.	GRATING
G.S.	GALVANIZED STEEL
GR./GRD.	GRADE
GWP	GUY WIRE POLE
HDWALL	HEADWALL
H.R.	HANDRAIL
HWL	HIGH WATER LEVEL
IE	INVERT ELEVATION
IN.	INCH
INV.	INVERT
IP	IRON PIPE
IR	IRON ROD
J.B.	JUNCTION BOX
JT.	JOINT
(L)	LEGAL DESCRIPTION DATA
LB	LICENSED BUSINESS
LG.	LONG
LN.	LANE
LP	LIGHT POLE
LS	LICENSED SURVEYOR
MAS	MASONRY
MAX.	MAXIMUM
MCC	MOTOR CONTROL CENTER
MES	MITERED END SECTION
MG	MILLION GALLONS
MES	MILLION GALLONS PER DAY
MHW	MEAN HIGH WATER
MON.	MONUMENT
NG	NATURAL GROUND
N.T.S.	NOT TO SCALE
NO.	NUMBER
NP	NORMAL POOL
ø	DIAMETER/PHASE
O/A	OVERALL
OPNG.	OPENING
OR	OFFICIAL RECORDS BOOK
(P)	PLAT BOOK
PCCP	PRE-STRESSED CONCRETE PIPE
PG	PAGE
PLCS.	PLACES
PLS	PROFESSIONAL LAND SURVEYOR
POB	POINT OF BEGINNING
POC	POINT OF COMMENCEMENT
POT	POTABLE
PP	POWER POLE
PRM	PERMANENT REFERENCE MONUMENT
PROP.	PROPOSED
PSM	PROFESSIONAL SURVEYOR & MAPPER
P/T	PAVEMENT TIE
P.V.	PLUG VALVE
PVMT	PAVEMENT
R.	RADIUS/RISER/RELAY
RCP	REINFORCED CONCRETE PIPE
REF.	REFERENCED
REINF.	REINFORCED/REINFORCING
REQ'D	REQUIRED
RESTR.	RESTRAINED
RLS	REGISTERED LAND SURVEYOR
RW; R/W	RIGHT-OF-WAY
SAN.	SANITARY
SEC.	SECTION
SGL	SINGLE
SHW	SEASONAL HIGH WATER
SIR	SET IRON ROD $\frac{1}{2}$" LB 6113
SND	SET NAIL & DISC LB 6113
SPRK	SPRINKLER
SQ.	SQUARE
SN.	SIGN
SR	STATE ROAD
SSMH	SANITARY SEWER MANHOLE
S/T	SIDEWALK TIE
STL.	STEEL
STY	STORY
S/W; SWK	SIDEWALK
SYM.	SYMBOL
TBM	TEMPORARY BENCH MARK
TOB	TOP OF BANK
T.&B.	TOP & BOTTOM
TEL	TELEPHONE
TEMP.	TEMPORARY
THK	THICK
TOS	TOE OF SLOPE
TYP.	TYPICAL
UG	UNDERGROUND GAS
UP	UTILITY POLE
UT	UNDERGROUND TELEPHONE
VCP	VITRIFIED CLAY PIPE
VERT.	VERTICAL
W	WIDE FLANGE/WIDE/WATT
W/	WITH
WF	WOOD FENCE
W/L	WATER LINE
W.L.	WATER LEVEL
W/M	WATER MAIN
W.M.	WATER METER
W.P.	WEATHER PROOF
W.S.	WALL SLEEVE/WATER STOP/WATER SERVICE
W/T	WALL TIE
WTR.	WATER

FLOW ABBREVIATIONS

AL	ALUM SOLUTION
AB	AERATION BASIN
AD	AEROBIC DIGESTER
AX	ANOXIC BASIN
BA	BLOWER AIR
BP	BYPASS
BW	BACKWASH
CA	COMPRESSED AIR
CCC	CHLORINE CONTACT CHAMBER
CCE	CHLORINATED EFFLUENT
CF	CLOTH FILTER
CLE	CLARIFIER EFFLUENT
CLG	CHLORINE GAS
CLS/CL2S	CHLORINE SOLUTION
D/DR	DRAIN
DAF	DISSOLVED AIR FLOTATION
DF	NEW CLOTH FILTER
DS	DEWATERED SLUDGE
EFF	EFFLUENT
EXP	EXPANSION
FBW	FILTER BACKWASH
FC	FINAL CLARIFIER
FE	FILTER EFFLUENT
FLE	FILTERED LAKE EFFLUENT
FLW	FLOCCULATED WATER
FM	FLOW METER
FW	FILTERED WATER
GBT	GRAVITY BELT THICKENER
GR	GRIT
HDW	HEADWORKS
INF	INFLUENT
IR	INTERNAL RECYCLE
HSBFP	HIGH SOLIDS BELT FITER PRESS
ML	MIXED LIQUOR
OF	OVERFLOW
P	POLYMER
PD	PLANT DRAIN
PDFM	PLANT DRAIN FORCE MAIN
PS	PUMP STATION
PW	POTABLE WATER
RAS	RETURNED ACTIVATED SLUDGE
RCW	RECLAIMED WATER
REJ	REJECT
RML	RECIRCULATED MIXED LIQUOR
RW	REUSE WATER
SAM	SAMPLE
SB	SPLITTER BOX
SC	SCUM
SDR	STORMWATER DRAINAGE
SL	SAMPLE LINE
SS	SANITARY SEWER
TS	THICKENED SLUDGE
WAS	WASTE ACTIVATED SLUDGE
WBW	WASTE BACKWASH WATER
WW	WASTEWATER

PIPING ABBREVIATIONS

ARV	AIR RELEASE VALVE
ABD	ABANDONED
BFV	BUTTERFLY VALVE
BV	BALL VALVE
CB	CATCH BASIN
CO	CLEANOUT
CORP	CORPORATION
CV	CHECK VALVE
D.I.	DUCTILE IRON
DIA	DIAMETER
D.I.P.	DUCTILE IRON PIPE
ELEC.	ELECTRICAL
EXIST.	EXISTING
FHA	FIRE HYDRANT ASSEMBLY
FL	FLANGED
GS	GALVANIZED STEEL
GV	GATE VALVE
HB	HOSE BIBB
HDPE	HIGH DENSITY POLYETHYLENE
MH	MANHOLE
MJ	MECHANICAL JOINT
PE	PLAIN END
PS	PUMP STATION
PV	PLUG VALVE
PVC	POLYVINYLCHLORIDE
RED.	REDUCER
SCH	SCHECULE
SDR.	DIAMETER RATIO
SS.	STAINLESS STEEL
TBR	TO BE REMOVED
UE	UNDERGROUND ELECTRIC
VERT.	VERTICAL
WM	WATER METER

LEGEND

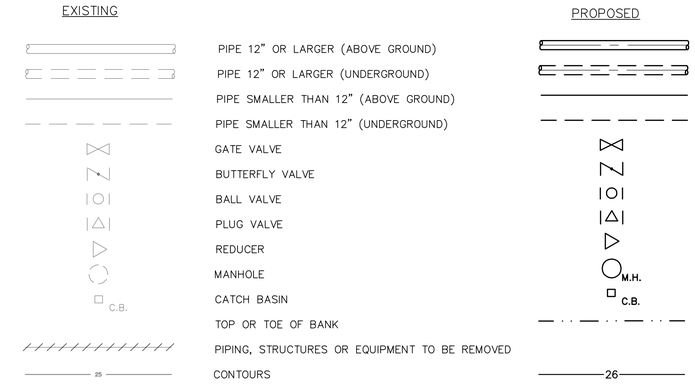

PIPE IDENTIFICATION

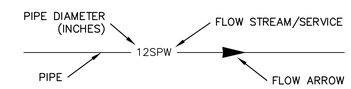

SECTION DESIGNATION

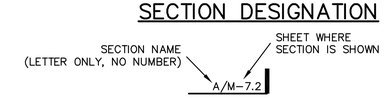

REV.NO.	DESCRIPTIONS	DATE

REVISIONS

SEAL

MATTHEW S. LOVE, P.E.
No. 66118

SEAL

McKIM&CREED
1365 Hamlet Avenue
Clearwater, Florida 33756
Phone: (727)442-7196, Fax: (727)461-3827
EB0006691
www.mckimcreed.com

MANATEE COUNTY, FLORIDA

SWWRF RECLAIMED WATER AUTOMATION

ABBREVIATION, SYMBOLS AND LEGENDS

DATE:	AUGUST 2010
MCE PROJ. #	1024-0128
DRAWN	QES
DESIGNED	MSL
CHECKED	JSL
PROJ. MGR.	MSL

SCALE
HORIZONTAL: AS SHOWN
VERTICAL: NA

DRAWING NUMBER
G-2

STATUS: ISSUE FOR BID
REVISION

S:\1024\0128\05-Drawings\General\G-2-Abbrev-Legend-1024-0128.dwg, 8/23/2010 12:18:05 PM, Brian Nought

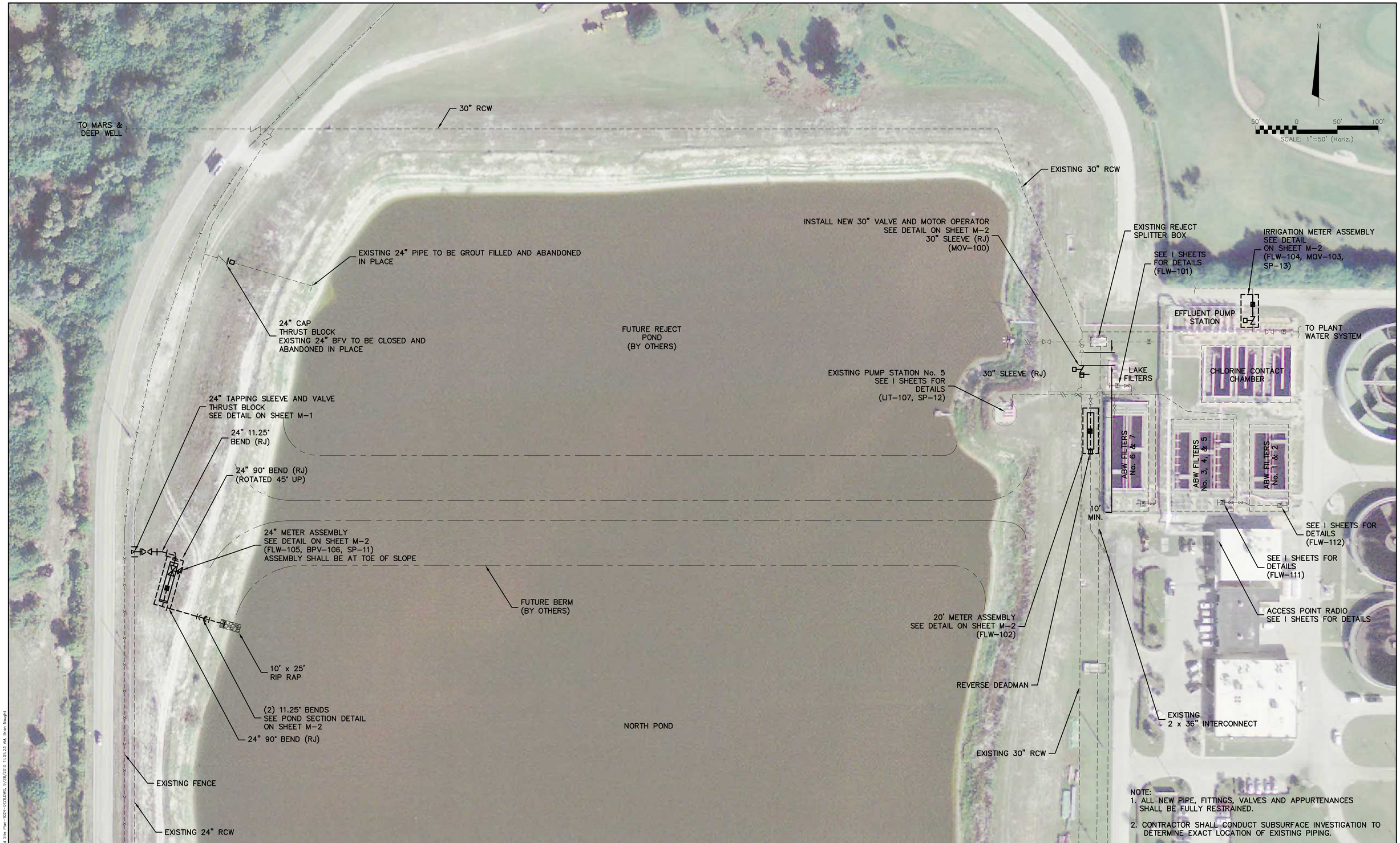

NOTE:
1. ALL NEW PIPE, FITTINGS, VALVES AND APPURTENANCES SHALL BE FULLY RESTRAINED.
2. CONTRACTOR SHALL CONDUCT SUBSURFACE INVESTIGATION TO DETERMINE EXACT LOCATION OF EXISTING PIPING.

REV.NO.	DESCRIPTIONS	DATE
	REVISIONS	

SEAL

MATTHEW S. LOVE, P.E.
No. 66118

SEAL

McKIM&CREED
1365 Hamlet Avenue
Clearwater, Florida 33756
Phone: (727)442-7196, Fax: (727)461-3827
EB0006691
www.mckimcreed.com

MANATEE COUNTY, FLORIDA

SWWRF RECLAIMED WATER AUTOMATION

PROPOSED SITE PLAN

DATE:	AUGUST 2010
MCE PROJ. #	1024-0128
DRAWN	QES
DESIGNED	MSL
CHECKED	JSL
PROJ. MGR.	MSL

SCALE
HORIZONTAL: AS SHOWN
VERTICAL: NA

DRAWING NUMBER
G-3

STATUS: ISSUE FOR BID
REVISION

S:\1024\0128\80-Drawings\General\G-3 Proposed Site Plan-1024-0128.DWG, 8/26/2010 11:31:23 AM, Brian Naught

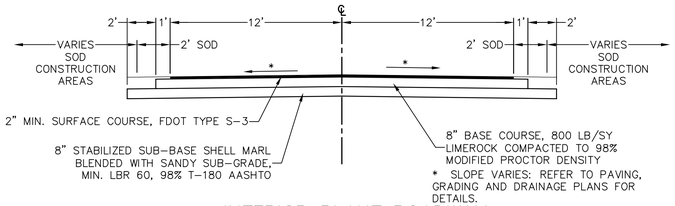

INTERIOR PLANT ROADWAY TYPICAL SECTION

NOT TO SCALE

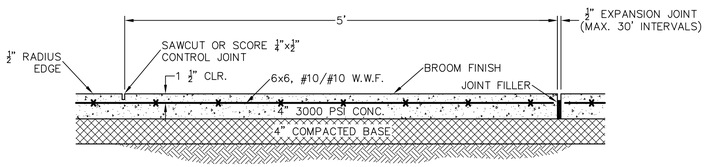

TYPICAL SIDEWALK DETAIL

NOT TO SCALE

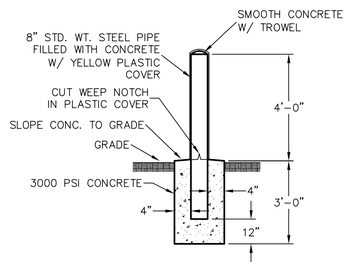

BOLLARD DETAIL

NOT TO SCALE

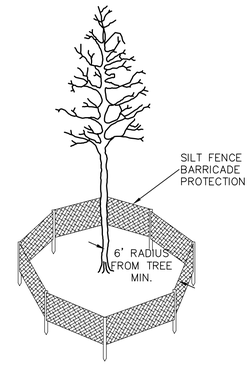

TREE PROTECTION DETAIL

NOT TO SCALE

NOTES:

1.) USE OF TYPE A-2 AND A-3 PIPE BEDDING TO BE DETERMINED IN THE FIELD BY THE ENGINEER.
2.) 10" MAX. FOR PIPE DIAMETER LESS THAN 24"; 12" MAX. FOR PIPE DIAMETER 24" AND LESS THAN 42"; 24" MAX. FOR PIPE DIAMETER 42" AND OVER.
3.) 4" MAX. FOR PIPE 16" DIAMETER & LESS; 6" MAX. FOR PIPE 18" TO 36" DIAMETER; AND 9" MAX. FOR PIPE 42" DIAMETER AND LARGER.
4.) PIPE INSTALLATION SHALL BE IN ACCORDANCE WITH THE MANUFACTURER'S WRITTEN INSTRUCTIONS.
5.) THICKNESS TO MATCH EXISTING OR BE 6" MINIMUM, WHICHEVER IS GREATER.
6.) SHEETING ORDERED LEFT IN PLACE TO BE CUT OFF 24" BELOW FINISH GRADE OR 12" BELOW SUBGRADE.
7.) BASE SHALL BE COMPACTED 6" MINIMUM THICKNESS OF APPROVED MATERIAL.
8.) BACKFILL AASHTO M-145 SHALL BE PLACED IN LAYERS NOT TO EXCEED 6 INCHES. EACH LAYER SHALL BE THOROUGHLY TAMPED AND/OR ROLLED TO 98% AASHTO T-180 DENSITY.
9.) DRIVEWAYS SHALL BE CONSTRUCTED IN ACCORDANCE WITH THE LATEST ADOPTED CONSTRUCTION STANDARDS OF THE MANATEE COUNTY TRANSPORTATION DEPARTMENT.
10.) IF THE DRIVEWAY IS 12' OR WIDER, SAWCUT AN EXPANSION JOINT ALONG THE CENTER OF THE DRIVEWAY (3/16" WIDE AND 1 1/2" DEEP) AFTER THE CONCRETE HAS SET.
11.) IF THERE IS AN EXISTING EXPANSION JOINT WITHIN 3' OF THE PROPOSED JOINT, EXTEND DRIVEWAY REPLACEMENT TO THE EXISTING JOINT.
12.) TRACER WIRE NOT REQUIRED FOR GRAVITY SEWERS.

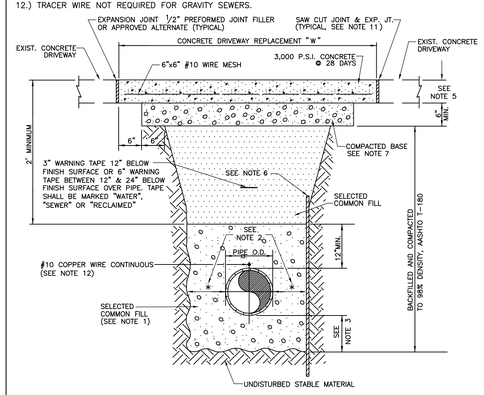

MANATEE COUNTY PUBLIC WORKS DEPARTMENT				
REV.BY	DATE		TRENCH WITH CONCRETE DRIVEWAY SURFACE TYPE A-1 PIPE BEDDING	UG-14
CLB/KE	6/03			
JAA/JB	10/08	MARCH 17, 2009		
JAA/JEA	02/09	DATE OF APPROVAL		

NOTES:

1.) USE OF TYPE A-2 AND A-3 PIPE BEDDING TO BE DETERMINED IN THE FIELD BY THE ENGINEER.
2.) 10" MAX. FOR PIPE DIAMETER LESS THAN 24"; 12" MAX. FOR PIPE DIAMETER 24" AND LESS THAN 42"; 24" MAX. FOR PIPE DIAMETER 42" AND OVER.
3.) 4" MAX. FOR PIPE 16" DIAMETER & LESS; 6" MAX. FOR PIPE 18" TO 36" DIAMETER; AND 9" MAX FOR PIPE 42" DIAMETER AND LARGER.
4.) PIPE INSTALLATION SHALL BE IN ACCORDANCE WITH THE MANUFACTURER'S WRITTEN INSTRUCTIONS.
5.) BACKFILL AASHTO M-145 SHALL BE PLACED IN LAYERS NOT TO EXCEED 6 INCHES FOR SELECTED COMMON FILL AND NOT TO EXCEED 12 INCHES FOR COMMON FILL. EACH LAYER SHALL BE THOROUGHLY TAMPED AND/OR ROLLED TO 98% AASHTO T-180 DENSITY.
6.) TRACER WIRE NOT REQUIRED FOR GRAVITY SEWERS.

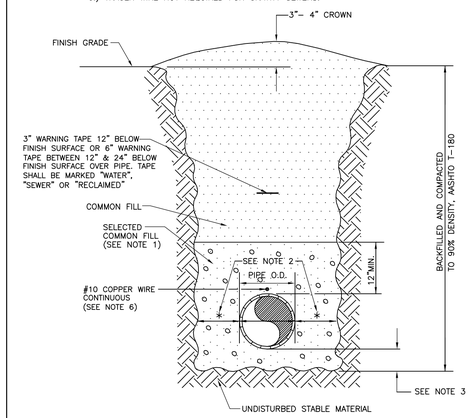

MANATEE COUNTY PUBLIC WORKS DEPARTMENT				
REV.BY	DATE		TRENCH WITH UNIMPROVED SURFACE TYPE A-1 PIPE BEDDING	UG-11
CLB/KE	02/03			
JAA/JB	10/08	MARCH 17, 2009		
JAA/JEA	02/09	DATE OF APPROVAL		

NOTES:

1.) USE OF TYPE A-2 AND A-3 PIPE BEDDING TO BE DETERMINED IN THE FIELD BY THE ENGINEER.
2.) 10" MAX. FOR PIPE DIAMETERS LESS THAN 24"; 12" MAX. FOR PIPE DIAMETER 24" AND LESS THAN 42"; 24" MAX. FOR PIPE DIAMETER 42" AND OVER.
3.) 4" MAX. FOR PIPE 16" DIAMETER & LESS; 6" MAX. FOR PIPE 18" TO 36" DIAMETER; AND 9" MAX FOR PIPE 42" DIAMETER AND LARGER.
4.) PIPE INSTALLATION SHALL BE IN ACCORDANCE WITH THE MANUFACTURER'S WRITTEN INSTRUCTIONS.
5.) BACKFILL AASHTO M-145 SHALL BE PLACED IN LAYERS NOT TO EXCEED 6 INCHES. EACH LAYER SHALL BE THOROUGHLY TAMPED AND/OR ROLLED TO 98% AASHTO T-180 DENSITY.
6.) THICKNESS TO MATCH EXISTING OR BE 6" MINIMUM, WHICHEVER IS GREATER.
7.) SHEETING ORDERED LEFT IN PLACE TO BE CUT OFF 24" BELOW FINISHED GRADE OR 12" BELOW SUBGRADE.
8.) BASE SHALL BE 8" MINIMUM THICKNESS CRUSHED CONCRETE. SAND ASPHALT BASE WILL BE AN ACCEPTABLE ALTERNATIVE.
9.) BACKFILL AASHTO M-145 SHALL BE PLACED IN LAYERS NOT TO EXCEED 6 INCHES. EACH LAYER SHALL BE THOROUGHLY TAMPED AND/OR ROLLED TO 98% AASHTO T-180 DENSITY.
10.) TEMPORARY PATCHES WILL BE INSTALLED TO PROVIDE A SMOOTH ALL WEATHER SURFACE AT ALL TIME. PERMANENT REPLACEMENT TO BE MADE AS SOON AS POSSIBLE.
11.) RESTORE SIGNAGE & MARKING WITH THERMOPLASTIC PER FDOT STANDARDS, LATEST EDITION.
12.) TRACER WIRE NOT REQUIRED FOR GRAVITY SEWERS.
13.) NOTES 5.) THRU 11.) ARE MINIMUM REQUIREMENTS. REFER TO MANATEE COUNTY HIGHWAY AND TRAFFIC STANDARDS FOR ADDITIONAL REQUIREMENTS.

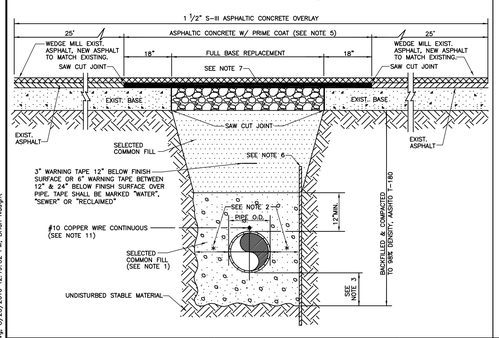

MANATEE COUNTY PUBLIC WORKS DEPARTMENT				
REV.BY	DATE		TRENCH WITH ASPHALT PAVEMENT SURFACE TYPE A-1 PIPE BEDDING	UG-12
CLB/KE	02/05			
JAA/JB	10/08	MARCH 17, 2009		
JAA/JEA	02/09	DATE OF APPROVAL		

NOTES:

1.) 10" MAX. FOR PIPE DIAMETER LESS THAN 24"; 12" MAX. FOR PIPE DIAMETER 24" AND LESS THAN 42"; 24" MAX. FOR PIPE DIAMETER 42" AND OVER.
2.) 4" MAX. FOR PIPE 16" DIAMETER AND LESS; 6" MAX. FOR PIPE DIAMETER 18" TO 36" AND 9" MAX. FOR PIPE DIAMETER 42" AND OVER.
3.) PIPE INSTALLATION SHALL BE IN ACCORDANCE WITH MANUFACTURER'S WRITTEN INSTRUCTIONS.
4.) BACKFILL AASHTO M-145 SHALL BE PLACED IN LAYERS NOT TO EXCEED 6 INCHES. EACH LAYER SHALL BE THOROUGHLY TAMPED AND/OR ROLLED TO 98% AASHTO T-180 DENSITY.
5.) TRACER WIRE NOT REQUIRED FOR GRAVITY SEWERS.

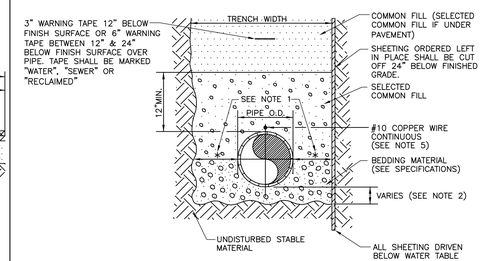

MANATEE COUNTY PUBLIC WORKS DEPARTMENT				
REV.BY	DATE		TRENCH WITH TYPE A-2 PIPE BEDDING	UG-15
CLB/KE	08/05			
JAA/JB	10/08	MARCH 17, 2009		
JAA/JEA	02/09	DATE OF APPROVAL		

THRUST BLOCK DIMENSIONS B ft. x d inches												
PIPE SIZE	90°BEND		45°BEND		22.5°BEND		11.25°BEND		DEAD END & TEE		45° WYE	
(IN.)	B	d	B	d	B	d	B	d	B	d	B	d
4	1.5	3 1/2	1.1	3 1/2	0.8	3 1/2	0.6	3 1/2	1.3	3 1/2	1.1	3 1/2
6	2.2	5 1/4	1.6	3 3/4	1.2	3 1/2	0.8	3 1/2	1.9	4 1/2	1.6	3 3/4
8	2.9	7	2.1	5	1.5	3 1/2	1.1	3 1/2	2.4	5 7/4	2.0	4 7/4
10	3.5	8 1/2	2.6	6 1/4	1.9	4 1/2	1.3	3 1/2	3.0	7 1/4	2.5	6
12	4.2	10	3.1	7 1/2	2.2	5 1/4	1.6	3 3/4	3.5	8 1/2	3.0	7 1/4
14	4.9	11 3/4	3.6	8 3/4	2.6	6 1/4	1.8	4 1/4	4.1	9 3/4	3.4	8 1/4
16	5.5	13 1/4	4.1	9 3/4	2.9	7	2.1	5	4.7	11 1/4	3.9	9 1/4
18	6.2	15	4.6	11	3.3	8	2.3	5 1/2	5.2	12 1/2	4.4	10 1/2
20	6.9	16 1/2	5.0	12	3.6	8 3/4	2.6	6 1/4	5.8	14	4.9	11 1/4
24	8.2	19 3/4	6.0	14 1/2	4.3	10 1/4	3.1	7 1/2	6.9	16 1/2	5.8	14
30	10.1	24 1/4	7.5	18	5.3	12 3/4	3.8	9	8.5	20 1/2	7.2	17 1/4
36	12.1	29	8.9	21 1/4	6.4	15 1/4	4.5	10 3/4	10.2	24 1/2	8.6	20 3/4

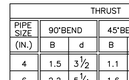

REINFORCEMENT MAT SCHEDULE
FOR DIM."B"BETWEEN 5.75' & 12.5' USE #4 @ 8" EACH WAY
FOR DIM."B"LESS THAN 5.75' USE #3 @ 8" EACH WAY

NOTES:

1. ALL THRUST BLOCKS SHALL BE CAST IN PLACE. FITTINGS ADJACENT TO THRUST BLOCKS SHALL BE WRAPPED IN POLYETHYLENE.
2. THIS TABLE IS BASED ON WATER PRESSURE=180 PSI WITH AN ALLOWABLE SOIL BEARING PRESSURE=2000 PSF, CONCRETE STRENGTH f_c=3000 PSI, REINFORCEMENT f_y=60.0 KSI.THRUST BLOCK SHALL BE CAST AGAINST FIRM UNDISTURBED SOIL.
3. FOR LARGER"B"DIMENSIONS IT IS NECESSARY TO CHECK THAT PIPE IS SUFFICIENTLY DEEP TO ALLOW 15" MIN. SOIL COVER OVER TOP EDGE OF THRUST BLOCK.
4. RESTRAINED JOINTS SHALL BE USED IN LIEU OF THRUST BLOCKS TO SAVE SPACE. THRUST BLOCKS SHALL BE USED IN SITUATIONS WHERE THRUST BLOCKS AND RESTRAINED JOINTS ARE BOTH REQUIRED.

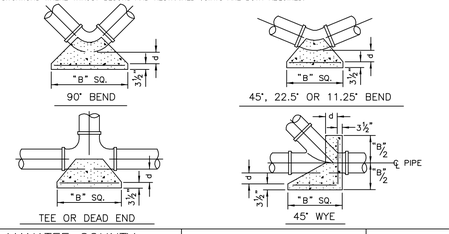

MANATEE COUNTY PUBLIC WORKS DEPARTMENT				
REV.BY	DATE		CONCRETE THRUST BLOCKS	UG-7
CLB/KE	2/05			
JAA/JB	2/09	MARCH 17, 2009		
		DATE OF APPROVAL		

* MODIFIED FROM CITY STANDARD

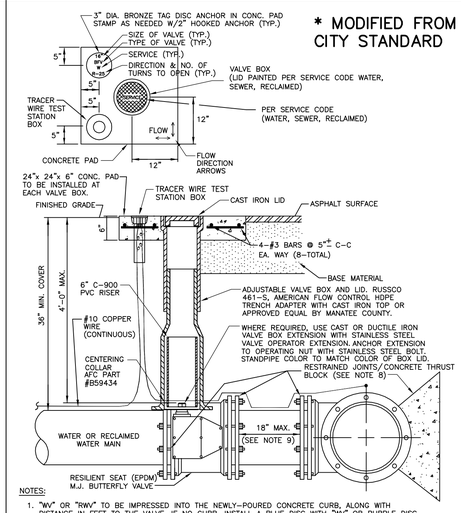

NOTES:

1. "WV" OR "RWV" TO BE IMPRESSED INTO THE NEWLY-POURED CONCRETE CURB, ALONG WITH DISTANCE IN FEET TO THE VALVE. IF NO CURB, INSTALL A BLUE DISC WITH "WV" OR PURPLE DISC WITH "RWV" AND A 1/8"x1" GALVANIZED STEEL SCREW IN THE EDGE OF THE PAVEMENT WITH THE FOOTAGE FROM THE DISC TO THE VALVE.
2. ALL EXISTING AND PROPOSED VALVE BOXES SHALL BE ADJUSTED TO FINISHED GRADES AS DETERMINED IN THE FIELD.
3. WATER VALVES SHALL NOT BE PLACED IN HANDICAPPED RAMPS.
4. PRECAST CONCRETE PADS & THRUST BLOCKS SHALL NOT BE USED.
5. ALL EXPOSED EDGES OF CONCRETE SHALL BE CHAMFERED 1/2".
6. FOR VALVES 16" AND LARGER, USE BUTTERFLY VALVES.
7. "FLOW" AND FLOW DIRECTION ARROWS TO BE IMPRESSED INTO NEWLY POURED CONCRETE PAD.
8. CONCRETE THRUST BLOCK IS ALSO REQUIRED UNLESS RESTRAINED JOINT LENGTH IS TREATED AS A PLUG SHOWN IN STANDARD DETAIL UG-8
9. SHOULD THERE BE AN OBSTACLE/CONFLICT IN INSTALLING THE VALVE, THE ENGINEER OF RECORD MAY PROPOSE A REVERSE TAP, ETC. AND SEPARATE APPROVAL SHALL BE OBTAINED FROM MANATEE COUNTY.

MANATEE COUNTY PUBLIC WORKS DEPARTMENT				
REV.BY	DATE		BUTTERFLY VALVE, BOX, LID AND TAG	UW-3
CLB/KE	08/05			
JAA/JB	10/08	MARCH 17, 2009		
JAA/JEA	02/09	DATE OF APPROVAL		

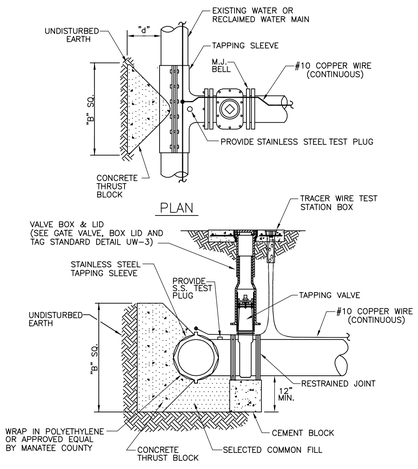

NOTES:

1. NO CUTS SHALL BE MADE BEFORE:
   (A) A 60 MINUTE TEST OF 180 PSI FOR WATER OR 150 PSI FOR SEWER IS MADE.
   (B) ALL FITTINGS TO BE WRAPPED WITH 20 MIL VISQUEEN AT THRUST BLOCK.
   (C) ALL TAPS ON CONCRETE WATER MAINS AND LARGER THAN 12" ARE TO BE MADE BY A MANATEE COUNTY APPROVED TAPPING COMPANY. ALL MATERIALS TO BE SUPPLIED BY THE CONTRACTOR.
2. ALL TAPS MUST BE OF A SMALLER SIZE THAN THE MAIN BEING TAPPED & PLACED NO CLOSER THAN 30" OR A DISTANCE EQUAL TO (1) MAIN PIPE DIAMETER PLUS (2) TAP PIPE DIAMETERS (WHICHEVER IS LARGER) FROM A JOINT OR FITTING.
3. CONTRACTOR TO SUPPLY A DRY HOLE FOR TAPPING CREW TO WORK IN AND A BACK-HOE TO LOWER TAPPING MACHINE INTO THE HOLE.
4. THRUST BLOCK IS REQUIRED AND INCLUDED IN EVERY TAP. SEE CONCRETE THRUST BLOCK DETAIL FOR DIMENSIONS "B" & "d".
5. TRACER WIRE TEST STATION BOX IS REQUIRED AT CONNECTIONS TO EXISTING MAINS.

MANATEE COUNTY PUBLIC WORKS DEPARTMENT				
REV.BY	DATE		TAPPING SLEEVE AND VALVE	UW-4
CLB/KE	08/05			
JAA/JB	10/08	MARCH 17, 2009		
JAA/JEA	02/09	DATE OF APPROVAL		

REV.NO.	DESCRIPTIONS	DATE

REVISIONS

SEAL

MATTHEW S. LOVE, P.E. No. 66118

SEAL

McKIM&CREED
1365 Hamlet Avenue
Clearwater, Florida 33756
Phone: (727)442-7196, Fax: (727)461-3827
EB0006691
www.mckimcreed.com

MANATEE COUNTY, FLORIDA

SWWRF RECLAIMED WATER AUTOMATION

MECHANICAL DETAILS 1

DATE:	AUGUST 2010
MCE PROJ. #	1024-0128
DRAWN	QES
DESIGNED	MSL
CHECKED	JSL
PROJ. MGR.	MSL

SCALE: HORIZONTAL: NA; VERTICAL: NA

DRAWING NUMBER: M-1

STATUS: ISSUE FOR BID

REVISION

S:\1024\01128\05-Drawings\Mechanical\M-1 DETAILS-1024012B.dwg, 8/23/2010 12:18:32 PM, Brian Nagel

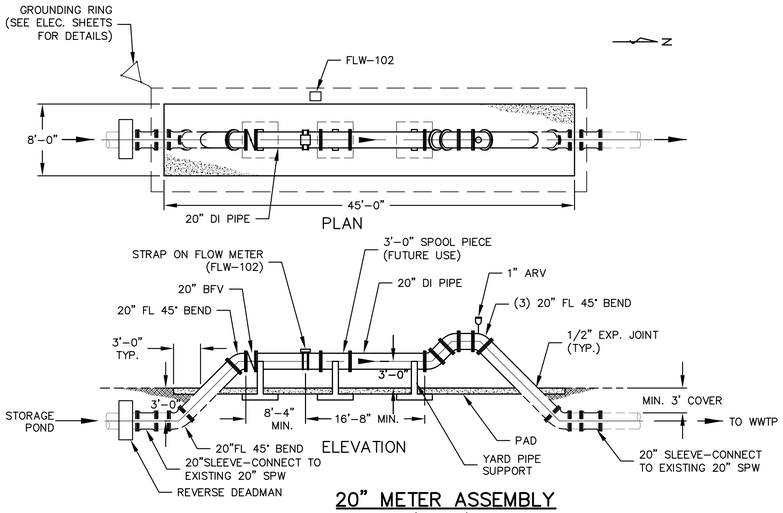

20" METER ASSEMBLY

1/8"=1'-0" (FLW-102)

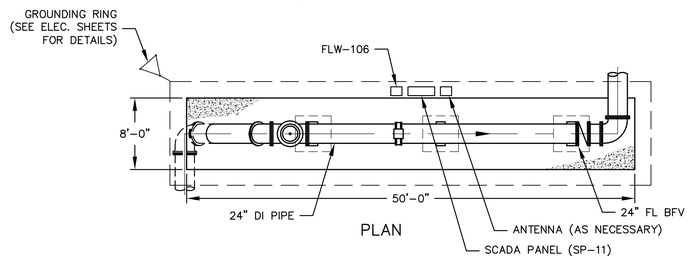

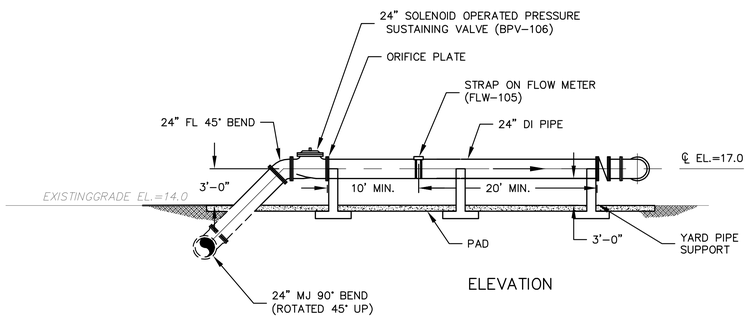

24" METER ASSEMBLY

1/8"=1'-0" (BPV-106, FLW-105, SP-11)

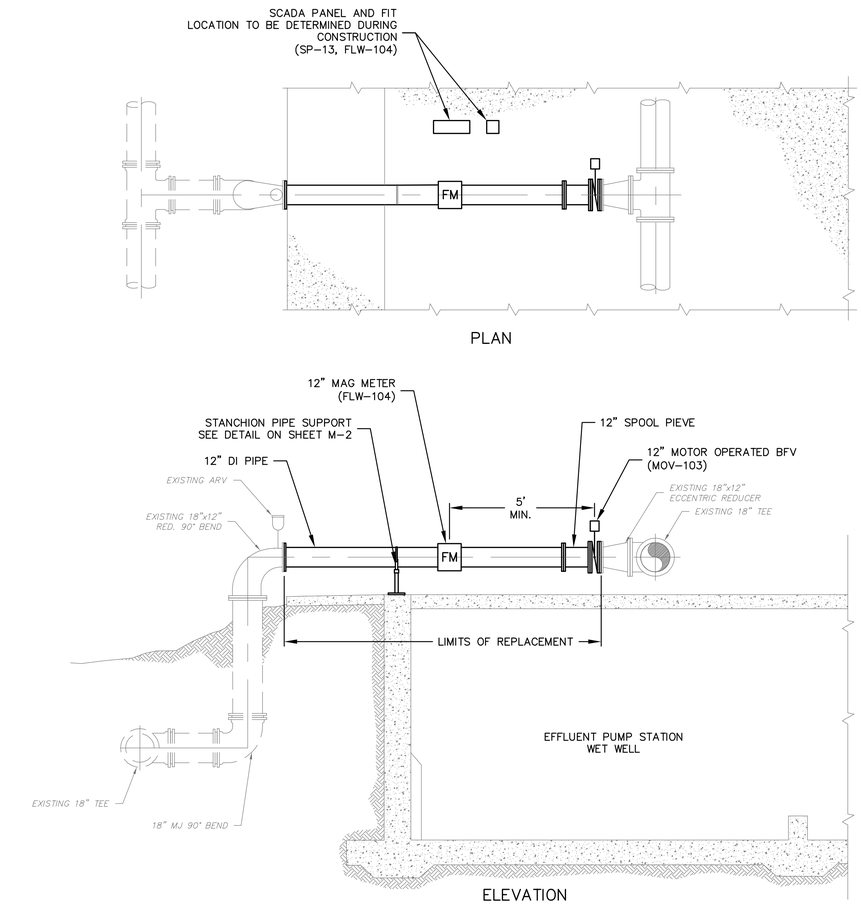

IRRIGATION METER ASSEMBLY

1/4" = 1'-0" (FLW-104, MOV-103, SP-13)

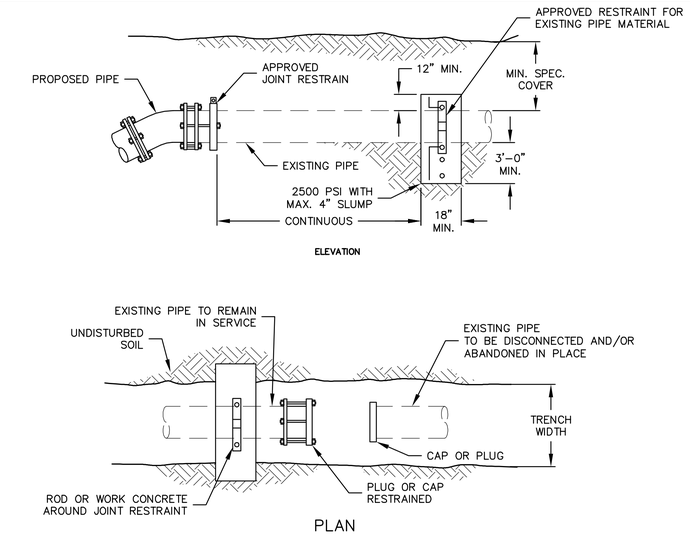

NOTE:

1. FITTING CONNECTION TO EXISTING PIPE AND REVERSE DEADMAN MUST BE PART OF ONE INTERGAL JOINT OF PIPE
2. REVERSE DEADMAN BEARING AREA SHALL NOT BE LESS THAN THAT SHOWN IN THE THRUST BLOCK DETAIL.
3. CONTRACOTR SHALL PROVIDE FINAL REVERSE DEADMAN DESIGN FOR APPROVAL. SUBMITTAL MUST BE SIGNED AND SEALED BY A STRUCTURAL ENGINEER LICENSED IN THE STATE OF FLORIDA..

REVERSE DEADMAN DETAIL

NTS

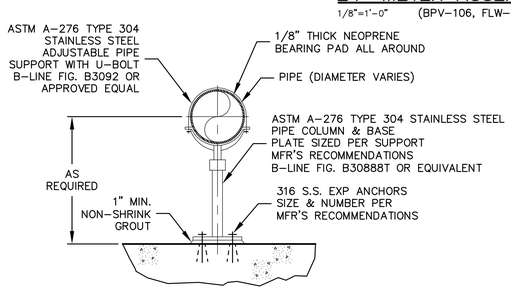

STANCHION PIPE SUPPORT

NOT TO SCALE

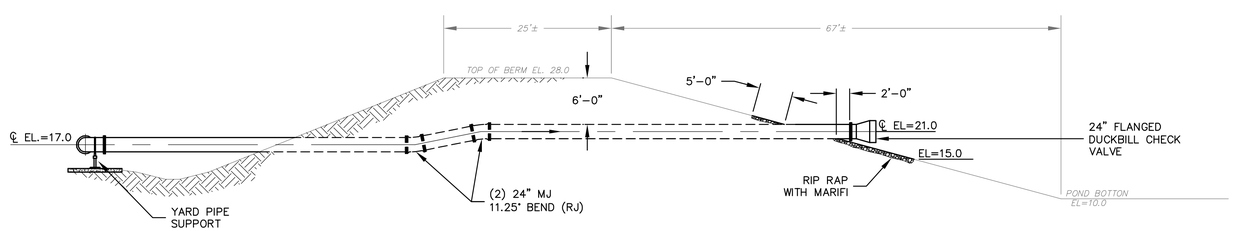

POND SECTION DETAIL

3/32"=1'-0"

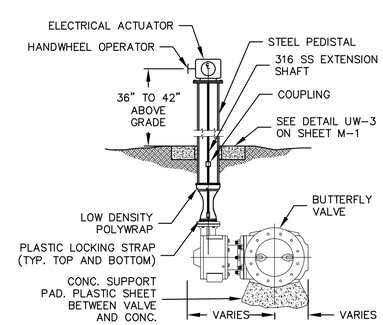

NEW MOTOR OPERATED BURIED BUTTERFLY VALVE DETAIL

NTS (MOV-100)

REV.NO.	DESCRIPTIONS	DATE

REVISIONS

SEAL

MATTHEW S. LOVE, P.E.
No. 66118

SEAL

McKIM&CREED
1365 Hamlet Avenue
Clearwater, Florida 33756
Phone: (727)442-7196, Fax: (727)461-3827
EB0006691
www.mckimcreed.com

MANATEE COUNTY, FLORIDA

SWWRF RECLAIMED WATER AUTOMATION

MECHANICAL DETAILS 2

DATE:	AUGUST 2010
MCE PROJ. #	1024-0128
DRAWN	QES
DESIGNED	MSL
CHECKED	JSL
PROJ. MGR.	MSL

SCALE
HORIZONTAL: AS SHOWN
VERTICAL: NA

DRAWING NUMBER
M-2

STATUS: ISSUE FOR BID
REVISION

S:\1024\01285\05-Drawings\Mechanical\M-2 DETAILS-1024012B.dwg, 9/7/2010 9:16:46 AM, Brian Naught

IRRIGATION METER ASSEMBLY DEMO
NTS

ABW FILTERS 1 & 2 METER ASSEMBLY
NTS

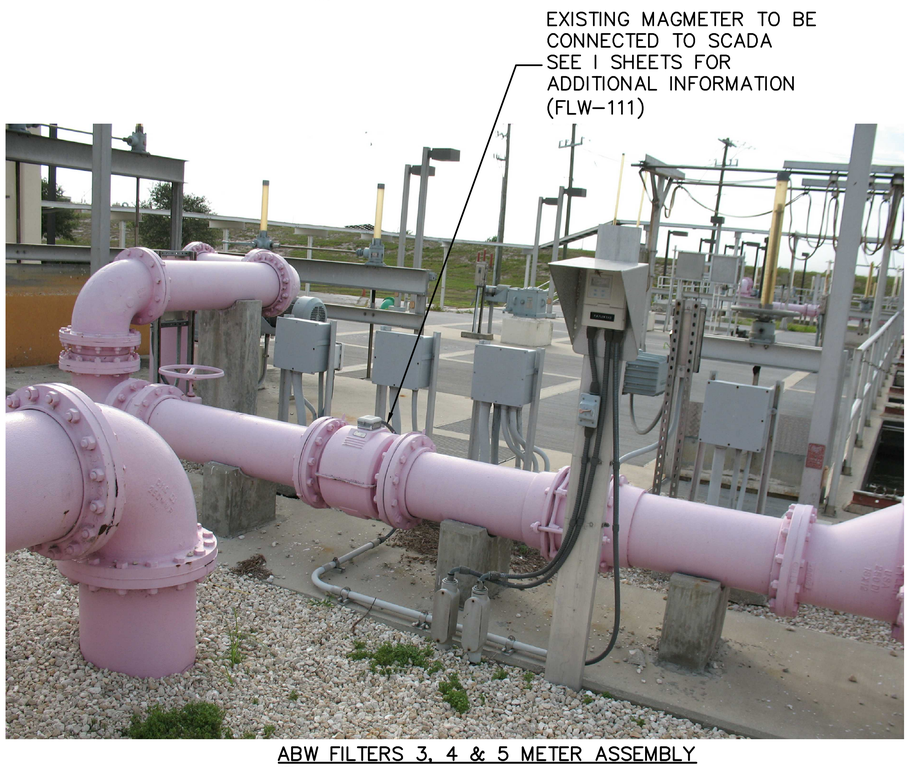

ABW FILTERS 3, 4 & 5 METER ASSEMBLY
NTS

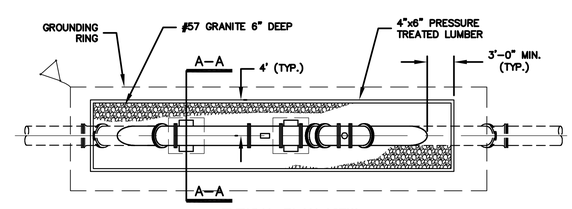

TYPICAL PLAN VIEW

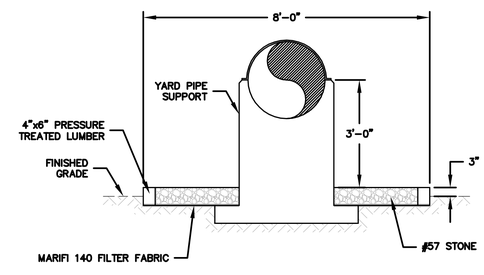

SECTION A-A
NTS

TYPICAL MIRAFI PAD DETAIL
SCALE: 1/8"=1'-0"

REV.NO.	DESCRIPTIONS	DATE

REVISIONS

SEAL

MATTHEW S. LOVE, P.E.
No. 66118

SEAL

McKIM&CREED
1365 Hamlet Avenue
Clearwater, Florida 33756
Phone: (727)442-7196, Fax: (727)461-3827
EB0006691
www.mckimcreed.com

MANATEE COUNTY, FLORIDA

SWWRF RECLAIMED WATER AUTOMATION

MECHANICAL DETAILS 3

DATE:	AUGUST 2010
MCE PROJ. #	1024-0128
DRAWN	QES
DESIGNED	MSL
CHECKED	JSL
PROJ. MGR.	MSL

SCALE
HORIZONTAL: AS SHOWN
VERTICAL: NA

DRAWING NUMBER
M-3

STATUS: ISSUE FOR BID
REVISION

S:\1024\01280\Drawings\Mechanical\M-3 DETAILS-1024012B.dwg, 9/7/2010 9:12:25 AM, Brian Haught

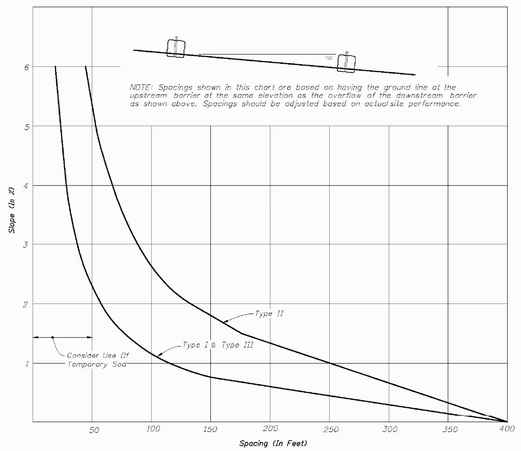

CHART I

RECOMMENDED SPACING FOR SYNTHETIC BALES OR BALE TYPE BARRIERS AND TYPE III SILT FENCE

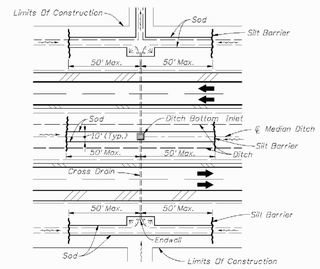

DITCH INSTALLATIONS AT DRAINAGE STRUCTURES

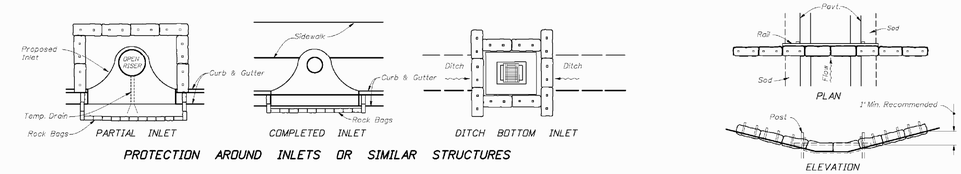

PROTECTION AROUND INLETS OR SIMILAR STRUCTURES

SYNTHETIC BALES OR BALE TYPE BARRIERS FOR PAVED DITCHES

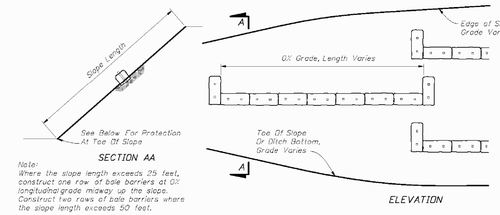

ALONG FILL SLOPE

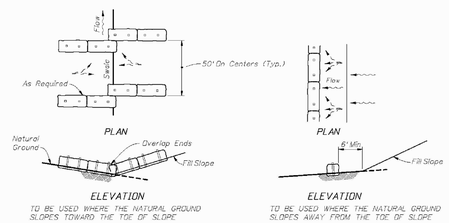

AT TOE OF SLOPE

BARRIERS FOR FILL SLOPES

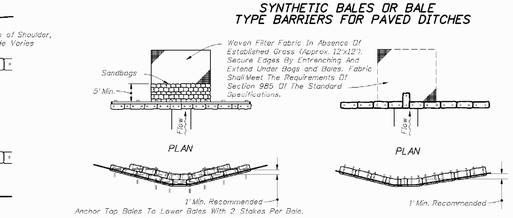

SYNTHETIC BALES OR BALE TYPE BARRIERS FOR UNPAVED DITCHES

NOTES FOR SYNTHETIC BALES OR BALE TYPE BARRIERS

1. Type I and II Synthetic Barrier should be spaced in accordance with Chart I, Sheet 1.
2. Bales shall be trenched 3" to 4" and anchored with 2-1" x 2" for 1" dia.) x 4' wood stakes. Stakes of other material or shape providing equivalent strength may be used if approved by the Engineer. Stakes other than wood shall be removed upon completion of the project.
3. Rails and posts shall be 2" x 4" wood. Other materials providing equivalent strength may be used if approved by the Engineer.
4. Adjacent bales shall be butted firmly together.
5. Where used in conjunction with silt fence, bales shall be placed on the upstream side of the fence.
6. Bales to be paid for under the contract unit price for Synthetic Bales, LF. The unit price shall include the cost of filter fabric for Type I and II Barriers. Sandbags shall be paid for under the unit price for Sandbagging, CY. Rock bags to be paid for under the contract unit price for Rock Bags, EA.

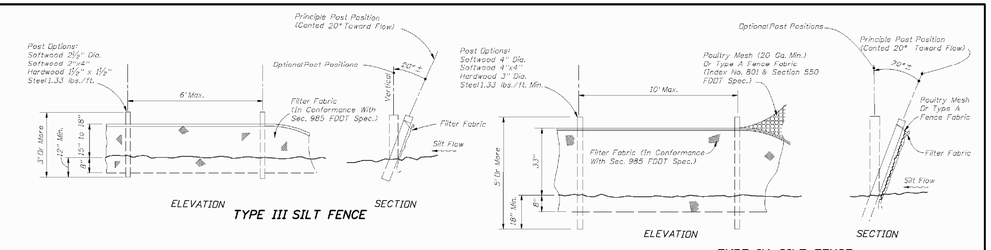

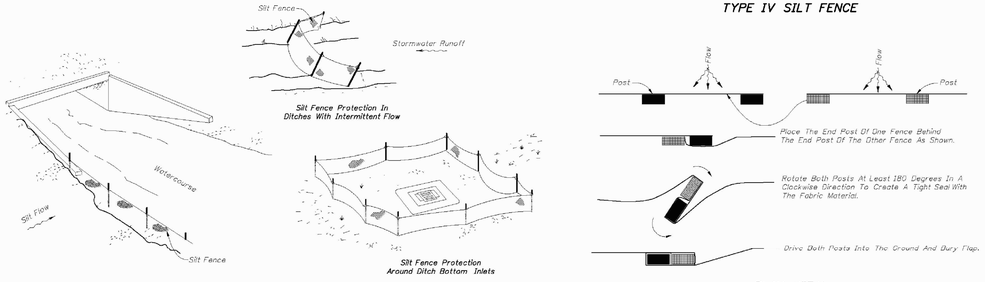

NOTES FOR SILT FENCES

1. Type III Silt Fence to be used at most locations. Where used in ditches, the spacing for Type III Silt fence shall be in accordance with Chart 1, Sheet 1.
2. Type IV Silt Fence to be used where large sediment loads are anticipated. Suggested use is where fill slope is 1:2 or steeper and length of slope exceeds 25 feet. Avoid use where the detained water may back into travel lanes or off the right of way.
3. Do not construct silt fences across permanent flowing watercourses. Silt fences are to be at upland locations and turbidity barriers used at permanent bodies of water.
4. Where used as slope protection, Silt Fence is to be constructed on 0% longitudinal grade to avoid channelizing runoff along the length of the fence.
5. Silt Fence to be paid for under the contract unit price for Staked Silt Fence, (LF).

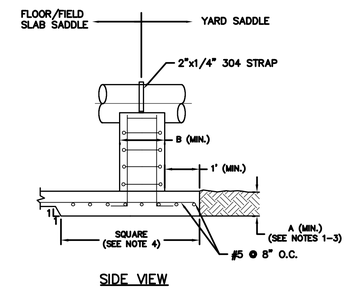

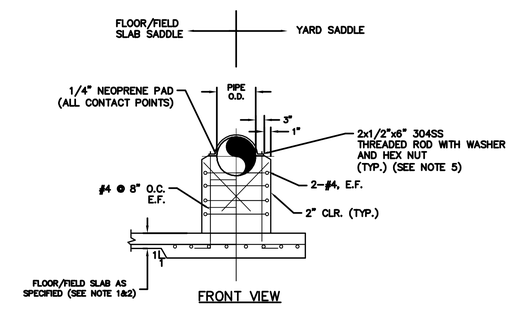

GENERAL NOTES:

1. PIPE SUPPORT SLAB DEPTH SHALL BE NO LESS THAN ADJOINING FLOOR SLAB.
2. PIPE SUPPORT REINFORCEMENT SHALL BE NO LESS THAN ADJOINING REINFORCEMENT REQUIREMENTS
3. FOR A=10" OR THICIKER, USE 2 LAYERS OF REINF. T/B E/W.
4. SADDLE FOOTER SHALL BE SQUARE (IN INCREMENTS OF 6") AND BE SIZED FOR FULL PIPE CONDITION WITH A MAXIMUM SOIL BEARING CAPACITY OF 500 LBS/SF. BASED ON REQUIRED SUPPORT SPACING.
5. ROD SHALL BE EMBEDED WITH EPOXY GROUT TO A DEPTH OF 6".
6. INCREASE 4" CLEARANCE AS REQUIRED IF BOLT HAS TO BE INSERTED FROM THE SUPPORT SIDE OF THE CONNECTION.
7. SLAB DEPTH (A); 8" FOR OD< 24"
   10" FOR 24" < OD < 42"
8. SADDLE WIDTH (B); 8" FOR OD < 24"
   12" FOR 24" < OD < 42"

YARD PIPE SUPPORT DETAIL

NTS

REV.NO.	DESCRIPTIONS	DATE

REVISIONS

SEAL

MATTHEW S. LOVE, P.E.
No. 66118

SEAL

McKIM&CREED
1365 Hamlet Avenue
Clearwater, Florida 33756
Phone: (727)442-7196, Fax: (727)461-3827
EB0006691
www.mckimcreed.com

MANATEE COUNTY, FLORIDA

SWWRF RECLAIMED WATER AUTOMATION

EROSION CONTROL DETAILS AND MECHANICAL DETAILS 4

DATE:	AUGUST 2010
MCE PROJ. #	1024-0128
DRAWN	BFN
DESIGNED	MSL
CHECKED	JSL
PROJ. MGR.	MSL

SCALE
HORIZONTAL: AS SHOWN
VERTICAL: NA

DRAWING NUMBER
M-4

STATUS: ISSUE FOR BID
REVISION

S:\1024\0128\M5-Drawings\Mechanical\M-4 DETAILS-102401128.dwg, 9/7/2010 8:52:23 AM, Brian Naught

FUNCTION SYMBOL SCHEDULE

	FIRST LETTER		SUCCEEDING–LETTERS		
	MEASURED OR INITIATING VARIABLE	MODIFIER	READOUT OR PASSIVE FUNCTION	OUTPUT FUNCTION	MODIFIER
A	Analysis		Alarm		
B	Burner, Combustion		Programmer		
C	Conductivity (Electrical)			Control	Closed
D	Density or Specific Gravity	Differential			
E	Voltage		Sensor (Primary Element)	Eduction	
F	Flow Rate	Ratio (Fraction)			
G	Gaging		Glass, Viewing Device		
H	Hand				High
I	Current (Electrical)		Indicate		
J	Power	Scan			
K	Time, Time Schedule			Control Station	
L	Level		Light (Pilot)		Low
M	Motor				Middle, Intermediate
N	Vibration				
O	Operation	Offset	Orifice, Restriction		Open
P	Pressure, Vacuum		Point (Test) Connection		
Q	Quantity, Event	Integrate, Totalize	Integrate		
R	Radiation		Record, Print	Regulate	
S	Speed, Frequency	Safety		Switch	
T	Temperature			Transmit	
U	Multivariable	Trend	Multifunction	Multifunction	Multifunction
V	Viscosity	Vacuum		Valve, Damper, Louver, Gate	
W	Weight, Force, Torque		Well		
X	Unclassified		Unclassified	Unclassified	Unclassified
Y				Relay, Compute, Convert	
Z	Position			Final Control Element	Drive, Actuator, Unclassified Final Control Element

BASIC SYMBOLS

MULTIPLE FUNCTION

- OR — FIELD MOUNTED INSTRUMENT OR DEVICE
- OR — FRONT OF PANEL MOUNTED INSTRUMENT ON UCP OR MCC, VFD
- OR — REAR OF PANEL MOUNTED INSTRUMENT ON UCP OR MCC, VFD
- OR — FRONT OF PANEL MOUNTED INSTRUMENT ON MAIN PANEL
- OR — REAR OF PANEL MOUNTED INSTRUMENT ON MAIN PANEL
- OR — PLC AND/OR COMPUTER SOFTWARE COMPONENT (OPERATOR ACCESSIBLE UNDER NORMAL CONDITIONS)
- OR — PLC AND/OR COMPUTER GENERATED COMPONENT (NOT OPERATOR ACCESSIBLE UNDER NORMAL CONDITIONS)
- I/O PLC OR I/O PLC I/O PLC — PLC INPUT/OUTPUT

LINE CODES

- INSTRUMENT SIGNAL
- ELECTRICAL SIGNAL
- DATA LINK
- PNEUMATIC
- CAPILLARY
- SONIC OR R.F.
- HYDRAULIC
- TELEPHONE
- NO ELECTRICAL CONNECTION
- ELECTRICAL CONNECTIONS (INDICATED BY DOTS)
- HEAT TRACED PROCESS
- LINE OR EQUIPMENT
- MATCHLINE
- SHEET — PROCESS LINE OR ELECTRICAL SIGNAL CONTINUATION TO/FROM SHEET NUMBER INDICATED
- CONTINUATION ON SAME SHEET
- CONTINUATION ON FACILITIES
- NOT SHOWN ON DRAWINGS

VALVES, PUMPS & METERS

- FLAME ARRESTOR
- PINCH VALVE
- GATE
- NEEDLE
- BUTTERFLY
- BALL OR ROTARY
- GLOBE
- PLUG OR COCK
- DIAPHRAGM
- CHECK
- DIAPHRAGM CHECK
- CONTROL VALVE POSITIONER
- PRESSURE REGULATING VALVE
- BACKPRESSURE REGULATING VALVE
- PISTON OPERATED
  S=SOLENOID OPERATED
  M=MOTOR OPERATED
  P=PNEUMATIC OPERATED
- DRAIN
- Y=WEIR GATE
  T=SLIDE SLUICE GATE
  I =STOP LOG
- BLIND FLANGE
- PULSATION DAMPENER
- PRESSURE RELIEF OR SAFETY
- 3–WAY
- 4–WAY
- TELESCOPING
- REDUCER
- HOSE CONNECTION
- WAFER/CHECK VALVE

VALVES, PUMPS & METERS (CONT'D)

- FLOAT SWITCH OR FLOAT
- (ARV) AIR RELEASE VALVE
  (ARVV) AIR VACUUM RELEASE VALVE
- ELECTRIC MOTOR
- ORIFICE/ANNUBAR
- AIR DIFFUSER
- LIQUID DIFFUSER
- LE — CAPACITANCE METER
- REGULATOR/FILTER
- SUBMERSIBLE PUMP
- MAG — MAGNETIC METER (INLINE/INSERT)
- LE — ULTRASONIC METER
- VENTURI OR FLOW TUBE
- PROPELLER OR TURBINE METER
- DOPPLER OR TRANSIT TIME FLOW METER
- FI — ROTAMETER
- M — PROGRESSING CAVITY PUMP
- CENTRIFUGAL PUMP
- POSITIVE DISPLACEMENT PUMP
- M — DIAPHRAGM OR METERING PUMP
- EDUCTOR
- STRAINER
- DIAPHRAGM ISOLATOR
- H — HORN
- GRADUATED MEASURING CYLINDER
- CYLINDER HYDRAULIC OR PNEUMATIC
- LATERAL WYE
- RUPTURE DISK
- RESTRAINED FLEX CONN.
- FLEX CONN.
- FILTER AIR/WATER
- CENTRIFUGAL BLOWER
- POSITIVE DISPLACEMENT BLOWER
- MANUAL BAR RACK
- MIXER
- SUBMERSIBLE AERATOR/MIXER (ELECTRIC MOTOR DRIVEN)
- UNION

MISCELLANEOUS SYMBOLS

- P — PURGE CONNECTION
- S — SAMPLE POINT
- INTERLOCK
- X — MULTIPLY
- ÷ — DIVIDE
- > — HIGH SELECT
- < — LOW SELECT
- √ — SQUARE ROOT
- Σ — SUM (ALGEBRAIC)
- f — SPECIAL FUNCTION
- R+B — RATIO PLUS BIAS
- dL/dt — RATE OF RISE (LEVEL)

EQUIPMENT NOTATION

- B = BLOWER OR FAN
- E = ENGINE
- G = GENERATOR
- F = FILTER
- GS = GRINDER/SCREEN
- K = COMPRESSOR
- H = HOIST
- ME = MECHANICAL EQUIPMENT
- MX = MIXER
- P = PUMP
- R = HEAT EXCHANGER
- T = TANK OR SUMP

VALVE DESIGNATIONS

- HV = HAND VALVE
- FCV = FLOW CONTROL VALVE (MODULATING)
- PRV = PRESSURE REGULATING VALVE
- LCV = LEVEL CONTROL VALVE
- FV = FLOW VALVE (NON–MODULATING)
- MV = MUD VALVE
- TV = TELESCOPING VALVE
- CV = CHECK VALVE
- MOV = MOTOR OPERATED VALVE

INSTRUMENT TAG NOTATION

FIC 0 1 01 A

- A — INSTRUMENT QUANTITY SUFFIX
- 01 — INSTRUMENT NUMBER
- 1 — PROCESS AREA
- 0 — PLANT AREA
- FIC — ISA INSTRUMENT FUNCTION

VALVE OPERATION NOTATION

- EFC = ELECTRIC FAIL CLOSE
- AFC = AIR FAIL CLOSE
- EFO = ELECTRIC FAIL OPEN
- AFO = AIR FAIL OPEN
- AFS = AIR FAIL STATIC
- EFS = ELECTRIC FAIL STATIC

CONTROLLER NOTATION

- PV = PROCESS VARIABLE INPUT
- SP = SET POINT INPUT
- C = CONTROL OUTPUT

PLC NOTATIONS

- AI = ANALOG INPUT
- AO = ANALOG OUTPUT
- DI = DISCRETE INPUT
- DO = DISCRETE OUTPUT
- D/A = DISCRETE TO ANALOG CONVERTOR
- SSDC = SURGE SUPPRESSION DEVICE

HAND SWITCH NOTATION

- HOA = HAND–OFF–AUTO
- S/S = START/STOP
- SEL = SELECTOR
- O/C = OPEN/CLOSE
- O/O = ON/OFF
- LOS = LOCKOUT–START
- D/S = DUTY/STANDBY
- FOS = FAST–OFF–SLOW
- OAC = OPEN–AUTO–CLOSE
- OOCA = OPEN–OFF–CLOSE–AUTO
- ROF = REVERSE–OFF–FORWARD
- ROL = RAISE–OFF–LOWER
- F/R = FORWARD/REVERSE
- HOR = HAND–OFF–REMOTE
- LOR = LOCAL–OFF–REMOTE
- SAR = SILENCE–AUTO–RESET

MISCELLANEOUS NOTATIONS

- S/D = SHUTDOWN
- O/R = OVERRIDE
- MCC = MOTOR CONTROL CENTER
- VFD = VARIABLE FREQUENCY DRIVE
- UCP = UNIT CONTROL PANEL
- LCP = LOCAL CONTROL PANEL
- MCP = MASTER CONTROL PANEL
- ES = ELECTRICAL SUPPLY
- IS = INLET SILENCER
- DS = DISCHARGE SILENCER
- SEQ = SEQUENCER/ALTERNATOR
- SA = SURGE ARRESTOR
- DO = DISSOLVED OXYGEN
- ETM = ELAPSED TIME METER
- TURB = TURBIDITY
- US = ULTRASONIC

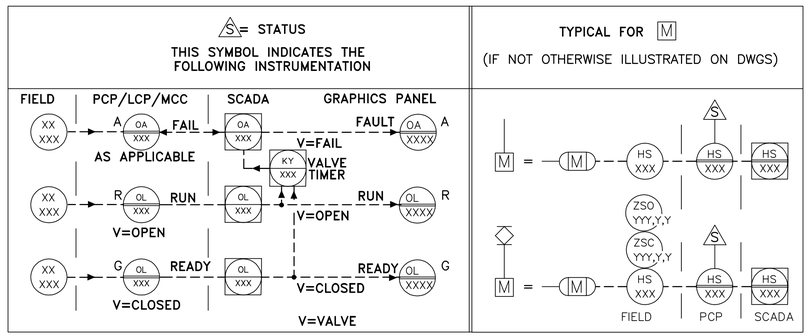

REV.NO.	DESCRIPTIONS	DATE
	REVISIONS	

SEAL

THOMAS E. ROBINSON JR.
P.E. No. 62976

SEAL

McKIM&CREED
1365 Hamlet Avenue
Clearwater, Florida 33756
Phone: (727)442–7196, Fax: (727)461–3827
EB0006691
www.mckimcreed.com

MANATEE COUNTY, FLORIDA

SWWRF RECLAIMED WATER AUTOMATION

PROCESS AND INSTRUMENTATION GENERAL NOTES, LEGEND AND ABBREVIATIONS

DATE:	JULY 2010
MCE PROJ. #	1024–0128
DRAWN	EEB
DESIGNED	EEB
CHECKED	TER
PROJ. MGR.	MSL

SCALE
HORIZONTAL: NA
VERTICAL: NA

DRAWING NUMBER
I-1

STATUS: ISSUE FOR BID
REVISION

S:\1024\0128\80-Drawings\Instrumentation\I-1-1024128.dwg, 7/8/2010 8:59:06 AM, Quint Sheldon

LEGEND:

- FM – EXISTING FLOW METER (C)
- EXISTING PUMP STATION
- EXISTING VALVE
- CCT – CHLORINE CONTACT TANK
- EPS – EFFLUENT PUMP STATION
- MARS – MANATEE AGRICULTURAL REUSE SYSTEM
- EXISTING POND EFFLUENT
- EXISTING PLANT EFFLUENT
- EXISTING GRAVITY FLOW
- EXISTING WEIR GATE
- PDPS – PLANT DRAIN PUMP STATION
- EXISITNG LAKE LEVEL INDICATOR
- PROPOSED DISCONNECT
- PROPOSED EFFLUENT
- PROPOSED POND EFFLUENT
- PROPOSED VALVE
- M – PROPOSED ELECTRIC VALVE OPERATOR
- BPV –BACK PRESSURE SUSTAINING VALVE
- FLW –FLOWMETER
- LIT –LEVEL INDICATOR TRANSMITTER
- MOV –MOTOR OPERATED VALVE

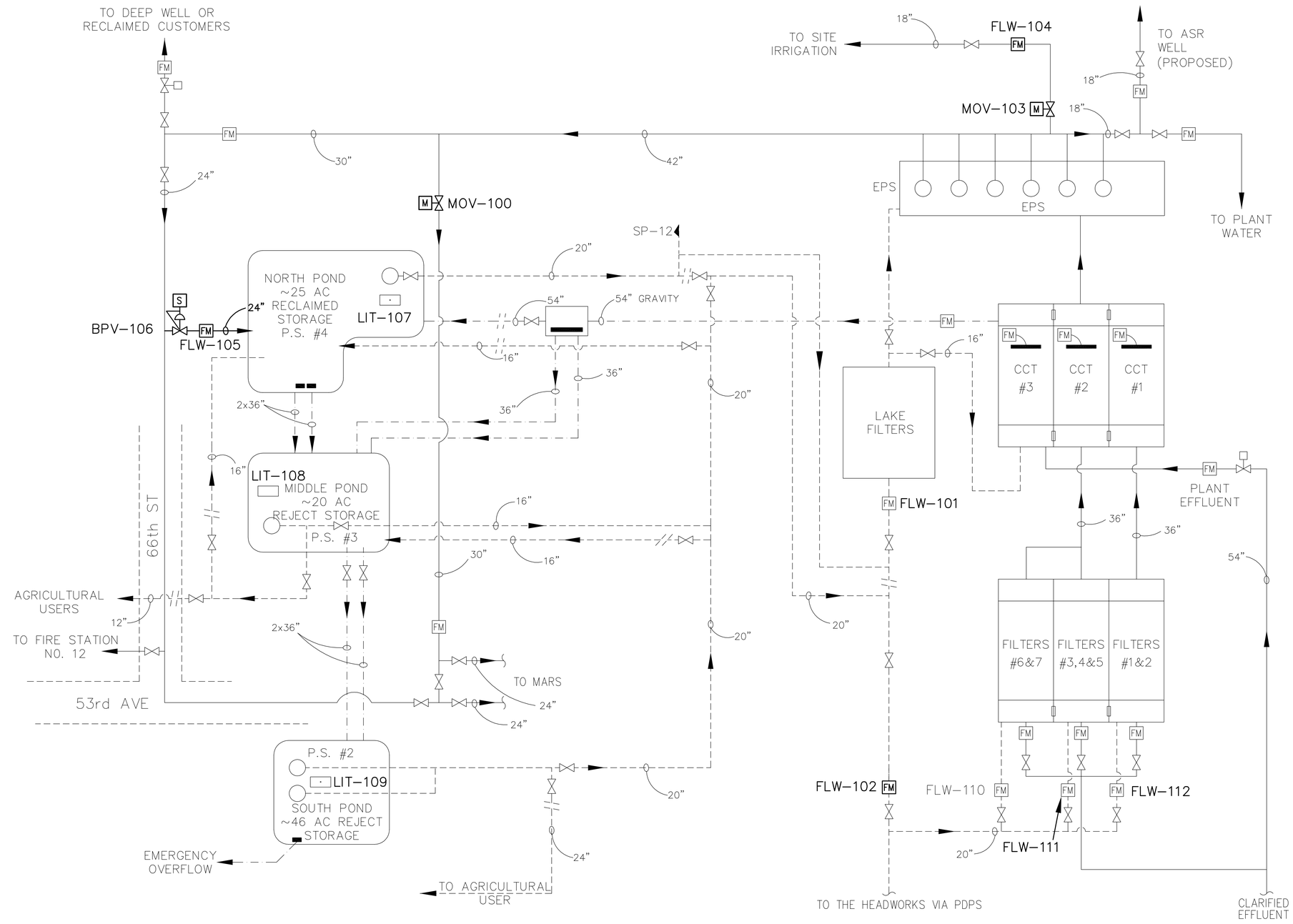

REV.NO.	DESCRIPTIONS	DATE
	REVISIONS	

SEAL

THOMAS E. ROBINSON JR.
P.E. No. 62976

SEAL

McKIM&CREED
1365 Hamlet Avenue
Clearwater, Florida 33756
Phone: (727)442–7196, Fax: (727)461–3827
EB0006691
www.mckimcreed.com

MANATEE COUNTY, FLORIDA

SWWRF RECLAIMED WATER AUTOMATION

PROPOSED EFFLUENT FLOW SCHEMATIC

DATE:	JULY 2010
MCE PROJ. #	1024–0128
DRAWN	QES
DESIGNED	MSL
CHECKED	JSL
PROJ. MGR.	MSL

SCALE
HORIZONTAL: AS SHOWN
VERTICAL: NA

DRAWING NUMBER
I-2

STATUS: ISSUE FOR BID
REVISION

S:\1024\0128\90-Drawings\Instrumentation\I-2-10240128.dwg, 7/9/2010 11:38:21 AM, Quint Shelton

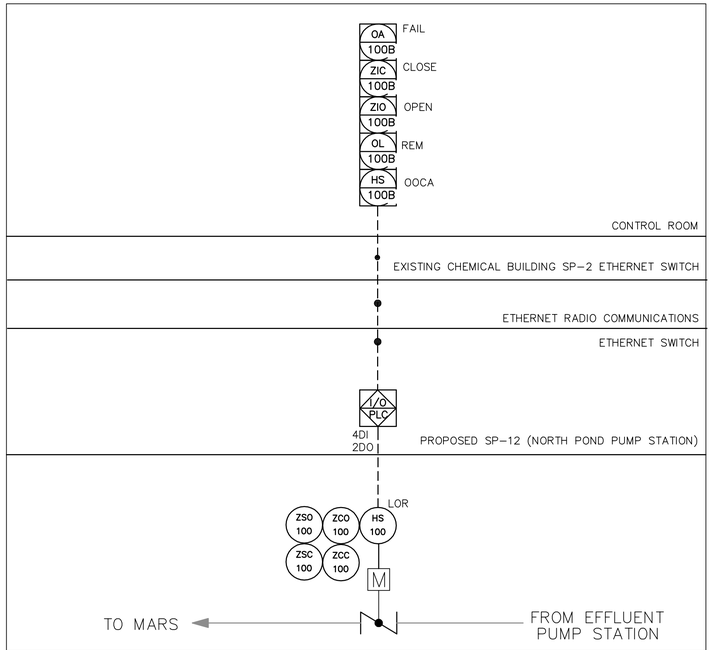

EFFLUENT VALVE TO MARS - LOOP NO. MOV-100

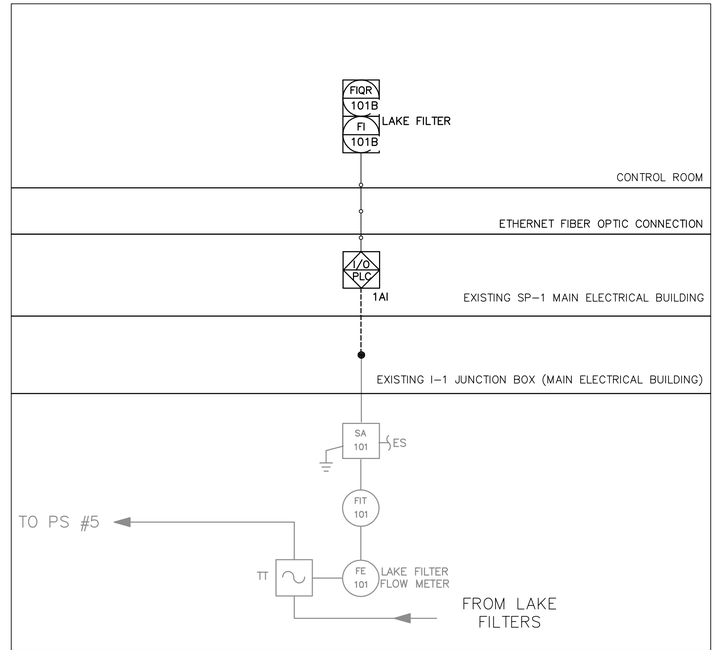

FLOW FROM PS #5 TO LAKE FILTERS LOOP NO. FLW-101

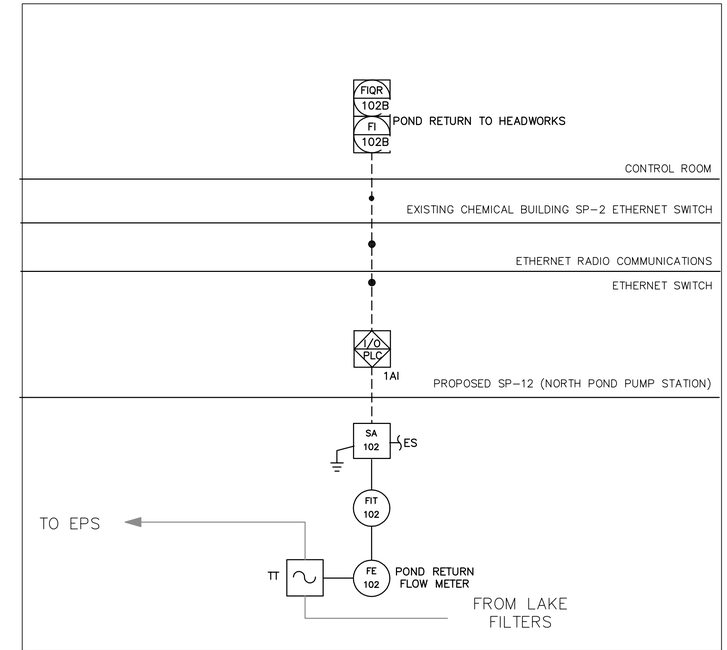

FLOW FROM PONDS TO HEADWORKS LOOP NO. FLW-102

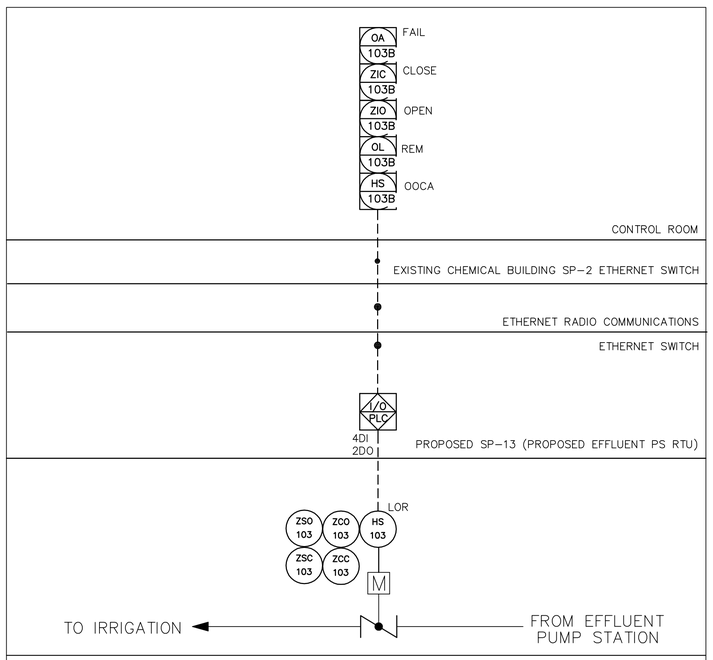

IRRIGATION SITE VALVE - LOOP NO. MOV-103

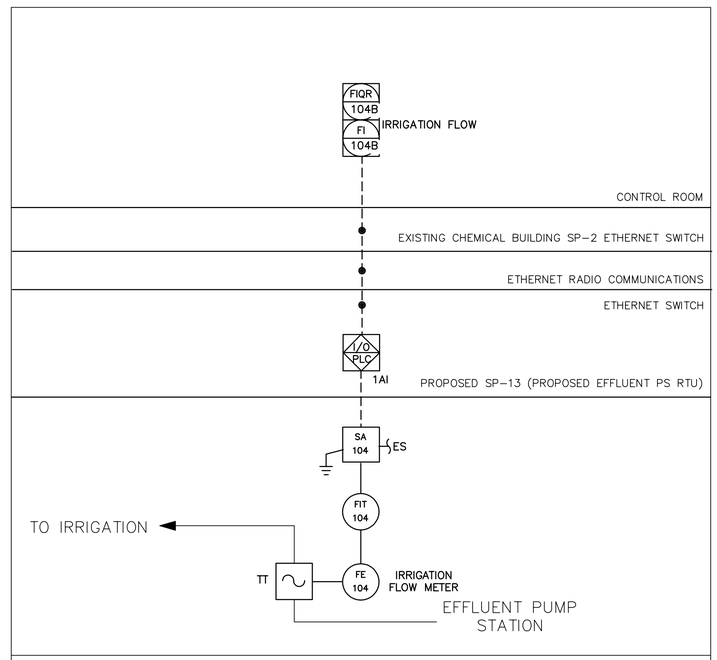

FLOW TO IRRIGATION - LOOP NO. FLW-104

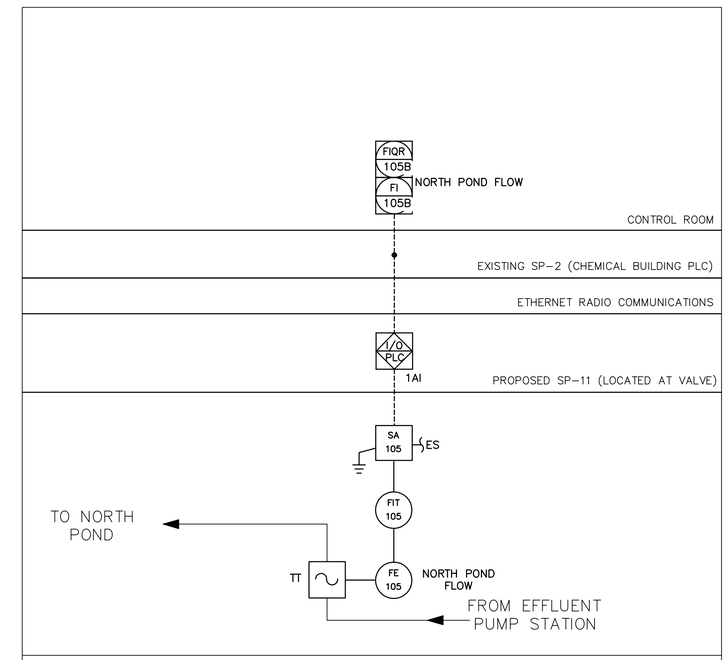

FLOW TO NORTH POND FLOWMETER - LOOP NO. FLW-105

REV.NO.	DESCRIPTIONS	DATE
	REVISIONS	

SEAL

THOMAS E. ROBINSON JR.
P.E. No. 62976

SEAL

McKIM&CREED
1365 Hamlet Avenue
Clearwater, Florida 33756
Phone: (727)442-7196, Fax: (727)461-3827
EB0006691
www.mckimcreed.com

MANATEE COUNTY, FLORIDA

SWWRF RECLAIMED WATER AUTOMATION

PROCESS AND INSTRUMENTATION DIAGRAM
SHEET 1

DATE:	JULY 2010
MCE PROJ. #	1024-0128
DRAWN	EEB
DESIGNED	EEB
CHECKED	TER
PROJ. MGR.	MSL

SCALE
HORIZONTAL: NA
VERTICAL: NA

DRAWING NUMBER
I-3

STATUS: ISSUE FOR BID
REVISION

S:\1024\0128\90-Drawings\Instrumentation\I-3-1024128.dwg, 7/8/2010 8:59:21 AM, Quint Shelton

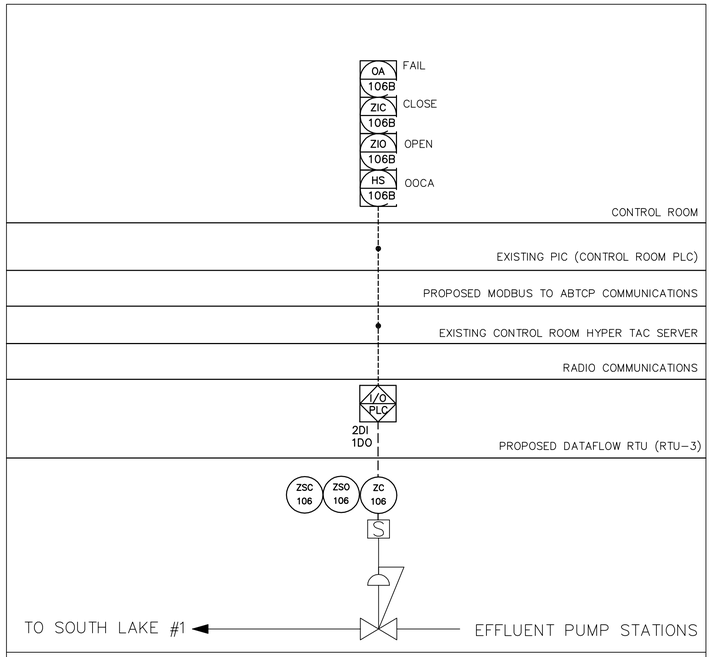

NORTH POND #1 INFLUENT VALVE - LOOP NO. BPV-106

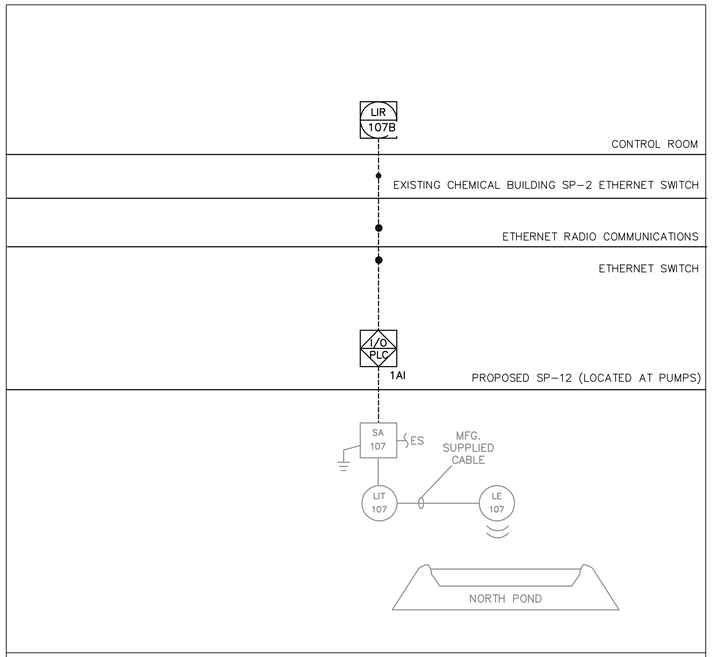

NORTH POND LEVEL - LOOP NO. LIT-107

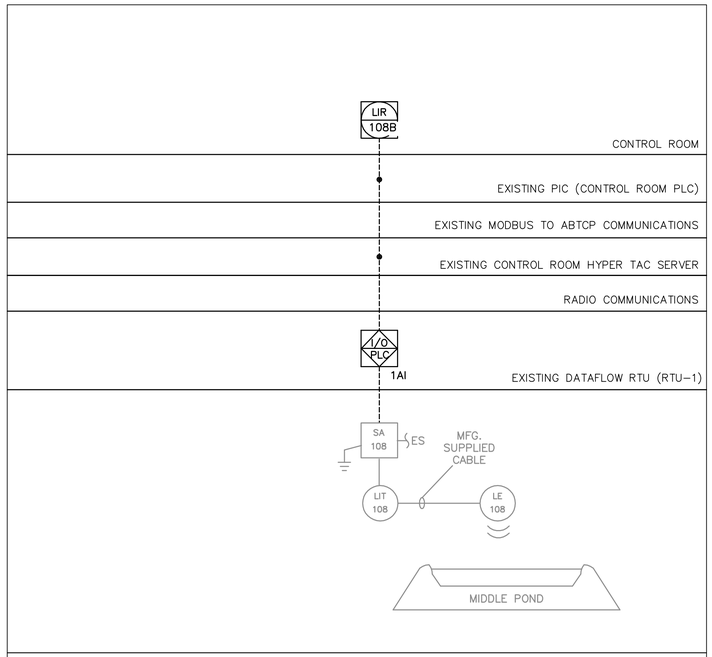

MIDDLE POND LEVEL - LOOP NO. LIT-108

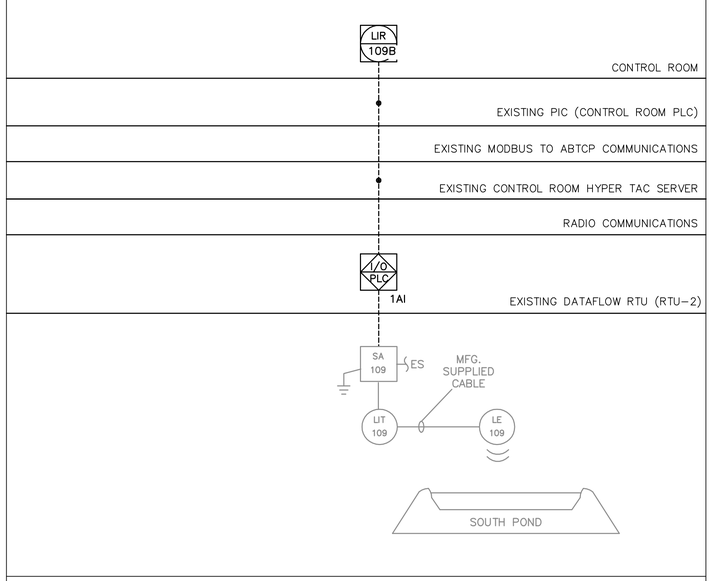

SOUTH POND LEVEL - LOOP NO. LIT-109

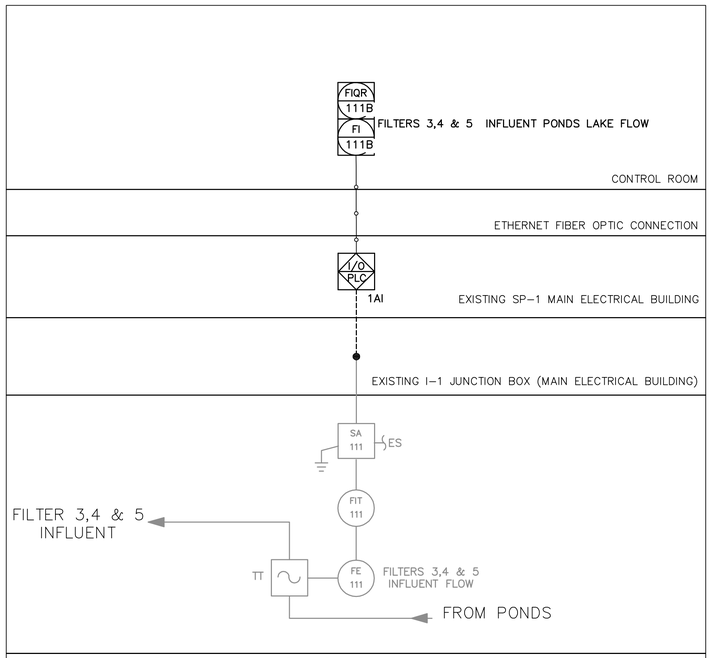

FILTERS 3,4 &5 FLOW FROM PONDS FLOWMETER - LOOP NO. FLW-111

REV.NO.	DESCRIPTIONS	DATE
	REVISIONS	

SEAL

THOMAS E. ROBINSON JR.
P.E. No. 62976

SEAL

McKIM&CREED
1365 Hamlet Avenue
Clearwater, Florida 33756
Phone: (727)442-7196, Fax: (727)461-3827
EB0006691
www.mckimcreed.com

MANATEE COUNTY, FLORIDA

SWWRF RECLAIMED WATER AUTOMATION

PROCESS AND INSTRUMENTATION DIAGRAM
SHEET 2

DATE:	JULY 2010
MCE PROJ. #	1024-0128
DRAWN	EEB
DESIGNED	EEB
CHECKED	TER
PROJ. MGR.	MSL

SCALE
HORIZONTAL: NA
VERTICAL: NA

DRAWING NUMBER
I-4

STATUS: ISSUE FOR BID
REVISION

S:\1024\0128\90-Drawings\Instrumentation\I-4-1024128.dwg, 7/9/2010 11:38:29 AM, Quint Sketton

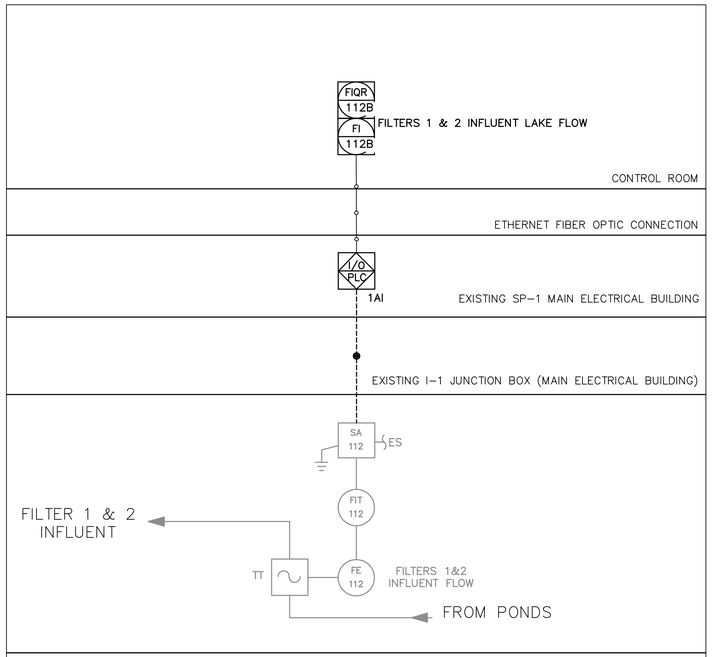

FILTERS 1&2 FLOW FROM PONDS FLOWMETER - LOOP NO. FLW-112

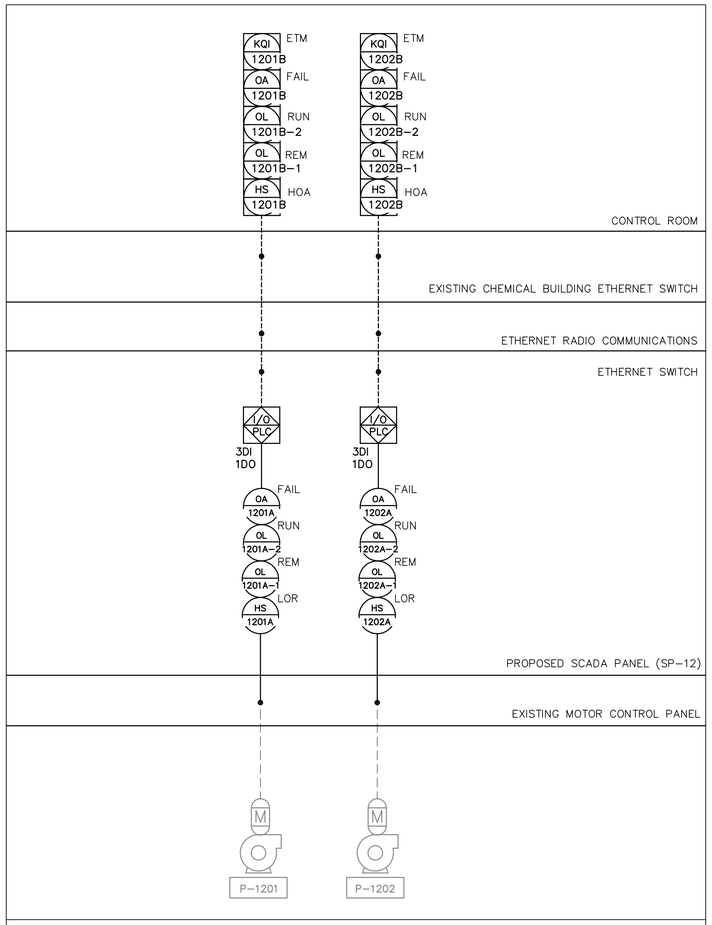

NORTH POND PUMP CONTROLS (SP-12)

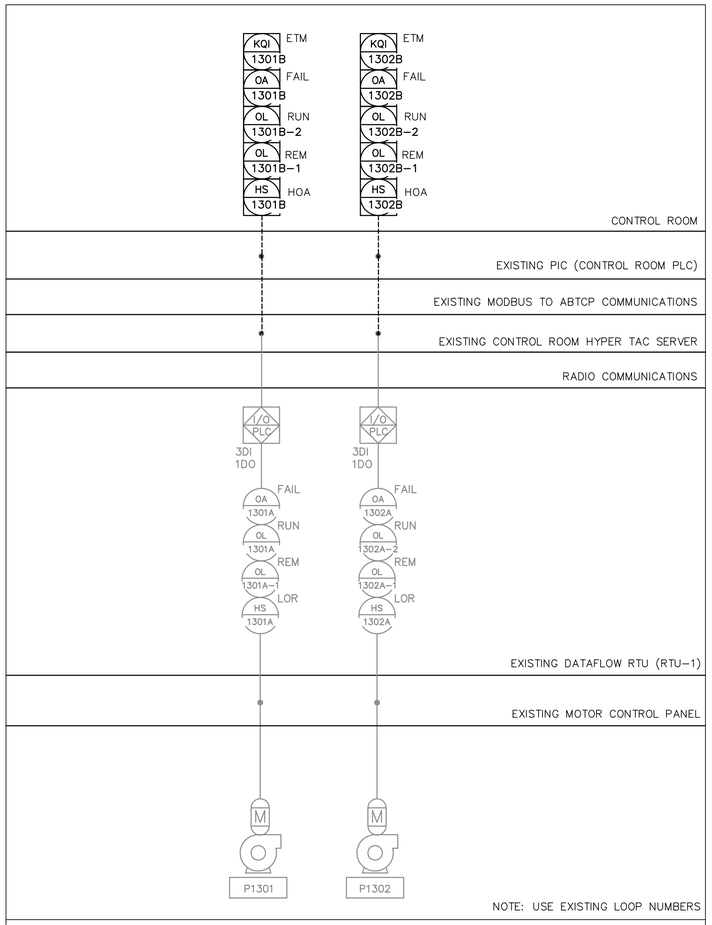

MIDDLE POND PUMP CONTROLS EXISTING DATAFLOW RTU

REV.NO.	DESCRIPTIONS	DATE
	REVISIONS	

SEAL

THOMAS E. ROBINSON JR.
P.E. No. 62976

SEAL

McKIM&CREED
1365 Hamlet Avenue
Clearwater, Florida 33756
Phone: (727)442-7196, Fax: (727)461-3827
EB0006691
www.mckimcreed.com

MANATEE COUNTY, FLORIDA

SWWRF RECLAIMED WATER AUTOMATION

PROCESS AND INSTRUMENTATION DIAGRAM
SHEET 3

DATE:	JULY 2010
MCE PROJ. #	1024-0128
DRAWN	EEB
DESIGNED	EEB
CHECKED	TER
PROJ. MGR.	MSL

SCALE
HORIZONTAL: NA
VERTICAL: NA

DRAWING NUMBER
I-5

STATUS: ISSUE FOR BID
REVISION

S:\1024\0128\90-Drawings\Instrumentation\I-5-1024128.dwg, 7/9/2010 11:38:36 AM, Quint Sheton

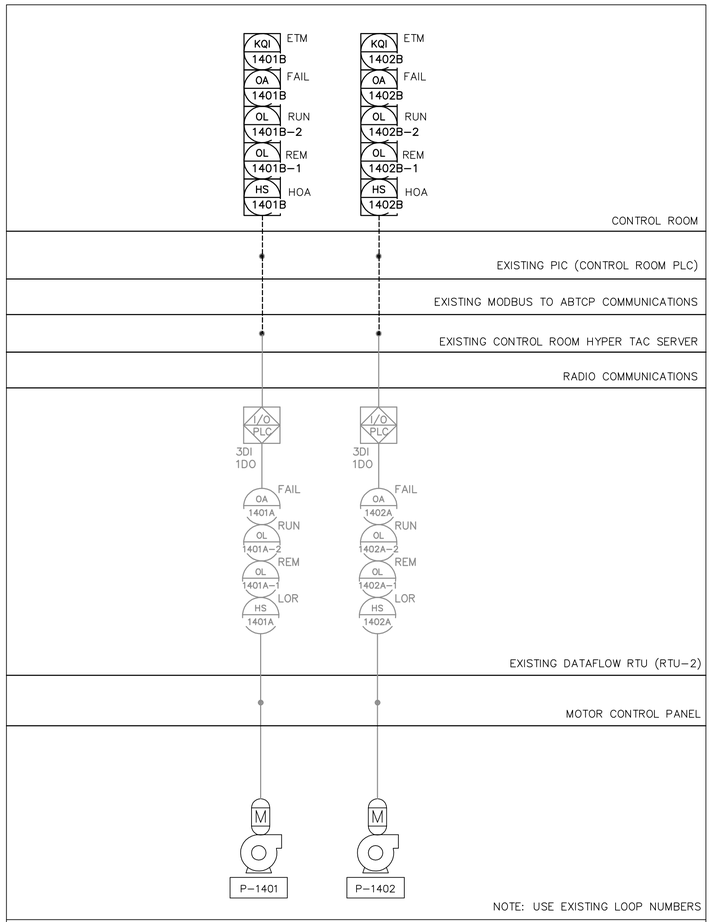

SOUTH POND PUMP CONTROLS EXISTING DATAFLOW RTU (TYPICAL x2)

REV.NO.	DESCRIPTIONS	DATE
	REVISIONS	

SEAL

THOMAS E. ROBINSON JR.
P.E. No. 62976

SEAL

McKIM & CREED
1365 Hamlet Avenue
Clearwater, Florida 33756
Phone: (727)442-7196, Fax: (727)461-3827
EB0006691
www.mckimcreed.com

MANATEE COUNTY, FLORIDA

SWWRF RECLAIMED WATER AUTOMATION

PROCESS AND INSTRUMENTATION DIAGRAM
SHEET 4

DATE:	JULY 2010
MCE PROJ. #	1024-0128
DRAWN	EEB
DESIGNED	EEB
CHECKED	TER
PROJ. MGR.	MSL

SCALE
HORIZONTAL: NA
VERTICAL: NA

DRAWING NUMBER
I-6

STATUS: ISSUE FOR BID
REVISION

S:\1024\0128\90-Drawings\Instrumentation\I-6-1024128.dwg, 7/9/2010 11:38:47 AM, Quint Skelton

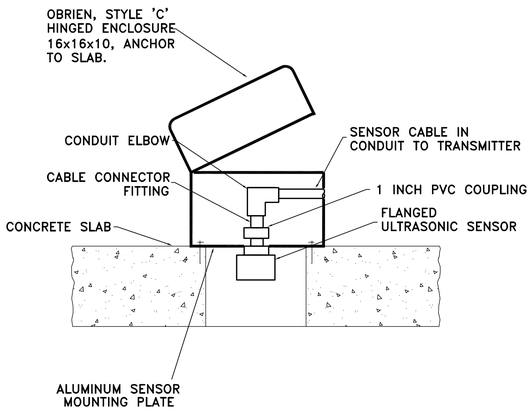

ULTRASONIC SENSOR MOUNTING
FOR ENCLOSED WETWELL DETAIL

NOTES:
1. SENSORS TO BE MOUNTED USING 'V' TYPE CONFIGURATION.
2. SENSOR SPACING PER MANUFACTURER INSTRUCTION.
3. UTILIZE SONIC COUPLING COMPOUND. COMPOUND TYPE SHALL BE SIL-GLYDE, DOW CORNING 111, GENERAL ELECTRIC RTV-108 OR APPROVED EQUAL.

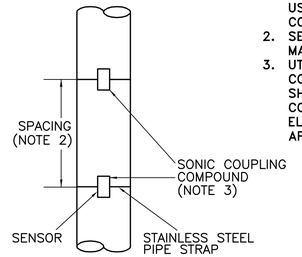

VERTICAL MOUNTING

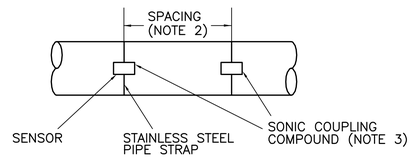

HORIZONTAL MOUNTING

TRANSIT TIME FLOW METER
SENSOR MOUNTING DETAIL

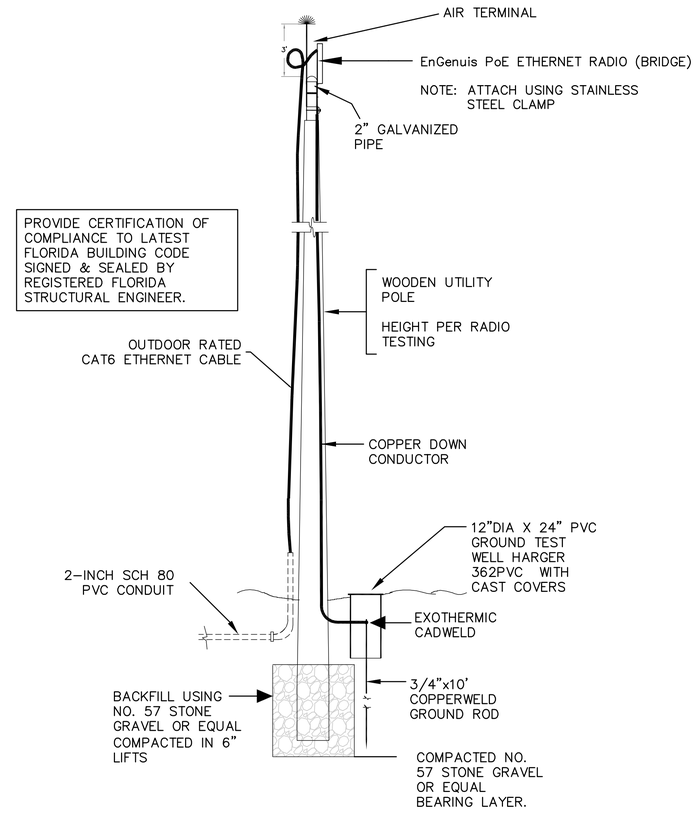

ANTENNA POLE INSTALLATION DETAIL
FOR NORTH POND (SP-11)

NOT TO SCALE

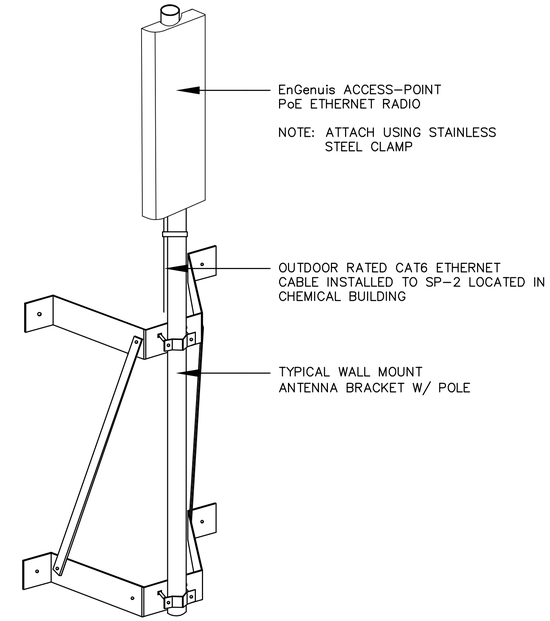

ACCESS-POINT RADIO BUILDING MOUNTING DETAIL

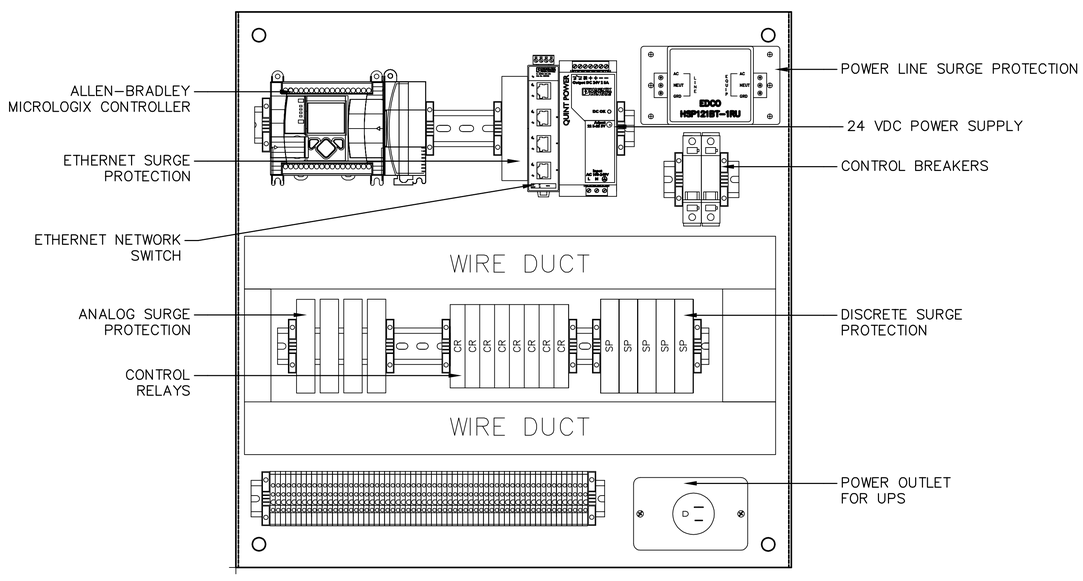

TYPICAL WIRELESS ETHERNET
WITH ALLEN-BRADLEY MICROLOGIX RTU PANEL (SP-11,12 & 13)

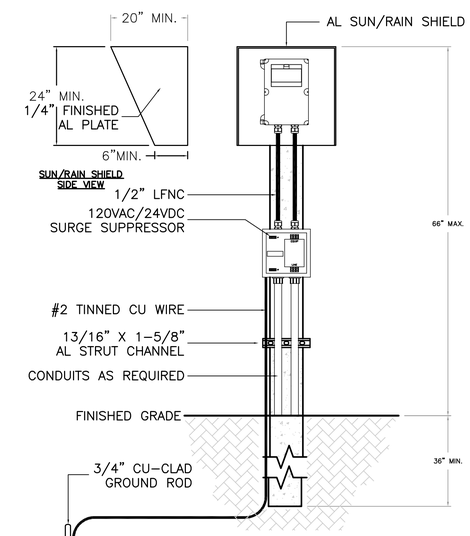

NOTES:
1. FILE AND ROUND ALL CORNERS SMOOTH, REAM ALL HOLES.
2. USE 316-SST FASTENERS, HARDWARE AND CONDUIT STRAPS.
3. FACE INSTRUMENT STAND NORTH WHEREVER POSSIBLE.
4. NYLON SPACERS SHALL BE USED ON ALL ALUMINUM MATERIALS IN CONTACT WITH CONCRETE OR COATED WITH BITUMASTIC PAINT.

INSTRUMENT STAND
CONCRETE POST DETAIL

REV.NO.	DESCRIPTIONS	DATE
	REVISIONS	

SEAL
THOMAS E. ROBINSON JR.
P.E. No. 62976

SEAL

McKIM&CREED
1365 Hamlet Avenue
Clearwater, Florida 33756
Phone: (727)442-7196, Fax: (727)461-3827
EB0006691
www.mckimcreed.com

MANATEE COUNTY, FLORIDA

SWWRF RECLAIMED WATER AUTOMATION

PROCESS AND INSTRUMENTATION DETAILS

DATE:	JULY 2010
MCE PROJ. #	1024-0128
DRAWN	EEB
DESIGNED	EEB
CHECKED	TER
PROJ. MGR.	MSL

SCALE
HORIZONTAL: NA
VERTICAL: NA

DRAWING NUMBER
I-7

STATUS: ISSUE FOR BID
REVISION

S:\1024\0128\Bb-Drawings\Instrumentation\I-7-1024128.dwg, 7/9/2010 4:15:37 PM, Quint Shelton

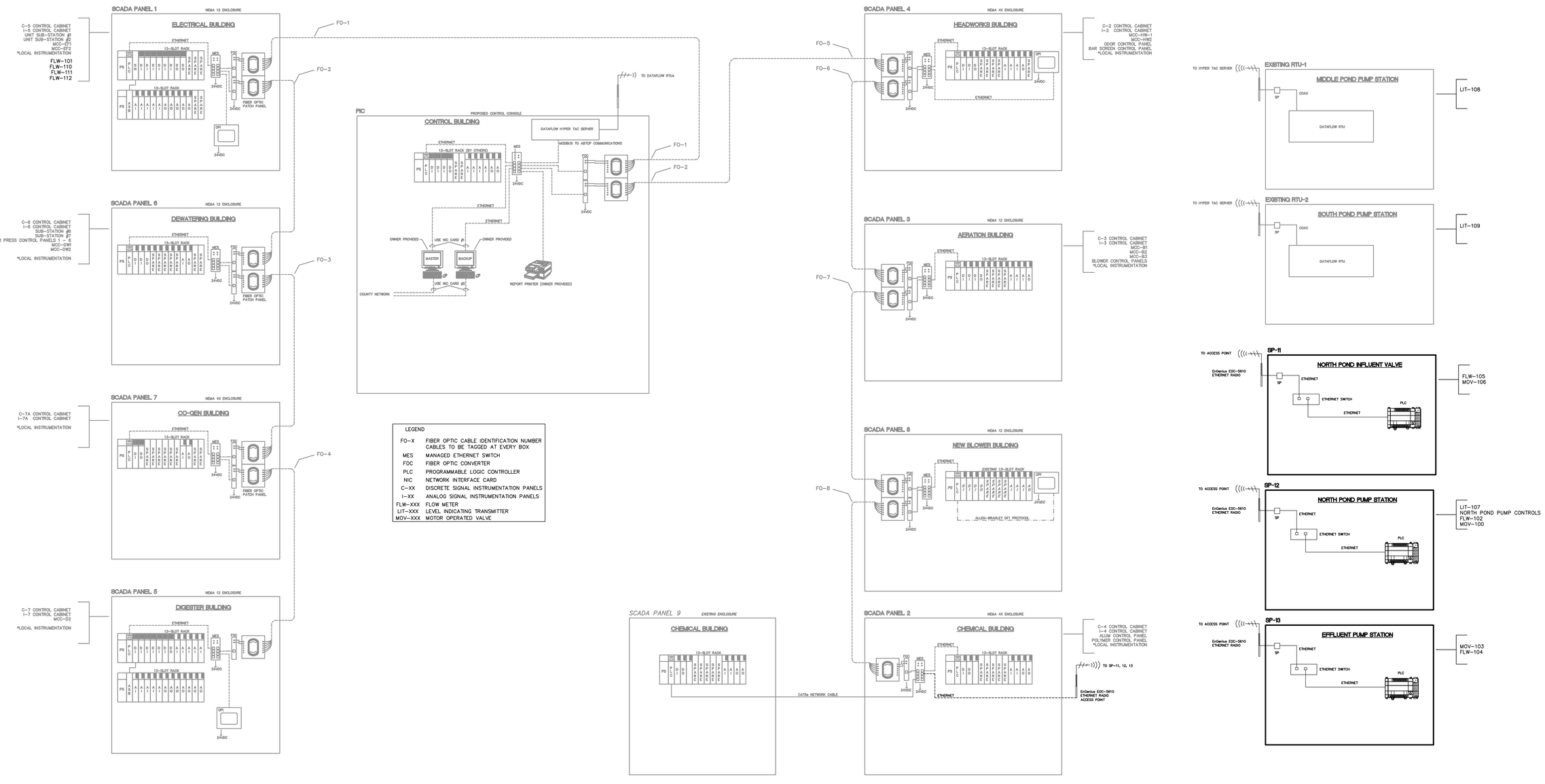

LEGEND	
FO-X	FIBER OPTIC CABLE IDENTIFICATION NUMBER CABLES TO BE TAGGED AT EVERY BOX
MES	MANAGED ETHERNET SWITCH
FOC	FIBER OPTIC CONVERTER
PLC	PROGRAMMABLE LOGIC CONTROLLER
NIC	NETWORK INTERFACE CARD
C-XX	DISCRETE SIGNAL INSTRUMENTATION PANELS
I-XX	ANALOG SIGNAL INSTRUMENTATION PANELS
FLW-XXX	FLOW METER
LIT-XXX	LEVEL INDICATING TRANSMITTER
MOV-XXX	MOTOR OPERATED VALVE

REV.NO.	DESCRIPTIONS	DATE
	REVISIONS	

SEAL

THOMAS E. ROBINSON JR.
P.E. No. 62976

SEAL

McKIM&CREED
1365 Hamlet Avenue
Clearwater, Florida 33756
Phone: (727)442-7196, Fax: (727)461-3827
EB0006691
www.mckimcreed.com

MANATEE COUNTY, FLORIDA

SWWRF RECLAIMED WATER AUTOMATION

COMMUNICATIONS SYSTEM OVERVIEW

DATE:	JULY 2010
MCE PROJ. #	1024-0128
DRAWN	EEB
DESIGNED	EEB
CHECKED	TER
PROJ. MGR.	MSL

SCALE
HORIZONTAL: NA
VERTICAL: NA

DRAWING NUMBER
I-8

STATUS: ISSUE FOR BID
REVISION

S:\1024\0128\90-Drawings\Instrumentation\I-8-10240128.dwg, 7/8/2010 9:00:00 AM, Quint Shelton

DEVICE SYMBOLS

- FS — FLOAT/FLOW SWITCH
- LS — LIMIT SWITCH
- PS — PRESSURE SWITCH
- T — THERMOSTAT
- PULL BOX, SIZE PER NEC
- JB — JUNCTION BOX, SIZE PER NEC
- E — ELECTRICAL EQUIPMENT CONNECTION
- GROUND ROD
- CONTROL STATION
- STOP–START STATION
- LOCK–OUT–STOP SWITCH
- R — RED STOPPED LIGHT
- FUSE
- MOTOR OL RELAY
- HEATER
- CLASS 1/DIVISION 1/II CONDUIT SEAL–OFF FITTING
- □ LOCATED AT FIELD DEVICE
- △ LOCATED AT MAIN CONTROL PANEL
- LOCATED AT LOCAL CONTROL PANEL
- ○ MOUNTED ON DOOR
- CIRCUIT BREAKER
- A — AMMETER
- AS — AMMETER SWITCH
- V — VOLTMETER
- VS — VOLTMETER SWITCH
- HP — MOTOR (HP=RATED HORSEPOWER)
- VACUUM STARTER
- 52 — ANSI/IEEE TYPE–52 AC POWER CIRCUIT BREAKER
- INDUSTRIAL BATTERY SET W/MOUNTING RACK
- PM — POWER MONITOR
- 27 — UNDER VOLTAGE
- 46 — PHASE UNBALANCE
- 48 — INCOMPLETE SEQUENCE
- 49 — OVER TEMPERATURE
- 51 — TIMED OVERCURRENT
- 51G — TIMED GROUND FAULT
- 74 — ALARM RELAY
- 81 — FREQUENCY
- 86 — LOCK OUT
- 87 — DIFFERENTIAL
- E110 — DUCTBANK CALLOUT
- 042000 — CONDUIT OR CABLE NUMBER

GENERAL ELECTRICAL SYMBOLS

- LP–3 — CONDUIT HOMERUN TO EQUIPMENT SHOWN. LINE TYPE DESIGNATES CONCEALED, EXPOSED, ETC. NUMBERS/TEXT DESIGNATE HOMERUN EQUIPMENT (I.E. PANEL BOARD CIRCUIT NUMBER).
- GENERAL CONDUIT RUN EXPOSED
- CONCEALED CONDUIT IN FLOOR SLAB, UNDERGROUND, ETC.
- EXISTING CABLE OR CONDUIT
- CONDUIT TURNED DOWN
- CONDUIT TURNED UP
- E — SITE ELECTRICAL
- E — EXISTING SITE ELECTRICAL
- T — SITE TELEPHONE
- T — EXISTING SITE TELEPHONE
- OHE — OVERHEAD ELECTRICAL UTILITY
- OHT — OVERHEAD TELEPHONE UTILITY
- UGE — UNDERGROUND ELECTRICAL UTILITY
- UGT — UNDERGROUND TELEPHONE UTILITY
- G — SITE GROUND
- G — EXISTING SITE GROUND
- ELECTRICAL INTERLOCK
- ELECTRICAL BUSS
- ELECTRICAL BUSS DUCT
- 0A 0F 3R — DISCONNECT SWITCH. TOP NUMBER DENOTES FUSE SIZE (NF=NON–FUSED). BOTTOM NUMBER DENOTES FRAME SIZE. RIGHT NUMBER DENOTES NEMA ENCLOSURE RATING.
- CB 0A 0F 3R — CIRCUIT BREAKER. TOP NUMBER DENOTES TRIP. BOTTOM NUMBER DENOTES FRAME SIZE. RIGHT NUMBER DENOTES NEMA ENCLOSURE RATING.
- 2 0A 0F 3R — COMBINATION MAGNETIC MOTOR STARTER AND DISCONNECT SWITCH OR MOTOR CIRCUIT PROTECTOR. LEFT NUMBER DENOTES NEMA STARTER SIZE. TOP NUMBER DENOTES FUSE SIZE OR MCP. BOTTOM NUMBER DENOTES FRAME SIZE. RIGHT NUMBER DENOTES NEMA ENCLOSURE.
- 3 FVNR — FULL VOLTAGE NON–REVERSING MOTOR STARTER. LEFT NUMBER DENOTES NEMA STARTER SIZE.
- RVSS — REDUCED VOLTAGE SOLID–STATE MOTOR STARTER.
- VFD — VARIABLE FREQUENCY MOTOR CONTROLLER.
- $ — LIGHTING CONTROL SWITCH: {LOWERCASE LETTER} – CONTROL SWITCHING
  - M – MOTOR RATED SWITCH
  - D – DIMMER CONTROL
  - OS – OCCUPANCY SENSOR
  - 3 – THREE–WAY SWITCHING
  - 4 – FOUR–WAY SWITCHING

OUTLETS: NUMBER DENOTES PANEL BOARD CIRCUIT FOR POWER OUTLETS. IF SHOWN, LOWERCASE LETTER DENOTES CONTROL SWITCHING FOR POWER OUTLETS.

- SIMPLEX RECEPTACLE.
- DUPLEX RECEPTACLE.
- QUADRAPLEX RECEPTACLE.
- VOICE (PHONE) OUTLET.
- DATA OUTLET.
- VOICE/DATA COMBINATION OUTLET.

LIGHTING SYMBOLS

- PP–C/1 B1:a — LIGHT FIXTURES (VARIOUS TYPES) – UPPERCASE LETTER DENOTES FIXTURE TYPE, REFER TO LIGHTING SCHEDULE OR NOTES. NUMBER DENOTES LIGHTING PANEL CIRCUIT. LOWERCASE LETTER DENOTES CONTROL SWITCH.
- PP–C/3 E2 — EMERGENCY LIGHT – BATTERY EQUIPPED, CIRCUIT AHEAD OF CONTROL SWITCHES. ADDITIONAL FIXTURE HEADS MAY BE SHOWN CONNECTED TO UNIT.
- PP–C/1 E3 — EMERGENCY EXIT LIGHT – BATTERY EQUIPPED.
- PC — PHOTOELECTRIC CONTROL DEVICE
- LC — LIGHTING CONTACTOR

TYPICAL ABBREVIATIONS

A, AMP	AMPERE
AFD	ADJUSTABLE FREQUENCY DRIVE
AFG	ABOVE FINISHED GRADE
AIT	ANALYTICAL INDICATION TRANSMITTER
AHU	AIR HANDLING UNIT
AIC	AMPERE INTERRUPTING CAPACITY
AL	ALUMINUM
ATS	AUTOMATIC TRANSFER SWITCH
BKR	BREAKER
C	CONDUIT
CAB	CABINET
CAT	CATALOG
CL	CHLORINE
CB	CIRCUIT BREAKER
CCTV	CLOSED CIRCUIT TELEVISION
CKT	CIRCUIT
CLG	CEILING
CP	CONTROL PANEL
CR	CONTROL RELAY, CORROSION RESISTANT
CS	CONTROL SWITCH
CV	CONTROL VALVE
CT	CURRENT TRANSFORMER
CU	COPPER
EF	EXHAUST FAN
EMER	EMERGENCY
EMT	ELECTRICAL METALLIC TUBING
ENCL	ENCLOSURE
EQUIP	EQUIPMENT
EWC	ELECTRIC WATER COOLER
EWH	ELECTRIC WATER HEATER
EPRF	EXPLOSION PROOF
FA	FIRE ALARM
FAAP	FIRE ALARM ANNUNCIATOR PANEL
FACP	FIRE ALARM CONTROL PANEL
FBO	FURNISHED BY OTHERS
FLA	FULL LOAD AMPS
FVNR	FULL VOLTAGE NON–REVERSING STARTER
FLOUR	FLUORESCENT
FLR	FLOOR
FMC	FLEXIBLE METAL CONDUIT
FWE	FURNISHED WITH EQUIPMENT
GEN	GENERATOR
G, GND	GROUND
GFIC	GROUND FAULT CIRCUIT INTERRUPTER
HH	HANDHOLE
HID	HIGH INTENSITY DISCHARGE
HOA	HAND–OFF–AUTO
HP	HORSE POWER
HPF	HIGH POWER FACTOR
HPS	HIGH PRESSURE SODIUM
HTR	HEATER
HV	HIGH VOLTAGE
Hz	HERTZ
IMC	INTERMEDIATE METALLIC CONDUIT (GALVANIZED)
INCAND	INCANDESCENT
JB	JUNCTION BOX
k	THOUSAND
kCMIL	THOUSAND CIRCULAR MILLS
kA	KILOVOLT AMPERE
kW	KILOWATTS
kWH	KILOWATT–HOURS
LFMC	LIQUIDTIGHT FLEXIBLE METAL CONDUIT
LFNC	LIQUIDTIGHT FLEXIBLE NONMETALLIC CONDUIT
LIT	LEVEL INDICATION TRANSMITTER
LP	LIGHTING PANEL, LIGHT POLE
LTG	LIGHTING
MCB	MAIN CIRCUIT BREAKER
MCC	MOTOR CONTROL CENTER
MCP	MOTOR CIRCUIT PROTECTOR
MDP	MAIN DISTRIBUTION PANEL
MFR	MANUFACTURER
MH	MANHOLE
MLO	MAIN LUGS ONLY
MSB	MAIN SWITCHBOARD
MTD	MOUNTED/MOUNTING
MTS	MANUAL TRANSFER SWITCH
MV	MEDIUM VOLTAGE
NEC	NATIONAL ELECTRIC CODE
N, NEU	NEUTRAL
NA	NOT APPLICABLE
NC	NORMALLY CLOSE
NO	NORMALLY OPEN
NIC	NOT IN CONTRACT
NTS	NOT TO SCALE
P	POLE
PA	PUBLIC ADDRESS
PB	PULL BOX, PUSH–BUTTON
PCP	PUMP CONTROL PANEL
PF	POWER FACTOR
ϕ, PH	PHASE
PIT	PRESSURE INDICATION TRANSMITTER
PLC	PROGRAMMABLE LOGIC CONTROLLER
PNL	PANEL
PP	POWER PANEL, POWER POLE
PT	POTENTIAL TRANSFORMER
PWR	POWER
RECEP	RECEPTACLE
RVSS	REDUCED VOLTAGE SOFT STARTER
REQ	REQUIRED
RM	ROOM
RMC	RIGID METAL CONDUIT (GALVANIZED)
RTU	REMOTE TELEMETRY UNIT
SCR	DC MOTOR DRIVE
SH	SHEET
SPEC	SPECIFICATION
SS	SELECTOR SWITCH
SST.	STAINLESS STEEL
STP	SHIELDED TWISTED PAIR
SW	SWITCH
SWBD	SWITCHBOARD
SWGR	SWITCH GEAR
TEL	TELEPHONE
TVSS	TRANSIENT VOLTAGE SURGE SUPPRESSER
TYP	TYPICAL
UG	UNDERGROUND
UH	UNIT HEATER
UON	UNLESS OTHERWISE NOTED
UTIL	UTILITY
UTP	UNSHIELDED TWISTED PAIR
V	VOLTS
VFD	VARIABLE FREQUENCY DRIVE
W	WIRE, WATT
WH	WATT–HOUR
WP	WEATHERPROOF
XFMR	TRANSFORMER

GENERAL NOTES

1. REFERENCE ALL SPECIFICATIONS AND CONTRACT DRAWINGS FOR ADDITIONAL REQUIREMENTS AND CONTRACT RESPONSIBILITIES PRIOR TO COMMENCING WORK.
2. THE GENERAL NOTES STATED ON THIS DRAWING ARE APPLICABLE TO ALL ELECTRICAL WORK UNLESS NOTED OTHERWISE.
3. ALL ELECTRICAL WORK SHALL COMPLY WITH THE CURRENT NEC, NESC AND LOCAL CODES INCLUDING OWNERS STANDARDS AND REQUIREMENTS.
4. THE ELECTRICAL INSTALLATION SHALL COMPLY THE REQUIREMENTS OF NECA–1 2006: (STANDARD PRACTICES FOR GOOD WORKMANSHIP IN ELECTRICAL CONSTRUCTION).
5. THE SCHEDULING AND DURATION OF ANY SHUTDOWN OF ANY PLANT PROCESS FOR THE REMOVAL OF EXISTING EQUIPMENT OR INSTALLATION OF NEW EQUIPMENT SHALL BE COORDINATED IN ADVANCE WITH THE OWNER.
6. ALL SYMBOLS AND ABBREVIATION MAY NOT BE UTILIZED FOR THIS PROJECT.
7. ADDITIONAL SYMBOLS NOT SHOWN ON THIS DRAWING MAY BE SHOWN ELSEWHERE ON THE ELECTRICAL DRAWINGS.
8. ELECTRICAL DRAWINGS SHOW MAJOR CABLE AND CONDUIT REQUIREMENTS. REFERENCE EQUIPMENT SPECIFICATIONS FOR ADDITIONAL REQUIREMENTS.
9. ALL 480V ELECTRICAL EQUIPMENT SHALL HAVE A MINIMUM RATING OF 22K AIC.
10. ALL ELECTRICAL EQUIPMENT SHALL BE INSTALLED SO THAT ALL CODE–REQUIRED AND MANUFACTURER–RECOMMENDED SERVICING CLEARANCES ARE MAINTAINED. INSTALLATIONS SHALL COMPLY WITH NEC 110–26 FOR CLEARANCE REQUIREMENTS.
11. ALL POWER AND CONTROL WIRING OR CABLES SHALL BE 600V RATED XHHW–2 STRANDED COPPER, UNLESS OTHERWISE NOTED ON DRAWINGS.
12. ALL AMPACITIES ARE BASED ON 75°C RATING. THE CONTRACTOR IS RESPONSIBLE FOR THE INCREASING OF CONDUCTOR SIZES AS NECESSARY TO MEET THE REQUIREMENTS OF NEC 110–14(C) WHERE TERMINATIONS ARE NOT LISTED AND LABELED FOR USE AT 75°C. THIS REQUIREMENT APPLIES TO TERMINATIONS IN BOTH NEW EQUIPMENT AND IN EXISTING EQUIPMENT TO WHICH TERMINATIONS ARE MADE AS PART OF THIS PROJECT.
13. NO SPLICES OR JUNCTIONS TO FEEDER CABLES SHALL BE MADE WITHOUT ENGINEERS APPROVAL.
14. ALL EXPOSED CONDUIT SHALL BE RIGID ALUMINUM.
15. ALL CONDUIT INSTALLED BELOW GRADE SHALL BE NON–REINFORCED CONCRETE DUCTBANK; REFERENCE DETAIL SHEETS.
16. ALL DUCTBANKS CROSSING ROADWAYS SHALL BE REINFORCED CONCRETE AND EXTEND 5–FEET FROM EDGE OF PAVEMENT. DUCTBANKS SHALL CROSS PROCESS PIPING AT 90° ANGLE WHERE POSSIBLE. REFERENCE DETAIL SHEETS.
17. ALL CONDUIT TRANSITIONS THROUGH FINISHED GRADE OR CONCRETE SHALL BE ALUMINUM WITH HEAVY WALL HEAT–SHRINKABLE TUBING 6" MIN. ABOVE AND BELOW TRANSITION.
18. ROUGH–IN CONDUIT AS REQUIRED FOR DIRECT CONNECTION TO EQUIPMENT AS SHOWN. PROVIDE FLEXIBLE CONNECTIONS TO ALL EQUIPMENT AND MAKE ALL CONNECTIONS COMPLETE AND IN ACCORDANCE WITH THE SPECIFICATIONS.
19. ALL CONDUIT SHALL RUN CONCEALED UNLESS OTHERWISE NOTED OR SHOWN. THE CONDUITS SHALL RUN PARALLEL TO LANDSCAPE AND STRUCTURAL FEATURES, AND THE BENDS AND TURNS SHALL BE MADE BY MEANS OF CONDUIT FITTINGS. MOST CONDUIT LAYOUTS ARE NOT AS SHOWN ON THE PLANS. THE CONTRACTOR SHALL PROPOSE LOGICAL GROUPINGS, MARSHALLING AND ROUTING OF CONDUITS AND WIRING FOR APPROVAL BY ENGINEER PRIOR TO INSTALLATION.
20. THE CONTRACTOR SHALL PROVIDE ALL REQUIRED PULL BOXES, TERMINAL BOXES AND JUNCTION BOXES FOR INSTALLATION OF THE WIRING IN ACCORDANCE WITH THE CONTRACT SPECIFICATIONS THOUGH THE BOXES MAY NOT BE INDICATED ON THE DRAWINGS.
21. CONDUIT AND WIRING FOR LIGHTING, RECEPTACLES AND OTHER SINGLE PHASE POWERED DEVICES ARE GENERALLY NOT SHOWN BUT SHALL BE PROVIDED AS REQUIRED FOR PROPER SERVICE. MULTI–PHASE CIRCUITS SHALL BE PROVIDED WITH DEDICATED NEUTRAL CONDUCTORS.
22. ALL SPARE CONDUITS SHALL BE CAPPED OR PLUGGED AND SHALL INCLUDE 200# TEST POLYPROPYLENE PULL STRING.
23. STRUT–CHANNEL SHALL NOT BE BENT, DRILLED, CUT OR OTHERWISE MODIFIED TO PRODUCE FITTINGS, BRACES OR BRACKETS FOR CONDUIT AND EQUIPMENT SUPPORTS.
24. MANUFACTURED STRUT–CHANNEL BRACES, BRACKETS, FITTINGS OR POST BASES SHALL BE PROVIDED AND INSTALLED WITH ASSOCIATED HARDWARE AND FASTENERS FOR CONDUIT AND EQUIPMENT SUPPORTS.
25. CONTRACTOR SHALL PROVIDE AUXILIARY SUPPORTS FOR SWITCHBOARDS, PANELBOARDS, TRANSFORMERS, CONTROL PANELS, ETC., AS REQUIRED.
26. CONTRACTOR SHALL PROVIDE AND INSTALL CONCRETE EMBEDDED LEVELING CHANNEL SUPPORTS FOR FLOOR MOUNTED EQUIPMENT.
27. STRUCTURAL MEMBERS SHALL NOT BE DRILLED, CUT, WELDED OR OTHERWISE MODIFIED WITHOUT PRIOR APPROVAL OF THE ENGINEER OF RECORD.
28. ALL NEW EQUIPMENT SHALL FIT INTO EXISTING AVAILABLE SPACE. IT IS THE RESPONSIBILITY OF THE CONTRACTOR TO PROVIDE EQUIPMENT WHICH MEETS THE SPACE REQUIREMENTS.
29. THE WIRING DIAGRAMS, QUANTITY AND SIZE OF WIRES AND CONDUITS ARE BASED UPON SELECTED STANDARD COMPONENTS OF ELECTRICAL EQUIPMENT. MODIFICATIONS APPROVED BY THE ENGINEER MAY BE MADE BY THE CONTRACTOR AT HIS EXPENSE TO ACCOMMODATE EQUIPMENT ACTUALLY PURCHASED.
30. THE CONTRACTOR SHALL PROVIDE ALL NECESSARY COMPONENTS REQUIRED FOR MAKING FINAL CONNECTION OF ALL EQUIPMENT INSTALLED OR MODIFIED AS PART OF THIS CONTRACT.
31. NOT ALL MOISTURE AND HAZARDOUS AREA CONDUIT SEALS ARE SHOWN ON THE DRAWINGS. IT IS THE CONTRACTOR'S RESPONSIBILITY TO CONFIRM WITH THE CODE, SPECIFICATION, AND DRAWING REQUIREMENTS FOR THEIR LOCATION.
32. CONTRACTOR SHALL PROVIDE BLACK TEXT ON WHITE HEAT–SHRINKABLE CABLE/WIRE IDENTIFICATION LABEL AT BOTH ENDS OF POWER, CONTROL AND DATA WIRING.
33. GROUND FAULT CURRENT INTERRUPTING (GFCI) RECEPTACLES:
    A. SHALL BE RATED FOR 20A AT 120V WITH LED POWER INDICATOR
    B. INSTALLED IN INTERIOR SPACES WHERE EXPOSED TO WATER SOURCES SUCH AS TOILET ROOMS, SHOWER AREAS, KITCHENS, ETC., INDIVIDUAL GFCI RECEPTACLES SHALL BE PROVIDED.
    C. INSTALLED OUTDOORS OR IN PROCESS AREAS, ALL RECEPTACLES SHALL BE WEATHER PROOF, CORROSION RESISTANT, AND SHALL BE INDIVIDUAL GFCI DEVICES.

TYPICAL DEVICE MOUNTING HEIGHTS

RECEPTACLES (INTERIOR PROCESS AREAS)	16" AFF
RECEPTACLES (EXTERIOR PROCESS AREAS)	48" AFF
LIGHT SWITCHES	48" AFF
PHONE OUTLETS	16" AFF
PHONE OUTLETS (WALL MOUNT)	64" AFF
DATA OUTLETS	16" AFF
FIRE ALARM PULL STATION	48" AFF
FIRE ALARM AUDIO/VISUAL ALARM	80" AFF
FIRE ALARM VISUAL ALARM ONLY	80" AFF
EXIT LIGHTS (WALL MOUNT)	16" ABOVE DOOR
EMERGENCY LIGHTS (WALL MOUNT)	96" AFF

NOTE: DIMENSIONS ARE TO DEVICE TOP UNLESS NOTED OTHERWISE.

REV.NO.	DESCRIPTIONS	DATE
	REVISIONS	

SEAL

ARTHUR L. ANCHORS, P.E.
PROFESSIONAL ENGINEER NO. 39804
STATE OF FLORIDA

SEAL

McKIM&CREED
1365 Hamlet Avenue
Clearwater, Florida 33756
Phone: (727)442–7196, Fax: (727)461–3827
EB0006691
www.mckimcreed.com

MANATEE COUNTY, FLORIDA

SWWRF RECLAIMED WATER AUTOMATION

ELECTRICAL GENERAL NOTES, LEGENDS AND ABBREVIATIONS

DATE:	JULY 2010
MCE PROJ. #	1024–0128
DRAWN	BMW
DESIGNED	BMW
CHECKED	ALA
PROJ. MGR.	MSL

SCALE
HORIZONTAL: NA
VERTICAL: NA

DRAWING NUMBER
E-1

STATUS: ISSUE FOR BID
REVISION

S:\1024\01280\90–Drawings\ELECTRICAL\E01_J01024_01280.dwg 7/8/2010 10:46:43 AM, Brad Wynne

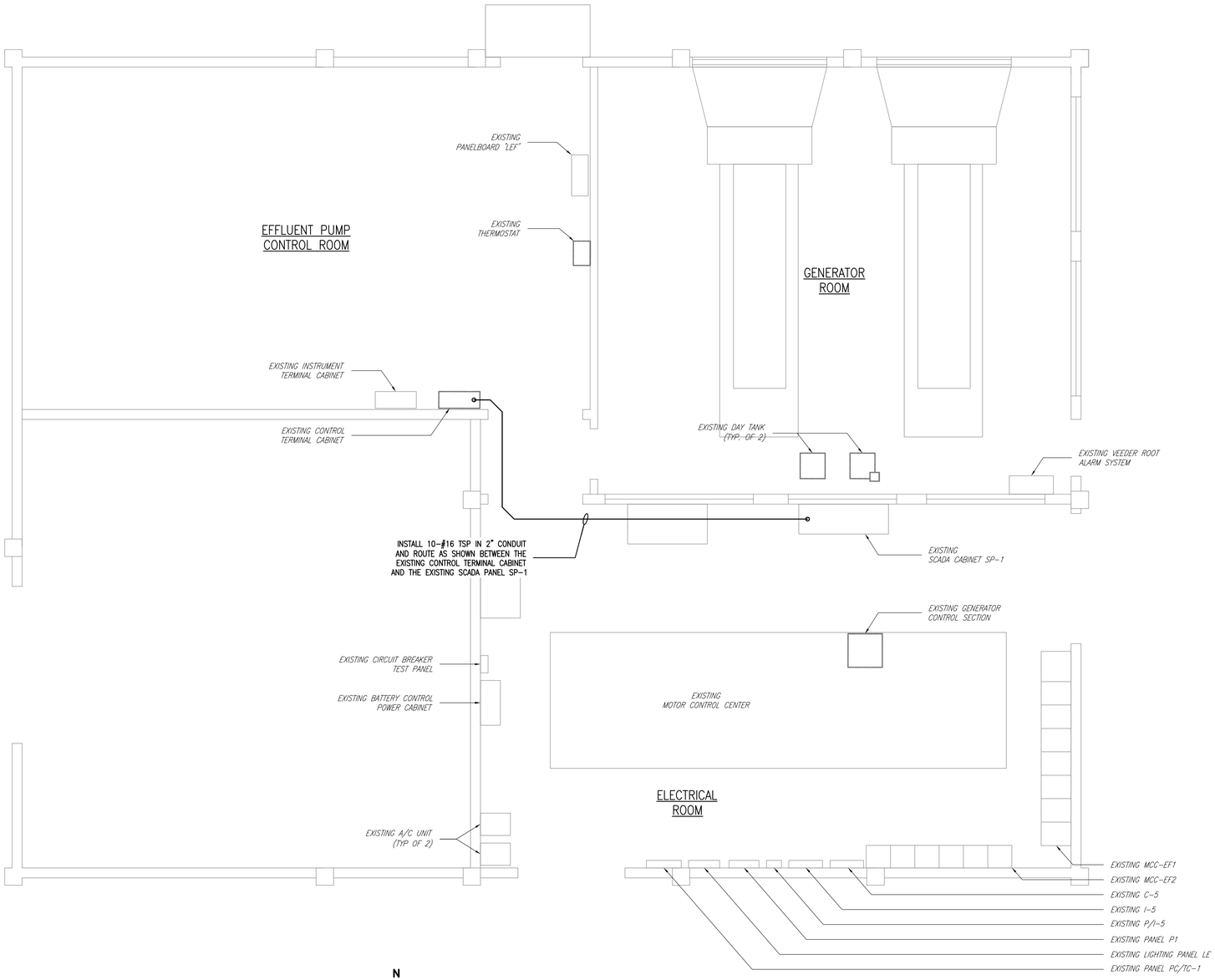

ELECTRICAL BUILDING FLOOR PLAN
SCALE: 1/4" = 1'

S:\1024\0128\60-Drawings\ELECTRICAL\E202_01024_0128.dwg, 7/8/2010 10:48:48 AM, Brad Wynne

REV.NO.	DESCRIPTIONS	DATE

REVISIONS

SEAL

ARTHUR L. ANCHORS, P.E.
PROFESSIONAL ENGINEER NO. 39804
STATE OF FLORIDA

SEAL

McKIM&CREED
1365 Hamlet Avenue
Clearwater, Florida 33756
Phone: (727)442-7196, Fax: (727)461-3827
EB0006691
www.mckimcreed.com

MANATEE COUNTY, FLORIDA

SWWRF RECLAIMED WATER AUTOMATION

ELECTRICAL BUILDING
PANLE SP-1 MODIFICATIONS

DATE:	JULY 2010
MCE PROJ. #	1024-0128
DRAWN	BMW
DESIGNED	BMW
CHECKED	ALA
PROJ. MGR.	MSL

SCALE
HORIZONTAL: 1/4" = 1'
VERTICAL: NA

DRAWING NUMBER
E-2

STATUS: ISSUE FOR BID
REVISION

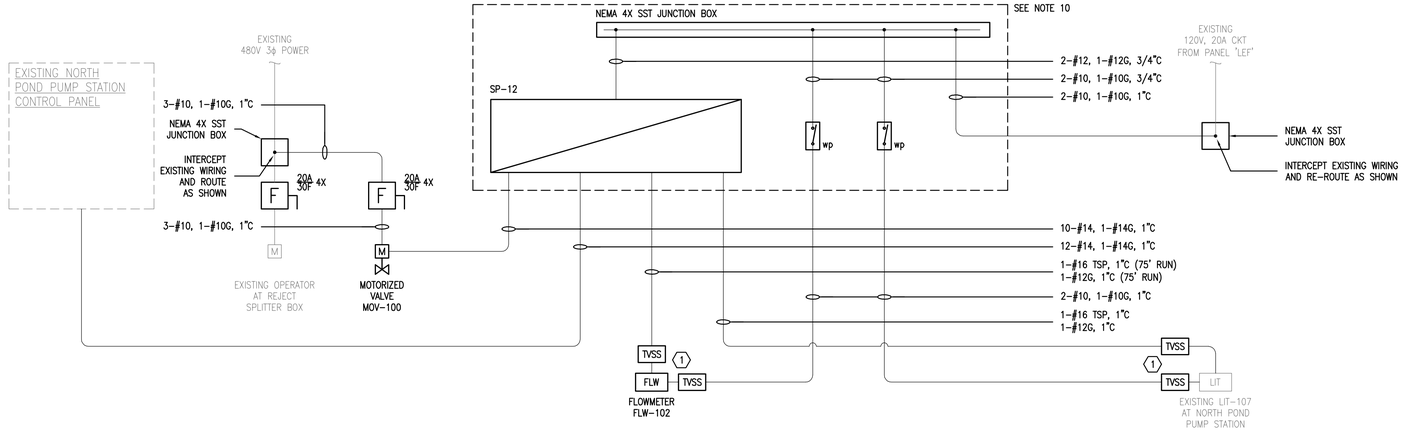

MOV-100, FLW-102
NORTH POND PUMP STATION
RISER DIAGRAM

N.T.S.

NOTES:

1. ALL ELECTRICAL WORK SHALL COMPLY WITH THE CURRENT NEC, NESC AND LOCAL CODES INCLUDING OWNERS STANDARDS AND REQUIREMENTS.
2. ALL ELECTRICAL EQUIPMENT SHALL BE INSTALLED SO THAT ALL CODE-REQUIRED AND MANUFACTURER-RECOMMENDED SERVICING CLEARANCES ARE MAINTAINED. INSTALLATIONS SHALL COMPLY WITH NEC 110-26 FOR CLEARANCE REQUIREMENTS.
3. ALL POWER AND CONTROL CABLING SHALL BE 600V RATED THHN/THWN STRANDED COPPER.
4. ALL EXPOSED CONDUIT SHALL BE RIGID ALUMINUM. ALL CONDUIT INSTALLED BELOW GRADE SHALL BE CONCRETE ENCASED SCH. 40 PVC.
5. REFER TO DRAWING G-3 FOR LOCATIONS OF EQUIPMENT RACKS, VALVES, LEVEL TRANSMITTERS, AND FLOW TRANSMITTERS.
6. TRANSMITTER POWER ON-OFF SWITCH SHALL BE WEATHERPROOF.
7. PROVIDE EQUIPMENT RACK FOR NEW SP-12 PANEL ADJACENT TO THE NORTH POND PUMP STATION CONTROL PANEL.
8. PROVIDE DISCONNECTS AND STANDS FOR AL MOTORIZED VALVES SUPPLIED OR RELOCATED AS A PART OF THIS CONTRACT.
9. PROVIDE MOUNTING STANDS FOR ALL NEW LEVEL AND FLOW TRANSMITTERS PROVIDED AS A PART OF THIS CONTRACT.
10. PROVIDE EQUIPMENT RACK, HARDWARE, ETC. AS REQUIRED FOR THE FOLLOWING EQUIPMENT AT A MINIMUM:
    A. NEMA 4X JUNCTION BOX
    B. SP-12
    C. WEATHERPROOF SWITCHES
11. PROVIDE EQUIPMENT RACK, HARDWARE, ETC. AS REQUIRED FOR THE FOLLOWING EQUIPMENT AT A MINIMUM:
    A. NEMA 4X JUNCTION BOX
    B. SP-13
    C. WEATHERPROOF SWITCH

KEYNOTES:

(1) PROVIDE CONDUIT/WIRE AS REQUIRED TO CONNECT INSTRUMENT TVSS DEVICES WHERE SHOWN. REFER TO SPECIFICATIONS FOR ADDITIONAL REQUIREMENTS.

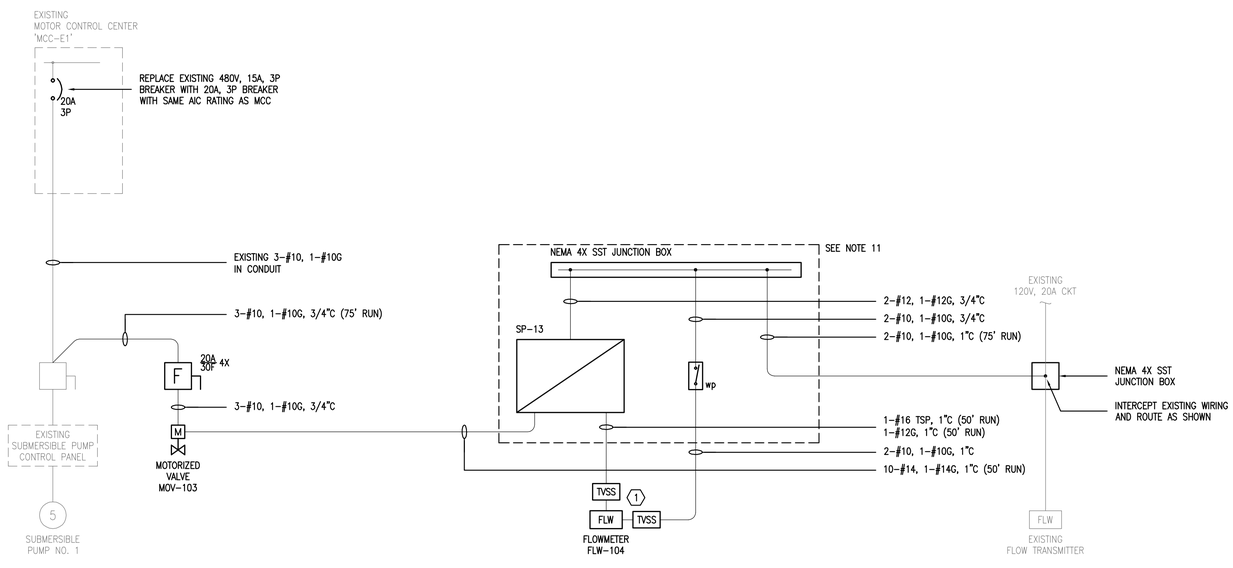

MOV-103, FLW-104
EFFLUENT PUMP STATION IRRIGATION METER
RISER DIAGRAM

N.T.S.

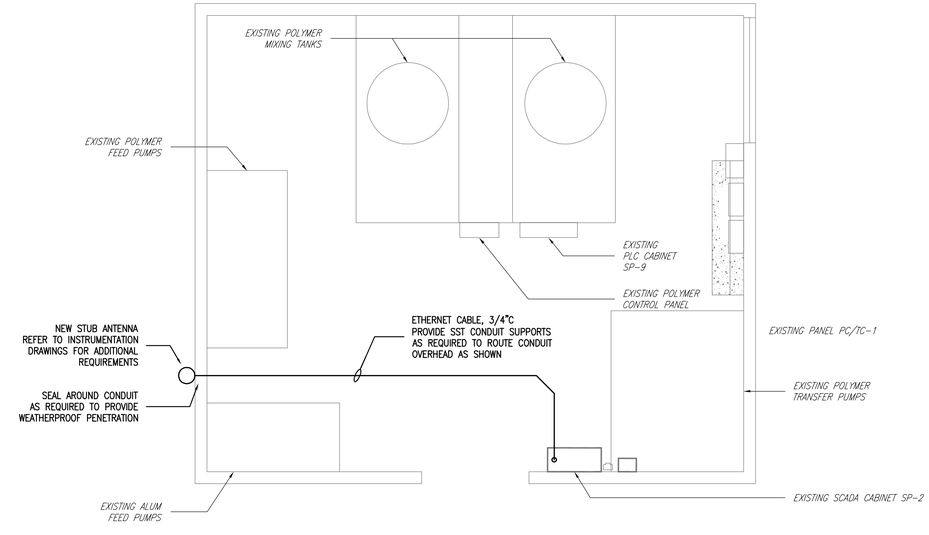

CHEMICAL FEED BUILDING
CONDUIT ROUTING DETAIL

SCALE: 1/4" = 1'

REV.NO.	DESCRIPTIONS	DATE

REVISIONS

SEAL

ARTHUR L. ANCHORS, P.E.
PROFESSIONAL ENGINEER NO. 39804
STATE OF FLORIDA

SEAL

McKIM&CREED
1365 Hamlet Avenue
Clearwater, Florida 33756
Phone: (727)442-7196, Fax: (727)461-3827
EB0006691
www.mckimcreed.com

MANATEE COUNTY, FLORIDA

MANATEE COUNTY, FLORIDA

SWWRF RECLAIMED WATER AUTOMATION

MAIN ELECTRICAL BUILDING
SINGLE LINE DIAGRAM

DATE:	JULY 2010
MCE PROJ. #	1024-0128
DRAWN	BMW
DESIGNED	BMW
CHECKED	ALA
PROJ. MGR.	MSL

SCALE
HORIZONTAL: NA
VERTICAL: NA

DRAWING NUMBER
E-3

STATUS: ISSUE FOR BID
REVISION

S:\1024\0128\90-Drawings\ELECTRICAL\E03_01024_0128.dwg, 7/8/2010 10:48:49 AM, Brad Wynne

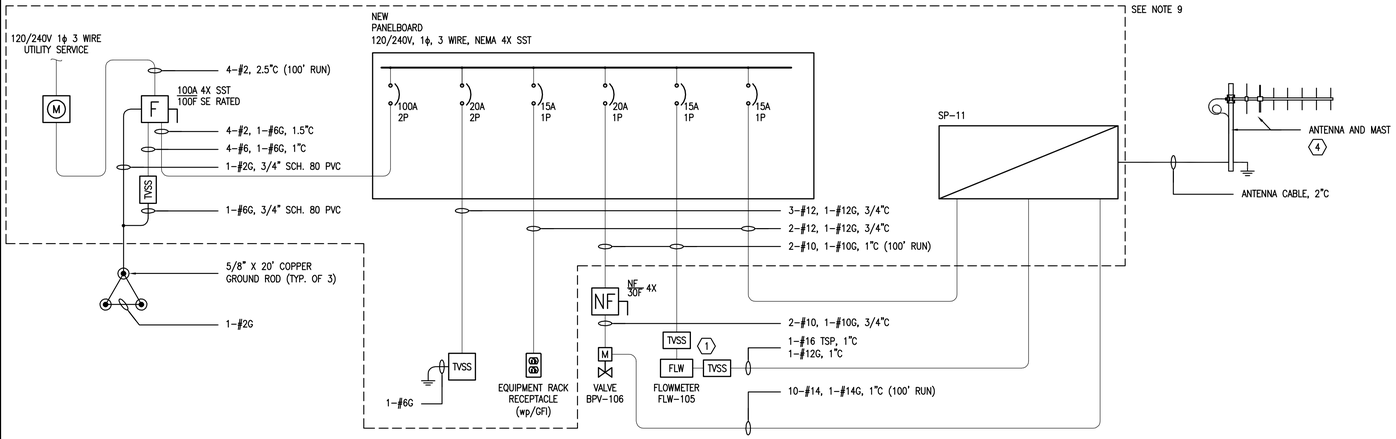

BPV-106, FLW-105
NORTH POND INFLUENT VALVE AND FLOWMETER RISER DIAGRAM

N.T.S.

NOTES:

1. ALL ELECTRICAL WORK SHALL COMPLY WITH THE CURRENT NEC, NESC AND LOCAL CODES INCLUDING OWNERS STANDARDS AND REQUIREMENTS.
2. ALL ELECTRICAL EQUIPMENT SHALL BE INSTALLED SO THAT ALL CODE-REQUIRED AND MANUFACTURER-RECOMMENDED SERVICING CLEARANCES ARE MAINTAINED. INSTALLATIONS SHALL COMPLY WITH NEC 110-26 FOR CLEARANCE REQUIREMENTS.
3. ALL POWER AND CONTROL CABLING SHALL BE 600V RATED THHN/THWN STRANDED COPPER.
4. ALL EXPOSED CONDUIT SHALL BE RIGID ALUMINUM. ALL CONDUIT INSTALLED BELOW GRADE SHALL BE DIRECT BURIED SCH. 80 PVC.
5. REFER TO DRAWING G-3 FOR LOCATIONS OF EQUIPMENT RACKS, VALVES, LEVEL TRANSMITTERS, FLOW TRANSMITTERS, AND ANTENNA.
6. ALL DUPLEX RECEPTACLES SHALL BE WP GFI UNLESS OTHERWISE NOTED.
7. REFER TO I&C DRAWING FOR INSTRUMENT INSTALLATION REQUIREMENTS.
8. REFER TO I&C SPECIFICATIONS AND DRAWINGS FOR INSTRUMENTATION POWER AND SIGNAL TVSS INSTALLATION REQUIREMENTS.
9. PROVIDE EQUIPMENT RACK, HARDWARE, ETC. AS REQUIRED FOR THE FOLLOWING EQUIPMENT AT A MINIMUM:
   - A. MAIN DISCONNECT/TVSS DEVICE
   - B. 120/240V PANELBOARD/TVSS DEVICE
   - C. RECEPTACLE
   - D. SP-11

KEYNOTES:

1. PROVIDE CONDUIT/WIRE AS REQUIRED TO CONNECT INSTRUMENT TVSS DEVICES WHERE SHOWN. REFER TO SPECIFICATIONS FOR ADDITIONAL REQUIREMENTS.
2. INTERCEPT EXISTING POWER AND CONTROL WIRING/CONDUIT FOR EXISTING INSTRUMENTATION SHOWN AND INSTALL TVSS DEVICE FOR BOTH POWER AND SIGNAL WIRING PER MANUFACTURER'S REQUIREMENTS. PROVIDE ADDITIONAL CONDUIT/WIRE AS REQUIRED. REFER TO SPECIFICATIONS FOR ADDITIONAL REQUIREMENTS.
3. REFER TO SHEET E-2 FOR ADDITIONAL ROUTING REQUIREMENTS.
4. REFER TO SHEET I-7 FOR ANTENNA POLE INSTALLATION DETAIL.

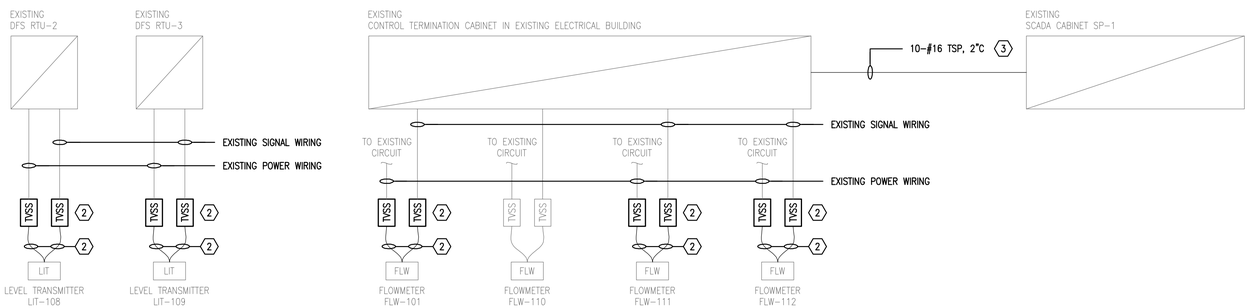

EXISTING INSTRUMENTATION
TVSS ADDITION RISER DIAGRAM

N.T.S.

REV.NO.	DESCRIPTIONS	DATE
	REVISIONS	

SEAL

ARTHUR L. ANCHORS, P.E.
PROFESSIONAL ENGINEER NO. 39804
STATE OF FLORIDA

SEAL

McKIM&CREED
1365 Hamlet Avenue
Clearwater, Florida 33756
Phone: (727)442-7196, Fax: (727)461-3827
EB0006691
www.mckimcreed.com

MANATEE COUNTY, FLORIDA

SWWRF RECLAIMED WATER AUTOMATION

EXISTING REMOTE MODIFICATIONS
SINGLE LINE DIAGRAM

DATE:	JULY 2010
MCE PROJ. #	1024-0128
DRAWN	BMW
DESIGNED	BMW
CHECKED	ALA
PROJ. MGR.	MSL

SCALE
HORIZONTAL: NA
VERTICAL: NA

DRAWING NUMBER
E-4

STATUS: ISSUE FOR BID
REVISION

S:\1024\0128\90-Drawings\ELECTRICAL\E04_01024_0128.dwg, 7/8/2010 10:46:52 AM, Brad Wynne

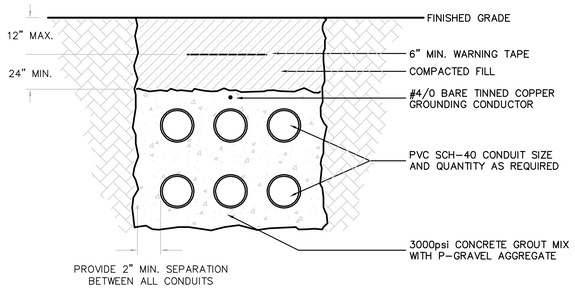

NON-REINFORCED CONCRETE DUCTBANK (YARD PIPING)
N.T.S.

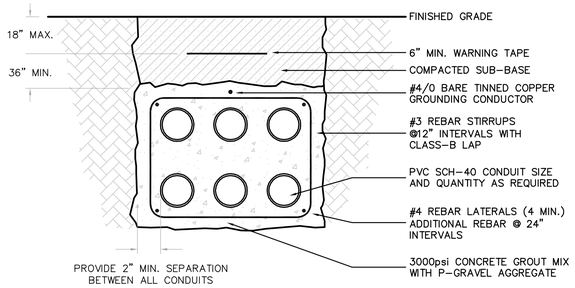

REINFORCED CONCRETE DUCTBANK (ROADWAY CROSSING)
N.T.S.

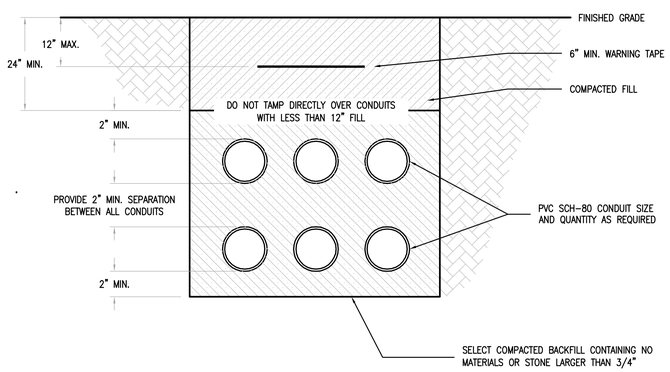

DIRECT BURIED DUCTBANK
SCALE: N.T.S.

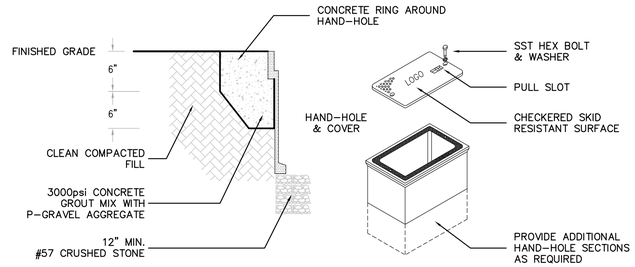

NOTES:

1. HOUSING SHALL BE REINFORCED CONCRETE AND SHALL HAVE A COMPRESSIVE STRENGTH NO LESS THAN 10,000psi.
2. HAND-HOLE AND COVER SHALL BE RATED FOR AASHTO H20 LOADING.
3. PROVIDE STAINLESS STEEL BOLTS, WASHERS AND INSERTS.
4. PROVIDE COVER LOGO "ELECTRICAL" "CONTROLS" OR "COMMUNICATIONS" AS APPLICABLE OR INDICATED ON THE DRAWINGS.
5. MINIMUM BOX SIZE SHALL BE 24" LONG x 17" WIDE x 24" DEEP.

TRAFFIC RATED HAND-HOLE DETAIL
N.T.S.

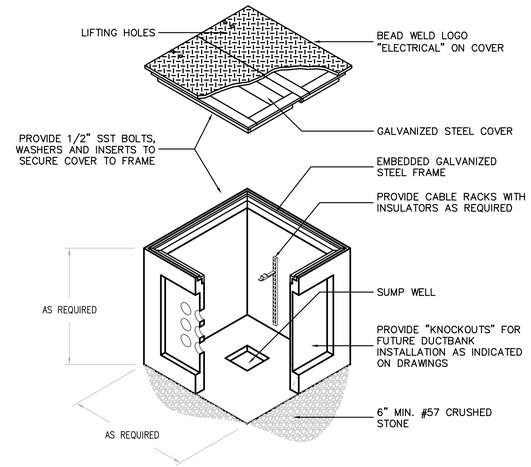

NOTES:

1. BOND ALL METALLIC PARTS WITH #2 TINNED COPPER.
2. EXOTHERMIC WELD CU-CLAD GROUND ROD TO GROUND CABLE.
3. PULL-BOX LID AND LID COLLAR SHALL BE RATED FOR AASHTO H20 LOADING.

STANDARD ELECTRICAL PULL-BOX DETAIL
N.T.S.

GENERAL NOTES:

1. REFER TO SHEET E-0.01 FOR GENERAL ELECTRICAL NOTES, ABBREVIATIONS AND SYMBOLS.

REV.NO.	DESCRIPTIONS	DATE

REVISIONS

SEAL

ARTHUR L. ANCHORS, P.E.
PROFESSIONAL ENGINEER NO. 39804
STATE OF FLORIDA

SEAL

McKIM&CREED
1365 Hamlet Avenue
Clearwater, Florida 33756
Phone: (727)442-7196, Fax: (727)461-3827
EB0006691
www.mckimcreed.com

MANATEE COUNTY, FLORIDA

MANATEE COUNTY, FLORIDA

SWWRF RECLAIMED WATER AUTOMATION

ELECTRICAL DETAILS 1

DATE:	JULY 2010
MCE PROJ. #	1024-0128
DRAWN	BMW
DESIGNED	BMW
CHECKED	ALA
PROJ. MGR.	MSL

SCALE
HORIZONTAL: NA
VERTICAL: NA

DRAWING NUMBER
E-5

STATUS: REVISION
ISSUE FOR BID

S:\1024\0128\90-Drawings\ELECTRICAL\D35_01024_0128.dwg, 7/8/2010 10:46:55 AM, Brad Wynne

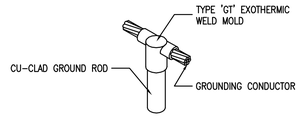

EXOTHERMIC WELD 'GT' CONNECTION
N.T.S.

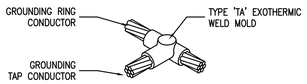

EXOTHERMIC WELD 'TA' CONNECTION
N.T.S.

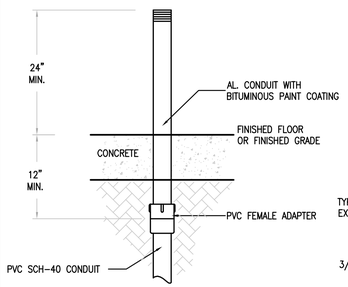

CONDUIT STUB-UP (NEW)
N.T.S.

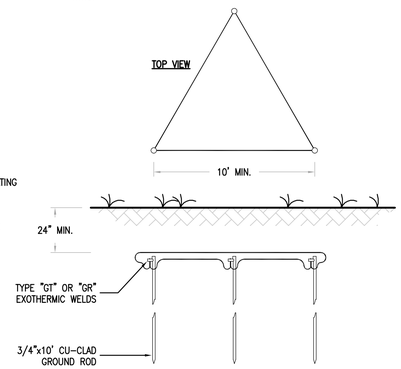

GROUND TRIODE
N.T.S.

GENERAL NOTES:

1. REFER TO SHEET E1 FOR GENERAL ELECTRICAL NOTES, ABBREVIATIONS, SYMBOLS AND LIGHTING FIXTURE SCHEDULE.
2. ALL ELECTRICAL WORK SHALL COMPLY WITH THE NEC, NESC AND LOCAL CODES INCLUDING OWNERS STANDARDS AND REQUIREMENTS.
3. THE NEW ELECTRICAL SERVICE SHALL BE 480/277-VOLT, 3-PHASE, 4-WIRE.
4. ALL POWER CONDUCTORS SHALL BE 600V RATED XHHW-2 STRANDED CU.
5. ALL CONTROL CONDUCTORS SHALL BE 600V RATED THHN/THWN STRANDED CU.
6. ALL EXPOSED CONDUITS SHALL BE RIGID ALUMINUM (AL).
7. ALL UNDERGROUND CONDUITS SHALL BE DIRECT BURIED PVC SCH-80.
8. SERVICE LATERAL CONDUIT SHALL BE CONCRETE ENCASED PVC SCH-80.

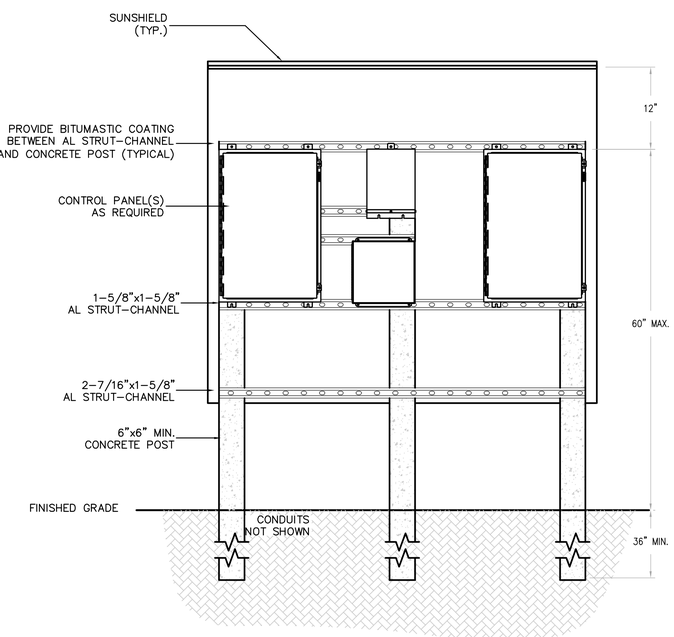

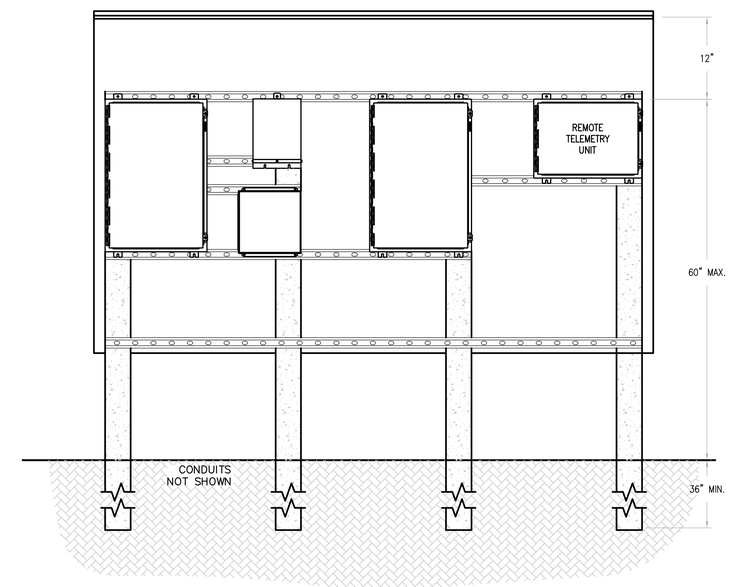

ELECTRICAL EQUIPMENT RACK LAYOUT WITH RTU
N.T.S.

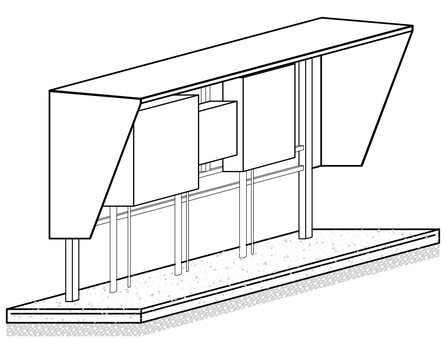

SUN/RAIN HOOD TYPICAL (ISOMETRIC)
N.T.S.

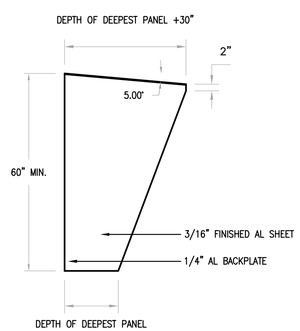

SUN/RAIN HOOD DETAIL (SIDE-VIEW)
N.T.S.

DETAIL NOTES:

1. CONTRACTOR SHALL SUBMIT LAYOUT OF ELECTRICAL EQUIPMENT RACK.
2. CONTRACTOR SHALL NOT CONSTRUCT ELECTRICAL EQUIPMENT RACK PRIOR TO RECEIVING APPROVED SUBMITTAL, INCLUDING ORDERING AND FABRICATION OF MATERIALS.
3. ALL EQUIPMENT MOUNTING HARDWARE SHALL BE 316 STAINLESS-STEEL.
4. CONCRETE SHALL BE 3000psi. CONCRETE PADS SHALL BE REINFORCED WITH 6x6-1.4Wx1.4W WWF. PAD SHALL EXTEND 36" OUT FROM DEEPEST PANEL AND 6" OUT FROM SIDES OF SUN/RAIN HOOD.
5. PROVIDE ADDITIONAL VERTICAL 6" 'I-BEAM' POSTS AND BASES LIKE THOSE SHOWN ON PLANS TO SPAN GREATER DISTANCES GREATER THAN 96".
6. ALARM STROBE SHALL BE MOUNTED, WATER-TIGHT, ATOP PUMP CONTROL PANEL 'PCP'.
7. PROVIDE WEATHERPROOF CORROSION RESISTANT FLUORESCENT FIXTURE MOUNTED UNDERNEATH SUN/RAIN HOOD, LIGHT SWITCH AND GFIC RECEPTACLE.
8. STRUT-CHANNEL SHALL BE MOUNTED TO 'I-BEAM' POSTS WITH STAINLESS-STEEL FASTENERS AND GALVANIZED CLAMPING HARDWARE.
9. THE BOTTOM OF EQUIPMENT SHALL BE MOUNTED NO LESS THAN 20" ABOVE FINISHED CONCRETE PERSONNEL PAD.
10. CONDUITS SHALL BE INSTALLED UNBROKEN (NO FITTINGS, COUPLINGS, UNIONS, ETC.) THROUGH CLASS-1/DIV-II BOUNDARY.

ELECTRICAL EQUIPMENT RACK LAYOUT (FRONT ELEVATION)
N.T.S.

REV.NO.	DESCRIPTIONS	DATE

REVISIONS

SEAL

ARTHUR L. ANCHORS, P.E.
PROFESSIONAL ENGINEER NO. 39804
STATE OF FLORIDA

SEAL

McKIM&CREED
1365 Hamlet Avenue
Clearwater, Florida 33756
Phone: (727)442-7196, Fax: (727)461-3827
EB0006691
www.mckimcreed.com

MANATEE COUNTY, FLORIDA

SWWRF RECLAIMED WATER AUTOMATION

ELECTRICAL DETAILS 2

DATE:	JULY 2010
MCE PROJ. #	1024-0128
DRAWN	BMW
DESIGNED	BMW
CHECKED	ALA
PROJ. MGR.	MSL

SCALE
HORIZONTAL: NA
VERTICAL: NA

DRAWING NUMBER
E-6

STATUS: ISSUE FOR BID
REVISION

S:\1024\0128\90-Drawings\ELECTRICAL\E06_01024_0128.dwg, 7/8/2010 10:48:55 AM, Brad Wynne