SOUTHWEST WATER RECLAMATION FACILITY CHLORINE CONTACT CHAMBER REHABILITATION AND RECHARGE WELL PUMP STATION

COUNTY PROJECT No. 6091780
ISSUED FOR BID
SEPTEMBER 2019

Manatee County FLORIDA

MANATEE COUNTY, FLORIDA

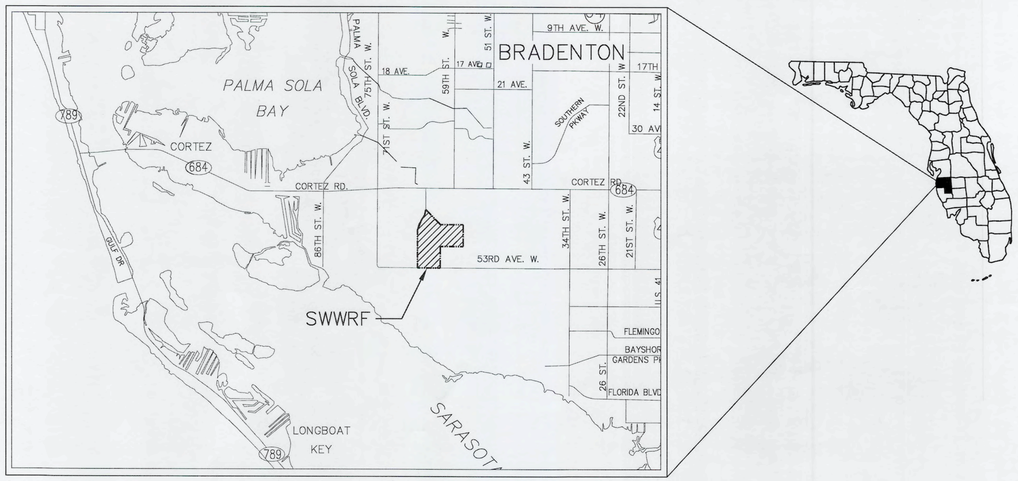

PROJECT VICINITY MAP
SECTION 35S, TOWNSHIP 18E, RANGE 1

McKIM&CREED
1365 Hamlet Avenue
Clearwater, FL 33756
Phone: (727)442-7196, Fax: (727)461-3827
CA Lic No. 29588
www.mckimcreed.com

ANTHONY L. PEVEC
LICENSE
No. 66706
STATE OF FLORIDA
PROFESSIONAL ENGINEER
9/16/2019

ANTHONY L. PEVEC, P.E.
No. 66706

S:\102A\071\90-Drawings\GENERAL\G01-10240171.dwg, 9/16/2019 3:41:53 PM, Carlos Nogaro

SWWRF CCC REHAB AND RWPS

SEPTEMBER 2019

SWWRF CCC REHAB AND RWPS_10240171

G-01 - COVER SHEET

SHEET LIST TABLE

SHEET NUMBER	SHEET TITLE
GENERAL	
G-01	COVER SHEET
G-02	INDEX OF SHEETS
G-03	GENERAL NOTES
G-04	SYMBOLS AND ABBREVIATIONS
G-05	EXISTING CCC AND EFFLUENT PROCESS FLOW DIAGRAM
G-06	PROPOSED CCC AND EFFLUENT PROCESS FLOW DIAGRAM
DEMO	
D-01	DEMOLITION SITE PLAN
D-02	DAF POLYMER BUILDING - DEMOLITION
D-03	CCC BLOWER BUILDING DEMOLITION
D-04	PRIMARY SLUDGE PUMPING AND PIPING AND SCUM PIPING - DEMOLITION
CIVIL	
C-01	SITE PLAN
C-02	YARD PIPING PLAN
C-03	YARD PIPING PLAN-CCC
C-04	YARD PIPING SECTIONS
C-05	CIVIL DETAILS
C-06	CIVIL DETAILS
C-07	CIVIL DETAILS
C-08	CIVIL DETAILS
STRUCTURAL	
S-01	STRUCTURAL NOTES AND LEGEND
S-02	ANOXIC BASINS DEMOLITION TOP AND ENLARGED PLANS
S-03	ANOXIC BASIN CHANNEL EXTENSION AND ANOXIC BASIN TOP PLAN
S-04	ANOXIC BASIN DETAILS
S-05	ANOXIC BASIN MIXER SHAFT OPENING PLAN SECTIONS AND DETAILS
S-06	ANOXIC BASIN CHANNEL EXTENSION PLANS AND SECTIONS
S-07	CCC COVER PLAN AND RECHARGE WELL PUMP STATION PLAN
S-08	RECHARGE WELL PUMP STATION PAD PLAN AND SECTIONS
S-09	CCC COVER PLAN AND BYPASS WALKWAY DETAILS
S-10	STRUCTURAL DETAILS
S-11	ALUM. CONDUIT CHANNEL PLAN AND DETAILS
S-12	STRUCTURAL DETAILS
S-13	STRUCTURAL DETAILS
S-14	RAILING DETAILS

SHEET LIST TABLE

SHEET NUMBER	SHEET TITLE
MECHANICAL	
M-01	CCC DEMOLITION PLAN
M-02	CCC PROPOSED PLAN (LOWER)
M-02A	CCC PROPOSED PLAN (UPPER)
M-03	CCC SECTIONS
M-04	RECHARGE WELL PUMP STATION PLAN AND SECTIONS
M-05	ANOXIC BASIN DEMOLITION PLAN
M-06	ANOXIC BASIN PROPOSED PLAN
M-07	ANOXIC BASIN INFLUENT CHANNEL DEMOLITION PLAN AND SECTION
M-08	ANOXIC BASIN INFLUENT CHANNEL PROPOSED PLAN AND SECTION
M-09	LIQUID AMMONIUM SULFATE (LAS) STORAGE AND FEED SYSTEM PLAN VIEW
M-10	LIQUID AMMONIUM SULFATE (LAS) FEED SYSTEM MODIFICATION DETAILS
M-11	MECHANICAL DETAILS
M-12	MECHANICAL DETAILS
ELECTRICAL	
E-01	ELECTRICAL NOTES, ABBREVIATIONS AND LEGEND
E-02	MEDIUM VOLTAGE SINGLE LINE POWER DIAGRAM
E-03	MEDIUM VOLTAGE SITE PLAN
E-04	MEDIUM VOLTAGE TABLES AND DETAILS
E-05	SOUTH BLOWER BUILDING ELECTRICAL PLAN AND ANOXIC SINGLE LINES
E-06	CCC SINGLE LINE DIAGRAMS AND PANEL SCHEDULES
E-07	ELECTRICAL PARTIAL SITE PLAN
E-08	ELECTRICAL BUILDING PLAN
E-09	RECHARGE WELL PUMP STATION ELECTRICAL PLAN
E-10	CHLORINE CONTACT CHAMBER ELECTRICAL PLAN
E-11	CHEMICAL BUILDING ELECTRICAL PLAN
E-12	WIRE AND CONDUIT SCHEDULE
E-13	ELECTRICAL INTERCONNECTION DIAGRAM
E-14	ELECTRICAL CONTROL SCHEMATICS
E-15	ELECTRICAL DETAILS I
E-16	ELECTRICAL DETAILS II
E-17	ANOXIC BASIN ELECTRICAL PLANS
INSTRUMENTATION	
I-01	P&ID GENERAL NOTES, LEGEND AND ABBREVIATIONS
I-02	INSTRUMENTATION DETAILS
I-03	INSTRUMENTATION AND PANEL DETAILS
I-04	INSTRUMENTATION AND PANEL DETAILS - ANALYZER PANEL
I-05	NETWORK LAYOUT EXISTING
I-06	NETWORK LAYOUT MODIFICATIONS
I-07	P&ID RECHARGE WELL PUMP STATION
I-08	P&ID CHLORINE CONTACT CHAMBER MIXERS
I-09	P&ID LIQUID AMMONIUM SULFATE PUMPS STORAGE AND FEED

REV.NO.	DESCRIPTIONS	DATE

REVISIONS

ANTHONY L. PEVEC LICENSE No. 66706 STATE OF FLORIDA PROFESSIONAL ENGINEER
ANTHONY L. PEVEC, P.E.
No. 66706

SEAL

McKIM&CREED
1365 Hamlet Avenue
Clearwater, Florida 33756
Phone: (727)442-7196, Fax: (727)461-3827
CA LIC No. 29588
www.mckimcreed.com

Manatee County FLORIDA

SWWRF
CCC REHAB AND
RECHARGE WELL PS PROJECT

INDEX OF SHEETS

DATE:	SEPTEMBER, 2019
MCE PROJ. #	1024-0171
DRAWN	CN
DESIGNED	TP
CHECKED	JV
PROJ. MGR.	TP

SCALE
HORIZONTAL: NA
VERTICAL: NA

DRAWING NUMBER
G-02

STATUS: ISSUED FOR BID
REVISION

GENERAL NOTES

1. THESE PLANS ARE SOLELY TO ASSIST THE CONTRACTOR IN ASSESSING THE NATURE AND EXTENT OF THE EXISTING CONDITIONS WHICH MAY BE ENCOUNTERED DURING THE COURSE OF THE WORK. CONTRACTORS ARE DIRECTED TO CONDUCT WHATEVER INVESTIGATION THEY DEEM NECESSARY, PRIOR TO BIDDING, TO DETERMINE THE ACTUAL CONDITIONS THAT WILL BE ENCOUNTERED.

2. LOCATIONS, ELEVATIONS AND DIMENSIONS OF EXISTING UTILITIES, STRUCTURES, AND OTHER FEATURES ARE SHOWN BASED ON THE BEST INFORMATION AVAILABLE AT THE TIME OF PREPARATION OF THESE PLANS BUT DO NOT PURPORT TO BE ABSOLUTELY CORRECT. THE CONTRACTOR SHALL VERIFY, PRIOR TO CONSTRUCTION, THE LOCATIONS, ELEVATIONS, AND DIMENSIONS OF ALL EXISTING UTILITIES, STRUCTURES, AND OTHER FEATURES (WHETHER OR NOT SHOWN ON THE PLANS) AFFECTING HIS WORK.

3. THE CONTRACTOR SHALL REVIEW AND VERIFY ALL DIMENSIONS ON THE PLANS AND REVIEW ALL FIELD CONDITIONS THAT MAY AFFECT CONSTRUCTION. SHOULD DISCREPANCIES OCCUR, THE CONTRACTOR SHALL NOTIFY THE ENGINEER TO OBTAIN WRITTEN CLARIFICATION BEFORE COMMENCING WITH CONSTRUCTION.

4. THE CONTRACTOR SHALL PROTECT ALL EXISTING STRUCTURES, STORM DRAINS, SEWERS, UTILITIES, AND OTHER FACILITIES IN THE CONSTRUCTION AREA. THE CONTRACTOR SHALL REPAIR ANY DAMAGES DUE TO HIS CONSTRUCTION ACTIVITIES AT NO ADDITIONAL COST TO THE OWNER.

5. WHERE IT IS NECESSARY TO DEFLECT PIPE EITHER HORIZONTALLY OR VERTICALLY, PIPE JOINT DEFLECTION SHALL NOT EXCEED 75% OF THE MANUFACTURERS' MAXIMUM RECOMMENDED DEFLECTION.

6. THE CONTRACTOR SHALL BE RESPONSIBLE FOR THE MAINTENANCE OF THE EXISTING DRAINAGE SYSTEM WITHIN THE LIMITS OF THE PROJECT AREA FOR THE DURATION OF THE PROJECT.

7. THE CONTRACTOR SHALL PROVIDE CERTIFIED RECORD DRAWINGS AS OUTLINED IN THE SPECIFICATIONS. RED-LINE DRAWINGS SHALL BE CURRENT WITH EACH PAY APPLICATION SUBMITTED AND WILL BE CHECKED AS PART OF THE PAY APPLICATION REVIEW PROCESS. PAYMENT WILL NOT BE MADE TO CONTRACTOR WITHOUT APPROVED RED-LINE DRAWINGS.

8. FIELD CONDITIONS MAY NECESSITATE ALIGNMENT AND GRADE DEVIATION OF THE PROPOSED PIPELINES TO AVOID CONFLICTS. NO ADDITIONAL PAYMENT SHALL BE MADE WITHOUT PRIOR APPROVAL OF THE OWNER AND THE OWNER'S ENGINEER.

9. THE CONTRACTOR SHALL INCLUDE IN HIS BID; BY-PASS PUMPING FACILITIES, PUMPS, FITTINGS, LABOR, ETC, AS NECESSARY, BASED ON METHOD AND SEQUENCE OF CONSTRUCTION TO COMPLETE ALL WORK WHILE MAINTAINING THE EXISTING WASTEWATER TREATMENT PLANT OPERATIONS AT ALL TIMES.

10. ALL PROPOSED WORK SHALL BE COORDINATED WITH WASTEWATER TREATMENT PLANT PERSONNEL AND MANATEE COUNTY UTILITIES DEPARTMENT AT LEAST TWO WEEKS IN ADVANCE OF PROPOSED CONSTRUCTION.

11. THE CONTRACTOR SHALL FURNISH SHOP DRAWINGS TO THE ENGINEER FOR APPROVAL OF ALL PIPE CONNECTIONS, TRANSITIONS, AND SPECIALS PRIOR TO FABRICATION OR DELIVERY TO THE JOB SITE.

12. CONNECTIONS TO EXISTING FACILITIES SHALL BE ACCOMPLISHED IN A NEAT WORKMANLIKE MANNER. WHEN FIELD CONDITIONS INDICATE ANY VARIANCE FROM DETAILED METHODS, THE CONTRACTOR SHALL PROVIDE COMPREHENSIVE AND DETAILED DRAWINGS FOR OWNER REVIEW AND APPROVAL PRIOR TO MAKING THE CONNECTIONS.

13. UNLESS OTHERWISE INDICATED OR APPROVED, ALL BELOW GROUND DUCTILE IRON PIPE SHALL HAVE PUSH-ON OR MECHANICAL JOINTS, AND ALL ABOVE GROUND DUCTILE IRON PIPE SHALL HAVE FLANGED JOINTS. ALL JOINTS SHALL BE FULLY RESTRAINED.

14. ALL PIPELINES SHALL HAVE A MINIMUM COVER OF 36" BELOW EXISTING GRADE UNLESS OTHERWISE NOTED OR DIRECTED.

15. WATER SHALL NOT BE PERMITTED IN EXCAVATIONS AND TRENCHES DURING CONSTRUCTION. DEWATERING IS REQUIRED TO A MINIMUM OF 18" BELOW BOTTOM OF EXCAVATION.

16. THE CONTRACTOR SHALL NOT ALLOW ANY DISCHARGE OF WASTEWATER TO LANDS AND/OR ADJACENT WATER BODIES OR STORM DRAINS. ANY LEAKAGE MUST BE CONTAINED AND TRANSFERRED BY THE CONTRACTOR TO THE PLANT DRAIN PUMP STATION AT THE WASTEWATER TREATMENT PLANT.

17. ALL EXPOSED PIPING SHALL BE PAINTED WITH DESIGNATED COLORS ASSOCIATED WITH THEIR USAGE AS PROVIDED IN THE SPECIFICATIONS.

18. ALL NEW PIPELINES SHALL BE FLUSHED, PRESSURE TESTED, AND APPROVED PRIOR TO TIE-INS TO EXISTING FACILITIES. THE CONTRACTOR WILL BE ALLOWED TO USE TEMPORARY PLUGS FOR PRESSURE TESTING.

19. ALL CONCRETE THRUST BLOCKS INSTALLED FOR TESTING PURPOSES AND NOT REQUIRED FOR THE PIPELINE SHALL BE REMOVED AND DISPOSED OF BY THE CONTRACTOR PRIOR TO FINAL ACCEPTANCE.

20. CONTRACTOR SHALL MAINTAIN A CLEAR PATH FOR ALL SURFACE WATER DRAINAGE STRUCTURES AND DITCHES DURING ALL PHASES OF CONSTRUCTION.THE CONTRACTOR SHALL BE REQUIRED TO INSTALL ALL EROSION, SEDIMENT AND TURBIDITY CONTROL MEASURES PRIOR TO CONSTRUCTION OF ANY COMPONENTS ASSOCIATED WITH THE PROJECT. SEDIMENT CONTROL INCLUDES SILT DAMS, TRAPS, EROSION PROTECTION, AND ANY OTHER APPURTENANCES NEEDED BUT NOT NECESSARILY SHOWN ON THESE DRAWINGS.

21. CONTRACTOR SHALL PROVIDE PROTECTIVE MATTING, FUEL CONTAINMENT AND ALL OTHER MATERIALS, EQUIPMENT AND LABOR TO PROTECT THE STAGING AREA DURING CONSTRUCTION.

22. CONTRACTOR SHALL, PRIOR TO BEGINNING CONSTRUCTION, SUBMIT A "FUELING SPILL PREVENTION PLAN" THAT SHALL CLEARLY INDICATE HOW FUEL SPILLS WILL BE PREVENTED WHEN FUELING BOTH WITHIN AND OUTSIDE OF THE STAGING AREA.

23. CONTRACTOR SHALL SUBMIT A DEWATERING PLAN FOR APPROVAL PRIOR TO BEGINNING CONSTRUCTION. DEWATERING SHALL BE CONDUCTED IN ACCORDANCE WITH THE BMPS IDENTIFIED IN CHAPTER 4, 4.40 "DEWATERING" OF "THE FLORIDA STORMWATER EROSION AND SEDIMENTATION CONTROL INSPECTOR'S MANUAL".

24. CONTRACTOR SHALL COORDINATE WORK SUCH THAT THE PLANT SHALL STAY IN OPERATION AT ALL TIMES.

25, LINE INACTIVATIONS SHALL BE CONCLUDED AT OFF PEAK TIMES AS DICTATED BY PLANT OPERATIONS STAFF.

26. CONTRACTOR SHALL EMPLOY A PROFESSIONAL SURVEYOR, LICENSED IN THE STATE OF FLORIDA TO PERFORM CONSTRUCTION STAKING IN ACCORDANCE WITH RULE 61G17-6.004 (3) OF THE FLORIDA ADMINISTRATIVE CODE.

RESTORATION AND MISCELLANEOUS NOTES

1. THE CONTRACTOR SHALL PROVIDE AN ASPHALT PATCH FOR TRENCH AREAS CONSTRUCTED IN EXISTING ROADWAYS. ADJUST ALL CASTINGS TO MATCH NEW PAVEMENT SURFACE.

2. THE CONTRACTOR SHALL REPLACE ALL EXISTING PAVING, STABILIZED EARTH, CURBS, SIDEWALKS, FENCES, LANDSCAPING AND OTHER IMPROVEMENTS WITH THE SAME OR BETTER TYPE OF MATERIAL THAT WAS REMOVED DURING CONSTRUCTION OR AS DIRECTED BY THE ENGINEER.

3. ALL RESTORATION WORK PERFORMED THROUGHOUT THE PROJECT SHALL CONFORM TO EXISTING LINES AND GRADES UNLESS OTHERWISE NOTED.

4. ALL EXISTING FENCES DISTURBED DURING CONSTRUCTION SHALL BE REPLACED AND REINSTALLED BY THE CONTRACTOR AT NO ADDITIONAL COST TO THE OWNER UNLESS SHOWN TO BE REMOVED ON CONSTRUCTION PLANS.

5. LIMITS OF PROPOSED ROADWAY OVERLAY SHOWN ARE APPROXIMATE. CONTRACTOR SHALL OVERLAY ALL DISTURBED AREAS OF ACCESS ROAD AS PART OF THIS PROJECT IN ACCORDANCE WITH THE DETAILS.

6. CONTRACTOR SHALL RESTORE ALL IRRIGATION SYSTEM COMPONENTS TO PRE-CONSTRUCTION CONDITIONS.

7. THE CONTRACTOR SHALL RAISE EXISTING MANHOLE FRAMES AND COVERS TO MATCH FINAL GRADE.

8. CONTRACTOR SHALL RESTORE GRADE TO PRECONSTRUCTION ELEVATIONS UNLESS OTHERWISE NOTED.

9. THE CONTRACTOR SHALL PROVIDE A 10'x20' TEMPORARY STORAGE UNIT ONSITE 30 DAYS PRIOR TO COMMENCING ANY MODIFICATION TO THE PROPOSED ELECTRICAL ROOM. STORAGE UNIT SHALL REMAIN ONSITE DURING ACTIVE CONSTRUCTION PERIOD.

SIDEWALK NOTES

1. ALL SIDEWALKS SHALL BE CONSTRUCTED WITH 4 INCH THICK 3000 PSI CLASS I CONCRETE REINFORCED WITH 6X6 NO. 10 MESH.

2. SIDEWALKS SHALL BE CONSTRUCTED TO THE SPECIFICATIONS OF THE MANATEE COUNTY DEVELOPMENT STANDARDS AND A MINIMUM OF FIVE (5) FEET WIDE.

3. THE CONCRETE SHALL BE GIVEN A BROOM FINISH. THE SURFACE VARIATIONS SHALL NOT BE MORE THAN 1/2 INCH UNDER A TEN-FOOT STRAIGHTEDGE, NOR MORE THAN 1/8 INCH ON A FIVE-FOOT TRAVERSE SECTION. THE EDGE OF THE SIDEWALK SHALL BE CAREFULLY FINISHED WITH AN EDGING TOOL HAVING A RADIUS OF 1/2 INCH.

4. EXPANSION JOINT: EXPANSION JOINTS BETWEEN THE SIDEWALK AND DRIVEWAYS OR AT FIXED OBJECTS AND SIDEWALK INTERSECTIONS SHALL BE 1/2 INCH JOINTS.

5. CONTRACTION JOINTS: FIXED OPEN-TYPE CONTRACTION JOINTS SHALL BE FORMED BY STAKING A METAL BULKHEAD IN PLACE AND DEPOSITING THE CONCRETE ON BOTH SIDES. AFTER THE CONCRETE HAS SET SUFFICIENTLY TO PRESERVE THE WIDTH AND SHAPE OF THE JOINT, THE BULKHEAD SHALL BE REMOVED. AFTER THE SIDEWALK HAS BEEN FINISHED OVER THE JOINT, THE SLOT SHALL BE EDGED WITH A TOOL HAVING A 1/2 INCH RADIUS. SAWED JOINTS: A SLOT APPROXIMATELY 3/16 INCH WIDE AND NOT LESS THAN 1-1/2 INCHES DEEP SHALL BE CUT WITH A CONCRETE SAW AFTER THE CONCRETE HAS SET.

SURVEY NOTES

1. THIS SURVEY IS REFERENCED TO A GRID PROJECTION OF THE STATE PLANE COORDINATE SYSTEM OF FLORIDA WEST ZONE (NAD 83/11 ADJUSTMENT).

2. THE FOLLOWING NGS VERTICAL CONTROL POINT WAS RECOVERED AND UTILIZED FOR THE ELEVATIONS INDICATED HEREON: "SABAL PALM" NAVD 1988 ELEVATION 14.62'.

3. THIS IS NOT A BOUNDARY SURVEY.

4. THIS SURVEY IS SUBJECT TO PERTINENT EASEMENTS, ADDITIONAL RIGHTS-OF-WAY AND RESTRICTIONS OF RECORD, IF ANY.

5. THIS SURVEY DRAWING WAS PREPARED FOR THE EXCLUSIVE USE OF THE PARTY OR PARTIES CERTIFIED TO BELOW FOR THE EXPRESS PURPOSE STATED HEREON AND/OR CONTAINED IN THE CONTRACT BETWEEN HYATT SURVEY SERVICES, INC. AND THE CLIENT FOR THIS PROJECT. COPYING, DISTRIBUTING AND/OR USING THIS DRAWING, IN WHOLE OR IN PART FOR ANY PURPOSE OTHER THAN ORIGINALLY INTENDED WITHOUT WRITTEN CONSENT FROM HYATT SURVEY SERVICES, INC IS STRICTLY PROHIBITED AND RENDERS THE SURVEYOR'S CERTIFICATION, SIGNATURE AND SEAL NULL AND VOID. ANY QUESTIONS CONCERNING THE CONTENT OR PURPOSE OF THIS DRAWING SHOULD BE DIRECTED TO HYATT SURVEY SERVICES, INC.

6. ELEVATIONS SHOWN ARE BASED ON NORTH AMERICAN VERTICAL DATUM, 1988 (NAVD 88). CONTRACTOR SHALL NOTE THAT ELEVATIONS ON RECORD DRAWINGS FOR THIS FACILITY MAY BE BASED ON NATIONAL GEODETIC VERTICAL DATUM, 1929 (NGVD 1929). THE CONVERSION OF VERTICAL DATUM FOR THIS SITE IS NGVD=NAVD 88+0.99 FT.

UTILITY NOTES

1. THE CONTRACTOR SHALL BE RESPONSIBLE FOR COORDINATING WITH THE FOLLOWING JURISDICTIONAL BODIES AND UTILITY COMPANIES:

SUNSHINE STATE ONE CALL OF FLORIDA
1-(800) 432-4770

INVESTIGATE BEFORE YOU EXCAVATE
CALL LOCAL PUBLIC UTILITY NOTIFICATION CENTER
TOLL FREE 1-800-432-4770
MIN. 48 HOURS BEFORE YOU EXCAVATE

MANATEE COUNTY PUBLIC WORKS DEPT.
1022 26TH AVENUE EAST
BRADENTON, FL. 34208
SCOTT MAY, P.E.
(941) 708-7450 EXT. 7650
FAX: (941) 708-7415

FRONTIER
1701 RINGLING BLVD.
SARASOTA, FL. 34236
JOHN PLOTT
(941) 906-6707
FAX: (941) 906-6706
john.plott@ftr.com

TECO/PEOPLES GAS CO.
8261 VCO COURT
SARASOTA, FL. 34240
(941) 342-4030
DAN SHANAHAN
FAX: (941) 342-4011
EMERGENCY: 1-877-832-6911

FLORIDA POWER & LIGHT
1253 12TH AVENUE EAST
PALMETTO, FL. 34221
GREG COKER
(941) 723-4430
FAX: (941) 723-4444
EMERGENCY: 1-800-4-OUTAGE
greg_coker@fpl.com

SOUTHWEST FLORIDA WATER MANAGEMENT DISTRICT SARASOTA SERVICE OFFICE
STEVE LOPES
6750 FRUITVILLE ROAD
SARASOTA, FL. 34240
(941) 377-3722
FAX: (941) 373-7660

ATMS.
2101 47TH TERRACE EAST
BRADENTON, FL. 34203
VISHAL KAKAAD, P.E.
(941) 749-3500 EXT. 7812
FAX: (941) 749-3571
vishal.kakaad@mymanatee.org

MANATEE COUNTY HEALTH DEPT.
410 6TH AVENUE EAST
BRADENTON, FL. 34208
(941) 748-0747 EXT. 1355
FAX: (941) 750-9364

FLORIDA GAS TRANSMISSION
7804 ANDERSON ROAD
TAMPA, FL. 33634
CHAD HARREL
PH. (813) 466-3327
E-mial: chadharrel@sug.com

PEACE RIVER ELECTRIC COOPERATIVE, INC.
P.O. BOX 1310
WACHULA, FL. 33873
KENDELL COKER
(863) 767-4660
kendell.coker@preco.coop

DEPARTMENT OF ENVIRONMENTAL PROTECTION
13051 N. TELECOM PKWY.
TEMPLE TERRACE, FL. 33637
ED WATSON
PH: (813) 470-5875
FAX: (813) 470-5993

CHARTER COMMUNICATION
5413 E. STATE ROAD 64
BRADENTON, FL. 34208-5535
TOM WRIGHT
(941) 748-3816 EXT. 21348
tom.wright@charter.com

MANATEE COUNTY TRANSPORTATION DEPARTMENT
ALLEN BRENTLEY
2904 12TH STREET COURT E
BRADENTON, FL. 33208
(941) 708-7509

MANATEE COUNTY UTILITIES OPERATION
KATHY McMAHON
4422-C 66TH STREET W.
BRADENTON, FL. 34210

PARAGON CABLE -
BRIGHTHOUSE NETWORK, LLC
WALTER KROL
5413 S.R. 64 E
BRADENTON, FL. 34208
(941) 748-3816 EXT. 24053

2. ALL UTILITY CONSTRUCTION SHALL BE IN CONFORMANCE WITH THE LATEST VERSION OF THE MANATEE COUNTY UTILITY STANDARDS.

3. ALL BELOW GROUND DUCTILE IRON PIPE SHALL BE ENCASED IN A POLYETHYLENE WRAP IN ACCORDANCE WITH AWWA STANDARDS.

4. ALL VALVE BOX COVERS SHALL BE PAINTED TO INDICATE THEIR TYPE OF SERVICE.

5. ALL TEST POINT TAPPING SHALL BE CUT LOOSE FROM THE CORPORATION STOP AND COMPLETELY REMOVED AND DISPOSED OF BY THE CONTRACTOR PRIOR TO FINAL ACCEPTANCE. THE CORPORATION STOP SHALL BE CAPPED AND REMAIN IN PLACE.

REV.NO.	DESCRIPTIONS	DATE

REVISIONS

ANTHONY L. PEVEC LICENSE No.66706 STATE OF FLORIDA PROFESSIONAL ENGINEER
ANTHONY L. PEVEC, P.E.
No. 66706

SEAL

McKIM&CREED
1365 Hamlet Avenue
Clearwater, Florida 33756
Phone: (727)442-7196, Fax: (727)461-3827
CA LIC No. 29588
www.mckimcreed.com

Manatee County FLORIDA

SWWRF
CCC REHAB AND
RECHARGE WELL PS PROJECT

GENERAL NOTES

DATE:	SEPTEMBER, 2019
MCE PROJ. #	1024-0171
DRAWN	CN
DESIGNED	TP
CHECKED	JV
PROJ. MGR.	TP

SCALE
HORIZONTAL: NA
VERTICAL: NA

DRAWING NUMBER
G-03

STATUS: ISSUED FOR BID
REVISION

GENERAL ABBREVIATIONS

@.	AT
ABW	AUTOMATIC BACKWASH
A/C	AIR CONDITIONER UNIT
AC	ACRES
AC	ASPHALTIC CONCRETE
ABD	ABANDONED
AL./ALUM.	ALUMINUM
ANCH.	ANCHOR
APPROX.	APPROXIMATE
BLDG.	BIULDING
BM.	BEAM
BOT./BOTT.	BOTTOM
(C)	CALCULATED DATA
C	CHANNEL
C.	CONDUIT
C.B.	CATCH BASIN
CCR	CERTIFIED CORNER RECORD
CHEM	CHEMICAL
CHKR	CHECKERED
CIR.	CIRCLE
CLF	CHAIN LINK FENCE
℄	CENTERLINE
CMP	CORRUGATED METAL PIPE
COL.	COLUMN
CONN.	CONNECTOR/CONNECTION
CONC.	CONCRETE
COR	CORNER
CPB	CONDOMINIUM PLAT BOOK
C/T	CURB TIE
CU.	COPPER
(D)	DEED DATA
D.	DEEP/DRAIN
DB	DEED BOOK
DBL.	DOUBLE
DHW.	DESIGN HIGH WATER
DISCH.	DISCHARGE
DN.	DOWN
DRWY	DRIVEWAY
E.W.	EACH WAY
EA.	EACH
ECMP	ELLIPTICAL CORRUGATED METAL PIPE
EL./ELEV.	ELEVATION
ELEC.	ELECTRICAL CONDUIT
EP	EDGE OF PAVEMENT
ERCP	ELLIPTICAL REINFORCED CONCRETE PIPE
ETC.	AND SO FORTH
EXIST.	EXISTING
EXP.	EXPANSION
(F)	FIELD DATA
FCM	FOUND CONCRETE MONUMENT
FDOT	FLORIDA DEPARTMENT OF TRANSPORTATION
FF	FINISHED FLOOR
FIR	FOUND IRON ROD
FND	FOUND NAIL & DISC
FOP	FOUND OPEN PIPE
FRP	FIBERGLASS REINFORCED PLASTIC
FRRS	FOUND RAILROAD SPIKE
F/T	FENCE TIE
FT.	FOOT
FTG.	FOOTING
FXC	FOUND X-CUT
GALV.	GALVANIZED
GDRL	GUARDRAIL
GE	GRATE ELEVATION
GEN	GENERATOR
GI	GRATED INLET
GPM	GALLONS PER MINUTE
GRTG.	GRATING
G.S.	GALVANIZED STEEL
GST	GROUND STORAGE TANK
GR./GRD.	GRADE
GWP	GUY WIRE POLE
HDWALL	HEADWALL
H.R.	HANDRAIL
HWL	HIGH WATER LEVEL
IE	INVERT ELEVATION
IN.	INCH
INJ.	INJECTOR/INJECTION
INV.	INVERT
IP	IRON PIPE
IR	IRON ROD
J.B.	JUNCTION BOX
JT.	JOINT
(L)	LEGAL DESCRIPTION DATA
LAS	LIQUID AMMONIUM SULFATE
LB	LICENSED BUSINESS
LG.	LONG
LN.	LANE
LP	LIGHT POLE
LS	LICENSED SURVEYOR
MAS	MASONRY
MAX.	MAXIMUM
MCC	MOTOR CONTROL CENTER
MES	MITERED END SECTION
MG	MILLION GALLONS
MGD	MILLION GALLONS PER DAY
MES	MITERED END SECTION
MHW	MEAN HIGH WATER
MON.	MONUMENT
NG	NATURAL GROUND
N.T.S.	NOT TO SCALE
NO.	NUMBER
NP	NORMAL POOL
ø	DIAMETER/PHASE
O/A	OVERALL
OPNG.	OPENING
OR	OFFICIAL RECORDS BOOK
(P)	PLAT BOOK
PCCP	PRE-STRESSED CYLINDRICAL CONCRETE PIPE
PG	PAGE
PLCS.	PLACES
PLS	PROFESSIONAL LAND SURVEYOR
POB	POINT OF BEGINNING
POC	POINT OF COMMENCEMENT
POT	POTABLE
PP	POWER POLE
PRM	PERMANENT REFERENCE MONUMENT
PROP.	PROPOSED
PSM	PROFESSIONAL SURVEYOR & MAPPER
P/T	PAVEMENT TIE
P.V.	PLUG VALVE
PVMT	PAVEMENT
R.	RADIUS/RISER/RELAY
RCP	REINFORCED CONCRETE PIPE
REF.	REFERENCED
REINF.	REINFORCED/REINFORCING
REQ'D	REQUIRED
RESTR.	RESTRAINED
RLS	REGISTERED LAND SURVEYOR
RW;R/W	RIGHT-OF-WAY
SAN.	SANITARY
SEC.	SECTION
SGL	SINGLE
SHW	SEASONAL HIGH WATER
SIR	SET IRON ROD $\frac{1}{2}$" LB 6113
SND	SET NAIL & DISC LB 6113
SPRK	SPRINKLER
SQ.	SQUARE
SN.	SIGN
SR	STATE ROAD
SSMH	SANITARY SEWER MANHOLE
S/T	SIDEWALK TIE
STL.	STEEL
STY	STORY
S/W;SWK	SIDEWALK
SYM.	SYMBOL
TBM	TEMPORARY BENCH MARK
TOB	TOP OF BANK
T.&B.	TOP & BOTTOM
TEL	TELEPHONE
TEMP.	TEMPORARY
THK	THICK
TOS	TOE OF SLOPE
TYP.	TYPICAL
UG	UNDERGROUND GAS
UP	UTILITY POLE
UT	UNDERGROUND TELEPHONE
VCP	VITRIFIED CLAY PIPE
VERT.	VERTICAL
W	WIDE FLANGE/WIDE/WATT
W/	WITH
WF	WOOD FENCE
W/L	WATER LINE
W.L.	WATER LEVEL
W/M	WATER MAIN
W.M.	WATER METER
WRF	WATER RECLAMATION FACILITY
W.P.	WEATHER PROOF
W.S.	WALL SLEEVE/WATER STOP/WATER SERVICE
W/T	WALL TIE
WTR.	WATER

FLOW ABBREVIATIONS

AL	ALUM SOLUTION
AB	AERATION BASIN
AD	AEROBIC DIGESTER
AX	ANOXIC BASIN
BA	BLOWER AIR
BP	BYPASS
BW	BACKWASH
CA	COMPRESSED AIR
CCC	CHLORINE CONTACT CHAMBER
CCE	CHLORINATED EFFLUENT
CF	CLOTH FILTER
CLE	CLARIFIER EFFLUENT
CLG	CHLORINE GAS
CLS/CL2S	CHLORINE SOLUTION
D/DR	DRAIN
DAF	DISSOLVED AIR FLOTATION
DF	NEW CLOTH FILTER
DS	DEWATERED SLUDGE
EFF	EFFLUENT
EXP	EXPANSION
FBW	FILTER BACKWASH
FC	FINAL CLARIFIER
FE	FILTER EFFLUENT
FLE	FILTERED LAKE EFFLUENT
FLW	FLOCCULATED WATER
FM	FLOW METER
FW	FILTERED WATER
GBT	GRAVITY BELT THICKENER
GR	GRIT
HDW	HEADWORKS
INF	INFLUENT
IR	INTERNAL RECYCLE
HSBFP	HIGH SOLIDS BELT FITER PRESS
ML	MIXED LIQUOR
NRCY	NITROGEN RECYCLE
OF	OVERFLOW
P	POLYMER
PD	PLANT DRAIN
PDFM	PLANT DRAIN FORCE MAIN
PS	PUMP STATION
PW	POTABLE WATER
RAS	RETURNED ACTIVATED SLUDGE
RCW	RECLAIMED WATER
REJ	REJECT
RJ	REJECT
RML	RECIRCULATED MIXED LIQUOR
RS	RAW SEWAGE
RW	REUSE WATER
SAM	SAMPLE
SB	SPLITTER BOX
SC	SCUM
SDR	STORMWATER DRAINAGE
SE	SECONDARY EFFLUENT
SL	SAMPLE LINE
SN	SUPERNATANT
SPW	STORAGE POND WATER
SRS	STORED RAW SEWAGE
SS	SANITARY SEWER
TS	THICKENED SLUDGE
WAS	WASTE ACTIVATED SLUDGE
WBW	WASTE BACKWASH WATER
WW	WASTEWATER

PIPING ABBREVIATIONS

ARV	AIR RELEASE VALVE
ABD	ABANDONED
BP	BYPASS
BFV	BUTTERFLY VALVE
BV	BALL VALVE
CB	CATCH BASIN
CL2	CHLORINE
CO	CLEANOUT
CORP	CORPORATION
CV	CHECK VALVE
D	DRAIN
D.I.	DUCTILE IRON
DIA	DIAMETER
D.I.P.	DUCTILE IRON PIPE
DR	PLANT DRAIN FORCE MAIN
ELEC.	ELECTRICAL
EXIST.	EXISTING
FHA	FIRE HYDRANT ASSEMBLY
FL	FLANGED
GS	GALVANIZED STEEL
GV	GATE VALVE
HB	HOSE BIBB
HDPE	HIGH DENSITY POLYETHYLENE
MH	MANHOLE
MJ	MECHANICAL JOINT
NRCY	NITROGEN RECYCLE
PE	PLAIN END
PS	PUMP STATION
PV	PLUG VALVE
PVC	POLYVINYLCHLORIDE
PW	POTABLE WATER
RAS	RETURN ACTIVATED SLUDGE
RCW	RECLAIMED WATER
RED.	REDUCER
SCH	SCHECULE
SDR.	DIAMETER RATIO
SHC	SODIUM HYPOCHLORITE
SS.	STAINLESS STEEL
SS	SANITARY SEWER
TBR	TO BE REMOVED
UE	UNDERGROUND ELECTRIC
VERT.	VERTICAL
WM	WATER METER

LEGEND

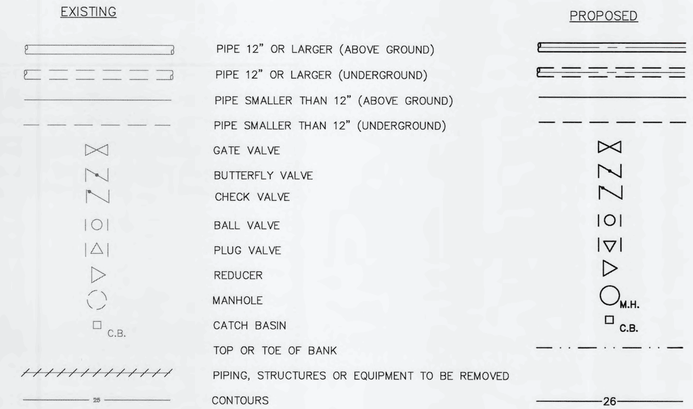

PIPE IDENTIFICATION

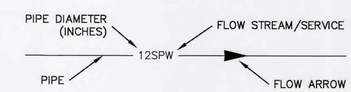

SECTION DESIGNATION

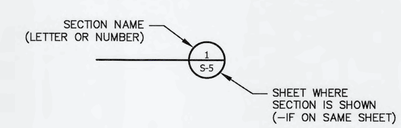

REV.NO.	DESCRIPTIONS	DATE

REVISIONS

ANTHONY L. PEVEC LICENSE No.66706 STATE OF FLORIDA PROFESSIONAL ENGINEER

ANTHONY L. PEVEC, P.E.
No. 66706

SEAL

McKIM&CREED
1365 Hamlet Avenue
Clearwater, Florida 33756
Phone: (727)442-7196, Fax: (727)461-3827
CA LIC No. 29588
www.mckimcreed.com

Manatee County FLORIDA

SWWRF
CCC REHAB AND
RECHARGE WELL PS PROJECT

SYMBOLS AND ABBREVIATIONS

DATE:	SEPTEMBER, 2019
MCE PROJ. #	1024-0171
DRAWN	CN
DESIGNED	TP
CHECKED	JV
PROJ. MGR.	TP

SCALE
HORIZONTAL: NA
VERTICAL: NA

DRAWING NUMBER
G-04

STATUS: ISSUED FOR BID
REVISION

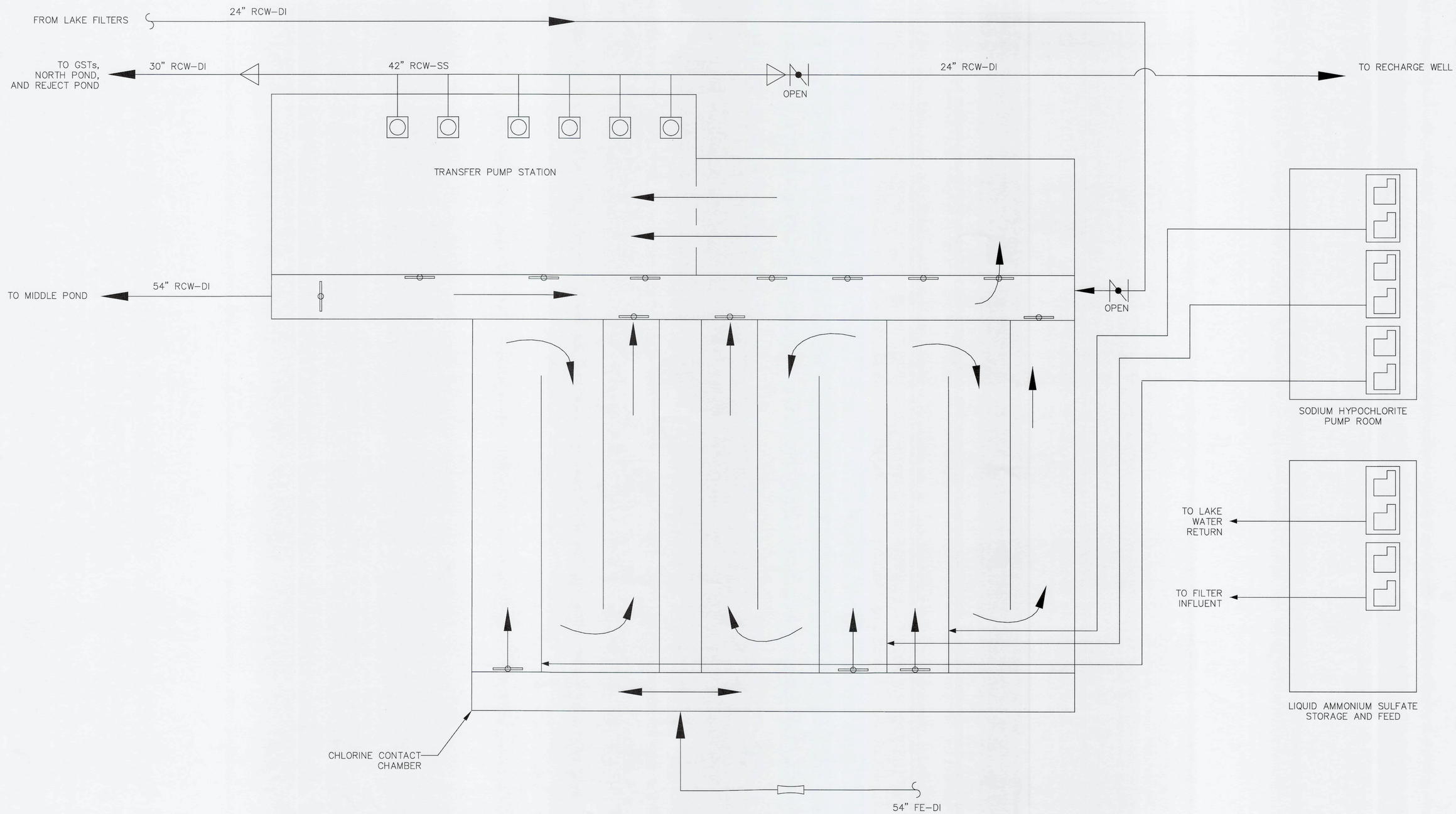

REV.NO.	DESCRIPTIONS	DATE
	REVISIONS	

ANTHONY L. PEVEC, P.E.
No. 66706

SEAL

McKIM&CREED
1365 Hamlet Avenue
Clearwater, Florida 33756
Phone: (727)442-7196, Fax: (727)461-3827
CA LIC No. 29588
www.mckimcreed.com

Manatee County FLORIDA

SWWRF
CCC REHAB AND
RECHARGE WELL PS PROJECT

EXISTING CCC AND EFFLUENT
PROCESS FLOW DIAGRAM

DATE:	SEPTEMBER, 2019
MCE PROJ. #	1024-0171
DRAWN	CN
DESIGNED	TP
CHECKED	JV
PROJ. MGR.	TP

SCALE
HORIZONTAL: NA
VERTICAL: NA

DRAWING NUMBER
G-05

STATUS:
ISSUED FOR BID

REVISION

S:\1024\0171\SD-Drawings\GENERAL\G05-1024G171.dwg, 9/16/2019 3:42:29 PM, Carlos Nejarro

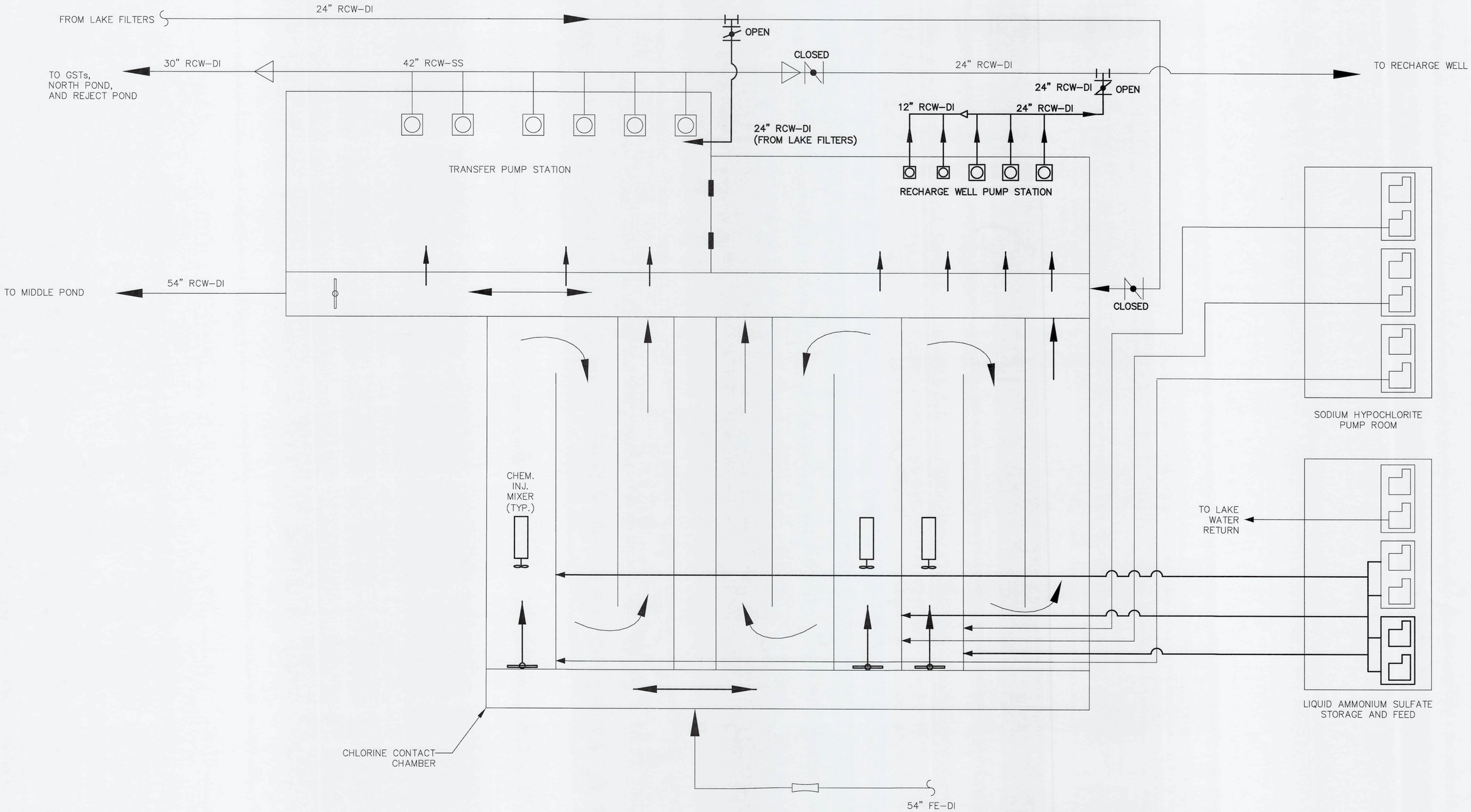

REV.NO.	DESCRIPTIONS	DATE
	REVISIONS	

ANTHONY L. PEVEC, P.E.
No. 66706

SEAL

McKIM&CREED
1365 Hamlet Avenue
Clearwater, Florida 33756
Phone: (727)442-7196, Fax: (727)461-3827
CA LIC No. 29588
www.mckimcreed.com

Manatee County FLORIDA

SWWRF CCC REHAB AND RECHARGE WELL PS PROJECT

PROPOSED CCC AND EFFLUENT PROCESS FLOW DIAGRAM

DATE:	SEPTEMBER, 2019
MCE PROJ. #	1024-0171
DRAWN	CN
DESIGNED	TP
CHECKED	JV
PROJ. MGR.	TP

SCALE
HORIZONTAL: NA
VERTICAL: NA

DRAWING NUMBER
G-06

STATUS: ISSUED FOR BID
REVISION

S:\1024\0171\00-Drawings\GENERAL\G06-1024017I.dwg, 9/16/2019 3:42:37 PM, Carlos Nájarro

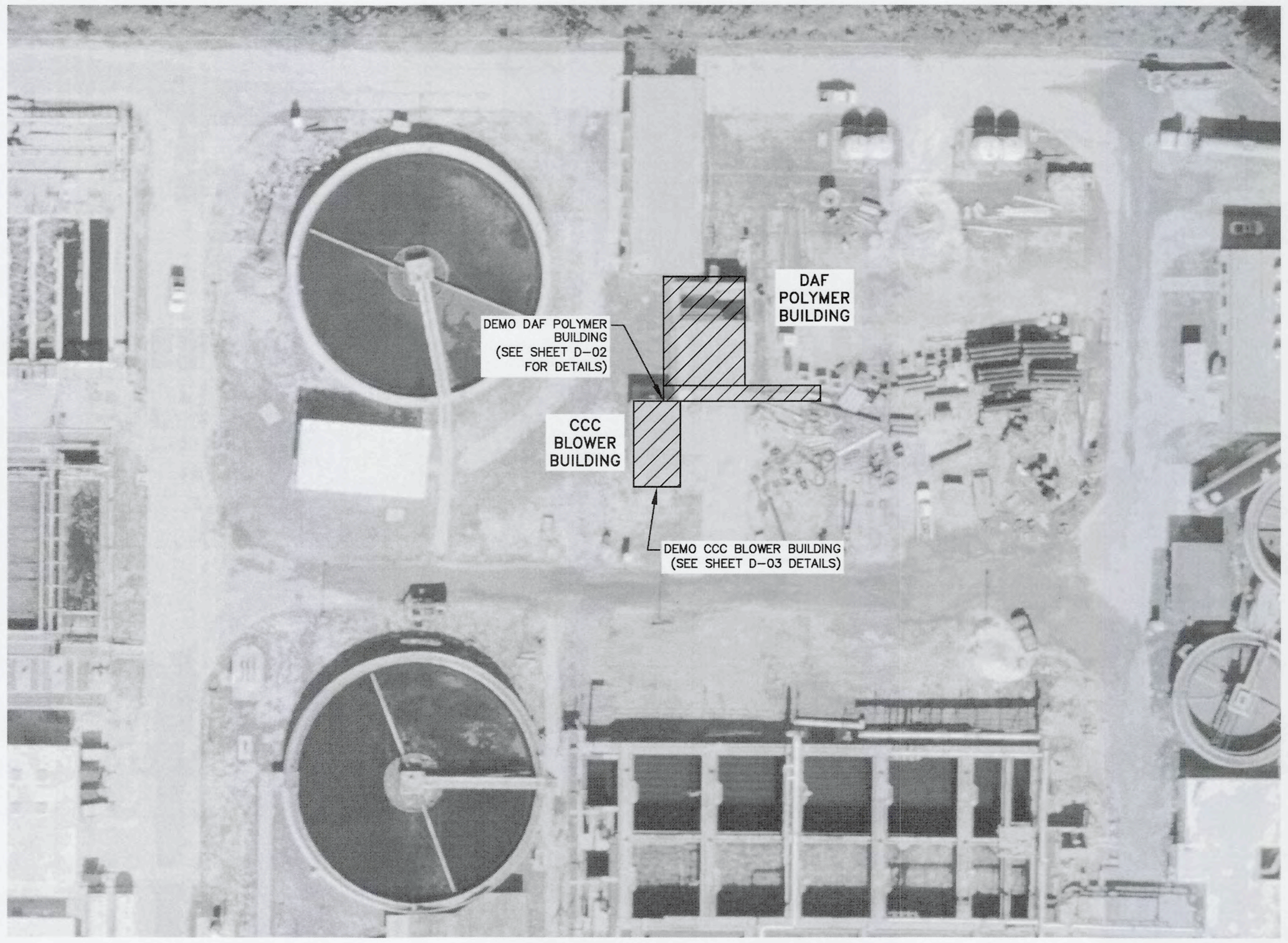

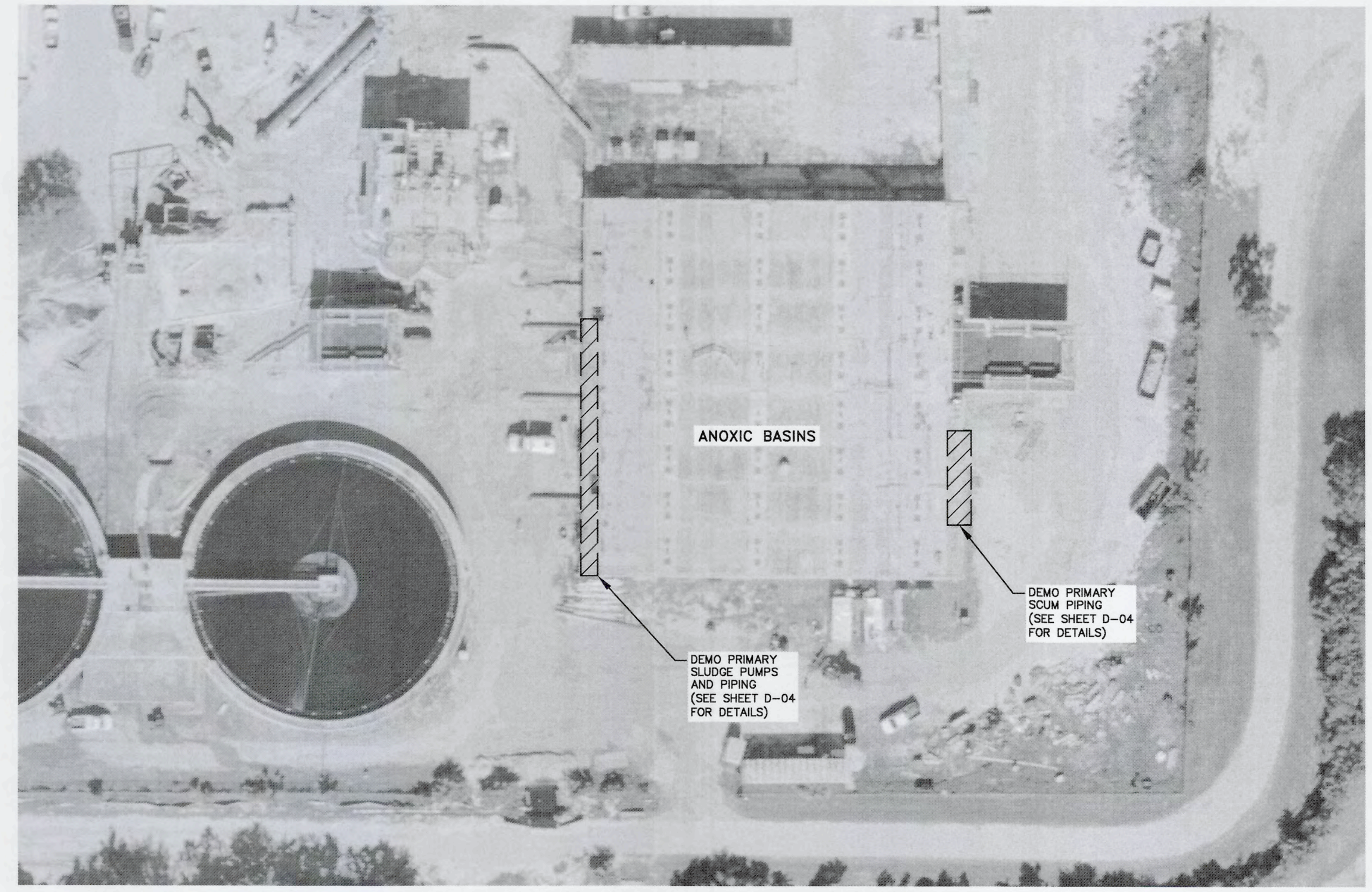

0 20 40 80 Feet
1:480

NOTE:

1. AREAS TO BE SODDED AFTER DEMOLITION.

SITE PLAN
SCALE: 1" = 40'

REV.NO.	DESCRIPTIONS	DATE

REVISIONS

ANTHONY L. PEVEC, P.E.
No. 66706

SEAL

McKIM&CREED
1365 Hamlet Avenue
Clearwater, Florida 33756
Phone: (727)442-7196, Fax: (727)461-3827
CA LIC No. 29588
www.mckimcreed.com

Manatee County FLORIDA

SWWRF
CCC REHAB AND RECHARGE WELL PS PROJECT

DEMOLITION SITE PLAN

DATE:	SEPTEMBER, 2019
MCE PROJ. #	1024-0171
DRAWN	CN
DESIGNED	TP
CHECKED	JV
PROJ. MGR.	TP

SCALE
HORIZONTAL: NA
VERTICAL: NA

DRAWING NUMBER
D-01

STATUS: ISSUED FOR BID
REVISION

S:\1024\0171\80-Drawings\DEMO\D-01 10240171.dwg, 9/16/2019 3:42:51 PM, Carlos Najarro

SOUTH ELEVATION

NORTH ELEVATION

EAST ELEVATION

WEST ELEVATION

NOTES:

1. CONTRACTOR SHALL DEMOLISH DAF POLYMER BUILDING AND BLOCK ENCLOSURE TO ITS ENTIRETY. DEMOLITION INCLUDES ALL SLABS, WALLS, ROOF, EQUIPMENT, PIPING ELECTRICAL.
2. FOR ELECTRICAL FEEDS FROM OTHER BUILDINGS, REMOVE FEED WIRING FROM ITS SOURCE. SEE ELECTRICAL DRAWINGS AND SPECIFICATIONS FOR ADDITIONAL INFORMATION, ON DEMOLITION OF CONDUITS AND WIRING.
3. ALL PVC LINES WITHIN BUILDING'S FOOTPRINT SHALL BE CUT 1-FT. BELOW FINISHED GRADE AND CAPPED.
4. SEE INSTRUMENTATION DRAWINGS AND SPECIFICATIONS FOR DEMOLITION WORK RELATED TO PANEL SP-2.

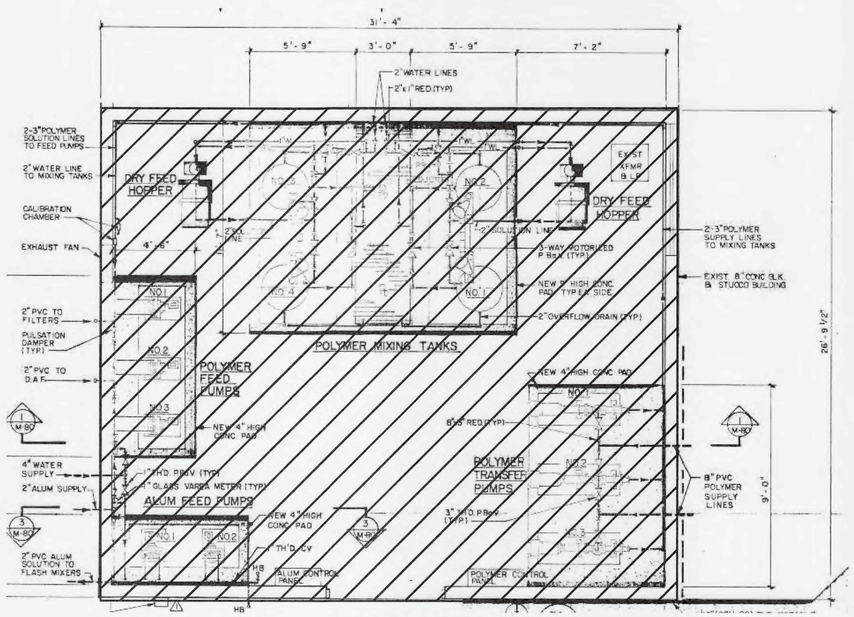

PLAN VIEW

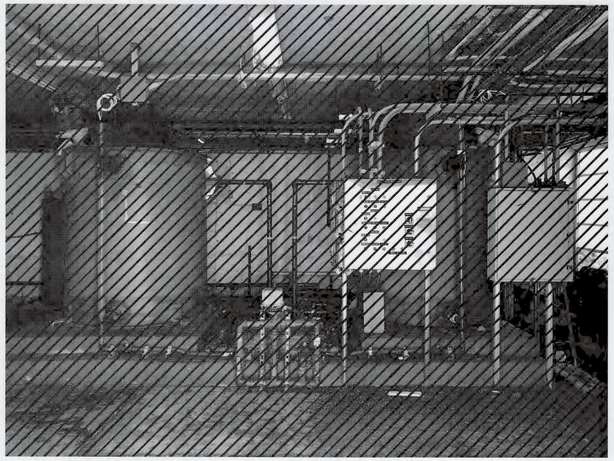

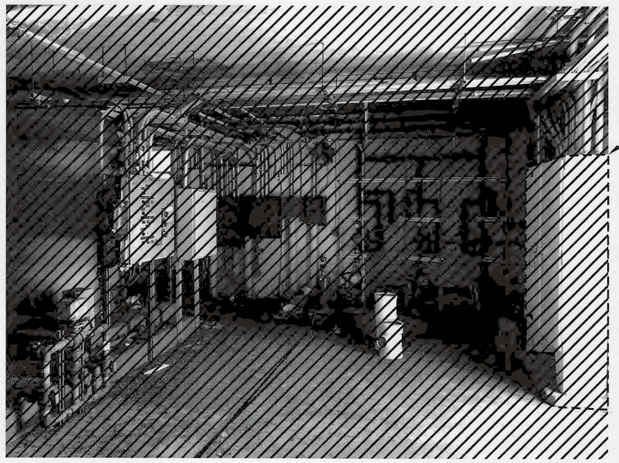

PANEL SP-2
SEE NOTE 4

REV.NO.	DESCRIPTIONS	DATE

REVISIONS

ANTHONY L. PEVEC, P.E.
No. 66706

SEAL

McKIM&CREED
1365 Hamlet Avenue
Clearwater, Florida 33756
Phone: (727)442-7196, Fax: (727)461-3827
CA LIC No. 29588
www.mckimcreed.com

Manatee County FLORIDA

SWWRF
CCC REHAB AND
RECHARGE WELL PS PROJECT

DAF POLYMER BUILDING - DEMOLITION

DATE:	SEPTEMBER, 2019
MCE PROJ. #	1024-0171
DRAWN	CN
DESIGNED	TP
CHECKED	JV
PROJ. MGR.	TP

SCALE
HORIZONTAL: NA
VERTICAL: NA

DRAWING NUMBER
D-02

STATUS: ISSUED FOR BID
REVISION

S:\1024\0171\90-Drawings\DEMO\D-02 1024017l.dwg, 9/16/2019 3:43:03 PM, Carlos Najera

SOUTH ELEVATION

SEE NOTE 6.

NORTH ELEVATION

EAST ELEVATION

WEST ELEVATION

DEMO 40'Lx26'Wx12'H
CMU STRUCTURE (TYP.)

DEMO CCC
BLOWER BUILDING

NOTES:

1. CONTRACTOR SHALL DEMOLISH CCC BLOWER BUILDING AND BLOCK ENCLOSURE TO ITS ENTIRETY. DEMOLITION INCLUDES ALL SLABS, WALLS, ROOF, EQUIPMENT, PIPING ELECTRICAL.
2. FOR ELECTRICAL FEEDS FROM OTHER BUILDINGS, REMOVE FEED WIRING FROM ITS SOURCE. SEE ELECTRICAL DRAWINGS AND SPECIFICATIONS FOR ADDITIONAL INFORMATION, ON DEMOLITION OF CONDUITS AND WIRING.
3. ALL PVC LINES WITHIN BUILDING'S FOOTPRINT SHALL BE CUT 1-FT. BELOW FINISHED GRADE AND CAPPED.
4. SEE INSTRUMENTATION DRAWINGS AND SPECIFICATIONS FOR DEMOLITION WORK RELATED TO PANEL SP-2.
5. CONTRACTOR SHALL MOVE PORTABLE COMPRESSORS ON SITE BEFORE COMMENCING WITH DEMOLITION WORK. COORDINATE LOCATION WITH OWNER.
6. REMOVE 12" DI AIR LINE. CUT TO 2-FT BELOW FINISHED GRADE AND GROUT FILL (1.5 CY GROUT).

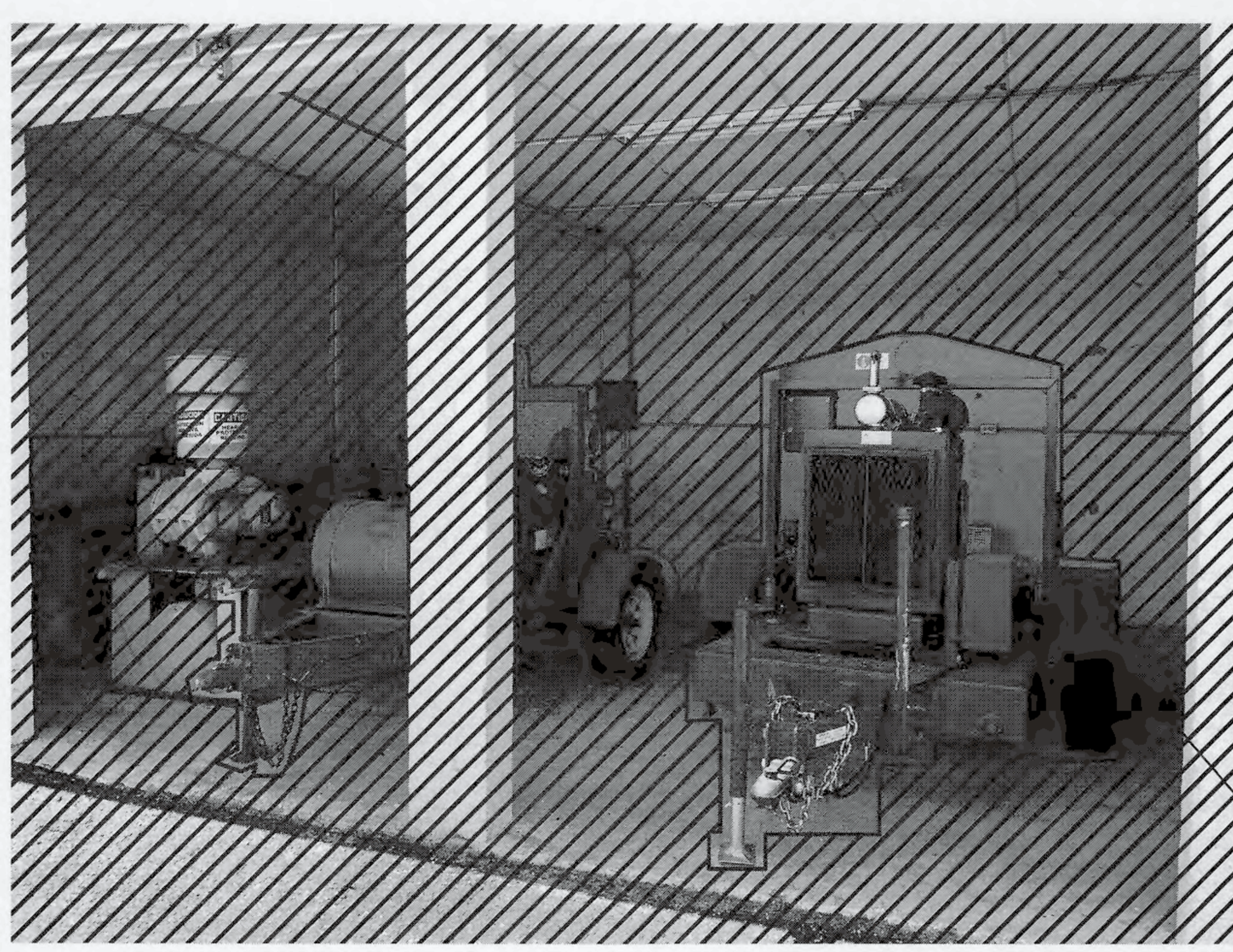

PORTABLE
COMPRESSORS
SEE NOTE 5.

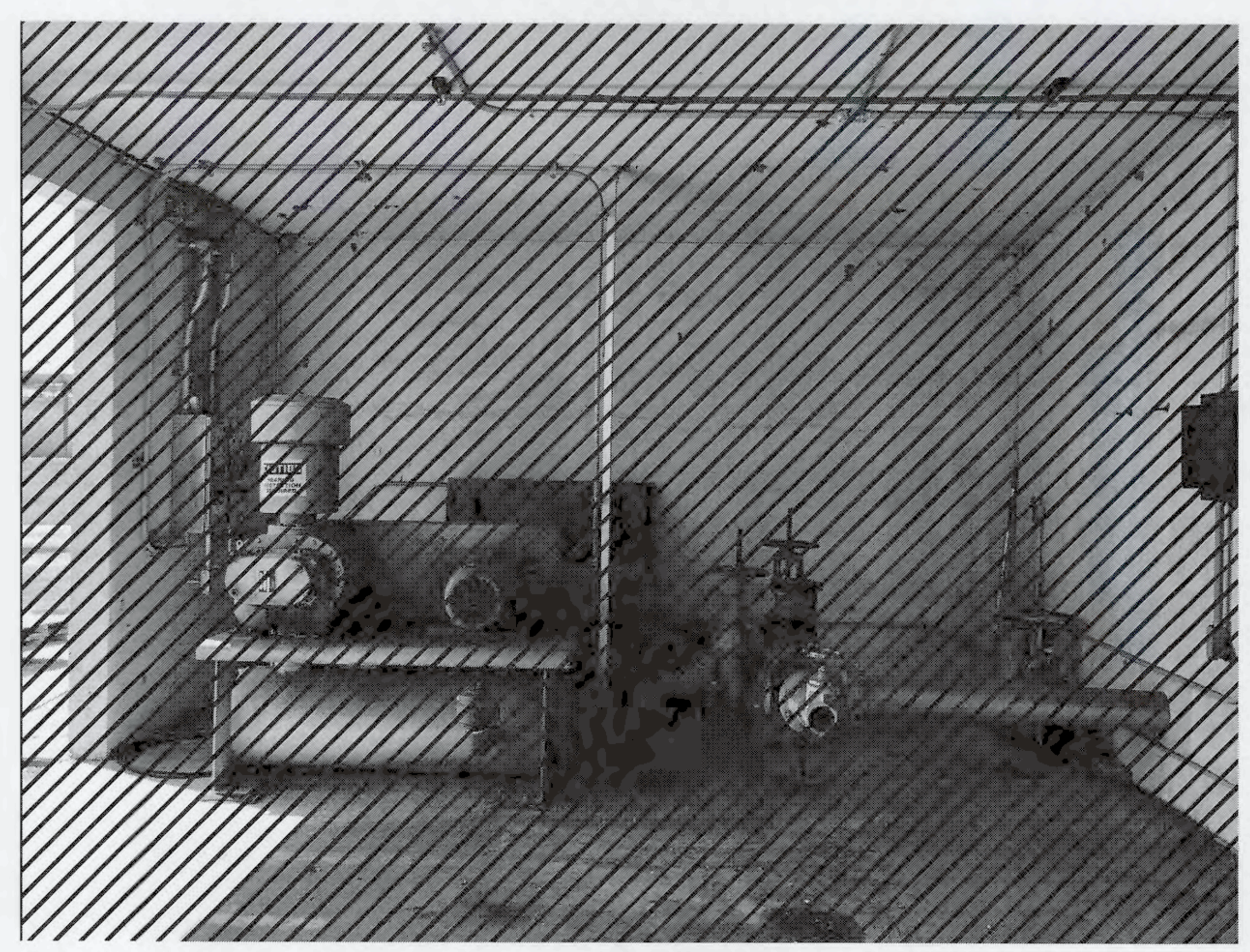

PORTABLE
COMPRESSORS
SEE NOTE 5.

REV.NO.	DESCRIPTIONS	DATE

REVISIONS

ANTHONY L. FEVEC, P.E.
No. 66706

SEAL

MCKIM&CREED
1365 Hamlet Avenue
Clearwater, Florida 33756
Phone: (727)442-7196, Fax: (727)461-3827
CA LIC No. 29588
www.mckimcreed.com

Manatee County FLORIDA

SWWRF
CCC REHAB AND
RECHARGE WELL PS PROJECT

CCC BLOWER BUILDING DEMOLITION

DATE:	SEPTEMBER, 2019
MCE PROJ. #	1024-0171
DRAWN	CN
DESIGNED	TP
CHECKED	JV
PROJ. MGR.	TP

SCALE
HORIZONTAL: NA
VERTICAL: NA

DRAWING NUMBER
D-03

STATUS: ISSUED FOR BID

REVISION

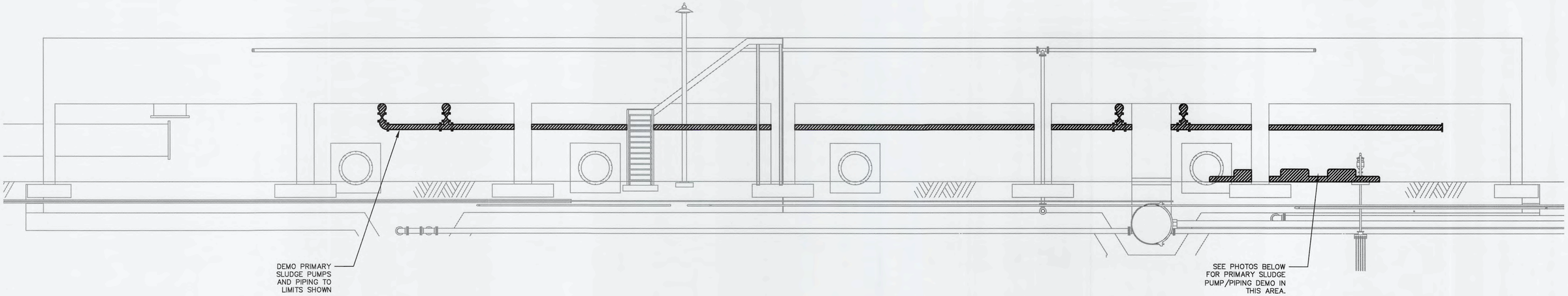

PRIMARY SLUDGE PUMPING ELEVATION

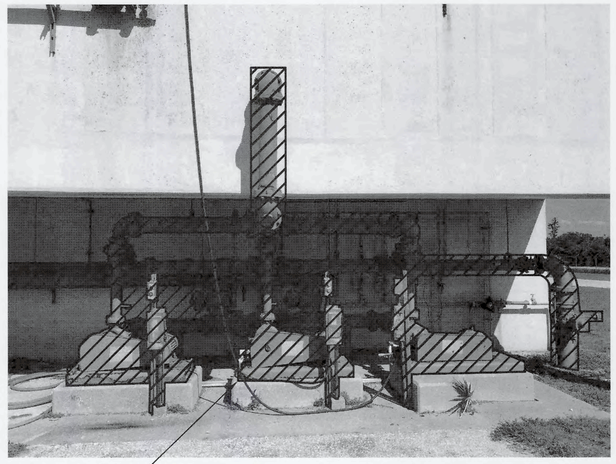

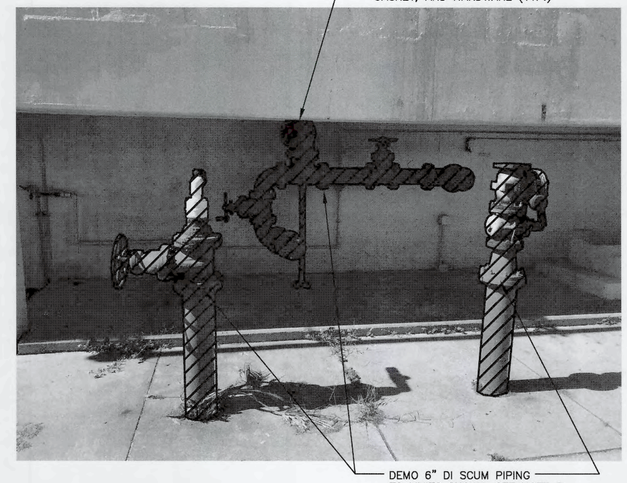

PRIMARY SCUM PIPING (EAST END ANOXIC BASINS)

NOTES:

1. CONTRACTOR SHALL PROVIDE BLIND FLANGES, GASKETS, NUTS, BOLTS FOR EACH ABANDONED TANK PENETRATION. THERE ARE A TOTAL OF (8) 6" PIPE PENETRATIONS AND (1) 8-INCH PIPE.
2. FOR ELECTRICAL FEEDS FROM OTHER BUILDINGS, REMOVE FEED WIRING FROM ITS SOURCE. SEE ELECTRICAL DRAWINGS AND SPECIFICATIONS FOR ADDITIONAL INFORMATION, ON DEMOLITION OF CONDUITS AND WIRING.
3. PIPING IN GRASS SHALL BE CUT 2-FT BELOW GRADE AND CAPPED. PIPING IN CONCRETE SHALL BE CUT JUST BELOW CONCRETE AND FILLED WITH NON-SHRINK GROUT FLUSH WITH WALK/SLAB.

REV.NO.	DESCRIPTIONS	DATE

REVISIONS

ANTHONY L. PEVEC, P.E. No. 66706

SEAL

McKIM&CREED
1365 Hamlet Avenue
Clearwater, Florida 33756
Phone: (727)442-7196, Fax: (727)461-3827
CA LIC No. 29588
www.mckimcreed.com

Manatee County FLORIDA

SWWRF
CCC REHAB AND
RECHARGE WELL PS PROJECT

PRIMARY SLUDGE PUMPING AND PIPING AND SCUM PIPING - DEMOLITION

DATE:	SEPTEMBER, 2019
MCE PROJ. #	1024-0171
DRAWN	CN
DESIGNED	TP
CHECKED	JV
PROJ. MGR.	TP

SCALE
HORIZONTAL: NA
VERTICAL: NA

DRAWING NUMBER
D-04

STATUS: ISSUED FOR BID

REVISION

S:\1024\0171\00-Drawings\DEMO\D-04 1024017L.dwg, 9/19/2019 3:43:28 PM, Carlos Nojiro

0 25 50 100 Meters
1:50

SITE PLAN
SCALE: 1" = 50'

REV.NO.	DESCRIPTIONS	DATE

REVISIONS

ANTHONY L. PEVEC
LICENSE
No. 66706
STATE OF FLORIDA
PROFESSIONAL ENGINEER

ANTHONY L. PEVEC, P.E.
No. 66706

SEAL

McKIM&CREED
1365 Hamlet Avenue
Clearwater, Florida 33756
Phone: (727)442-7196, Fax: (727)461-3827
CA LIC No. 29588
www.mckimcreed.com

Manatee County FLORIDA

SWWRF
CCC REHAB AND
RECHARGE WELL PS PROJECT

SITE PLAN

DATE:	SEPTEMBER, 2019
MCE PROJ. #	1024-0171
DRAWN	CN
DESIGNED	TP
CHECKED	JV
PROJ. MGR.	TP

SCALE
HORIZONTAL: NA
VERTICAL: NA

DRAWING NUMBER
C-01

STATUS: ISSUED FOR BID
REVISION

S:\1024\0171\90-Drawings\CIVIL\C-01 1024017I.dwg, 9/16/2019 3:43:44 PM, Carlos Najarro

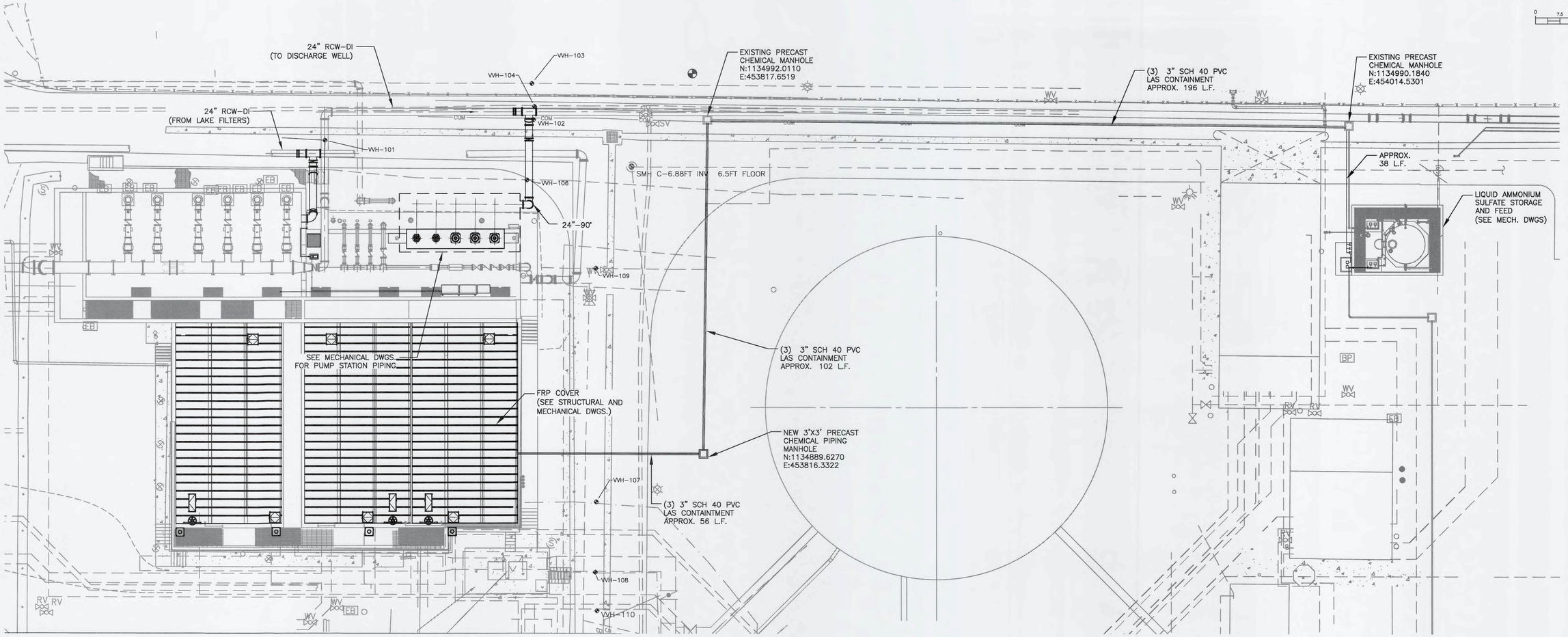

TEST HOLE NUMBER	NORTHING	EASTING	GROUND ELEVATION	DEPTH/COVER	TYPE	SIZE	MATERIAL	NOTE
MH	1134977.70	453794.32	16.15					PIPE INVERT 6.88'
VVH-101	1134985.75	453700.31	16.04	3.82'	RCW	24"	ST	
VVH-102	1134991.98	453764.32	15.98	1.96'	COMM	2"	PVC	
VVH-103	1135003.06	453763.81	15.61	2.66'	WL	6"	PVC	
VVH-104	1134996.01	453764.63	15.91	3.68'	RCW	24"	DI	
VVH-105								NO UTILITY FOUND
VVH-106	1134973.49	453762.29	17.17	2.70'	SAMPLE	3"	PVC	
VVH-107	1134874.87	453783.47	16.60	2.36'	SHC	4"	PVC	
VVH-108	1134853.46	453783.16	16.43	4.00'	FE	54"	ST	
VVH-109	1134946.35	453783.42	16.29	2.34'	RCW	10"	ST	
VVH-110	1134841.60	453783.65	16.44	2.20'	UNK	8"	ST	

ENLARGED SITE PLAN
SCALE: 1" = 15'

REV.NO.	DESCRIPTIONS	DATE

REVISIONS

ANTHONY L. PEVEC, P.E.
No. 66706

SEAL

McKIM&CREED
1365 Hamlet Avenue
Clearwater, Florida 33756
Phone: (727)442-7196, Fax: (727)461-3827
CA LIC No. 29588
www.mckimcreed.com

Manatee County FLORIDA

SWWRF
CCC REHAB AND
RECHARGE WELL PS PROJECT

YARD PIPING PLAN

DATE:	SEPTEMBER, 2019
MCE PROJ. #	1024-0171
DRAWN	CN
DESIGNED	TP
CHECKED	JV
PROJ. MGR.	TP

SCALE
HORIZONTAL: NA
VERTICAL: NA

DRAWING NUMBER
C-02

STATUS: ISSUED FOR BID
REVISION

S:\1024\0171\90-Drawings\CIVIL\C-02 1024017T.dwg, 9/16/2019 3:44:07 PM, Carlos Nojarro

PARTIAL SITE PLAN
SCALE: 1" = 5'

NOTES:

1. CONTRACTOR SHALL TEMPORARILY REMOVE ACCESS STAIRS AND PROVIDE NEW LANDING PAD AT COMPLETION OF PIPING WORK IN THIS AREA.
2. CONTRACTOR SHALL TEMPORARILY REMOVE TEST STATION PAD AND WIRING AND RE-INSTALL AT COMPLETION OF PIPING WORK IN THIS AREA.

REV.NO.	DESCRIPTIONS	DATE
	REVISIONS	

ANTHONY L. PEVEC, P.E.
No. 66706

SEAL

McKIM & CREED
1365 Hamlet Avenue
Clearwater, Florida 33756
Phone: (727)442–7196, Fax: (727)461–3827
CA LIC No. 29588
www.mckimcreed.com

Manatee County
FLORIDA

SWWRF
CCC REHAB AND
RECHARGE WELL PS PROJECT

YARD PIPING PLAN-CCC

DATE:	SEPTEMBER, 2019
MCE PROJ. #	1024–0171
DRAWN	CN
DESIGNED	TP
CHECKED	JV
PROJ. MGR.	TP

SCALE
HORIZONTAL: NA
VERTICAL: NA

DRAWING NUMBER
C-03

STATUS: ISSUED FOR BID
REVISION

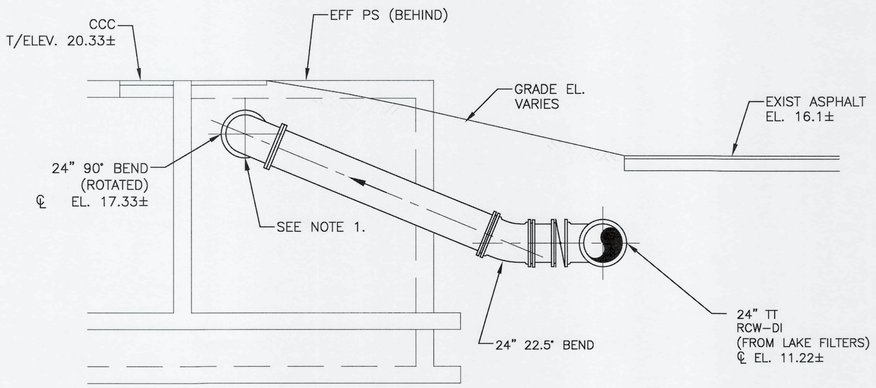

NOTES:

1. SEE MECHANICAL DRAWINGS FOR SAMPLE TAP AND PIPING DETAILS

SECTION 1 C-03
SCALE: 1/4" =1'-0"

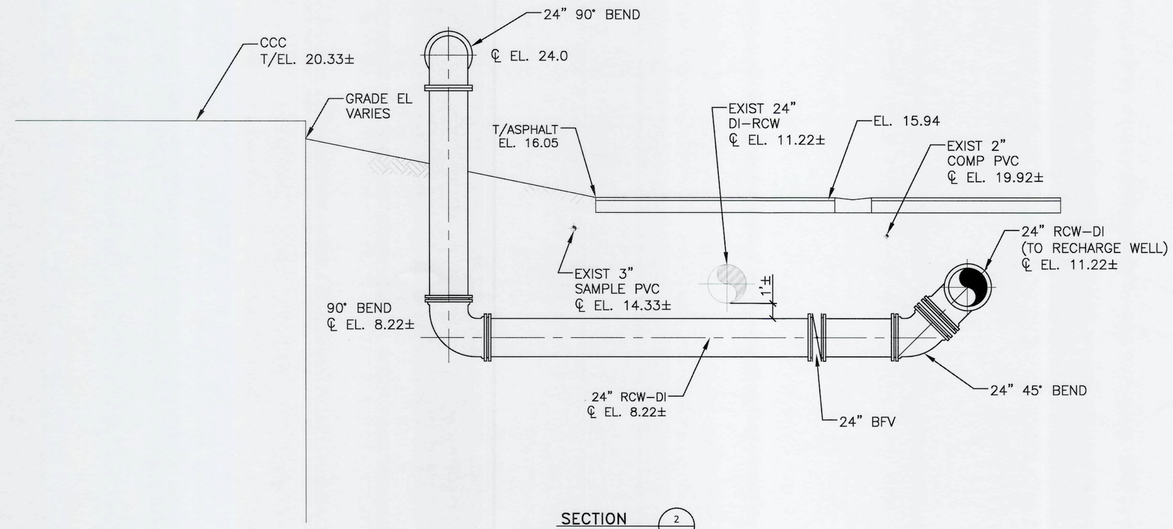

SECTION 2 C-03
SCALE: 1/4" =1'-0"

REV.NO.	DESCRIPTIONS	DATE

REVISIONS

ANTHONY L. PEVEC, P.E.
No. 66706

SEAL

McKIM&CREED
1365 Hamlet Avenue
Clearwater, Florida 33756
Phone: (727)442-7196, Fax: (727)461-3827
CA LIC No. 29588
www.mckimcreed.com

Manatee County FLORIDA

SWWRF
CCC REHAB AND
RECHARGE WELL PS PROJECT

YARD PIPING SECTIONS

DATE:	SEPTEMBER, 2019
MCE PROJ. #	1024-0171
DRAWN	CN
DESIGNED	TP
CHECKED	JV
PROJ. MGR.	TP

SCALE
HORIZONTAL: NA
VERTICAL: NA

DRAWING NUMBER
C-04

STATUS:
REVISION
ISSUED FOR BID

S:\1024\0171\90-Drawings\CIVIL\C-04 1024\0171.dwg, 9/16/2019 3:44:31 PM, Carlos Nogiera

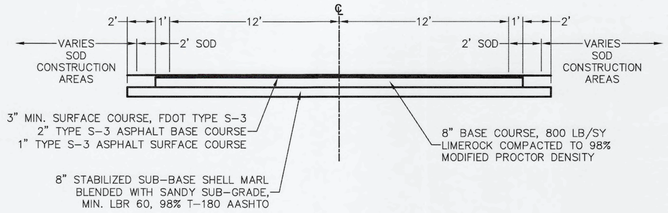

INTERIOR PLANT ROADWAY TYPICAL SECTION

NOT TO SCALE

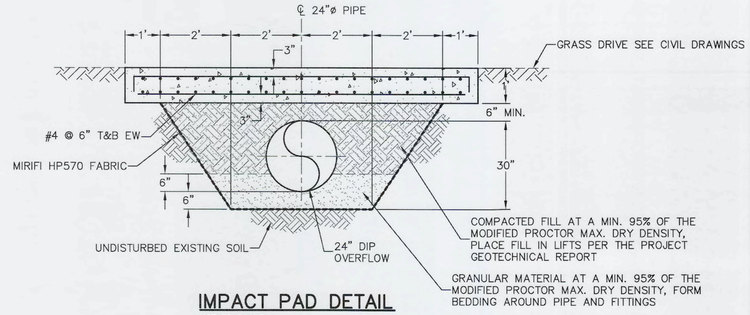

IMPACT PAD DETAIL

NOT TO SCALE

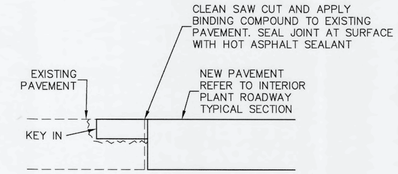

ASPHALT CONNECTION

NOT TO SCALE

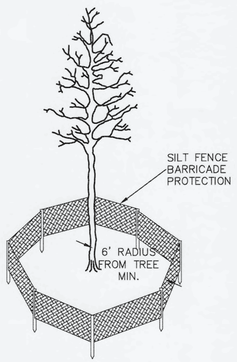

TREE PROTECTION DETAIL

NOT TO SCALE

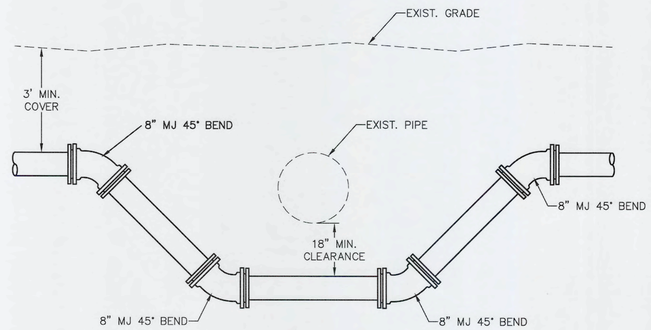

UTILITY CROSSING DETAIL

NOT TO SCALE

NOTE:
1. REDUCED CROSSING CLEARANCES MAY BE APPROVED BY ENGINEER.

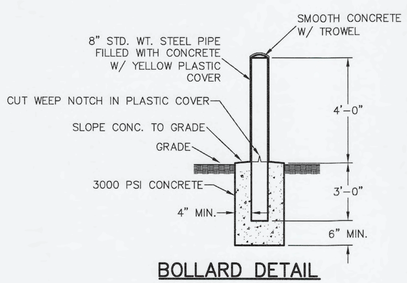

BOLLARD DETAIL

NOT TO SCALE

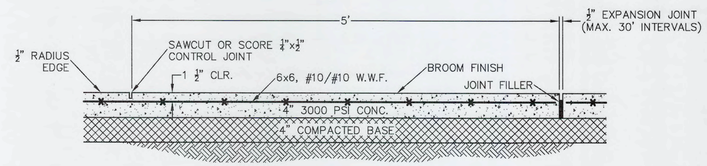

TYPICAL SIDEWALK DETAIL

NOT TO SCALE

REV.NO.	DESCRIPTIONS	DATE

REVISIONS

ANTHONY L. PEVEC LICENSE No.66706 STATE OF FLORIDA PROFESSIONAL ENGINEER

ANTHONY L. PEVEC, P.E.
No. 66706

SEAL

McKIM&CREED
1365 Hamlet Avenue
Clearwater, Florida 33756
Phone: (727)442-7196, Fax: (727)461-3827
CA LIC No. 29588
www.mckimcreed.com

Manatee County FLORIDA

SWWRF
CCC REHAB AND
RECHARGE WELL PS PROJECT

CIVIL DETAILS

DATE:	SEPTEMBER, 2019
MCE PROJ. #	1024-0171
DRAWN	CN
DESIGNED	TP
CHECKED	JV
PROJ. MGR.	TP

SCALE
HORIZONTAL: NA
VERTICAL: NA

DRAWING NUMBER
C-05

STATUS: ISSUED FOR BID

REVISION

S:\1024\0171\80-Drawings\CIVIL\C-05_C-08 1024017.dwg, 9/16/2019 3:44:42 PM, Carlos Nojarro

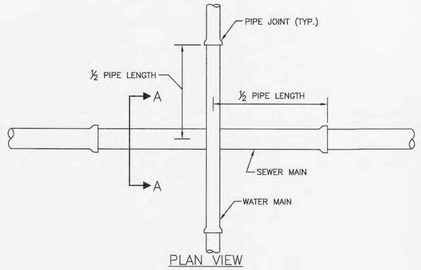

PLAN VIEW

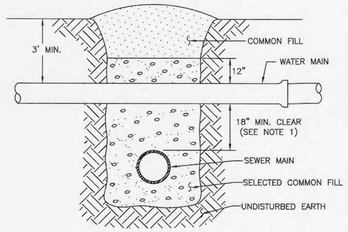

SECTION A–A

NOTES:

1. CLEARANCE MAY BE REDUCED TO 6" FOR GRAVITY SEWER WHERE WATER MAIN IS DUCTILE IRON OR 3" FOR FORCE MAIN WHERE FORCE MAIN IS ENCASED A MINIMUM OF 10' EACH SIDE OF CROSSING.
2. WHERE NO ENCASEMENT IS REQUIRED, PIPE SECTIONS SHALL BE FULL–LENGTH AND SHALL BE ADJUSTED HORIZONTALLY SO THAT THE CROSSING IS AT EACH PIPE SECTION'S MIDPOINT REGARDLESS OF THE VERTICAL CLEARANCE.
3. REFER TO THE JACK & BORE CROSSING DETAIL FOR CASING AND SPACER REQUIREMENTS.

MANATEE COUNTY PUBLIC WORKS DEPARTMENT			TYPICAL NEW WATER & SEWER LINE CROSSING	UG–2
REV.BY	DATE	MAY 10, 2011 DATE OF APPROVAL		PAGE 102
CLB/BR	11/10			

REQUIRED LENGTH OF RESTRAINED JOINT PIPE FOR DIP (POLY-WRAPPED)

MAIN PIPE SIZE	HORIZ. BENDS 90°	HORIZ. BENDS 45°	HORIZ. BENDS 22.5°	TEES SIZE / LENGTH							REDUCERS SIZE / LENGTH							PLUGS & VALVES
36	142	59	28	X36 / 393	X30 / 318	X24 / 232	X20 / 169	X16 / 84	X12 / 1		X30 / 137	X24 / 247	X20 / 308	X16 / 359				453
30	124	51	25	X30 / 333	X24 / 252	X20 / 189	X16 / 115	X12 / 23	X10 / 1		X24 / 137	X20 / 213	X16 / 276					391
24	106	44	21	X24 / 270	X20 / 211	X16 / 143	X12 / 91	X10 / 10	X8 / 1		X20 / 98	X16 / 178	X12 / 241					327
20	92	38	18	X20 / 225	X16 / 161	X12 / 85	X10 / 39	X8 / 1			X16 / 98	X12 / 176	X10 / 227					280
16	77	32	15	X16 / 177	X12 / 107	X10 / 65	X8 / 19	X6 / 1			X12 / 98	X10 / 163	X8 / 169					231
12	61	25	12	X12 / 127	X10 / 89	X8 / 50	X6 / 1				X10 / 88	X8 / 98	X6 / 131					181
10	52	22	10	X10 / 101	X8 / 64	X6 / 11					X8 / 51	X6 / 94	X4 / 125					153
8	44	18	9	X8 / 78	X6 / 30	X4 / 1					X6 / 54	X4 / 92						128
6	34	14	7	X6 / 46	X4 / 1						X4 / 50							98
4	24	10	5	X4 / 19														69

REQUIRED LENGTH OF RESTRAINED JOINT PIPE FOR DIP (NON-WRAPPED)

MAIN PIPE SIZE	HORIZ. BENDS 90°	HORIZ. BENDS 45°	HORIZ. BENDS 22.5°	TEES SIZE / LENGTH							REDUCERS SIZE / LENGTH							PLUGS & VALVES
36	100	42	20	X36 / 163	X30 / 132	X24 / 96	X20 / 68	X16 / 35	X12 / 1		X30 / 57	X24 / 103	X20 / 128	X16 / 149				188
30	88	37	18	X30 / 135	X24 / 104	X20 / 78	X16 / 48	X12 / 10	X10 / 1		X24 / 57	X20 / 88	X16 / 114					162
24	75	31	15	X24 / 112	X20 / 87	X16 / 59	X12 / 25	X10 / 4	X8 / 1		X20 / 40	X16 / 74	X12 / 100					135
20	65	27	13	X20 / 93	X16 / 67	X12 / 35	X10 / 16	X8 / 1			X16 / 41	X12 / 73	X10 / 94					116
16	54	22	11	X16 / 73	X12 / 44	X10 / 27	X8 / 8	X6 / 1			X12 / 41	X10 / 68	X8 / 70					96
12	43	18	8	X12 / 53	X10 / 37	X8 / 21	X6 / 1				X10 / 37	X8 / 40	X6 / 54					75
10	37	15	7	X10 / 42	X8 / 26	X6 / 5					X8 / 21	X6 / 39	X4 / 52					63
8	30	13	6	X8 / 32	X6 / 12	X4 / 1					X6 / 22	X4 / 38						53
6	24	10	5	X6 / 19	X4 / 1						X4 / 21							41
4	17	7	3	X4 / 8														29

NOTE:

SEE RESTRAINED LENGTHS FOR PVC PIPE DETAIL FOR NOTES 1 THROUGH 8 THAT ARE ALSO APPLICABLE TO RESTRAINED LENGTHS FOR DIP.

MANATEE COUNTY PUBLIC WORKS DEPARTMENT			RESTRAINED LENGTHS FOR DIP	UG–9
REV.BY	DATE	MAY 10, 2011 DATE OF APPROVAL		PAGE 109
CLB/BR	11/10			

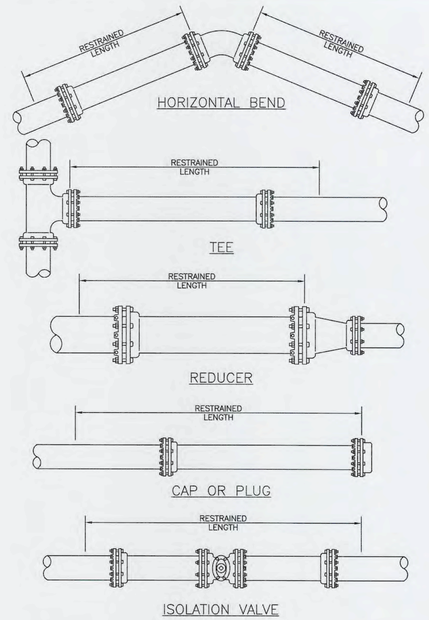

MANATEE COUNTY PUBLIC WORKS DEPARTMENT			RESTRAINED LENGTHS FOR PIPE	UG–10
REV.BY	DATE	MAY 10, 2011 DATE OF APPROVAL		PAGE 110
CLB/BR	11/10			

NOTES:

1. USE OF TYPE A–2 AND A–3 PIPE BEDDING TO BE DETERMINED IN THE FIELD BY THE ENGINEER.
2. PROVIDE ADEQUATE CLEARANCE TO PLACE AND COMPACT STAGE 1 BEDDING MATERIAL IN TRENCH AREA BELOW PIPE SPRINGLINE. PIPE EMBEDMENT MUST BE COMPACTED OUT TO THE TRENCH WALL OR 2.5 TIMES THE PIPE OD, WHICHEVER IS LESS.
3. TYPICALLY 4" TO 6".
4. PIPE INSTALLATION SHALL BE IN ACCORDANCE WITH THE MANUFACTURER'S WRITTEN INSTRUCTIONS.
5. TRACER WIRE NOT REQUIRED FOR GRAVITY SEWERS.

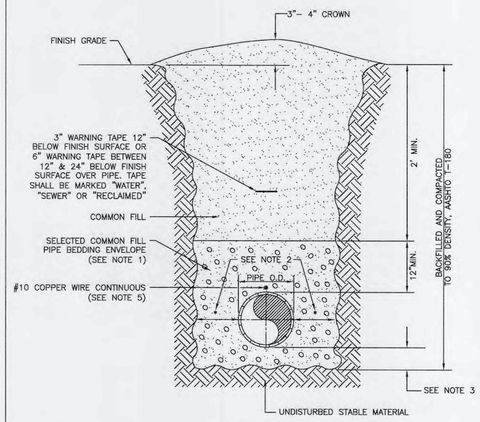

MANATEE COUNTY PUBLIC WORKS DEPARTMENT			TRENCH WITH UNIMPROVED SURFACE TYPE A–1 PIPE BEDDING	UG–11
REV.BY	DATE	MAY 10, 2011 DATE OF APPROVAL		PAGE 111
WRT/KE	03/11			

NOTES:

1. USE OF TYPE A–2 AND A–3 PIPE BEDDING TO BE DETERMINED IN THE FIELD BY THE ENGINEER.
2. PROVIDE ADEQUATE CLEARANCE TO PLACE AND COMPACT STAGE 1 BEDDING MATERIAL IN TRENCH AREA BELOW PIPE SPRINGLINE. PIPE EMBEDMENT MUST BE COMPACTED OUT TO THE TRENCH WALL OR 2.5 TIMES THE PIPE OD, WHICHEVER IS LESS.
3. TYPICALLY 4" TO 6".
4. PIPE INSTALLATION SHALL BE IN ACCORDANCE WITH THE MANUFACTURER'S WRITTEN INSTRUCTIONS.
5. TRACER WIRE NOT REQUIRED FOR GRAVITY SEWERS.
6. MILL 25' BACK FROM TRENCH SAW CUT. ADJUST MILLING PER INDIVIDUAL SITE TO NOT IMPACT BASE. BUTT JOINT TO EXIST ASPHALT. FINAL OVERLAY LIMITS ARE FROM EDGE OF PAVEMENT TO EDGE OF PAVEMENT. FINAL OVERLAY TO MATCH EXISTING WITH NO DISCERNABLE "BUMP" AT JOINT. MILLING LIMITS THAT IMPACT INTERSECTION SHALL BE ADDRESSED ON A CASE BY CASE BASIS AND APPROVED BY MANATEE COUNTY.
7. SHEETING ORDERED LEFT IN PLACE TO BE CUT OFF 24" BELOW FINISHED GRADE OR 12" BELOW SUBGRADE.
8. BASE SHALL BE 8" MINIMUM THICKNESS CRUSHED CONCRETE.
9. TEMPORARY PATCHES WILL BE INSTALLED TO PROVIDE A SMOOTH ALL WEATHER SURFACE AT ALL TIMES. PERMANENT REPLACEMENT TO BE MADE AS SOON AS POSSIBLE.
10. RESTORE SIGNAGE & MARKING WITH THERMOPLASTIC PER FDOT STANDARDS, LATEST EDITION.
11. TRACER WIRE NOT REQUIRED FOR GRAVITY SEWERS.
12. NOTES 5. THRU 10. ARE MINIMUM REQUIREMENTS FOR A TRENCH IN A ROAD. REFER TO LATEST EDITION OF MANATEE COUNTY HIGHWAY AND TRAFFIC STANDARDS FOR ADDITIONAL REQUIREMENTS.

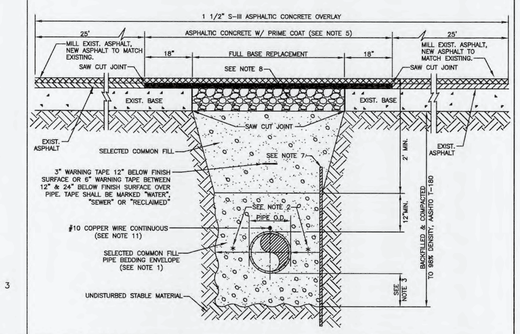

MANATEE COUNTY PUBLIC WORKS DEPARTMENT			TRENCH WITH ASPHALT PAVEMENT SURFACE TYPE A–1 PIPE BEDDING	UG–12
REV.BY	DATE	MAY 10, 2011 DATE OF APPROVAL		PAGE 112
WRT/KE	03/11			

NOTES:

1. USE OF TYPE A–2 AND A–3 PIPE BEDDING TO BE DETERMINED IN THE FIELD BY THE ENGINEER.
2. PROVIDE ADEQUATE CLEARANCE TO PLACE AND COMPACT STAGE 1 BEDDING MATERIAL IN TRENCH AREA BELOW PIPE SPRINGLINE. PIPE EMBEDMENT MUST BE COMPACTED OUT TO THE TRENCH WALL OR 2.5 TIMES THE PIPE OD, WHICHEVER IS LESS.
3. TYPICALLY 4" TO 6".
4. PIPE INSTALLATION SHALL BE IN ACCORDANCE WITH THE MANUFACTURER'S WRITTEN INSTRUCTIONS.
5. THICKNESS TO MATCH EXISTING OR BE 8" MINIMUM, WHICHEVER IS GREATER.
6. SHEETING ORDERED LEFT IN PLACE TO BE CUT OFF 24" BELOW FINISH GRADE OR 12" BELOW SUBGRADE.
7. BASE SHALL BE 8" MINIMUM THICKNESS CRUSHED CONCRETE.
8. TEMPORARY PATCHES WILL BE INSTALLED TO PROVIDE A SMOOTH ALL WEATHER SURFACE AT ALL TIMES. PERMANENT REPLACEMENT TO BE MADE AS SOON AS POSSIBLE.
9. TRACER WIRE NOT REQUIRED FOR GRAVITY SEWERS.
10. NOTES 5. THRU 8. ARE MINIMUM REQUIREMENTS. REFER TO MANATEE COUNTY HIGHWAY AND TRAFFIC STANDARDS FOR ADDITIONAL REQUIREMENTS.

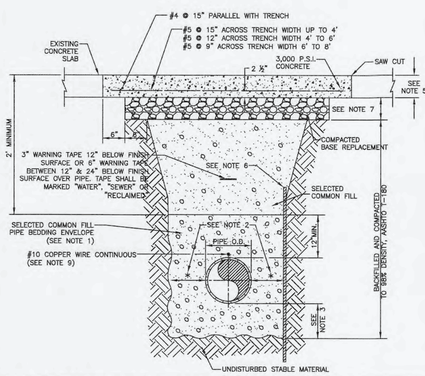

MANATEE COUNTY PUBLIC WORKS DEPARTMENT			TRENCH WITH CONCRETE PAVEMENT SURFACE TYPE A–1 PIPE BEDDING	UG–13
REV.BY	DATE	MAY 10, 2011 DATE OF APPROVAL		PAGE 113
CLB/BR	11/10			

NOTES:

1. USE OF TYPE A–2 AND A–3 PIPE BEDDING TO BE DETERMINED IN THE FIELD BY THE ENGINEER.
2. PROVIDE ADEQUATE CLEARANCE TO PLACE AND COMPACT STAGE 1 BEDDING MATERIAL IN TRENCH AREA BELOW PIPE SPRINGLINE. PIPE EMBEDMENT MUST BE COMPACTED OUT TO THE TRENCH WALL OR 2.5 TIMES THE PIPE OD, WHICHEVER IS LESS.
3. TYPICALLY 4" TO 6".
4. PIPE INSTALLATION SHALL BE IN ACCORDANCE WITH THE MANUFACTURER'S WRITTEN INSTRUCTIONS.
5. THICKNESS TO MATCH EXISTING OR BE 6" MINIMUM, WHICHEVER IS GREATER.
6. SHEETING ORDERED LEFT IN PLACE TO BE CUT OFF 24" BELOW FINISH GRADE OR 12" BELOW SUBGRADE.
7. BASE SHALL BE COMPACTED 6" MINIMUM THICKNESS OF APPROVED MATERIAL.
8. DRIVEWAYS SHALL BE CONSTRUCTED IN ACCORDANCE WITH THE LATEST ADOPTED CONSTRUCTION STANDARDS OF THE MANATEE COUNTY TRANSPORTATION DEPARTMENT.
9. IF THE DRIVEWAY IS 12' OR WIDER, SAWCUT AN EXPANSION JOINT ALONG THE CENTER OF THE DRIVEWAY (3/16" WIDE AND 1½" DEEP) AFTER THE CONCRETE HAS SET.
10. IF THERE IS AN EXISTING EXPANSION JOINT WITHIN 3' OF THE PROPOSED JOINT, EXTEND DRIVEWAY REPLACEMENT TO THE EXISTING JOINT.
11. TRACER WIRE NOT REQUIRED FOR GRAVITY SEWERS.

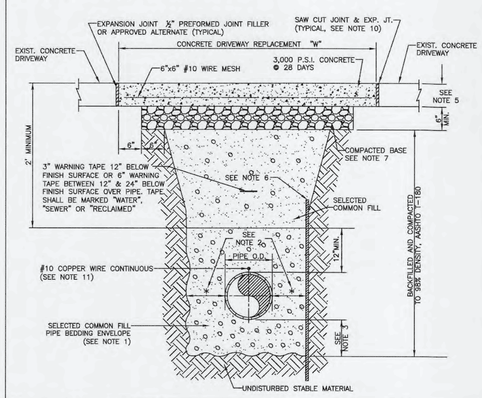

MANATEE COUNTY PUBLIC WORKS DEPARTMENT			TRENCH WITH CONCRETE DRIVEWAY SURFACE TYPE A–1 PIPE BEDDING	UG–14
REV.BY	DATE	MAY 10, 2011 DATE OF APPROVAL		PAGE 114
CLB/BR	11/10			

NOTES:

1. PROVIDE ADEQUATE CLEARANCE TO PLACE AND COMPACT STAGE 1 BEDDING MATERIAL IN TRENCH AREA BELOW PIPE SPRINGLINE. PIPE EMBEDMENT MUST BE COMPACTED OUT TO THE TRENCH WALL OR 2.5 TIMES THE PIPE OD, WHICHEVER IS LESS.
2. TYPICALLY 4" TO 6".
3. PIPE INSTALLATION SHALL BE IN ACCORDANCE WITH MANUFACTURER'S WRITTEN INSTRUCTIONS.
4. TRACER WIRE NOT REQUIRED FOR GRAVITY SEWERS.

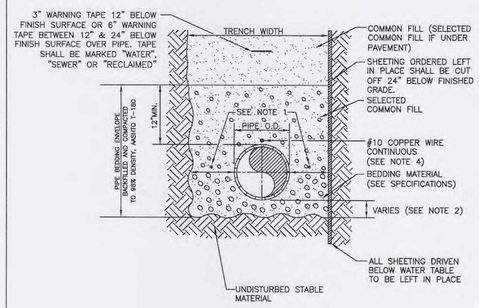

MANATEE COUNTY PUBLIC WORKS DEPARTMENT			TRENCH WITH TYPE A–2 PIPE BEDDING	UG–15
REV.BY	DATE	MAY 10, 2011 DATE OF APPROVAL		PAGE 115
CLB/BR	11/10			

NOTES:

2. PROVIDE ADEQUATE CLEARANCE TO PLACE AND COMPACT STAGE 1 BEDDING MATERIAL IN TRENCH AREA BELOW PIPE SPRINGLINE. PIPE EMBEDMENT MUST BE COMPACTED OUT TO THE TRENCH WALL OR 2.5 TIMES THE PIPE OD, WHICHEVER IS LESS.
3. TYPICALLY 4" TO 6".
4. PIPE INSTALLATION SHALL BE IN ACCORDANCE WITH MANUFACTURER'S WRITTEN INSTRUCTIONS.
5. TRACER WIRE NOT REQUIRED FOR GRAVITY SEWERS.

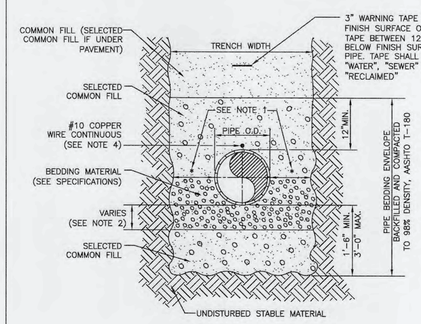

MANATEE COUNTY PUBLIC WORKS DEPARTMENT			TRENCH WITH TYPE A–3 PIPE BEDDING	UG–16
REV.BY	DATE	MAY 10, 2011 DATE OF APPROVAL		PAGE 116
CLB/BR	11/10			

RECLAIMED WATER

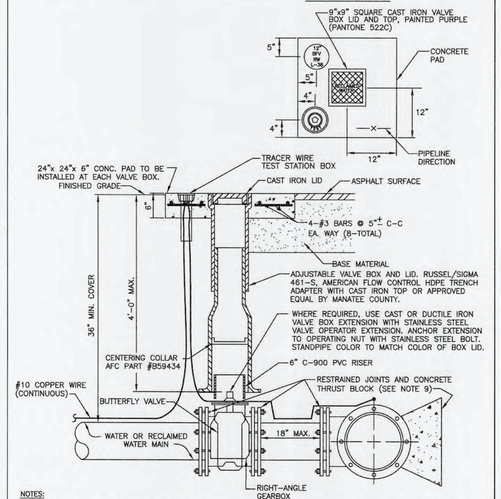

NOTES:

1. "WV" OR "RWV" TO BE IMPRESSED INTO THE NEWLY–POURED CONCRETE CURB, ALONG WITH DISTANCE IN FEET TO THE VALVE. IF NO CURB, INSTALL A BLUE DISC WITH "WV" OR PURPLE DISC WITH "RWV" AND A 1/8"x1" GALVANIZED STEEL SCREW IN THE EDGE OF PAVEMENT WITH THE FOOTAGE FROM THE DISC TO THE VALVE.
2. ALL EXISTING AND PROPOSED VALVE BOXES SHALL BE ADJUSTED TO FINISHED GRADES AS DETERMINED IN THE FIELD.
3. WATER VALVES SHALL NOT BE PLACED IN HANDICAPPED RAMPS.
4. PRECAST CONCRETE PADS & THRUST BLOCKS SHALL NOT BE USED.
5. ALL EXPOSED EDGES OF CONCRETE SHALL BE CHAMFERED 1/2".
6. FOR VALVES 16" AND LARGER, USE BUTTERFLY VALVES.
7. PIPELINE DIRECTION TO BE IMPRESSED INTO NEWLY POURED CONCRETE PAD.
8. TRACER WIRE TEST STATION BOX IS NOT REQUIRED IN VALVE BOX PAD IF THE GATE VALVE IS LOCATED WITHIN 200 FEET OF A WATER SERVICE, BLOW–OFF, BACKFLOW PREVENTER OR FIRE HYDRANT THAT HAS A TRACER WIRE BOX.
9. WHERE THRUST BLOCK NOT USED, RESTRAINED JOINTS MUST THEN EXTEND FROM TEE FULL LENGTH SPECIFIED FOR "TEES."
10. BINGHAM & TAYLOR P200NF6 FOR NORMAL YARD SERVICE. WHERE VALVE WILL BE IN STREET OR PARKING UNDER VEHICLE TRAFFIC, USE P525RD CENTERED IN SEPARATE CONCRETE PAD SIMILAR TO STANDARD VALVE BOX PAD.

MANATEE COUNTY PUBLIC WORKS DEPARTMENT			BUTTERFLY VALVE,BOX, LID AND TAG
REV.BY	DATE	MAY 10, 2011 DATE OF APPROVAL	
WRT/KE	03/11		

REV.NO.	DESCRIPTIONS	DATE
	REVISIONS	

ANTHONY L. PEVEC, LICENSE No.66706, STATE OF FLORIDA, PROFESSIONAL ENGINEER — SEAL

ANTHONY L. PEVEC, P.E. No. 66706

SEAL

McKIM&CREED
1365 Hamlet Avenue
Clearwater, Florida 33756
Phone: (727)442–7196, Fax: (727)461–3827
CA LIC No. 29588
www.mckimcreed.com

Manatee County FLORIDA

SWWRF
CCC REHAB AND
RECHARGE WELL PS PROJECT

CIVIL DETAILS

DATE:	SEPTEMBER, 2019
MCE PROJ. #	1024–0171
DRAWN	CN
DESIGNED	TP
CHECKED	JV
PROJ. MGR.	TP

SCALE
HORIZONTAL: NA
VERTICAL: NA

DRAWING NUMBER
C-06

STATUS: ISSUED FOR BID

REVISION

S:\1024\0171\05-Drawings\CIVIL\C-05_C-08 1024017l.dwg, 9/16/2019 3:44:43 PM, Carlos Najarro

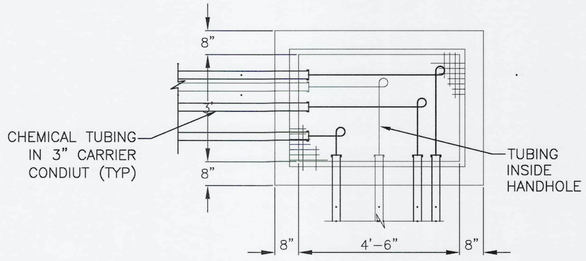

PLAN

NOTES:

1. HANDHOLES SHOWN ON DRAWINGS MAY DIFFER IN ACTUAL PIPING ARRANGEMENT. HANDHOLE SHOWN FOR PURPOSES OF CONSTRUCTION.
2. ALL ANCHORS SHALL BE 316 SST. ALL MACHINED BOLTS SHALL BE 18-8 SST.
3. PIPING SHALL BE 3" SCH. 40 PVC. TUBING SHALL BE 1/2" I.D. CHEMFLUR 367. SEE SPECIFICATIONS.
4. PROVIDE 5-FT MIN. ADDITIONAL TUBING LOOPED IN MANHOLE.

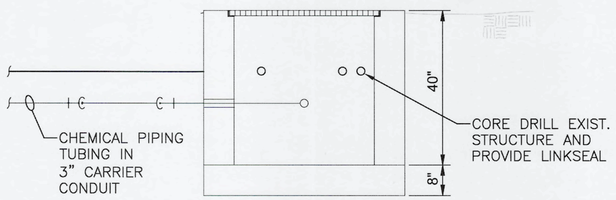

SECTION

EXISTING CHEMICAL PIPING MANHOLE
NOT TO SCALE

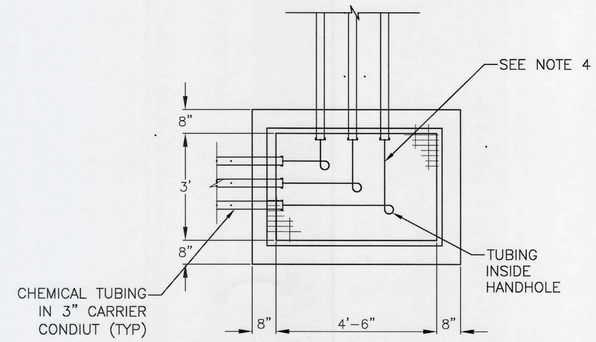

PLAN

NOTES:

1. HANDHOLES SHOWN ON DRAWINGS MAY DIFFER IN ACTUAL PIPING ARRANGEMENT. HANDHOLE SHOWN FOR PURPOSES OF CONSTRUCTION.
2. ALL ANCHORS SHALL BE 316 SST. ALL MACHINED BOLTS SHALL BE 18-8 SST.
3. PIPING SHALL BE 3" SCH. 40 PVC. TUBING SHALL BE 1/2" I.D. FLUROPOLYMER SEE SPECIFICATIONS. .
4. PROVIDE 5-FT MIN. ADDITIONAL TUBING LOOPED IN MANHOLE.
5. PROVIDE REINFORCING AS REQUIRED FOR HS-20 LOADING.
6. PROVIDE HOT-DIPPED GALVANIZED STEEL TRAFFIC DUTY GRATE AND FRAME RATED FOR HS-20 LOADING.

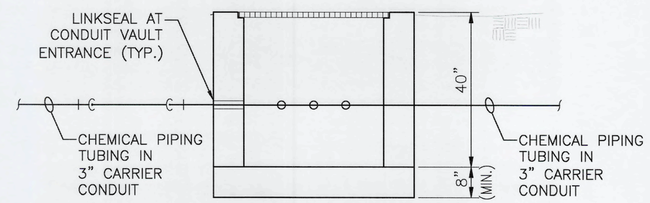

SECTION

NEW CHEMICAL PIPING MANHOLE
NOT TO SCALE

REV.NO.	DESCRIPTIONS	DATE
	REVISIONS	

ANTHONY L. PEVEC LICENSE No. 66706 STATE OF FLORIDA PROFESSIONAL ENGINEER
ANTHONY L. PEVEC, P.E.
No. 66706

SEAL

McKIM&CREED
1365 Hamlet Avenue
Clearwater, Florida 33756
Phone: (727)442-7196, Fax: (727)461-3827
CA LIC No. 29588
www.mckimcreed.com

Manatee County FLORIDA

SWWRF
CCC REHAB AND
RECHARGE WELL PS PROJECT

CIVIL DETAILS

DATE:	SEPTEMBER, 2019
MCE PROJ. #	1024-0171
DRAWN	CN
DESIGNED	TP
CHECKED	JV
PROJ. MGR.	TP

SCALE
HORIZONTAL: NA
VERTICAL: NA

DRAWING NUMBER
C-07

STATUS: ISSUED FOR BID
REVISION

S:\1024\0171\00-Drawings\Civil\C-05_C-08 1024017I.dwg, 9/16/2019 3:44:44 PM, Carlos Najarro

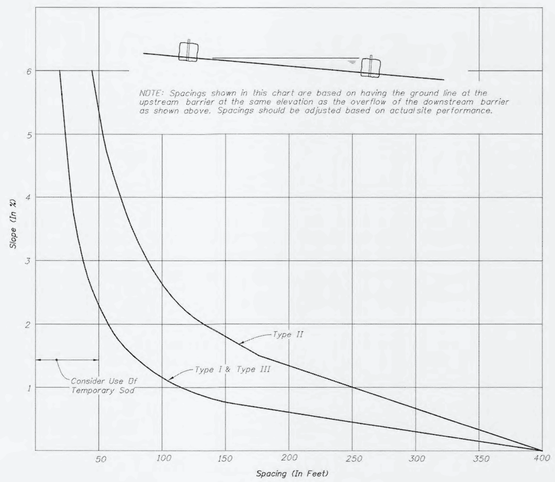

CHART I

RECOMMENDED SPACING FOR SYNTHETIC BALES OR BALE TYPE BARRIERS AND TYPE III SILT FENCE

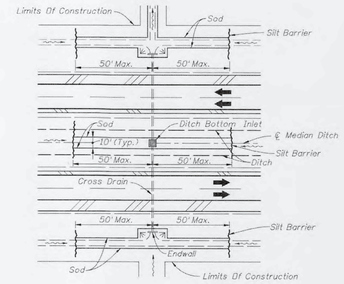

DITCH INSTALLATIONS AT DRAINAGE STRUCTURES

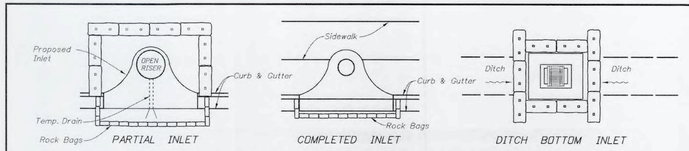

PROTECTION AROUND INLETS OR SIMILAR STRUCTURES

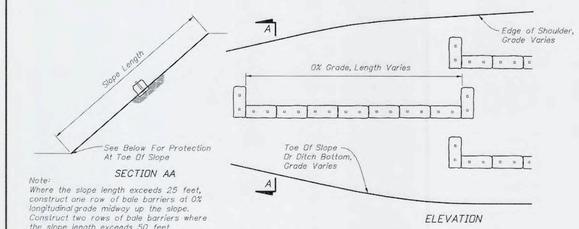

Note:
Where the slope length exceeds 25 feet, construct one row of bale barriers at 0% longitudinal grade midway up the slope. Construct two rows of bale barriers where the slope length exceeds 50 feet.

ALONG FILL SLOPE

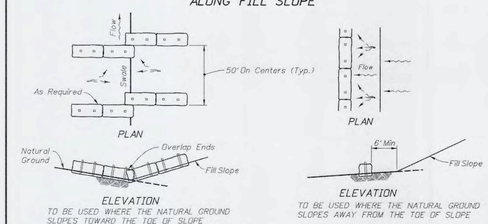

AT TOE OF SLOPE
BARRIERS FOR FILL SLOPES

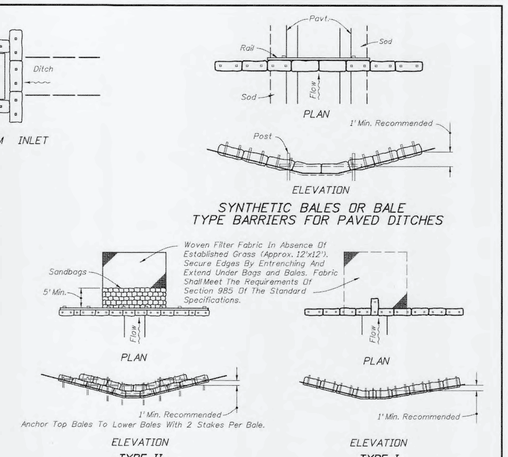

SYNTHETIC BALES OR BALE TYPE BARRIERS FOR PAVED DITCHES

SYNTHETIC BALES OR BALE TYPE BARRIERS FOR UNPAVED DITCHES

NOTES FOR SYNTHETIC BALES OR BALE TYPE BARRIERS

1. Type I and II Synthetic Barrier should be spaced in accordance with Chart 1, Sheet 1.
2. Bales shall be anchored with 2-1" x 2" (or 1" dia.) x 4' wood stakes. Stakes of other material or shape providing equivalent strength may be used if approved by the Engineer. Stakes other than wood shall be removed upon completion of the project.
3. Rails and posts shall be 2" x 4" wood. Other materials providing equivalent strength may be used if approved by the Engineer.
4. Adjacent bales shall be butted firmly together.
5. Where used in conjunction with silt fence, bales shall be placed on the upstream side of the fence.
6. Bales to be paid for under the contract unit price for Synthetic Bales, LF. The unit price shall include the cost of filter fabric for Type I and II Barriers. Sandbags shall be paid for under the unit price for Sandbagging, CY. Rock bags to be paid for under the contract unit price for Rock Bags, EA.

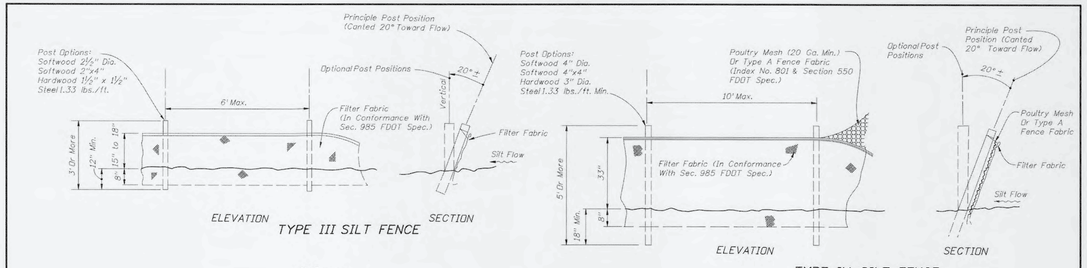

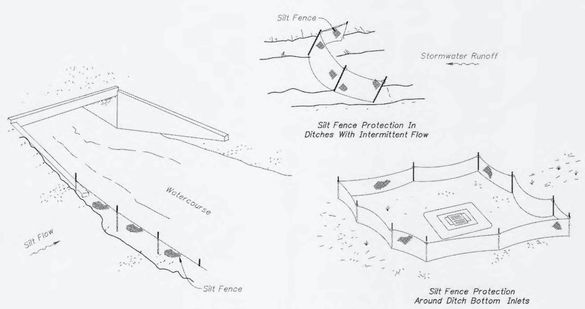

SILT FENCE APPLICATIONS

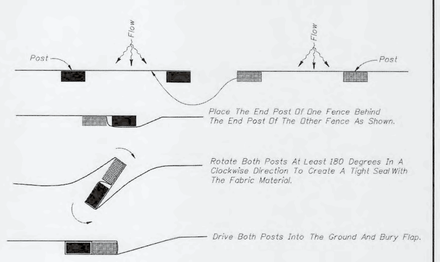

PLAN VIEW
JOINING TWO SILT FENCES

NOTES FOR SILT FENCES

1. Type III Silt Fence to be used at most locations. Where used in ditches, the spacing for Type III Silt fence shall be in accordance with Chart 1, Sheet 1.
2. Type IV Silt Fence to be used where large sediment loads are anticipated. Suggested use is where fill slope is 1:2 or steeper and length of slope exceeds 25 feet. Avoid use where the detained water may back into travellanes or off the right of way.
3. Do not construct silt fences across permanent flowing watercourses. Silt fences are to be at upland locations and turbidity barriers used at permanent bodies of water.
4. Where used as slope protection, Silt Fence is to be constructed on 0% longitudinal grade to avoid channelizing runoff along the length of the fence.
5. Silt Fence to be paid for under the contract unit price for Staked Silt Fence, (LF).

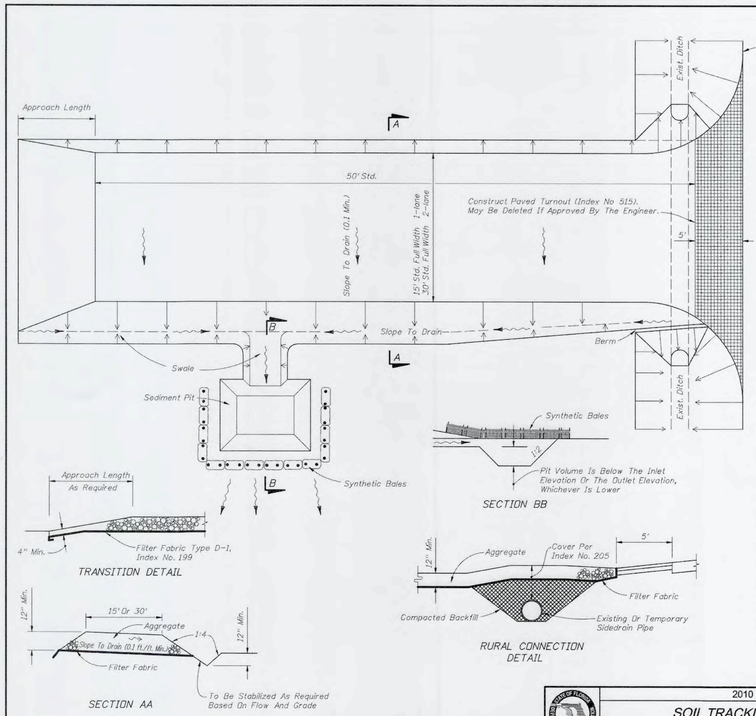

GENERAL NOTES

1. A Soil Tracking Prevention Device (STPD) shall be constructed at locations designated by the engineer for points of egress from unstabilized areas of the project to public roads where off-site tracking of mud could occur. Traffic from unstabilized areas of the construction project shall be directed thru a STPD. Barriers, flagging, or other positive means shall be used as required to limit and direct vehicular egress across the STPD.
2. The Contractor may propose an alternative technique to minimize off-site tracking of sediment. The alternative must be reviewed and approved by the Engineer prior to its use.
3. All materials spilled, dropped, or tracked onto public roads (including the STPD aggregate and construction mud) shall be removed daily, or more frequently if so directed by the Engineer.
4. Aggregates shall be as described in Section 901 excluding 901-2.3. Aggregates shall be FDOT size #1. If this size is not available, the next available smaller size aggregate may be substituted with the approval of the Engineer. Sizes containing excessive small aggregate will track off the project and are unsuitable.
5. The sediment pit should provide a retention volume of 3600 cubic feet/acre of surface area draining to the pit.
   When the STPD is isolated from other drainage areas, the following pit volumes will satisfy this requirement:
   15' x 50'=400 ft.^{3} 30' x 50'=200 ft.^{3}
   As an option to the sediment pit, the width of the swale bottom can be increased to obtain the volume. When the sediment pit or swale volume has been reduced to one half, it shall be cleaned. When a swale is used, synthetic bales or silt fence shall be placed along the entire length.
6. The swale ditch draining the STPD shall have a 0.02% minimum and a 1.0% maximum grade along the STPD and to the sediment pit.
7. Mitered end sections are not required when the sidedrain pipe satisfies the clear zone requirements.
8. The STPD shall be maintained in a condition that will allow it to perform its function. To prevent off-site tracking, the STPD shall be rinsed (daily when in use) to move accumulated mud downward thru the stone. Additional stabilization of the vehicular route leading to the STPD may be required to limit the mud tracked.
9. A STPD shall be paid for under the contract unit price for Soil Tracking Prevention Device, EA. The unit price shall constitute full compensation for construction, maintenance, replacement of materials, removal, and restoration of the area utilized for the STPD including but not limited to excavation, grading, temporary pipe (including MES when required), filter fabric, aggregate, paved turnout (including asphalt and base construction), ditch stabilization, approach route stabilization, sediment removal and disposal, water, rinsing and cleaning of the STPD and cleaning of public roads, grassing and sod. Synthetic Bale or Bale Type Barrier shall be paid for under the contract unit price for Synthetic Bales, LF. Silt fence shall be paid for under the contract unit price for Staked Silt Fence, LF.
10. The nominal size of a standard STPD is 15' x 50' unless otherwise shown in the plans. If the volume of entering and existing vehicles warrant, a 30' width STPD may be used if approved by the Engineer. When a double width (30') STPD is used, the pay quantity shall be 2 for each location.

REV.NO.	DESCRIPTIONS	DATE

REVISIONS

ANTHONY L. PEVEC, P.E. LICENSE No.66706 STATE OF FLORIDA PROFESSIONAL ENGINEER

ANTHONY L. PEVEC, P.E.
No. 66706

SEAL

McKIM & CREED
1365 Hamlet Avenue
Clearwater, Florida 33756
Phone: (727)442-7196, Fax: (727)461-3827
CA LIC No. 29588
www.mckimcreed.com

Manatee County FLORIDA

SWWRF
CCC REHAB AND
RECHARGE WELL PS PROJECT

CIVIL DETAILS

DATE:	SEPTEMBER, 2019
MCE PROJ. #	1024-0171
DRAWN	CN
DESIGNED	TP
CHECKED	JV
PROJ. MGR.	TP

SCALE
HORIZONTAL: NA
VERTICAL: NA

DRAWING NUMBER
C-08

STATUS: ISSUED FOR BID
REVISION

S:\1024\0171\B0-Drawings\CIVIL\C-05_C-08 10240171.dwg, 9/19/2019 3:44:49 PM, Carlos Rojjero

1.0 GENERAL

1.1 ALL WORK IS TO BE PERFORMED IN A GOOD, WORKMANLIKE AND PROFESSIONAL MANNER.

1.2 ALL CONSTRUCTION SHALL BE IN STRICT COMPLIANCE WITH THE REQUIREMENTS OF THE FLORIDA BUILDING CODE, 2017 EDITION, OR LOCAL BUILDING CODE REQUIREMENTS IF MORE STRINGENT.

1.3 THESE DRAWINGS DO NOT SHOW PROVISIONS FOR SAFETY DURING CONSTRUCTION. IT IS THE RESPONSIBILITY OF THE GENERAL CONTRACTOR TO PROVIDE THE REQUIRED BRACING, SHORING, AND SAFETY DEVICES THROUGHOUT THE CONSTRUCTION OF THIS PROJECT.

2.0 COORDINATION

2.1 STRUCTURAL DRAWINGS SHALL BE USED IN CONJUNCTION WITH AND COORDINATED WITH, CIVIL, ELECTRICAL, HVAC, AND MECHANICAL DRAWINGS, INCLUDING VENDOR SUBMITTAL DRAWINGS AND OTHER CONTRACT DOCUMENTS.

2.2 COORDINATE THE EXACT SIZE AND LOCATION OF ALL SLEEVES AND OPENINGS THROUGH WALLS OR CONCRETE SLABS WITH, CIVIL, ELECTRICAL, HVAC, AND MECHANICAL, INCLUDING VENDOR SUBMITTAL DRAWINGS AND OTHER CONTRACT DOCUMENTS.

2.3 THE CONTRACTOR SHALL SUBMIT COMPOSITE DRAWINGS INDICATING ALL FLOOR AND WALL OPENINGS AND PENETRATIONS THROUGH STRUCTURAL MEMBERS REQUIRED TO ACCOMMODATE ALL OTHER WORK. THE CONTRACTOR SHALL FOLLOW THE TYPICAL DETAILS AT OPENINGS AND SUBMIT SHOP DRAWINGS TO THE ENGINEER FOR REVIEW.

2.4 ANY DISCREPANCIES BETWEEN ACTUAL CONDITIONS AND THOSE SHOWN ON THESE DRAWINGS ARE TO BE BROUGHT TO THE ATTENTION OF THE STRUCTURAL ENGINEER BEFORE WORK PROCEEDS, INCLUDING ORDERING AND FABRICATING MATERIALS.

2.5 INDEPENDENT TESTING OF MATERIALS SHALL BE PROVIDED AS DEFINED IN PROJECT SPECIFICATIONS. IN GENERAL PROJECT INVOLVES THE FOLLOWING:
A. SOIL/FILL COMPACTION & BEARING.
B. C.I.P., PRE-CAST CONCRETE.
C. STRUCTURAL STEEL.
D. STRUCTURAL ALUMINUM.

2.6 IF COORDINATION OF INFORMATION PRESENTED CONFLICTS w/ THE PROJECT SPECIFICATIONS, THE DRAWINGS WILL TAKE PRECEDENCE.

2.7 IN GENERAL CALL-OUTS ARE FOR NEW CONSTRUCTION U.N.O.. EXISTING CONSTRUCTION CALL-OUTS, ELEVATIONS AND DIMENSIONS OF EXISTING STRUCTURES ARE BASED ON EXISTING RECORD DRAWINGS PROVIDED BY MANATEE COUNTY.

2.8 THE (*) SYMBOL ON INDIVIDUAL DIMENSIONS INDICATES DIMENSION TO BE VERIFIED EITHER BY FIELD MEASUREMENT FOR EXISTING STRUCTURES OR BY SHOP DRAWINGS FOR EQUIPMENT FURNISHED. STRUCTURAL DIMENSIONS NOT SHOWN BUT CONTROLLED BY OR RELATED TO EQUIPMENT SHALL BE VERIFIED BY THE CONTRACTOR WITH THE MANUFACTURER PRIOR TO CONSTRUCTION.

2.9 EQUIPMENT ANCHOR BOLT SIZES, TYPES AND PATTERNS SHALL BE VERIFIED WITH THE MANUFACTURER. ALL BOLT PATTERNS SHALL BE TEMPLATED TO INSURE ACCURACY OF PLACEMENT.

2.10 IF A CONFLICT IS FOUND BETWEEN DIFFERENT PORTIONS OF THE CONTRACT DOCUMENTS, THE CONTRACTOR SHALL NOTIFY THE ENGINEER IMMEDIATELY. CONTINUED CONSTRUCTION OF THE AREA IN CONFLICT SHALL BE AT THE CONTRACTOR'S OWN RISK UNTIL THE CONFLICT IS RESOLVED BY THE ENGINEER.

3.0 FOUNDATIONS

3.1 DESIGN ALLOWABLE SOIL BEARING PRESSURE – IS IN ACCORDANCE WITH THE PROJECT GEOTECHNICAL REPORT AS PREPARED BY DRIGGERS ENGINEERING SERVICES, INC. (PROJECT No. DES 178063). THE CONTRACTOR IS RESPONSIBLE FOR VERIFYING THIS VALUE PRIOR TO FOUNDATION CONSTRUCTION. IN AREAS WHERE THE SOIL DOES NOT YIELD THIS BEARING STRESS VALUE, ADJUSTMENT IN THE FOOTING DEPTHS AND FOUNDATION DIMENSION MAY BE MADE BY THE ENGINEER BEFORE WORK PROCEEDS. CONTRACTOR IS RESPONSIBLE FOR PERFORMING ANY SUCH ADJUSTMENTS.

3.2 PREPARE THE EXISTING SUBGRADE IN ACCORDANCE w/ THE PROJECT GEOTECHNICAL REPORT AS PREPARED BY DRIGGERS ENGINEERING SERVICES, INC. (PROJECT No. DES 178063), IN THE EVENT UNUSUAL SOIL CONDITIONS ARE UNCOVERED, INCLUDING CONDITIONS THAT DEVIATE FROM THOSE DESCRIBED IN THE PROJECT GEOTECHNICAL REPORT, NOTIFY THE OWNER AND ENGINEER PRIOR TO FOUNDATION CONSTRUCTION FOR INSTRUCTIONS HOW TO PROCEED. ADJUSTMENT IN THE FOOTING DEPTHS AND GENERAL FOUNDATION CONSTRUCTION MAY BE MADE BY THE ENGINEER BEFORE WORK PROCEEDS. CONTRACTOR IS RESPONSIBLE FOR PERFORMING ANY SUCH ADJUSTMENTS.

3.3 FOOTING & BASE SLAB EXCAVATIONS, FORMS AND REINFORCEMENT SHALL BE REVIEWED BY AN OWNER'S CONSTRUCTION REPRESENTATIVE PRIOR TO PLACEMENT OF CONCRETE.

3.4 FOOTING & BASE SLAB ELEVATIONS SHALL NOT BE RAISED OR LOWERED WITHOUT APPROVAL OF THE STRUCTURAL ENGINEER.

3.5 ALL EXCAVATIONS SHALL BE ADEQUATELY DEWATERED BEFORE PLACEMENT OF CONCRETE. NO CONCRETE OR CONCRETE FILL SHALL BE PLACED IN STANDING WATER. WATER ACCUMULATION SHALL BE PUMPED OUT.

3.6 ALL FILL BELOW FOUNDATIONS SHALL BE SELECT MATERIAL FREE FROM ROOTS, TRASH WOOD SCRAPS, AND OTHER EXTRANEOUS MATERIALS. PLACE FILL IN LIFTS NOT EXCEEDING THE RECOMMENDATIONS OF THE PROJECT GEOTECHNICAL REPORT.

3.7 ALL FOOTINGS SHALL BE CENTERED UNDER THE SUPPORTING MEMBER UNLESS NOTED OTHERWISE.

3.8 CONSTRUCTION JOINTS IN SLABS, WALLS & FOOTINGS SHALL BE MADE AT LOCATIONS SHOWN ON DRAWINGS.

3.9 ANCHOR BOLTS SHALL BE SET BY MEANS OF TEMPLATE. "FLOATING" ANCHOR BOLTS INTO PLACE IS PROHIBITED.

3.10 CONTRACTOR IS TO VERIFY THE ELEVATION AND LOCATION OF ALL EXISTING AND PROPOSED UTILITIES PRIOR TO CONSTRUCTION. UTILITY LINES DAMAGED WILL BE REPLACED AT THE CONTRACTOR'S EXPENSE. IF UNDOCUMENTED UTILITY LINES ARE ENCOUNTERED WHEN EXCAVATING THE CONTRACTOR IS TO CEASE ALL EXCAVATION ACTIVITY UNTIL THE ENGINEER AND OWNER ARE NOTIFIED AND INSTRUCTIONS ARE PROVIDED ABOUT HOW TO PROCEED.

3.11 THE CONTRACTOR SHALL OBTAIN THE OWNER'S PERMISSION BEFORE ENCASING OR BACK FILLING AROUND ANY EXISTING UNDERGROUND STRUCTURE, PIPING, ELECTRICAL, OR OTHER UNDERGROUND WORK.

3.12 ALL UTILITIES UNDER FOUNDATION SHALL BE ENCASED IN CONCRETE UP TO 5' BEYOND FOUNDATION EDGE.

4.0 REINFORCING STEEL

4.1 BARS SHALL BE ROLLED FROM NEW BILLET-STEEL OF DOMESTIC MANUFACTURE CONFORMING TO "STANDARD SPECIFICATION FOR DEFORMED AND PLAIN BILLET STEEL BARS FOR CONCRETE REINFORCEMENT," ASTM A615, GRADE 60 AND SUPPLEMENTARY REQUIREMENT S-1.

4.2 DETAIL AND FABRICATE REINFORCING STEEL IN ACCORDANCE WITH THE AMERICAN CONCRETE INSTITUTE "ACI DETAILING MANUAL," LATEST PUBLICATION.

4.3 REINFORCING STEEL PLACING DRAWING AND BAR LISTS SHALL CONFORM TO THE ACI OR CRSI DETAILING MANUAL. ALL BAR AND MESH SUPPORTS MUST BE CLEARLY DETAILED.

4.4 REINFORCING STEEL FABRICATION AND PLACEMENT SHALL BE IN ACCORDANCE WITH CRSI MANUAL OF STANDARD PRACTICE AND CRSI PLACING REINFORCING BARS (LATEST EDITIONS).

4.5 REINFORCING STEEL IN PLACE SHALL BE REVIEWED BY THE OWNER'S CONSTRUCTION REPRESENTATIVE PRIOR TO PLACEMENT OF CONCRETE.

4.6 WELDED WIRE FABRIC SHALL CONFORM TO "STANDARD SPECIFICATION FOR WELDED STEEL WIRE FABRIC FOR CONCRETE REINFORCEMENT," ASTM A185.

4.7 PLACE WELDED WIRE FABRIC AT CENTER OF SLABS-ON-GRADE AND ELEVATED SLAB TOPPINGS, UNLESS NOTED OTHERWISE.

4.8 PROVIDE BARS AT CORNERS AND INTERSECTIONS OF WALLS & FOOTINGS OF THE SAME NUMBER AND SIZE AS LONGITUDINAL BARS, U.N.O. ON THE DRAWINGS.

4.9 FABRICATE CONTINUOUS BARS IN WALLS & FOOTINGS TO THE LONGEST PRACTICABLE LENGTHS.

4.10 REINFORCING STEEL SHALL NOT BE BENT AFTER BEING PARTIALLY EMBEDDED IN HARDENED CONCRETE.

4.11 BARS SHALL BE COLD BENT AND SHALL NOT BE HEATED FOR ANY REASON.

4.12 REINFORCING BARS SHALL NOT BE WELDED UNLESS NOTED OTHERWISE ON THE DRAWINGS.

4.13 REFERENCE DRAWINGS FOR REQUIREMENTS FOR LAP SPLICING REINFORCING STEEL IN CONCRETE. ALL SHALL CONFORM TO CLASS B SPLICE CRITERIA.

4.14 LAP SPLICED BARS IN CONCRETE ARE TO BE WIRE TIED.

4.15 LAP SPLICED BARS IN MASONRY ARE TO BE NO FARTHER APART THAN 8".

5.0 CONCRETE

5.1 IN GENERAL CONCRETE SHALL DEVELOP 3,000 TO 4,500 psi MINIMUM COMPRESSIVE STRENGTH AT 28 DAYS. REFERENCE "DESIGN CRITERIA" THIS DWG. & PROJECT SPECIFICATIONS, FOR APPLICATION & SPECIFIC CONCRETE MIX DESIGN REQUIREMENTS. USE TYPE II, ASTM C150 CEMENT WITH MINIMUM 20% BY WEIGHT SLAG AND/OR FLY ASH CONTENT. FLY ASH SHALL BE PER ASTM C618 SLAG SHALL BE PER ASTM C989 GRADE 120.

5.2 CONCRETE WORK SHALL CONFORM TO "BUILDING CODE REQUIREMENTS FOR REINFORCED CONCRETE", ACI 318-14 & TO "CODE REQUIREMENTS FOR ENVIRONMENTAL ENGINEERING CONCRETE STRUCTURES", ACI 350-06.

5.3 PLACE 1/2 INCH EXPANSION JOINT MATERIAL BETWEEN EDGES OF SLABS AND VERTICAL SURFACES UNLESS NOTED OTHERWISE.

5.4 PROVIDE CONSTRUCTION OR CONTROL JOINTS IN SLABS & WALLS AT LOCATIONS SHOWN ON DRAWINGS, AT OFFSETS AND CHANGES IN DIRECTION AND AT THIRTY (30) FEET MAXIMUM U.N.O.. GENERAL CONTRACTOR TO PROVIDE CONSTRUCTION JOINT LAYOUT PLAN PER THE PROJECT SPECIFICATIONS PRIOR TO CONSTRUCTION, INCLUDING ORDERING & FABRICATING MATERIALS.

5.5 CHAMFER EXPOSED EDGES OF CONCRETE 3/4 INCH, UNLESS NOTED OTHERWISE.

5.6 CONTRACTOR SHALL BE RESPONSIBLE FOR PROPER CURING OF ALL CONCRETE. CURING METHODS SHALL CONFORM TO "BUILDING CODE REQUIREMENTS FOR REINFORCED CONCRETE", ACI 318, "CODE REQUIREMENTS FOR ENVIRONMENTAL ENGINEERING CONCRETE STRUCTURES" ACI 350 AND "STANDARD PRACTICE FOR CURING CONCRETE," ACI 308, LATEST EDITIONS.

5.7 UNLESS NOTED OTHERWISE DOWELS SHALL BE THE SAME NUMBER AND SIZE AS THE LARGEST VERTICAL BAR TO WHICH THEY ARE SPLICED.

5.8 REFERENCE PROJECT SPECIFICATIONS FOR REQUIRED FINISHES.

5.9 CONTRACTOR SHALL SUBMIT REBAR SHOP DRAWINGS FOR APPROVAL TO OWNER PRIOR TO FABRICATION. DO NOT FABRICATE REINFORCING PRIOR TO RECEIPT OF APPROVED SHOP DRAWINGS.

5.10 CONCRETE MIXES TO BE REVIEWED BY THE OWNER'S CONSTRUCTION REPRESENTATIVE PRIOR TO PLACEMENT OF CONCRETE. COMPRESSIVE STRENGTH TEST CYLINDERS TO BE REVIEWED BY THE OWNER'S CONSTRUCTION REPRESENTATIVE THROUGHOUT CONCRETE CONSTRUCTION OF THE PROJECT.

5.11 ROUGHEN THE "BASE" CONCRETE POUR SURFACE TO A FULL AMPLITUDE OF 1/4" MINIMUM, WHERE NOTED ON THE CONSTRUCTION DRAWINGS.

5.12 CONCRETE ACCESSORIES AS FOLLOWS:
a.) PREFORMED WATERSTOPS SHALL BE PVC IN ACCORDANCE w/ THE PROJECT SPECIFICATIONS.
b.) EXPANSIVE WATERSTOPS SHALL BE ADEKA ULTRA SEAL TYPE MC-2010M. THE WATERSTOPS CAN BE EITHER ADHERED TO THE CONCRETE WITH 3M-2141 BONDING ADHESIVE OR NAILED IN PLACE USING 1.5 INCH SS 316 CONCRETE NAILS 3 TO 6 INCHES APART.
c.) CAULK/SEALANT – IN ACCORDANCE W/ PROJECT SPECIFICATIONS.
d.) BONDING AGENT – SHALL BE STRUCTURAL EPOXY ADHESIVE CONFORMING TO ASTM C-881 TYPE I STRENGTH AND II, GRADE 2, CLASS B AND C WITH A MINIMUM BOND STRENGTH OF 1900 PSI.
1.) SIKA ARMATEC 110 EpoCem.

5.13 CONCRETE COVER FOR REINFORCING:
A.) UNFORMED SURFACES CAST AGAINST EARTH 3" MIN
B.) ALL OTHER SURFACES, 2" MIN

6.0 GROUT

6.1 PROVIDE NON-SHRINK GROUT UNDER ALL COLUMN BASE PLATES AND BEAM BEARING PLATES AND ELSEWHERE AS INDICATED ON DRAWINGS. NON-SHRINK GROUT SHALL CONFORM TO ASTM C1107.

6.2 GROUT SHALL BE NON-METALLIC AND NON-STAINING AND HAVE A MINIMUM COMPRESSIVE STRENGTH OF 7000 psi.

7.0 STRUCTURAL STEEL

7.1 STEEL SHALL CONFORM TO "STANDARD SPECIFICATION FOR STRUCTURAL STEEL," ASTM A36 (Fy=36 ksi) FOR ANGLES, PLATES & CHANNELS. WIDE FLANGE SECTIONS SHALL CONFORM TO ASTM A572 (Fy=50ksi). HOLLOW STEEL SECTIONS (HSS) SHALL CONFORM TO ASTM A500, GRADE B (Fy=46 ksi). STEEL PIPE SHALL CONFORM TO ASTM A53, GRADE B, (Fy=35 ksi).

7.2 STEEL WORK SHALL CONFORM TO "SPECIFICATION FOR THE DESIGN, FABRICATION AND ERECTION OF STRUCTURAL STEEL BUILDINGS", OF THE AMERICAN INSTITUTE OF STEEL CONSTRUCTION, INC., (LATEST EDITION), INCLUDING ALL SUPPLEMENTS AND THE "CODE OF STANDARD PRACTICE FOR STEEL BUILDINGS AND BRIDGES", (LATEST EDITION).

7.3 CONNECTION BOLTS SHALL BE 3/4 INCH DIAMETER CONFORMING TO "STANDARD SPECIFICATION FOR HIGH-STRENGTH BOLTS FOR STRUCTURAL STEEL JOINTS", ASTM A325, UNLESS NOTED OTHERWISE CONNECTIONS ARE BEARING TYPE WITH THREADS EXCLUDED FROM SHEAR PLANES (A325x).

7.4 WELDING SHALL BE IN ACCORDANCE WITH THE LATEST EDITION OF THE AMERICAN WELDING SOCIETY AWS D1.1 "STRUCTURAL WELDING CODE". WELDING SHALL BE PERFORMED BY CERTIFIED PERSONNEL WHO HAVE BEEN PREVIOUSLY QUALIFIED BY TEST PRESCRIBED IN THE AWS "STRUCTURAL WELDING CODE". ELECTRODES SHALL CONFORM TO AWS 5.5, E70XX.

7.5 LINTELS SHALL BEAR EIGHT (8) INCHES MINIMUM ON MASONRY UNLESS NOTED OTHERWISE.

8.6 THE CONTRACTOR SHALL PROVIDE ADEQUATE TEMPORARY BRACING, SHORING, AND GUYING OF STEEL FRAMING AGAINST WIND, CONSTRUCTION LOADS, AND OTHER TEMPORARY FORCES UNTIL SUCH PROTECTION IS NO LONGER REQUIRED FOR THE SAFE SUPPORT OF THE FRAMING.

7.7 ALL COPES, BLOCKS, CUTS, CUT-OFFS AND OTHER CUTTING OF STRUCTURAL MEMBERS SHALL HAVE ALL RE-ENTRANT CORNERS SHAPED, AND NOTCH-FREE TO A RADIUS OF AT LEAST 1/2 INCH. THE FILLET AND ITS CONTIGUOUS CUTS SHALL MEET WITHOUT OFFSET OR CUTTING PAST THE POINT OF TANGENCY.

7.8 ANCHOR BOLTS SHALL BE TYPE 316 S.S. & SHALL BE HEADED w/ NUTS TACK WELDED TO BOLTS AS REQUIRED BY THE DRAWINGS. PROVIDE (2) NUTS AND WASHERS WITH EACH ANCHOR BOLT AT COLUMNS.

7.9 OVERSIZED AND SLOTTED HOLES SHALL NOT BE USED FOR BOLTED CONNECTIONS ON THIS PROJECT EXCEPT AT LOCATIONS NOTED ON DRAWINGS.

7.10 SPLICING OF STRUCTURAL STEEL MEMBERS IS PROHIBITED WITHOUT THE APPROVAL OF THE STRUCTURAL ENGINEER, AS TO LOCATION AND TYPE OF SPLICE. ANY MEMBER HAVING A SPLICE NOT SHOWN AND DETAILED ON THE SHOP DRAWINGS SHALL BE REPLACED.

7.11 PRE-GROUTING BASE PLATES IS NOT PERMITTED.

7.12 ALL HOLES IN STRUCTURAL STEEL ARE TO BE PUNCHED OR DRILLED. FLAME CUTTING OF STEEL IS STRICTLY PROHIBITED.

7.13 ALL DESIGN, DETAILING, FABRICATION AND ERECTION SHALL BE IN ACCORDANCE WITH THE LATEST EDITION OF THE AMERICAN INSTITUTE OF STEEL CONSTRUCTION (AISC) MANUAL OF STEEL CONSTRUCTION.

7.14 IN GENERAL SHOP CONNECTIONS SHALL BE EITHER WELDED OR BOLTED AND FIELD CONNECTIONS SHALL BE BOLTED UNLESS NOTED OTHERWISE.

7.15 FABRICATOR/CONTRACTOR SHALL SUBMIT SHOP DRAWINGS FOR OWNER/ENGINEER APPROVAL PRIOR TO FABRICATION. ALL SHOP DRAWINGS MAY BE EXPEDITED IF THE FABRICATOR ADHERES CLOSELY TO THE DETAILS, NOTES, AND INSTRUCTIONS, SHOWN ON THE DRAWINGS.

7.16 ALL GALVANIZED MATERIALS THAT ARE FIELD CUT, FIELD WELDED OR DAMAGED IN SURFACE FINISH SHALL BE CLEANED AND RE-COATED AS CALLED OUT IN THE PROJECT SPECIFICATIONS.

7.17 STRUCTURAL STEEL FRAMING & DECKING ERECTION TO BE REVIEWED BY THE THE OWNER'S CONSTRUCTION REPRESENTATIVE THROUGHOUT CONCRETE & STEEL CONSTRUCTION OF THE PROJECT.

8.0 ALUMINUM

8.1 ALUMINUM FABRICATION SHALL BE IN CONFORMANCE WITH THE ALUMINUM ASSOCIATION, INC. "SPECIFICATIONS FOR ALUMINUM STRUCTURES".

8.2 UNLESS NOTED OTHERWISE, MATERIALS SHALL BE:
a. PLATE & SHEET – ASTM B209; 6061-T6, 6061-T651 ALLOY.
b. EXTRUDED SHAPES – ASTM B221; 6061-T6, 6061-T651 ALLOY. PIPE SECTIONS ARE SCHEDULE 40 U.N.O..
c. CASTINGS – ASTM B108; 214 ALLOY.
d. BOLTS – ASTM 276; TYPE 316 STAINLESS STEEL.
e. NUTS – ASTM 276; TYPE 316 STAINLESS STEEL.

8.3 ALUMINUM SHALL BE SEPARATED FROM DIRECT CONTACT WITH OTHER MATERIALS (STEEL, CONCRETE, ETC.) BY PRESSURE SENSITIVE TAPE, BITUMASTIC COATING, OR OTHER PROTECTIVE METHOD SUBMITTED BY THE CONTRACTOR AND APPROVED BY THE OWNER'S CONSTRUCTION REPRESENTATIVE.

8.4 CONNECTIONS SHALL HAVE A MINIMUM OF TWO 3/4" DIAMETER TYPE SS316 BOLTS.

8.5 WELDING ALUMINUM SHALL CONFORM TO AWS D1.2 & AWS A5.10 AND THE REQUIREMENTS OF THE ALUMINUM ASSOCIATIONS "ALUMINUM DESIGN MANUAL" (LATEST EDITION) TABLE 7.1-1 FOR WELD FILLERS FOR WROUGHT ALLOYS.

8.6 REFERENCE PROJECT SPECIFICATIONS FOR HANDRAIL & GUARDRAIL REQUIREMENTS.

9.0 PRE-CAST CONCRETE

9.1 PRE-CAST CONCRETE TO BE DESIGNED BY THE PRE-CAST CONCRETE ROOF PANEL MANUFACTURER UTILIZING "DESIGN LOADS" PROVIDED ON THE RESPECTIVE FACILITY STRUCTURAL DRAWINGS. COORDINATE w/ THE BUILDING, ELECTRICAL, HVAC, MECHANICAL PLUMBING AND VENDOR EQUIPMENT DRAWINGS FOR ADDITIONAL MATERIALS REQUIRED FOR CALCULATION OF THE DEAD LOADS, LIVE LOADS AND EQUIPMENT LOADS, THAT MAY BE SUSPENDED FROM THE UNDERSIDE OF THE ROOFING PANELS.

9.2 PRE-CAST CONCRETE ROOF PANEL MANUFACTURER IS REQUIRED TO SUBMIT DRAWINGS AND CALCULATION PACKAGES SEALED, SIGNED AND DATED BY AN ENGINEER CURRENTLY LICENSED BY THE STATE OF FLORIDA. FABRICATION OF THE PRE-CAST ROOF PANELS SHOULD NOT OCCUR UNTIL "FINAL" APPROVAL OF THE MANUFACTURER'S DRAWINGS AND CALCULATIONS SUBMITTALS.

9.3 REFERENCE STRUCTURAL DRAWINGS FOR PRE-CAST CONCRETE ROOF PANEL SYSTEM FOR BEARING ELEVATIONS, DIMENSIONS, ROOF OPENINGS, EAVE HEIGHTS & ROOF SLOPE REQUIREMENTS.

9.4 REFERENCE STRUCTURAL DRAWINGS FOR ALL INTERIOR AND EXTERIOR ROOF PANEL FINISH REQUIREMENTS.

9.5 PRE-CAST ROOF PANELS SHALL HAVE A MINIMUM 28 DAY COMPRESSIVE STRENGTH OF 5,000 PSI.

9.6 REFERENCE ALL PROJECT SPECIFICATIONS RELATED TO THE PRE-CAST CONCRETE ROOF PANELS FOR ADDITIONAL REQUIREMENTS AND INFORMATION.

9.7 CONSTRUCTION ACTIVITIES RELATED TO THE PRE-CAST ROOF PANEL SHALL BE REVIEWED BY THE THE OWNER'S CONSTRUCTION REPRESENTATIVE.

10.0 ABBREVIATIONS

10.1 THE FOLLOWING LIST OF ABBREVIATIONS IS NOT INTENDED TO REPRESENT ALL THOSE USED ON THE DRAWINGS, BUT TO SUPPLEMENT THE MORE COMMON ABBREVIATIONS USED.

ADD'L	=	ADDITIONAL
AL	=	ALUMINUM
ALT.	=	ALTERNATE
BLDG.	=	BUILDING
BLK.	=	BLOCK
BM.	=	BEAM
B.O.	=	BOTTOM OF
BRG.	=	BEARING
C.I.P.	=	CAST-IN-PLACE
C.J.	=	CONTRACTION JOINT
CLR.	=	CLEAR
CMU	=	CONC. MASONRY UNIT
COL.	=	COLUMN
CONC.	=	CONCRETE
CONN.	=	CONNECTION
CONST.	=	CONSTRUCTION
CONT.	=	CONTINUOUS
COORD.	=	COORDINATE
CTR.	=	CENTER
CTR'D.	=	CENTERED
DBL.	=	DOUBLE
DIR.	=	DIRECTION
DWG.'s.	=	DRAWINGS
EA.	=	EACH
EL.	=	ELEVATION
E.O.	=	EDGE OF
E.Q. EQUIP.	=	EQUIPMENT
EXIST.	=	EXISTING
EXP.	=	EXPANSION
FLG.	=	FLANGE
FDN.	=	FOUNDATION
F.S.	=	FAR SIDE
FT.	=	FEET
FTG.	=	FOOTING
GA.	=	GAGE
GALV.	=	GALVANIZED
HK.	=	HOOK
H.P.	=	HIGH POINT
I/F	=	INSIDE FACE
INFO.	=	INFORMATION
INTR.	=	INTERIOR
JST.	=	JOIST
JT.	=	JOINT
LLH	=	LONG LEG HORIZONTAL
LLV	=	LONG LEG VERTICAL
L.P.	=	LOW POINT
LSL	=	LONG SLOTTED
HRS.	=	MASONRY
MAT'L.	=	MATERIAL
MFG.	=	MANUFACTURER
MIN.	=	MINIMUM
MTL.	=	METAL
NOM.	=	NOMINAL
N.S.	=	NEAR SIDE
N.T.S.	=	NOT TO SCALE
O.C.	=	ON CENTER
O/F	=	OUTSIDE FACE
O/H	=	OVERHANG
O/O	=	OUT TO OUT
OPNG.	=	OPENING
OPP.	=	OPPOSITE
ORIENT.	=	ORIENTATION
PLCS.	=	PLACES
RAD.	=	RADIUS
REF.	=	REFERENCE
REINF.	=	REINFORCING
REQ'D.	=	REQUIRED
RET.	=	RETAINING
ROT.	=	ROTATE
SIM.	=	SIMILAR
SPA.	=	SPACED
SPECS.	=	SPECIFICATIONS
S.S.	=	STAINLESS STEEL
SSL	=	SHORT SLOTTED
STD.	=	STANDARD
STL.	=	STEEL
T&B	=	TOP & BOTTOM
T/D	=	TURN DOWN
THK.	=	THICK
THK'D	=	THICKENED
T.O.	=	TOP OF
T.O.S	=	TOP OF SLAB
TYP.	=	TYPICAL
U.N.O.	=	UNLESS NOTED OTHERWISE
VERT.	=	VERTICAL
W.A.	=	WORK POINT

DESIGN LOADS:

1. FLOOR LIVE LOAD 250 PSF U.N.O.
2. ROOF LIVE LOAD 30 PSF
3. STAIR, PLATFORMS AND WALKWAYS 100 PSF U.N.O.
4. WIND LOAD:
   A. ULTIMATE WIND SPEED 158 MPH
   B. EXPOSURE CATEGAORY C
   C. RISK CATEGORY IV
   D. ENCLOSURE CLASSIFICATION: ENCLOSED
   E. INTERNAL PRESSURE COEFFIEIENT +/– 0.18
   F. COMPONENTS AND CLADDING PRESSURE: BY COVER MANUFACTURER
5. DESIGN IN ACCORDANCE WITH ASCE 7-10 AND 2017 FLORIDA BUILDING CODE.

DESIGN CRITERIA:

CONCRETE 28 DAY COMPRESSIVE STRENGTH:	
SLAB-ON-GRADE:	f'c = 4,500 psi
EQUIPMENT PADS, PIPE ENCASEMENTS:	f'c = 4,500 psi
WALLS OF LIQUID CONTAINMENT STUCTURES (LCS):	f'c = 4,500 psi
SLABS OF LCS:	f'c = 4,500 psi
FOOTINGS:	f'c = 4,500 psi
BELOW GRADE & RETAINING WALLS:	f'c = 4,500 psi
SIDEWALK, DRIVEWAY, CURB & GUTTER:	f'c = 3,000 psi
REINFORCING STEEL:	ASTM A615, GRADE 60
WELDED WIRE FABRIC:	ASTM A185
STRUCTURAL STEEL:	REF. STRUCTURAL NOTE 8.1
ALUMINUM:	REF. STRUCTURAL NOTE 9.2
BOLTS SHALL BE 3/4"ø TYPE 316 S.S.:	REF. STRUCTURAL NOTES 9.2.d
ANCHOR BOLTS SHALL BE 3/4"ø TYPE 316 S.S.:	REF. STRUCTURAL NOTE 8.8
STEEL ELECTRODES SHALL CONFORM TO:	AWS 5.5 E70XX
STEEL ELECTRODES SHALL CONFORM TO:	AWS 5.5 E70XX
ALUMINUM WELD FILLERS ALLOYS SHALL CONFORM TO:	AWS A5.10 (REF. STRUCTURAL NOTE 9.5)
SOIL BEARING CAPACITY:	REF. STRUCTURAL NOTE 3.1

LEGEND:

ENLARGED PLAN AREA, DETAIL	=
CONC. MASONRY BLOCK	=
CONC. WALL, PAD, ETC.	=
GROUT	=
GRATING	=
DETAIL OR SECTION NO./SHEET NO. REFERENCE	= X.SYYY
PROJECT NORTH	= NORTH
ELEVATION DATUM	=
ELEVATION NO./SHEET NO. REFERENCE	= X.SYYY

REV.NO.	DESCRIPTIONS	DATE
	REVISIONS	

H. A. HOBI LICENSE No 59360 STATE OF FLORIDA PROFESSIONAL ENGINEER
6-13-19
H. A. HOBI, P.E.
No. 59360

SEAL

McKIM&CREED
1365 Hamlet Avenue
Clearwater, Florida 33756
Phone: (727)442-7196, Fax: (727)461-3827
CA LIC No. 29588
www.mckimcreed.com

Manatee County FLORIDA

SWWRF
CCC REHAB AND
RECHARGE WELL PS PROJECT

STRUCTURAL NOTES AND LEGEND

DATE:	JUNE, 2019
MCE PROJ. #	1024-0171
DRAWN	CN
DESIGNED	HAH
CHECKED	JV
PROJ. MGR.	TP

SCALE
HORIZONTAL: NA
VERTICAL: NA

DRAWING NUMBER
S-01

STATUS: ISSUED FOR BID
REVISION

S:\1024\0171\80-Drawings\STRUCTURAL\S-01 1024017T.dwg, 6/13/2019 2:48:48 PM, Carlos Nogueiro

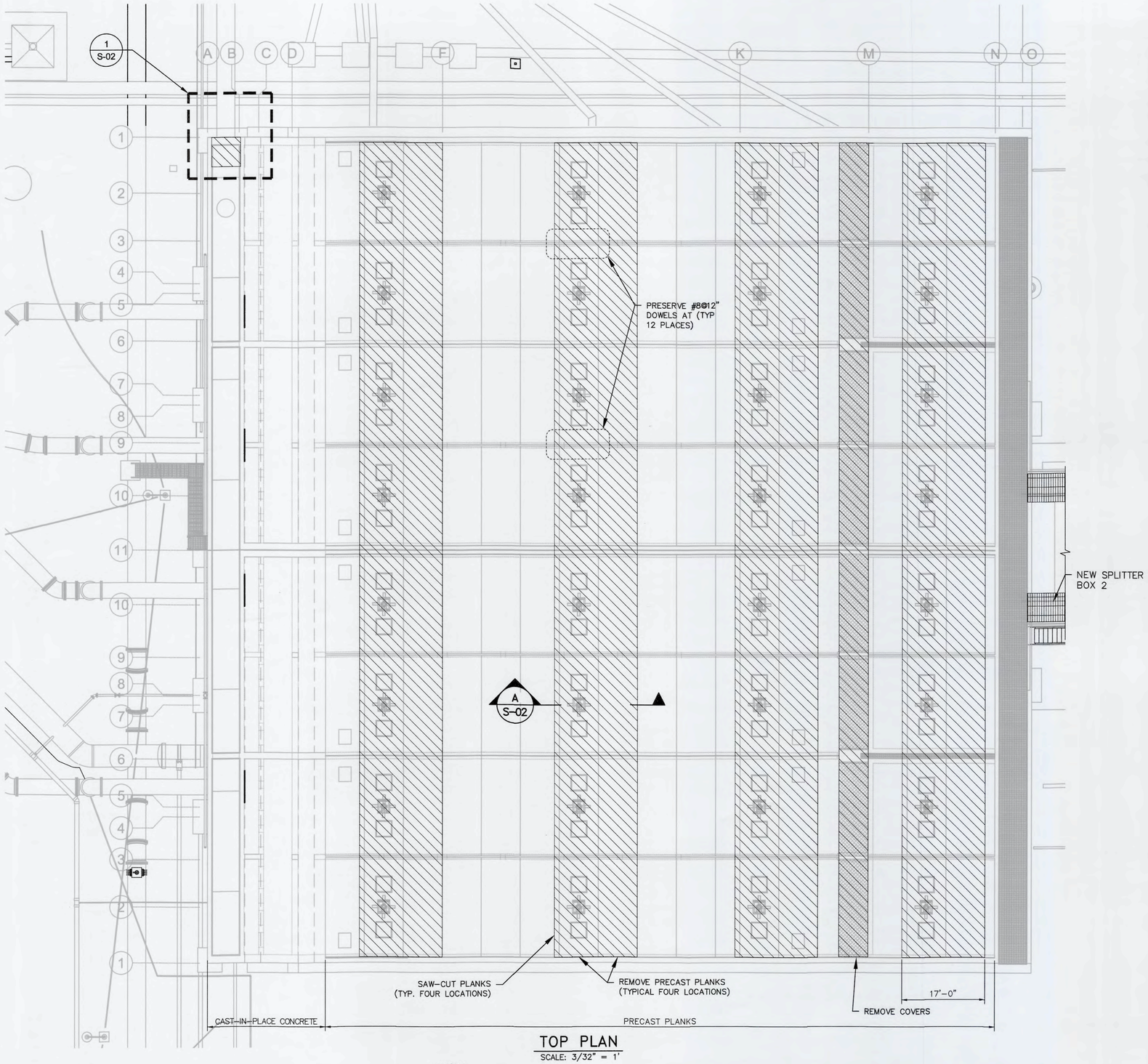

TOP PLAN

SCALE: 3/32" = 1'

DEMOLITION NOTES

1. COMPLETELY REMOVE CONCRETE PLANKS WITHIN DEMOLITION BOUNDARY AND DEMO OTHER CONCRETE AS SHOWN ON THIS DRAWING.
2. CONTRACTOR SHALL BE RESPONSIBLE FOR STABILITY OF EXISTING STRUCTURES DURING DEMO ACTIVITIES.
3. CONTRACTOR SHALL BE RESPONSIBLE FOR ALL TEMPORARY SHORING IF REQUIRED. CONTRACTOR SHALL PROVIDE TEMPORARY SHORING DESIGN AND CALCULATIONS SIGNED AND SEALED BY A FLORIDA PE FOR REVIEW BY ENGINEER PRIOR TO DEMOLITION.
4. CONTRACTOR SHALL BE RESPONSIBLE FOR DAILY REMOVAL AND PROPER DISPOSAL OF ALL DEMOLISHED CONCRETE AND ALL OTHER MATERIALS.
5. CONTRACTOR SHALL BE RESPONSIBLE FOR APPLYING EFFECTIVE DUST CONTROL MEASURES DURING DEMOLITION.
6. ALL DEMOLITION WORK SHALL BE PERFORMED IN ACCORDANCE WITH STATE AND LOCAL CODES, SAFETY REGULATIONS AND REQUIREMENTS OF AUTHORITIES HAVING JURISDICTION.
7. ALL POWER AND WATER SERVICES SHALL BE DISCONNECTED PRIOR TO START OF DEMOLITION.
8. CONTRACTOR SHALL PROVIDE ALL LABOR, MATERIAL, EQUIPMENT AND SERVICES AND PERFORM ALL OPERATIONS REQUIRED FOR DEMOLITION AS SHOWN ON THIS DRAWING.
9. A COPY OF THE RECORD DRAWINGS WILL BE AVAILABLE AS PART OF THE BID DOCUMENTS. THE INFORMATION PROVIDED IS FOR THE CONTRACTOR'S USE AT HIS OR HER SOLE DISCRETION AND MANATEE COUNTY AND MCKIM AND CREED, INC. ASSUME NO RESPONSIBILITY FOR THE ACCURACY AND INFORMATION REFLECTED IN THE DRAWINGS.
10. CUT BACK ALL EXPOSED REINFORCEMENT A MINIMUM ONE INCH AND COAT ALL SURFACES WITH SIKA ARMATIC-110 FILL HOLE WITH EPOXY GROUT SIKAOUR 42 OF EQUAL. THIS APPLIES TO ALL CONCRETE SURFACES WITH EXPOSED REINFORCEMENT.

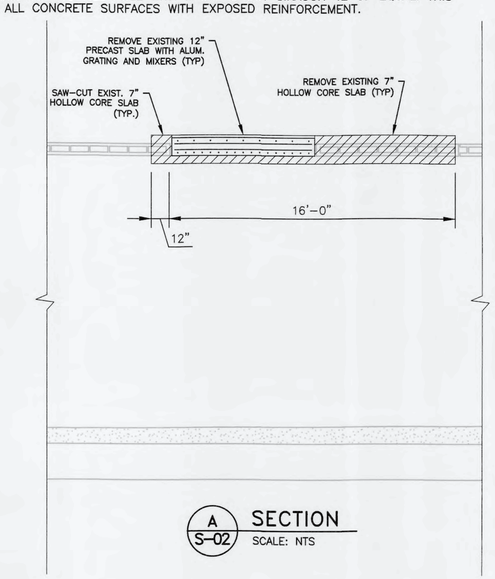

A S-02 SECTION

SCALE: NTS

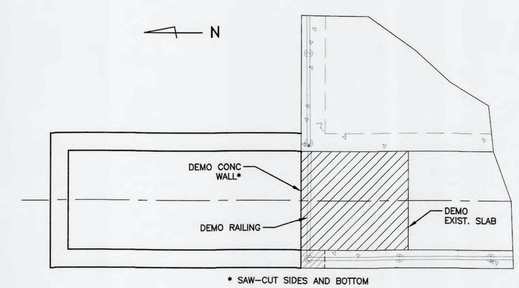

1 S-02 CHANNEL WALL DEMO

SCALE: NTS

LEGEND:

EXISTING TO BE REMOVED

REV.NO.	DESCRIPTIONS	DATE

REVISIONS

H. A. HOBI, P.E.
No. 59360

McKIM&CREED
1365 Hamlet Avenue
Clearwater, Florida 33756
Phone: (727)442-7196, Fax: (727)461-3827
CA LIC No. 29588
www.mckimcreed.com

Manatee County FLORIDA

SWWRF
CCC REHAB AND
RECHARGE WELL PS PROJECT

ANOXIC BASINS DEMOLITION TOP AND ENLARGED PLANS

DATE:	JUNE, 2019
MCE PROJ. #	1024-0171
DRAWN	CN
DESIGNED	HAH
CHECKED	JV
PROJ. MGR.	TP

SCALE
HORIZONTAL: NA
VERTICAL: NA

DRAWING NUMBER
S-02

STATUS: ISSUED FOR BID

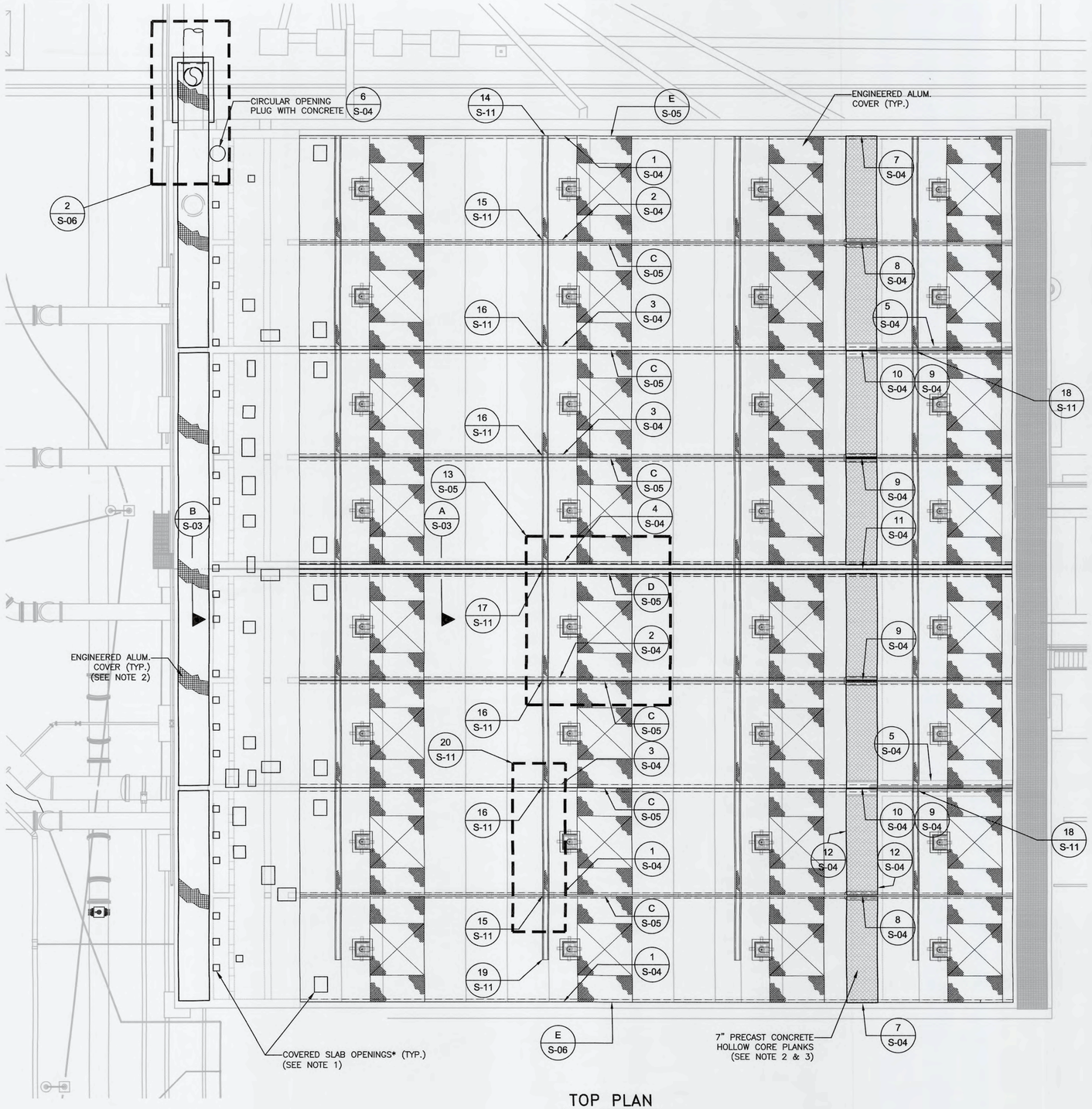

* OPENING LOCATION AND SIZE SHALL BE VERIFIED.

TOP PLAN

SCALE: 3/32" = 1'

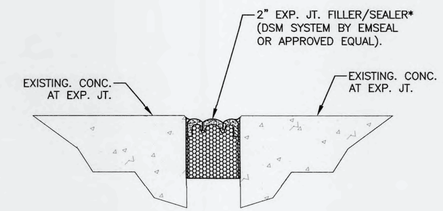

* FIELD VERIFY JOINT WIDTH BEFORE INSTALLATION.

A / S-03 CENTER EXPANSION JOINT FILLER/SEALER

SCALE: NTS

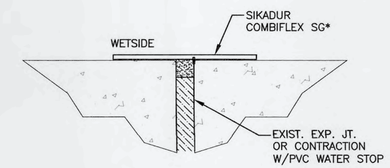

* SEE NOTE 7

B / S-03 LEAKING JOINT REPAIR DETAIL

SCALE: NTS

NOTES:

1. USE ENGINEERED ALUMINUM COVERS FOR FLOOR OPENINGS WITH PLATE COVERS.
2. FLOOR LIVE LOAD 50 PSF.
3. IF 7" PRECAST CONCRETE HOLLOW CORE PLANKS ARE NOT AVAILABLE USE 8" HOLLOW CORE PLANKS AND MODIFY END SUPPORTS ACCORDINGLY.
4. CONTRACTOR SHALL VERIFY ALL EXISTING DIMENSIONS AND ELEVATIONS THAT AFFECT NEW CONSTRUCTION PRIOR START OF WORK.
5. CONTRACTOR SHALL BE RESPONSIBLE FOR THE PROTECTION OF EXISTING STRUCTURES DURING CONSTRUCTION.
6. REFERENCED DETAILS SHOWN AT SECOND LINE OF MIXERS APPLY TO ALL FOUR MIXER LINES.
7. USE SIKADUR COMBIFLEX SG SYSTEM AT ANY LEAKING EXPANSION OR CONTRACTION JOINT WITH PVC WATER STOP. MANUF. INSTRUCTIONS SHALL BE STRICTLY FOLLOWED.

REV.NO.	DESCRIPTIONS	DATE
	REVISIONS	

H. A. HOBI, P.E. No. 59360

SEAL

McKIM&CREED
1365 Hamlet Avenue
Clearwater, Florida 33756
Phone: (727)442-7196, Fax: (727)461-3827
CA LIC No. 29588
www.mckimcreed.com

Manatee County FLORIDA

SWWRF CCC REHAB AND RECHARGE WELL PS PROJECT

ANOXIC BASIN CHANNEL EXTENSION AND ANOXIC BASIN TOP PLAN

DATE:	JUNE, 2019
MCE PROJ. #	1024-0171
DRAWN	CN
DESIGNED	HAH
CHECKED	JV
PROJ. MGR.	TP

SCALE: HORIZONTAL: NA VERTICAL: NA

DRAWING NUMBER: S-03

STATUS: ISSUED FOR BID

REVISION

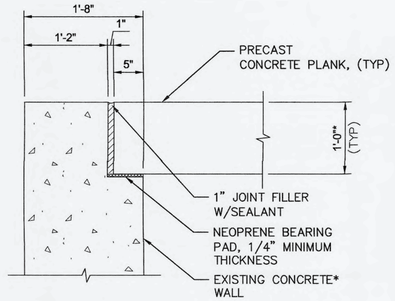

* SAW-CUT SUPPORT WALL AS REQUIRED SO THAT TOP OF PRECAST CONCRETE PLANK MATCHES TOP OF EXISTING WALL.

1 S-03 DETAIL
1"=1'-0"

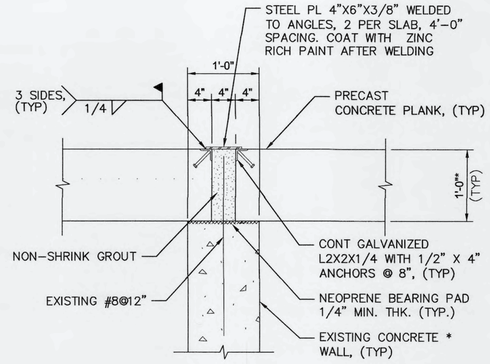

* SAW-CUT SUPPORT WALL AS REQUIRED SO THAT TOP OF PRECAST CONCRETE PLANKS MATCHES TOP OF EXISTING ADJACENT PLANKS.

2 S-03 DETAIL
1"=1'-0"

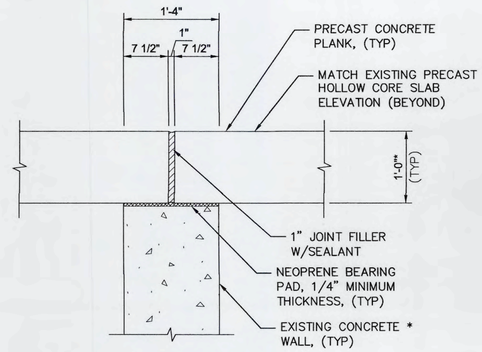

* SAW-CUT TOP OF SUPPORT WALL AS REQUIRED SO THAT TOP OF PRECAST CONCRETE PLANKS MATCHES TOP OF EXISTING ADJACENT PLANKS.

3 S-03 DETAIL
1"=1'-0"

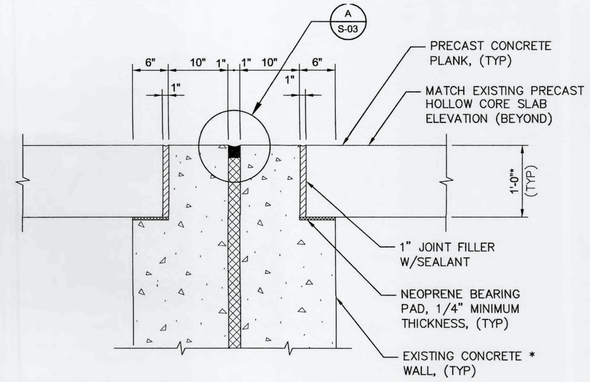

* SAW-CUT SUPPORT WALLS AS REQUIRED SO THAT TOP OF PRECAST CONCRETE PLANKS MATCHES TOP OF EXISTING WALLS.

4 S-03 DETAIL
1"=1'-0"

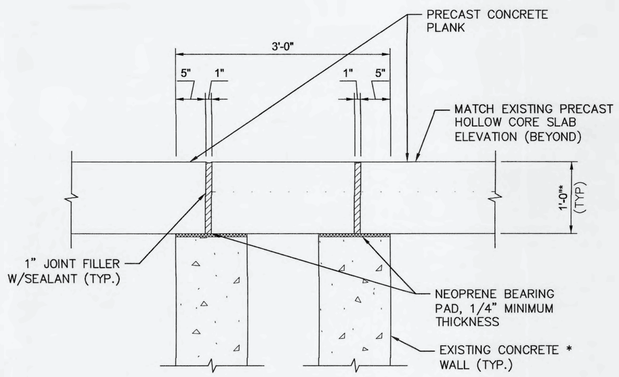

* SAW-CUT SUPPORT WALLS AS REQUIRED SO THAT TOP OF PRECAST CONCRETE PLANKS MATCHES TOP OF EXISTING ADJACENT PLANKS.

5 S-03 DETAIL
1"=1'-0"

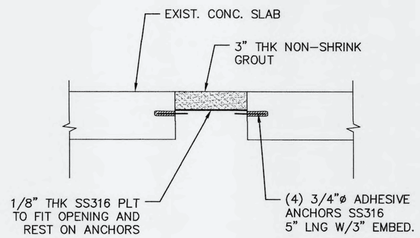

6 S-03 DETAIL
1"=1'-0"

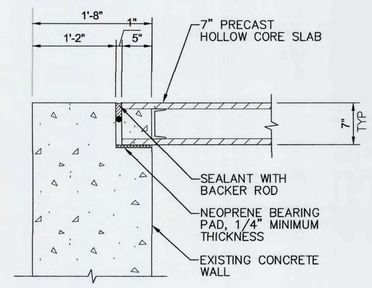

7 S-03 DETAIL
1"=1'-0"

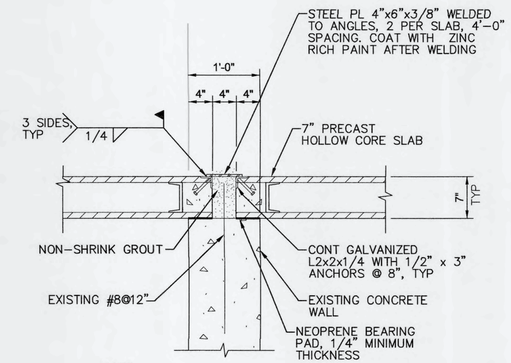

NOTE:
IF CONCRETE PLANKS ARE CAST-IN-PLACE, PLANKS SHALL BE CONTINUOUS OVER SUPPORT. DELETE GROUT AND EMBEDS.

8 S-03 DETAIL
1"=1'-0"

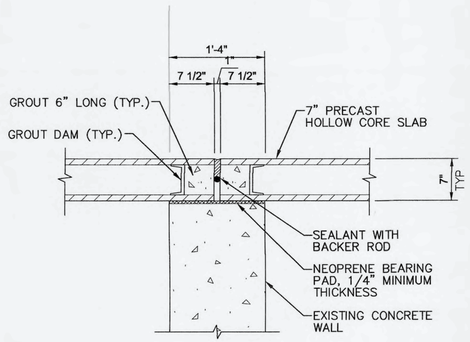

9 S-03 DETAIL
1"=1'-0"

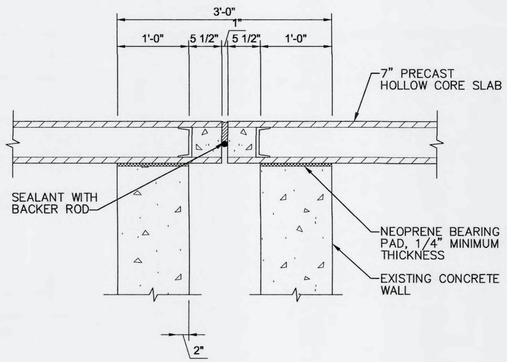

10 S-03 DETAIL
1"=1'-0"

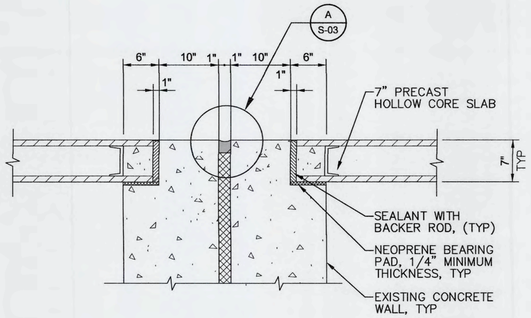

11 S-03 DETAIL
1"=1'-0"

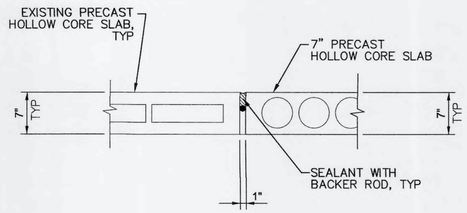

12 S-03 DETAIL
1"=1'-0"

REV.NO.	DESCRIPTIONS	DATE

REVISIONS

H. A. HOBI LICENSE No 59360 STATE OF FLORIDA PROFESSIONAL ENGINEER
6-13-19
H. A. HOBI, P.E.
No. 59360
SEAL

SEAL

McKIM&CREED
1365 Hamlet Avenue
Clearwater, Florida 33756
Phone: (727)442-7196, Fax: (727)461-3827
CA LIC No. 29588
www.mckimcreed.com

Manatee County FLORIDA

SWWRF
CCC REHAB AND
RECHARGE WELL PS PROJECT

ANOXIC BASIN
DETAILS

DATE:	JUNE, 2019
MCE PROJ. #	1024-0171
DRAWN	CN
DESIGNED	HAH
CHECKED	JV
PROJ. MGR.	TP

SCALE
HORIZONTAL: NA
VERTICAL: NA

DRAWING NUMBER
S-04

STATUS: ISSUED FOR BID
REVISION

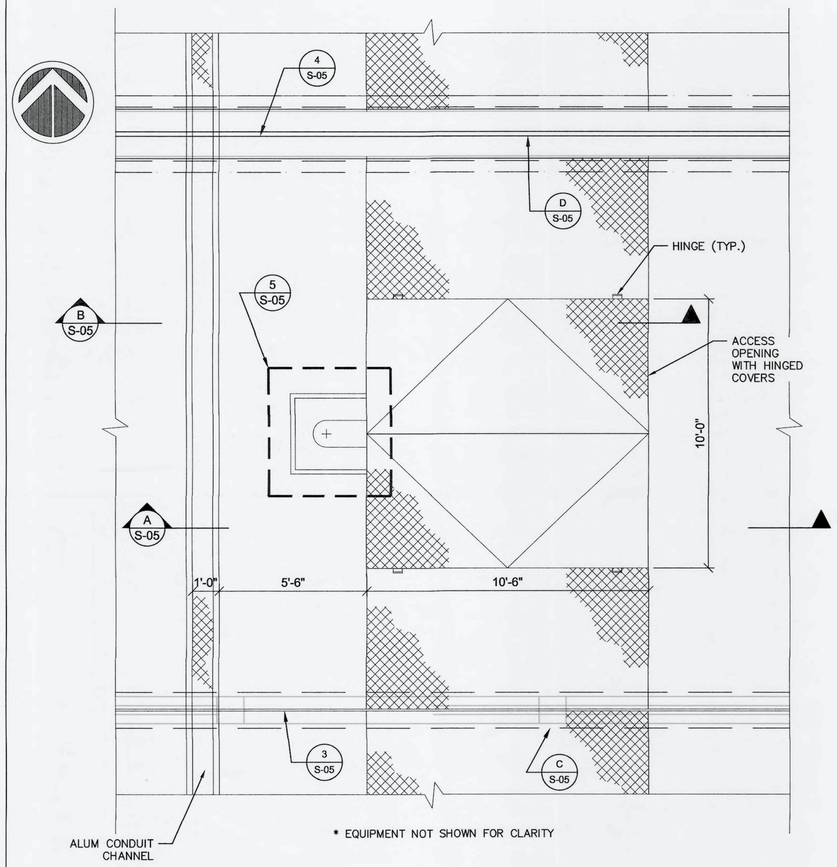

13 S-03 DETAIL
SCALE: NTS

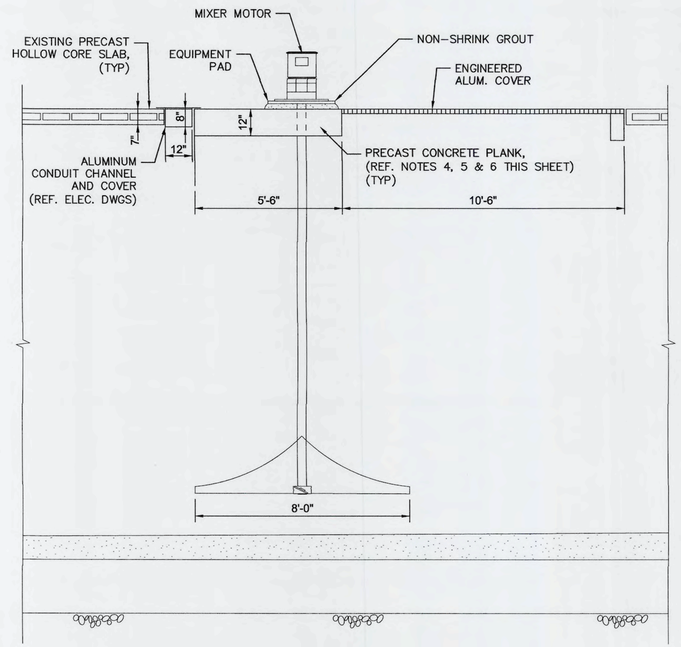

A S-05 SECTION
3/8"=1'-0"

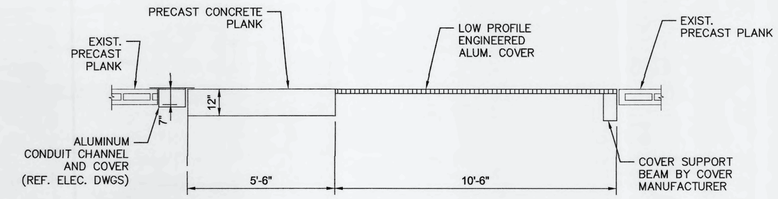

B S-05 SECTION
SCALE: NTS

MIXER LOADS:

1. TOTAL MIXER WEIGHT 816 LB.
2. RATED TORQUE 665 LB–FT.
3. START–UP TORQUE 2259 LB–FT.
4. STATIC AXIAL FORCE 816 LB.
5. DYNAMIC AXIAL FORCE 429 LB.

NOTES:

1. THE STEEL BASE PLATE SHALL SET BE GALVANIZED AND SET ON NON–SHRINK GROUT.
2. THE STEEL BASE PLATE SHALL BE FIELD DRILLED AND HOLES THREADED TO ALLOW THE EQUIPMENT BASE PLATE TO BE BOLTED TO IT.
3. CONTRACTOR SHALL BE RESPONSIBLE FOR ADJUSTING THE EQUIPMENT PAD AND GROUT HEIGHT TO MAINTAIN EXISTING EQUIPMENT ELEVATION.
4. CONTRACTOR SHALL BE RESPONSIBLE FOR ENGINEERING PRODUCTION AND INSTALLATION OF THE PRECAST CONCRETE PLANKS USED FOR MIXER SUPPORT.
5. CONTRACTOR SHALL SUBMIT MIXER SUPPORT PRECAST PLANKS SHOP DRAWINGS AND CALCULATIONS SIGNED AND SEALED BY A FLORIDA PROFESSIONAL ENGINEER FOR REVIEW BY ENGINEER.
6. THE MIXER SUPPORT PRECAST PLANKS SHALL BE DESIGNED FOR DEAD LOAD AND 50 PSF LIVE LOAD IN ADDITION TO STATIC AND DYNAMIC LOADS GENERATED BY THE MIXER. ALSO, PRECAST PLANKS SHALL BE DESIGNED TO SUPPORT THE DEAD AND LIVE LOADS GENERATED BY THE ENGINEERED ALUMINUM COVERS AND CONDUIT CHANNEL.
7. STEEL BASE PLATE SHALL ACCOMMODATE EXISTING EQUIPMENT.

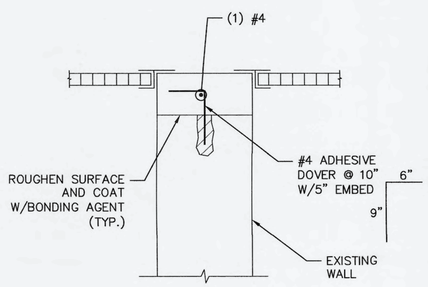

C S-03 SECTION
SCALE: NTS

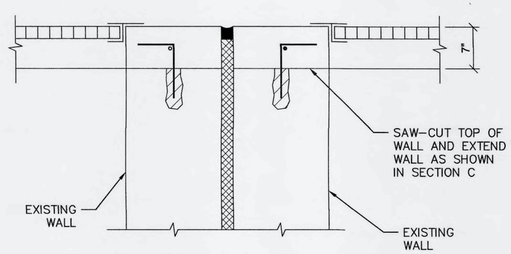

D S-03 SECTION
SCALE: NTS

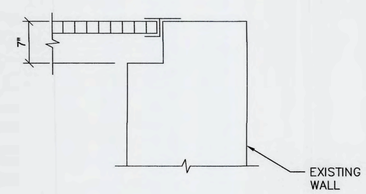

E S-03 SECTION
SCALE: NTS

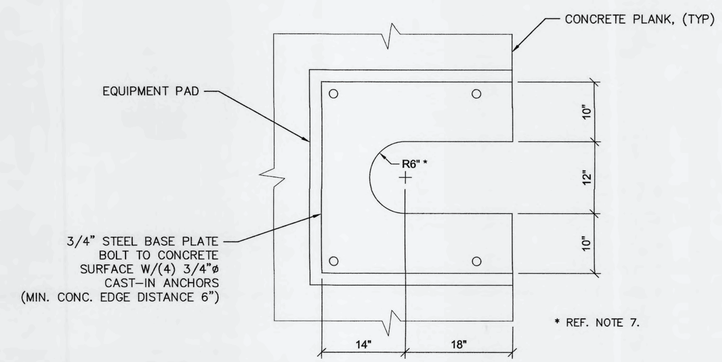

5 S-05 MIXER SHAFT CUT–OUT
1"=1'-0"

REV.NO.	DESCRIPTIONS	DATE
	REVISIONS	

H. A. HOBI LICENSE No 59360 STATE OF FLORIDA PROFESSIONAL ENGINEER SEAL
H. A. HOBI, P.E.
No. 59360

SEAL

McKIM&CREED
1365 Hamlet Avenue
Clearwater, Florida 33756
Phone: (727)442–7196, Fax: (727)461–3827
CA LIC No. 29588
www.mckimcreed.com

Manatee County FLORIDA

SWWRF
CCC REHAB AND
RECHARGE WELL PS PROJECT

ANOXIC BASIN MIXER SHAFT OPENING
PLAN SECTIONS AND DETAILS

DATE:	JUNE, 2019
MCE PROJ. #	1024–0171
DRAWN	CN
DESIGNED	HAH
CHECKED	JV
PROJ. MGR.	TP

SCALE
HORIZONTAL: NA
VERTICAL: NA

DRAWING NUMBER
S-05

STATUS: ISSUED FOR BID
REVISION

NOTES:

1. USE GREEN STREAK 609 RETROFIT PVC WATER STOP OR APPROVED EQUAL.
2. USE RETROFIT PVC WATERSTOP AND SMOOTH DOWELS AT WALLS AND SLAB JOINTS.
3. PROVIDE 3" CONC COVER OVER REINF. AT PVC WATERSTOP LOCATIONS.
4. REFERENCE DRAWINGS S-10 THROUGH S-14 FOR TYPICAL REINFORCING AND RAILING DETAILS.
5. CHANNEL EXTENSIONS ON TOP OF WALL AND BOTTOM OF CHANNEL ELEVATIONS SHALL MATCH EXISTING CHANNEL ELEVATIONS.
6. CONTRACTOR SHALL VERIFY ALL DIMENSIONS AND ELEVATIONS THAT AFFECT NEW CONSTRUCTION PRIOR TO START WORK.
7. CONTRACTOR SHALL BE RESPONSIBLE FOR THE PROTECTION OF EXISTING STRUCTURES DURING CONSTRUCTION.
8. CONCRETE STRENGTH F'c=4500 PSI W/TYPE II, ASTM C150 CEMENT AND MAXIMUM 20% BY WEIGHT SLAG AND/OR FLY ASH CONTENT.

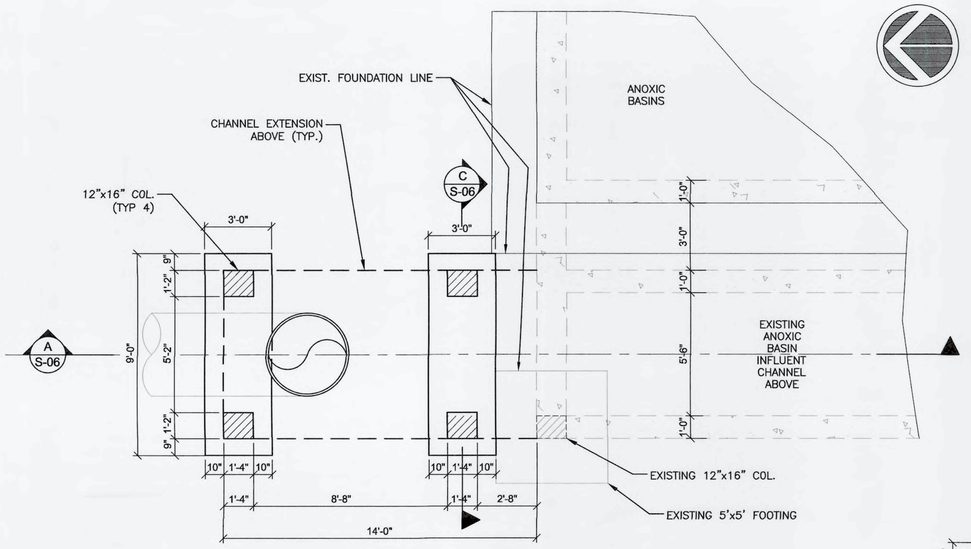

1 S-06 CHANNEL EXTENSION FOUNDATION PLAN
SCALE: 5/16" = 1'

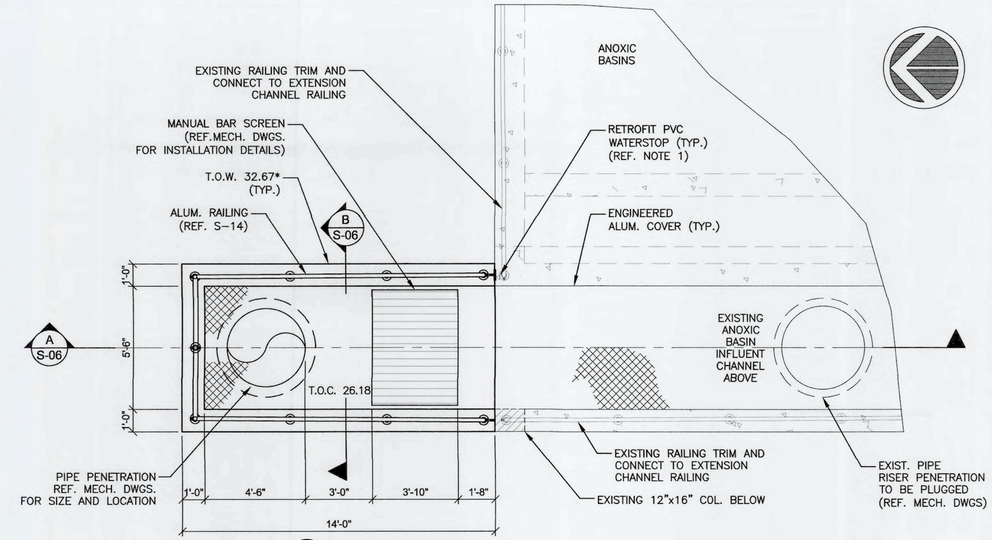

* FIELD VERIFY DIMENSIONS AND ELEVATIONS

2 S-03 CHANNEL EXTENSION PLAN
SCALE: 5/16" = 1'

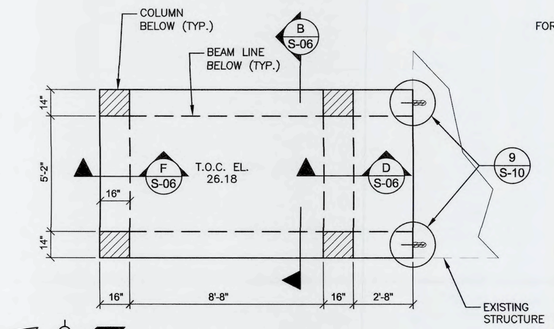

ELEVATED SLAB PLAN AT EL 27.17
SCALE: NTS

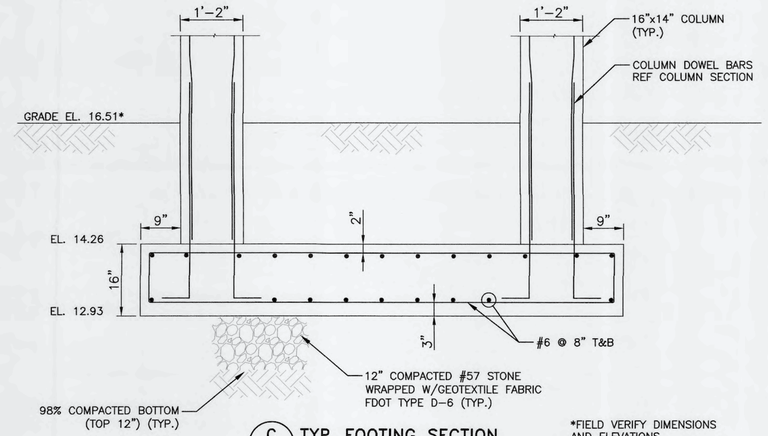

C S-06 TYP. FOOTING SECTION
SCALE: NTS

*FIELD VERIFY DIMENSIONS AND ELEVATIONS

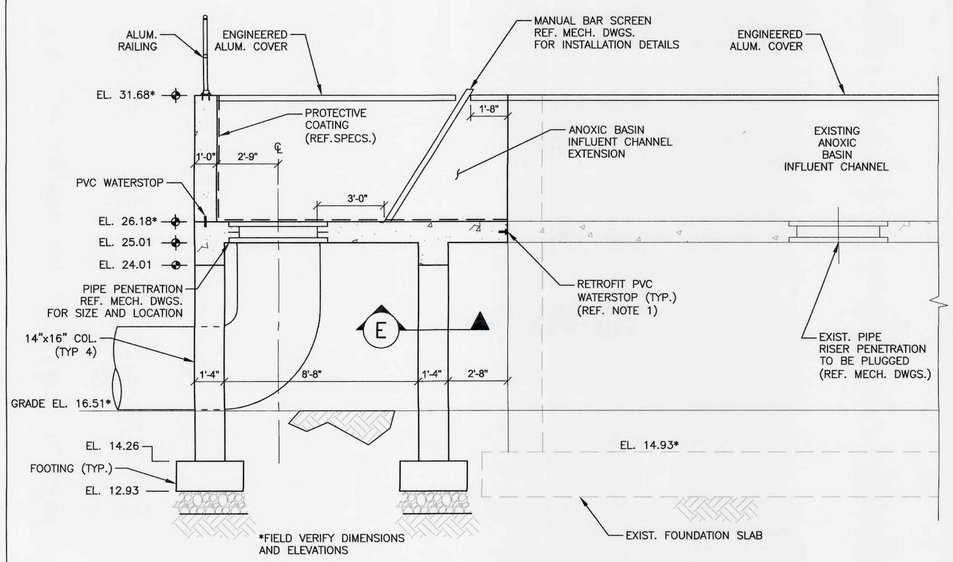

*FIELD VERIFY DIMENSIONS AND ELEVATIONS

A S-06 CHANNEL EXTENSION SECTION
SCALE: 5/16" = 1'

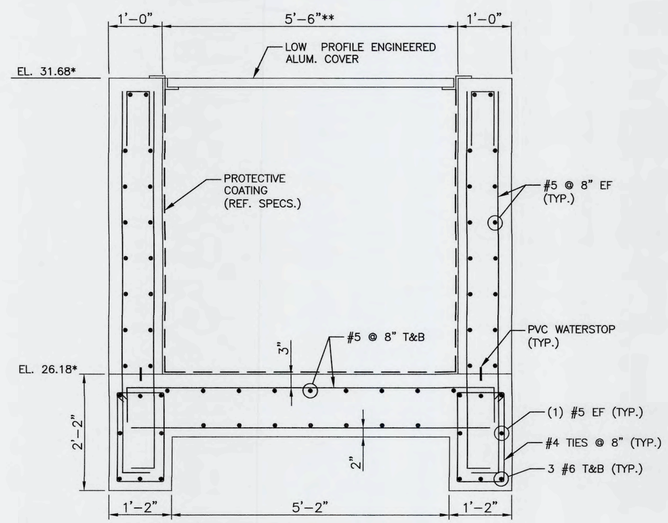

* FIELD VERIFY DIMENSIONS AND ELEVATIONS.
** MATCH EXISTING CHANNEL WIDTH.

B S-06 CHANNEL EXTENSION SECTION
SCALE: NTS

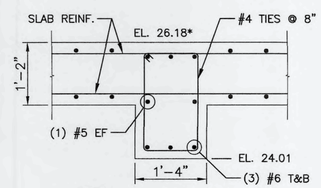

D S-06 BEAM SECTION
SCALE: NTS

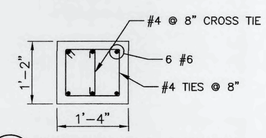

E S-06 TYP. COLUMN SECTION
SCALE: NTS

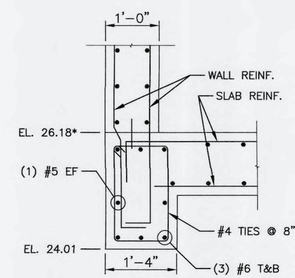

F S-06 END BEAM SECTION
SCALE: NTS

*FIELD VERIFY DIMENSIONS AND ELEVATIONS

REV.NO.	DESCRIPTIONS	DATE
	REVISIONS	

SEAL: H. A. HOBI, LICENSE No 59360, STATE OF FLORIDA, PROFESSIONAL ENGINEER — 6-11-19
H. A. HOBI, P.E. No. 59360

SEAL

McKIM&CREED
1365 Hamlet Avenue
Clearwater, Florida 33756
Phone: (727)442-7196, Fax: (727)461-3827
CA LIC No. 29588
www.mckimcreed.com

Manatee County FLORIDA

SWWRF
CCC REHAB AND
RECHARGE WELL PS PROJECT

ANOXIC BASIN CHANNEL
EXTENSION PLANS AND SECTIONS

DATE:	JUNE, 2019
MCE PROJ. #	1024-0171
DRAWN	CN
DESIGNED	HAH
CHECKED	JV
PROJ. MGR.	TP

SCALE
HORIZONTAL: NA
VERTICAL: NA

DRAWING NUMBER
S-06

STATUS: ISSUED FOR BID
REVISION

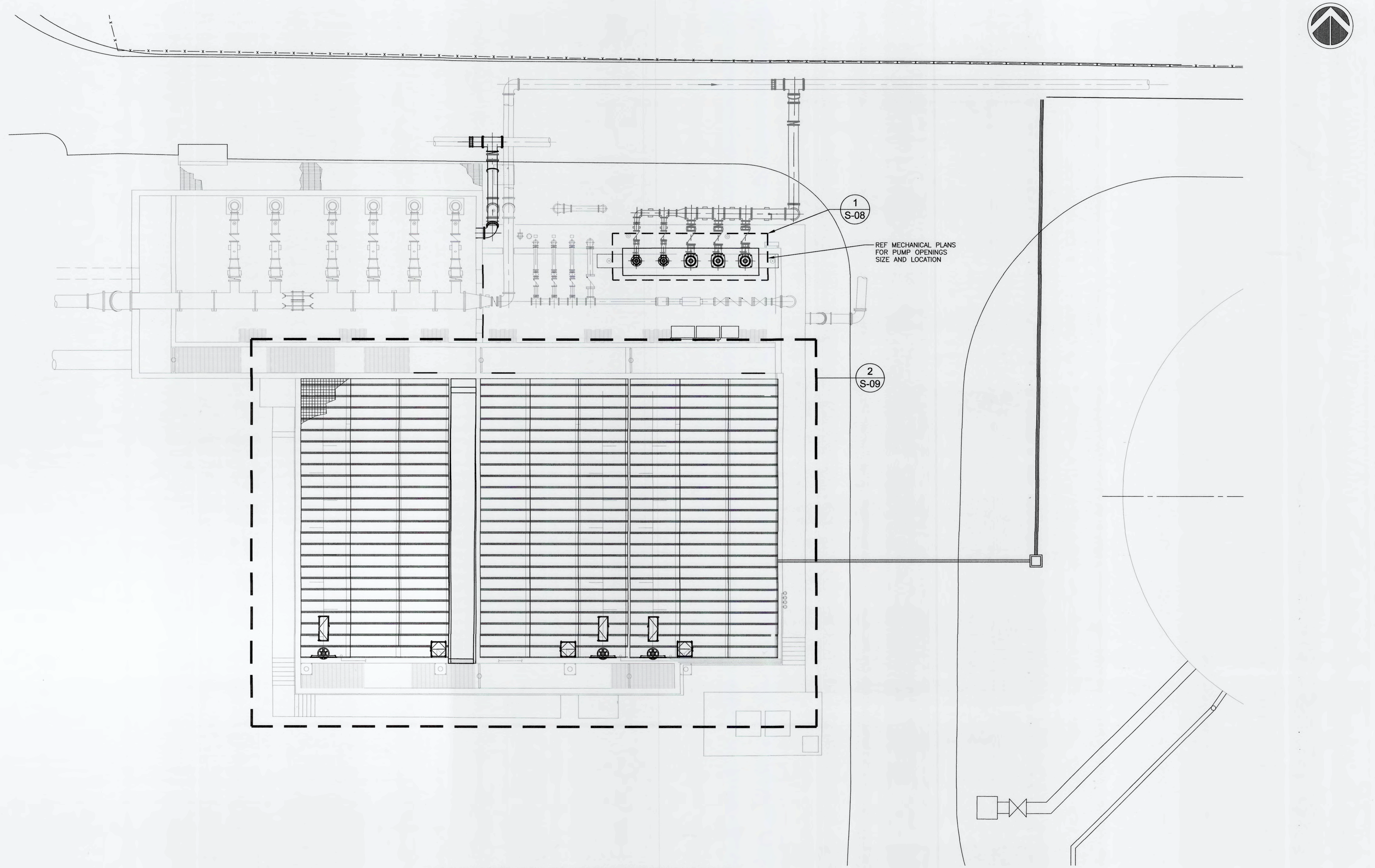

CCC COVER PLAN AND RECHARGE WELL PUMP STATION PLAN

SCALE: 1" = 10'

REV.NO.	DESCRIPTIONS	DATE

REVISIONS

H. A. HOBI, P.E.
No. 59360

SEAL

McKIM&CREED
1365 Hamlet Avenue
Clearwater, Florida 33756
Phone: (727)442-7196, Fax: (727)461-3827
CA LIC No. 29588
www.mckimcreed.com

Manatee County FLORIDA

SWWRF
CCC REHAB AND
RECHARGE WELL PS PROJECT

CCC COVER PLAN AND RECHARGE WELL PUMP STATION PLAN

DATE:	JUNE, 2019
MCE PROJ. #	1024-0171
DRAWN	CN
DESIGNED	HAH
CHECKED	JV
PROJ. MGR.	TP

SCALE
HORIZONTAL: NA
VERTICAL: NA

DRAWING NUMBER
S-07

STATUS: ISSUED FOR BID
REVISION

\\mckimcreed.com\nasuni\Data\File_Server_Data\FTM1\Projects\1024\0171\80-Drawings\STRUCTURAL\S-07 10240171.dwg, 6/13/2019 2:51:05 PM, Carlos Najarro

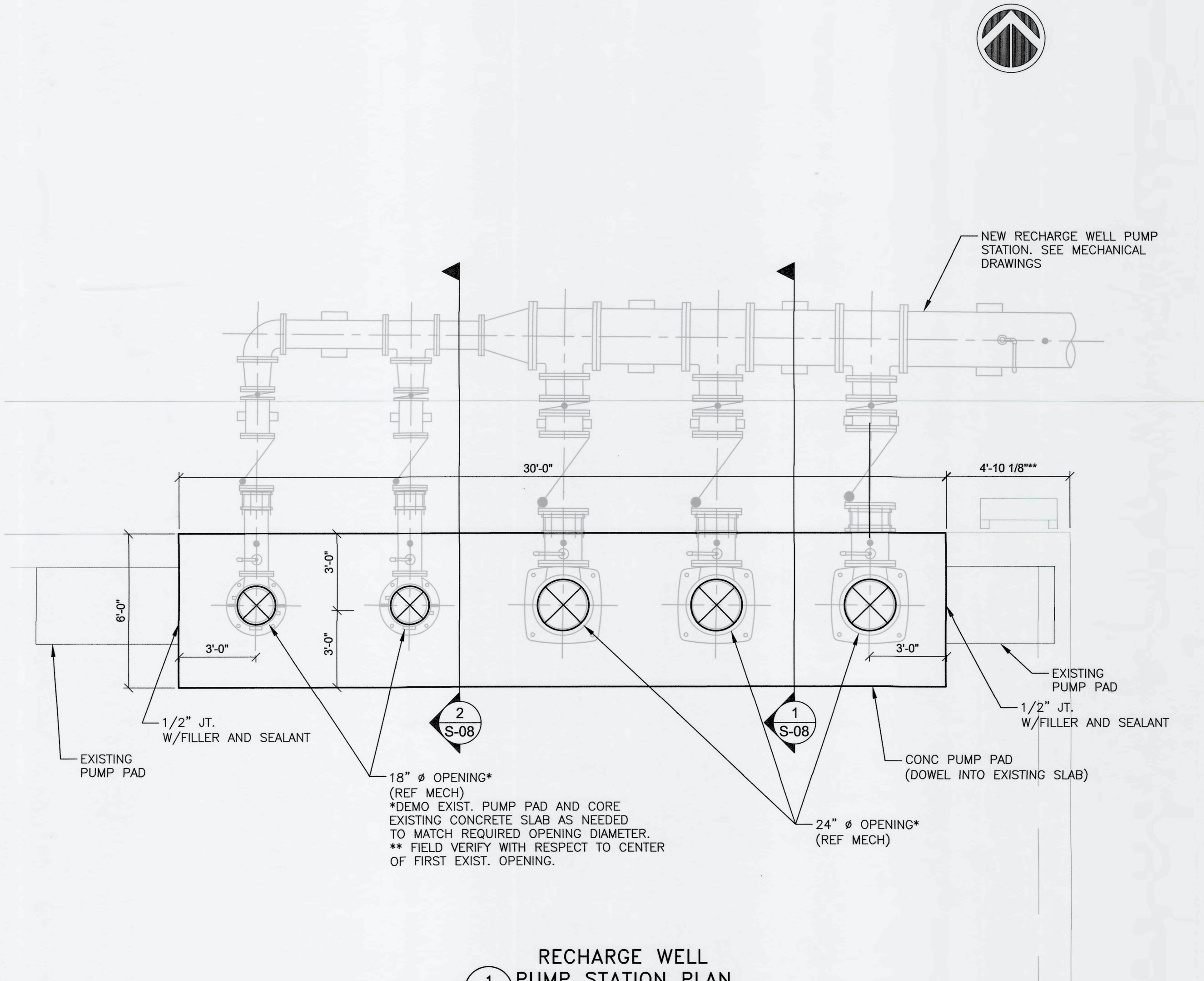

1 S-07 RECHARGE WELL PUMP STATION PLAN
SCALE: 3/8" = 1'-0"

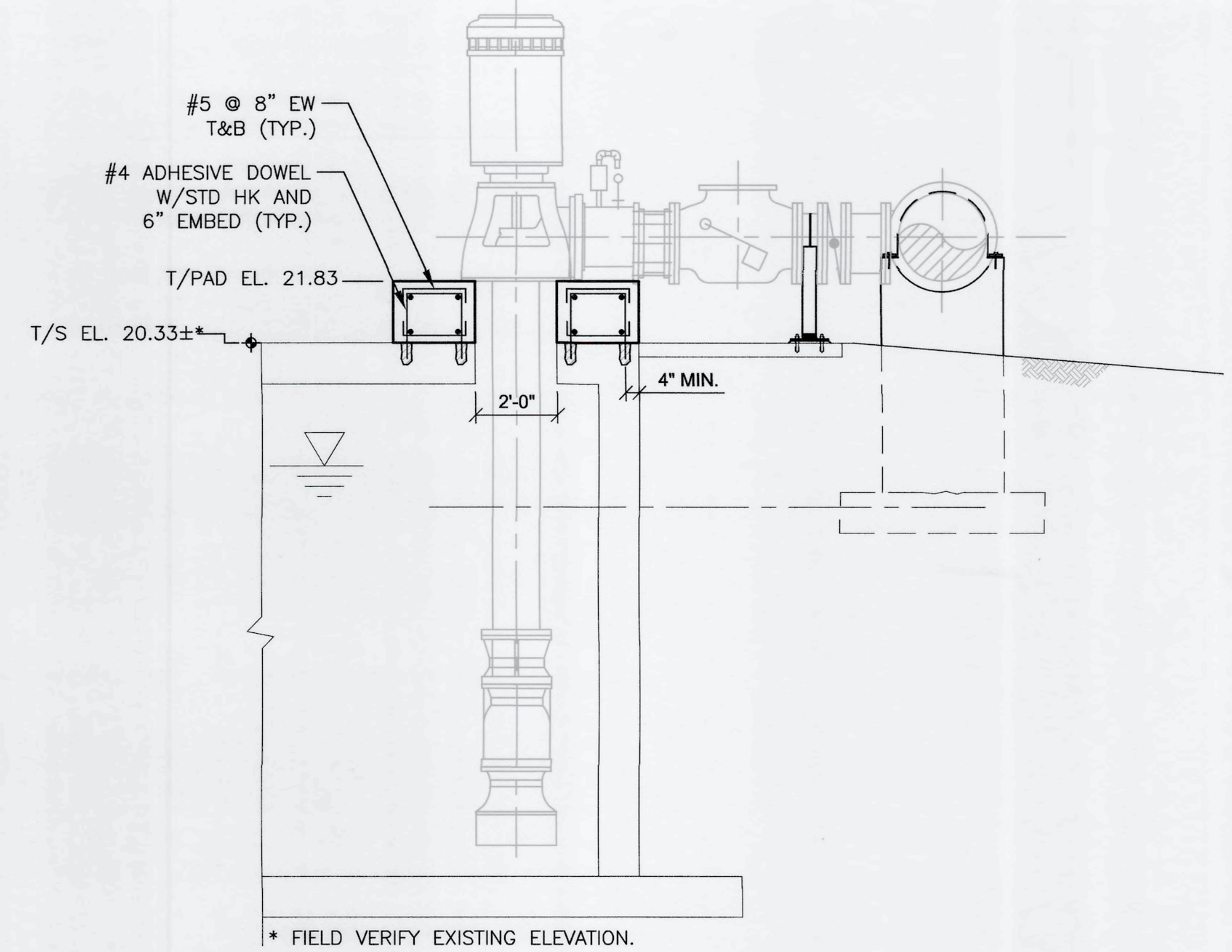

1 S-08 SECTION
SCALE: 3/8" = 1'-0"

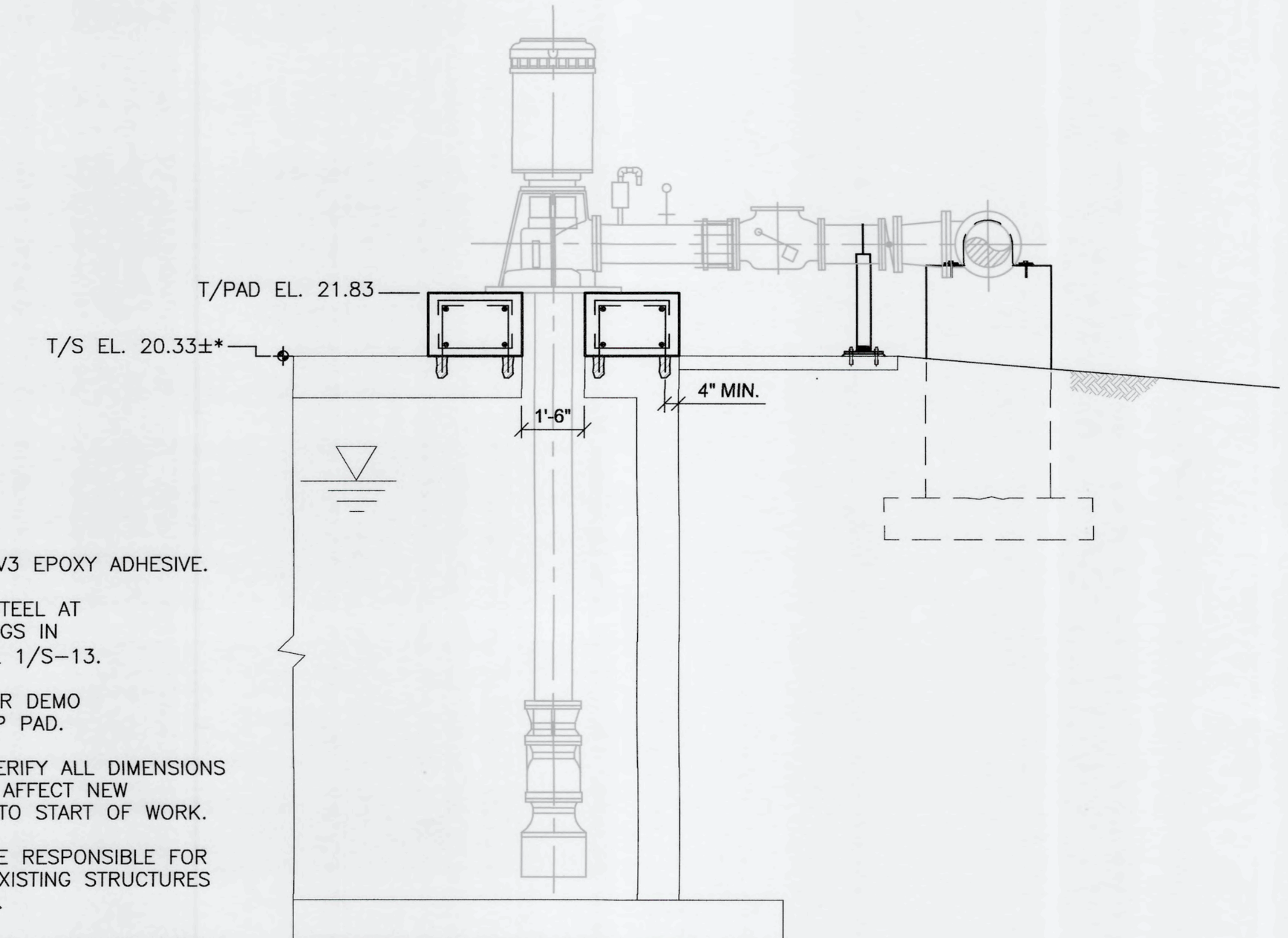

2 S-08 SECTION
SCALE: 3/8" = 1'-0"

NOTES:

1. USE HILT HIT-RE 500V3 EPOXY ADHESIVE.
2. PROVIDE ADDITIONAL STEEL AT ALL CONCRETE OPENINGS IN PUMP PAD PER DETAIL 1/S-13.
3. REF. MECH. DWGS. FOR DEMO OF EXIST. CONC. PUMP PAD.
4. CONTRACTOR SHALL VERIFY ALL DIMENSIONS AND ELEVATIONS THAT AFFECT NEW CONSTRUCTION PRIOR TO START OF WORK.
5. CONTRACTOR SHALL BE RESPONSIBLE FOR THE PROTECTION OF EXISTING STRUCTURES DURING CONSTRUCTION.
6. CONCRETE STRENGTH F'c=4500 PSI W/TYPE II, ASTM C150 CEMENT AND MAXIMUM 20% BY WEIGHT SLAG AND/OR FLY ASH CONTENT.
7. MINIMUM ANCHOR BOLT CONCRETE EDGE DISTANCE 4".

REV.NO.	DESCRIPTIONS	DATE
	REVISIONS	

H.A. HOBI LICENSE No 59360 STATE OF FLORIDA PROFESSIONAL ENGINEER 6-13-19
H. A. HOBI, P.E.
No. 59360
SEAL

McKIM&CREED
1365 Hamlet Avenue
Clearwater, Florida 33756
Phone: (727)442-7196, Fax: (727)461-3827
CA LIC No. 29588
www.mckimcreed.com

Manatee County FLORIDA

SWWRF
CCC REHAB AND
RECHARGE WELL PS PROJECT

RECHARGE WELL PUMP STATION PAD
PLAN AND SECTIONS

DATE:	JUNE, 2019
MCE PROJ. #	1024-0171
DRAWN	CN
DESIGNED	HAH
CHECKED	JV
PROJ. MGR.	TP

SCALE
HORIZONTAL: NA
VERTICAL: NA

DRAWING NUMBER
S-08

STATUS: ISSUED FOR BID
REVISION

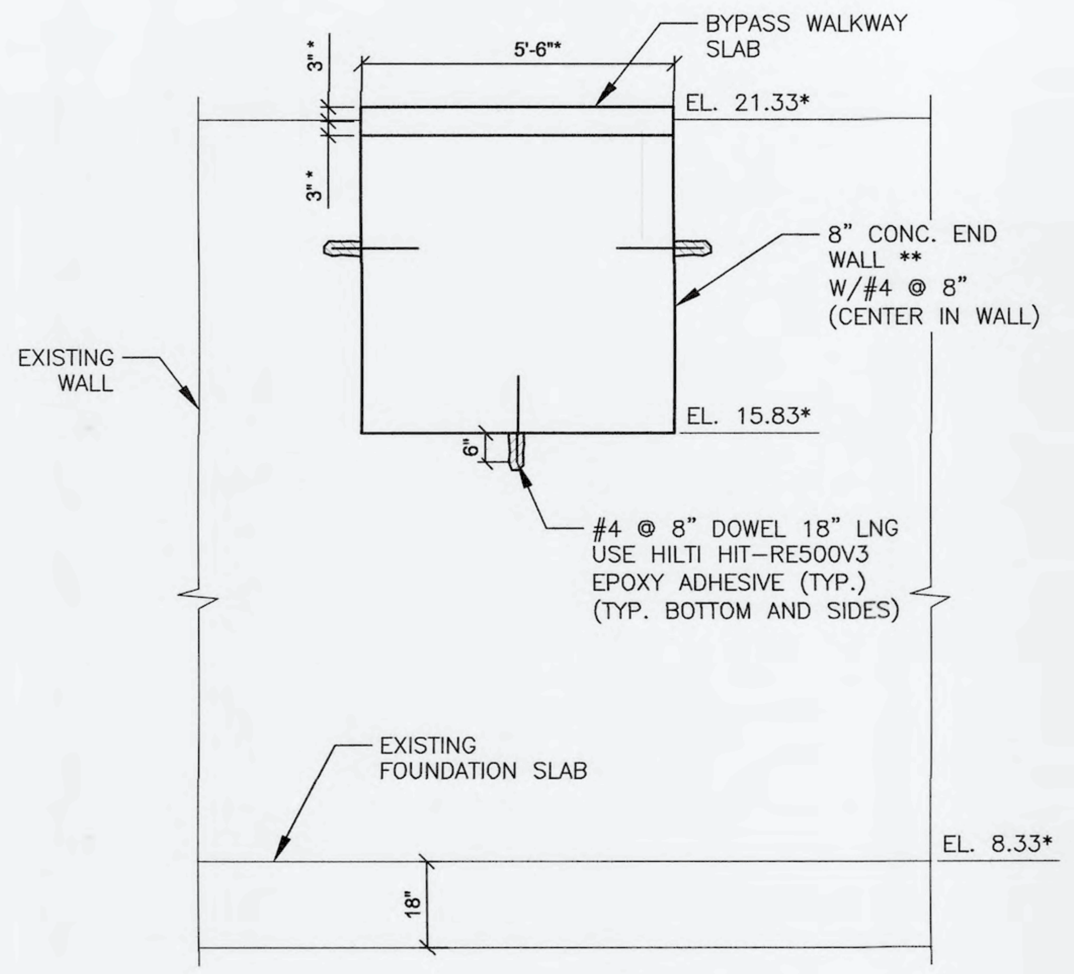

* VERIFY ALL DIMENSIONS AND ELEVATIONS
** USE SYNKO FLEX WATER STOP ALL AROUND.

NOTES:

1. REMOVE SLIDE GATE AND FRAME AT BOTH ENDS OF BYPASS CHANNEL.
2. TRIM AND FINISH RAILING AT BOTH ENDS OF BYPASS WALKWAY FOR ACCESS TO WALKWAY.

2 / S-09 END OF BYPASS CHANNEL WALL

SCALE: 3/8" = 1'-0"

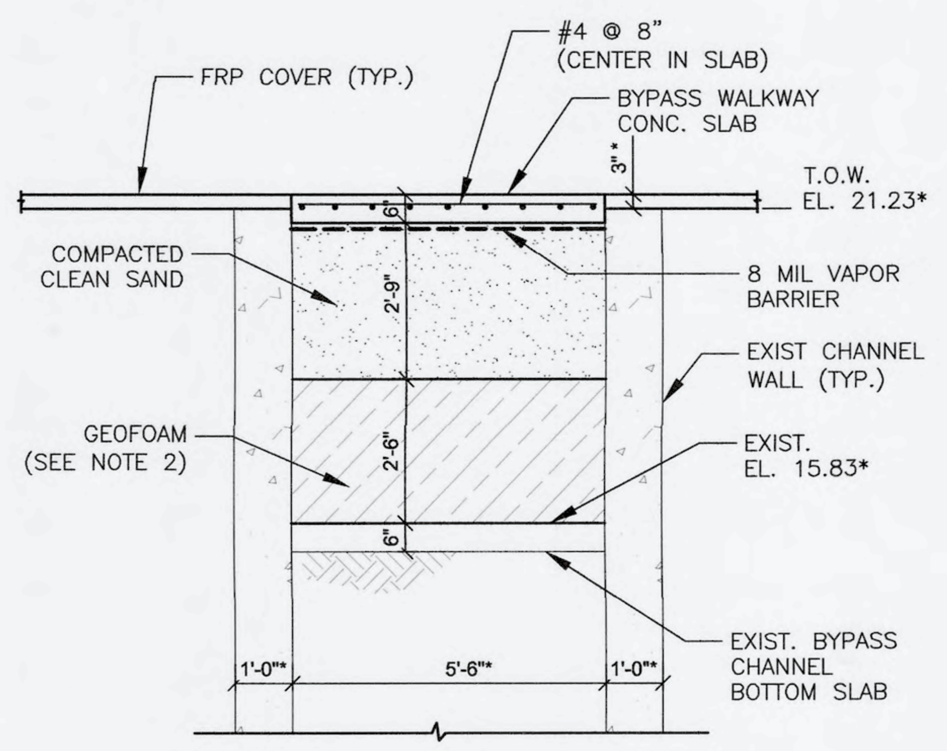

* FIELD VERIFY ELEVATION AND DIMENSIONS

1 / S-09 BYPASS CHANNEL WALKWAY SECTION

SCALE: 3/8" = 1'-0"

NOTES:

1. SEE MECHANICAL SHEETS FOR CHEMICAL PIPING DETAILS.
2. GEOFOAM SHALL BE ASTM D6817 TYPE EPS 15 (0.90 LB/FT) BOND GEOFOAM BLOCK TO FLOOR SLAB AND TO EACH OTHER.
3. ADD ALUM. RAILING TO ALL LOCATIONS WITH A VERTICAL DROP OF 18" OR MORE.
4. DESIGN LIVE LOAD FOR FRP COVER AND HATCHES SHALL BE 50PSF.
5. REF. RECORD DRAWINGS FOR DIMENSIONS AND GEOMETRY NOT SHOWING ON THIS DRAWING.
6. COVER SYSTEM DESIGN SHALL MEET ALL CURRENT APPLICABLE CODES, CONTRACTOR SHALL SUBMIT FRP COVER SYSTEM SHOP DRAWINGS AND CALCULATIONS SIGNED AND SEALED BY A FLORIDA PROFESSIONAL ENGINEER FOR REVIEW BY ENGINEER PRIOR TO FABRICATION. EXISTING CCC WALLS MAY BE USED TO SUPPORT THE COVER AND IT'S SUPPORT MEMBERS AND CONCRETE ANCHORS.
7. FRP COVER SYSTEM SHALL INCLUDE ALL THE HATCH COVERS SHOWN ON THE DRAWING.
8. CONTRACTOR SHALL VERIFY ALL EXISTING DIMENSIONS AND ELEVATIONS THAT AFFECT NEW CONSTRUCTION PRIOR START OF WORK.
9. CONTRACTOR SHALL BE RESPONSIBLE FOR THE PROTECTION OF EXISTING STRUCTURES DURING CONSTRUCTION.
10. CONCRETE STRENGH F'c=4500 PSI W/TYPE II, ASTM C150 CEMENT AND MAXIMUM 20% BY WEIGHT SLAG AND/OR FLY ASH CONTENT.
11. REFENCE MECH. DWGS FOR SIZE AND LOCATION FOR ALL FRP COVER OPENINGS.

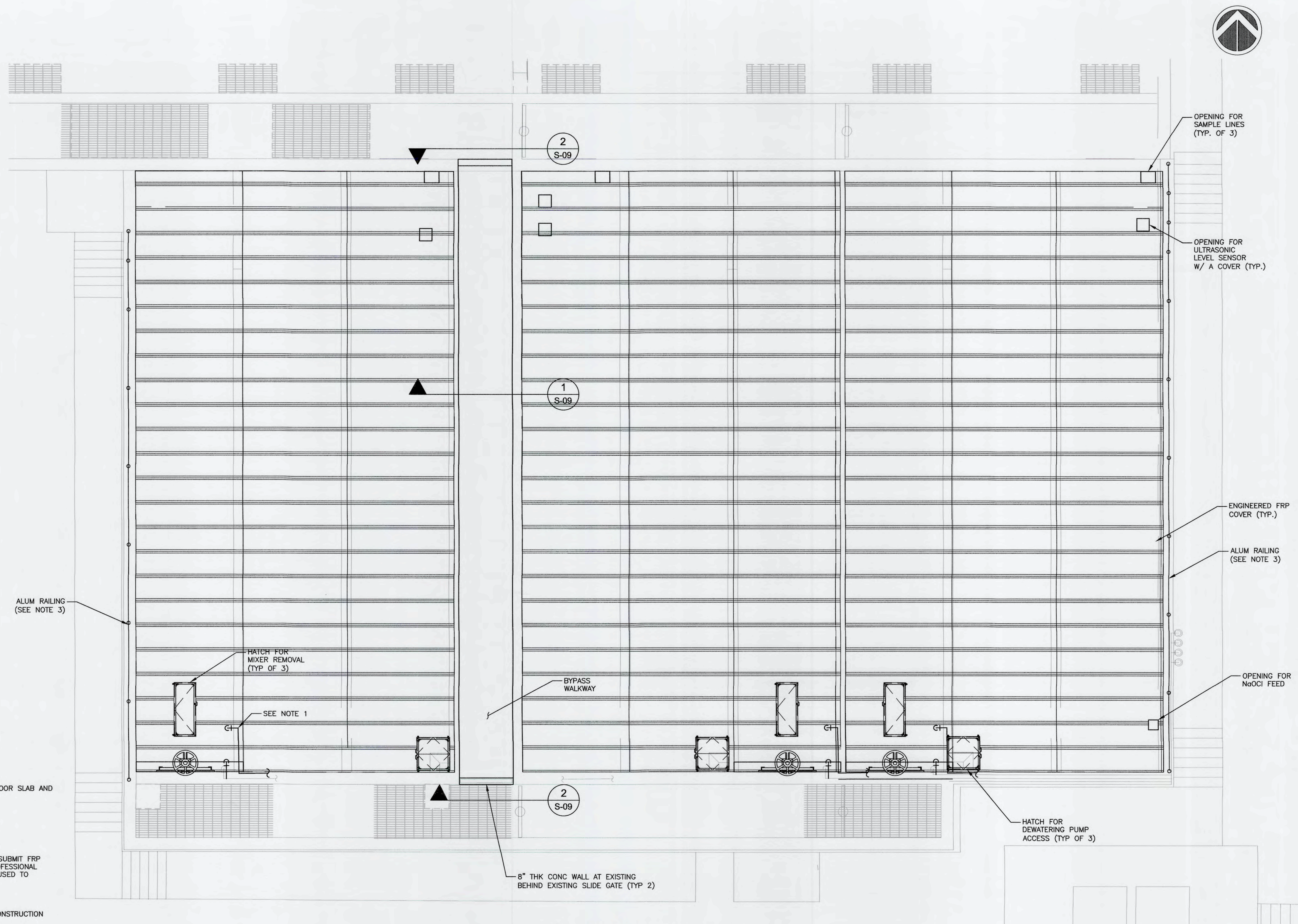

2 / S-07 CCC FRP COVER VIEW

SCALE: 1" = 5'

REV.NO.	DESCRIPTIONS	DATE
	REVISIONS	

SEAL: H.A. HOBI LICENSE No 59360 STATE OF FLORIDA PROFESSIONAL ENGINEER 6-13-19
H. A. HOBI, P.E.
No. 59360

SEAL

McKIM&CREED
1365 Hamlet Avenue
Clearwater, Florida 33756
Phone: (727)442-7196, Fax: (727)461-3827
CA LIC No. 29588
www.mckimcreed.com

Manatee County FLORIDA

SWWRF
CCC REHAB AND RECHARGE WELL PS PROJECT

CCC COVER PLAN AND BYPASS WALKWAY DETAILS

DATE:	JUNE, 2019
MCE PROJ. #	1024-0171
DRAWN	CN
DESIGNED	HAH
CHECKED	JV
PROJ. MGR.	TP

SCALE — HORIZONTAL: NA; VERTICAL: NA

DRAWING NUMBER: S-09

STATUS: ISSUED FOR BID

REVISION

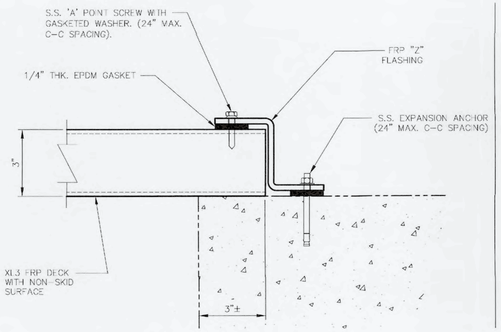

FRP COVER
TOP MOUNT DECK CONNECTION DETAIL
SCALE: N.T.S.

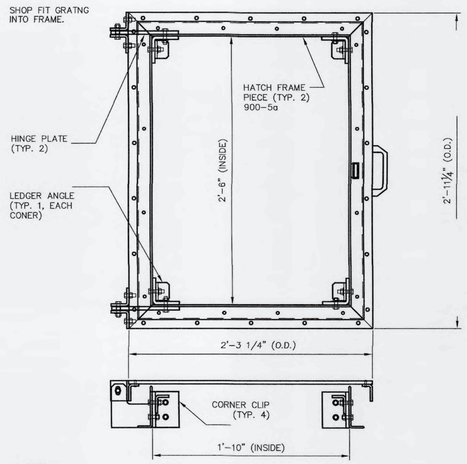

NOTES:
1. MATERIAL: FRP AND S.S.
2. RESIN SYSTEM: PE
3. COLOR: GRAY
4. TOLERANCE: (U.N.O.) ±1/16"
5. BILL PG. NO.:

P.C. MK.:
TOTAL QTY.:

XL6 FRP FLAT OPENING COVER
SCALE: N.T.S.

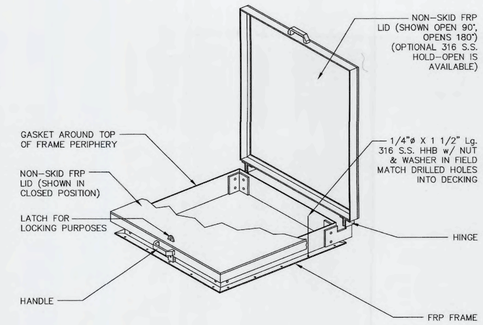

FRP SQ. ACCESS HATCH COVER
SCALE: N.T.S.

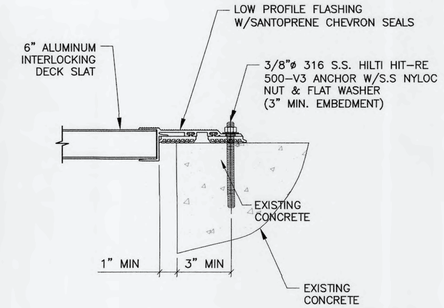

LOW PROFILE ENGINEERED ALUMINUM COVER
SCALE: NTS

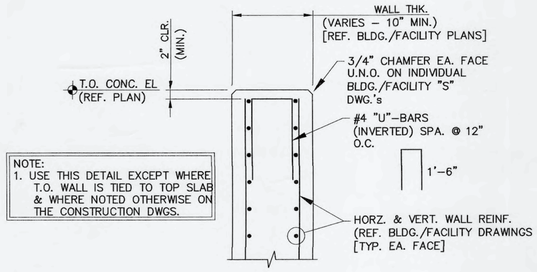

NOTE:
1. USE THIS DETAIL EXCEPT WHERE T.O. WALL IS TIED TO TOP SLAB & WHERE NOTED OTHERWISE ON THE CONSTRUCTION DWGS.

1 - DETAIL - TYP. T.O. WALL REINF.
SCALE: NTS

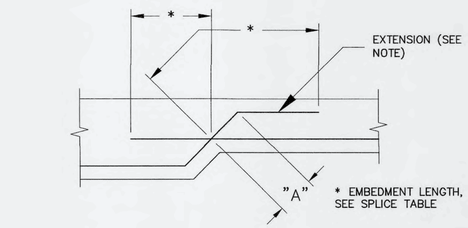

NOTE:

EXTENSION SHOWN IS REQUIRED (12" MIN.) WHEN DIAGONAL LENGTH "A" IS LESS THAN EMBEDMENT LENGTH SHOWN IN SPLICE TABLE.

5 - DETAIL - SPLICE LENGTH OF DIAGONAL REINFORCEMENT
SCALE: NTS

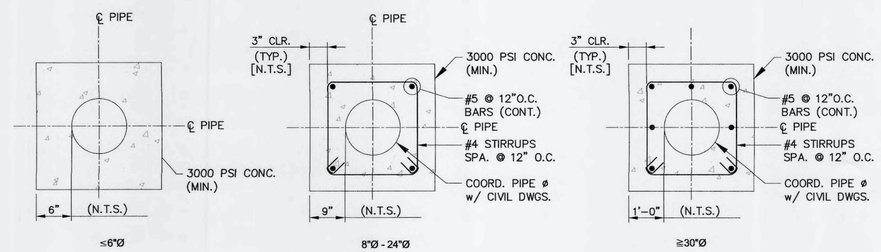

6 - DETAIL - TYP. CONC. PIPE ENCASING
SCALE: NTS

2 - DETAIL - TYP. CORNER BAR REINF.
SCALE: NTS

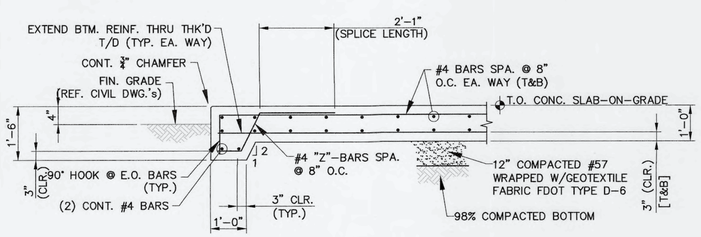

7 - SECTION - TYP. EQUIPMENT PAD
SCALE: 1/2" = 1'-0"

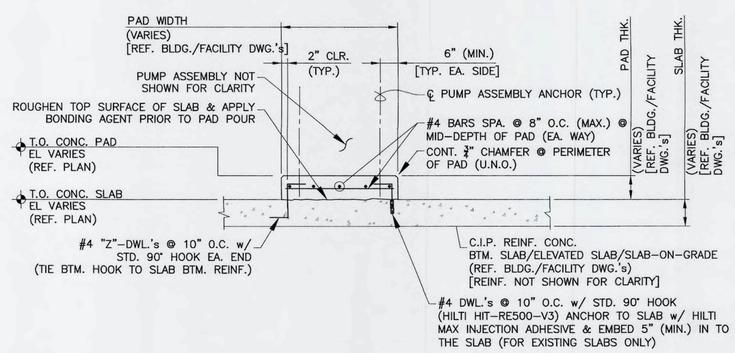

8 - DETAIL - TYP. CONC. HOUSEKEEPING PAD
SCALE: 1/2" = 1'-0"

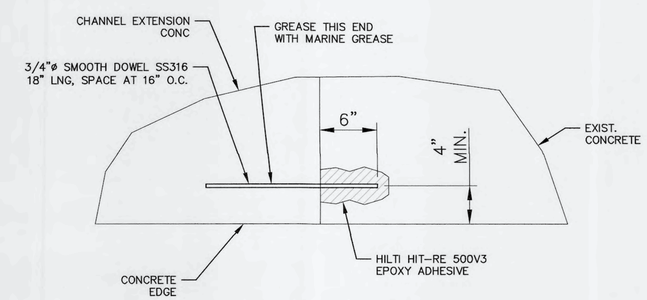

9 - DETAIL- WALL AND SLAB JOINT DOWEL
SCALE: NTS

REV.NO.	DESCRIPTIONS	DATE
	REVISIONS	

H. A. HOBI, P.E. No. 59360

McKIM&CREED
1365 Hamlet Avenue
Clearwater, Florida 33756
Phone: (727)442-7196, Fax: (727)461-3827
CA LIC No. 29588
www.mckimcreed.com

Manatee County FLORIDA

SWWRF
CCC REHAB AND
RECHARGE WELL PS PROJECT

STRUCTURAL DETAILS

DATE:	JUNE, 2019
MCE PROJ. #	1024-0171
DRAWN	CN
DESIGNED	HAH
CHECKED	JV
PROJ. MGR.	TP

SCALE
HORIZONTAL: NA
VERTICAL: NA

DRAWING NUMBER
S-10

STATUS: ISSUED FOR BID
REVISION

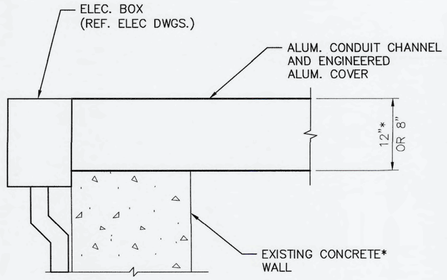

* SAW-CUT SUPPORT WALL AS REQUIRED TO FIT ALUM. CHANNEL.

14 S-11 DETAIL
1"=1'-0"

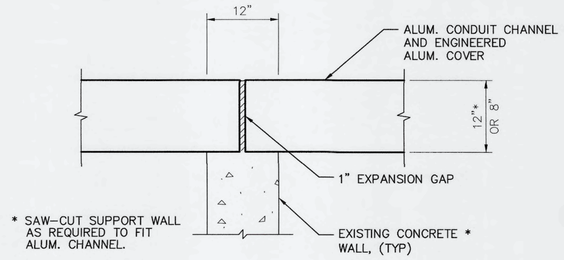

* SAW-CUT SUPPORT WALL AS REQUIRED TO FIT ALUM. CHANNEL.

15 S-11 DETAIL
1"=1'-0"

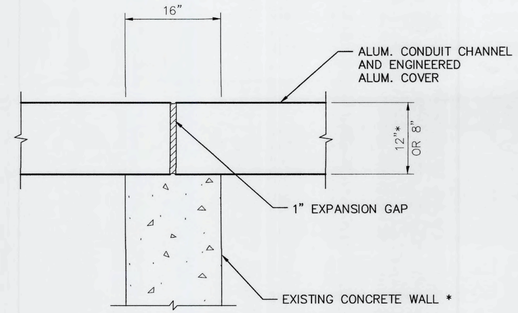

* SAW-CUT TOP OF SUPPORT WALL AS REQUIRED TO FIT ALUM. CHANNEL.

16 S-11 DETAIL
1"=1'-0"

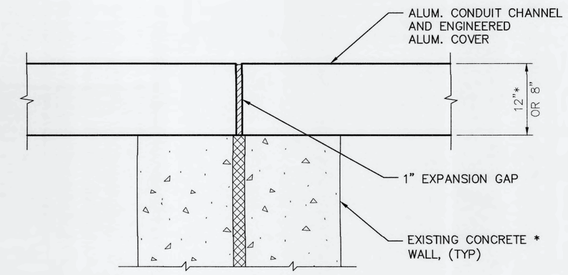

* SAW-CUT SUPPORT WALLS AS REQUIRED TO FIT ALUM. CHANNEL.

17 S-11 DETAIL
1"=1'-0"

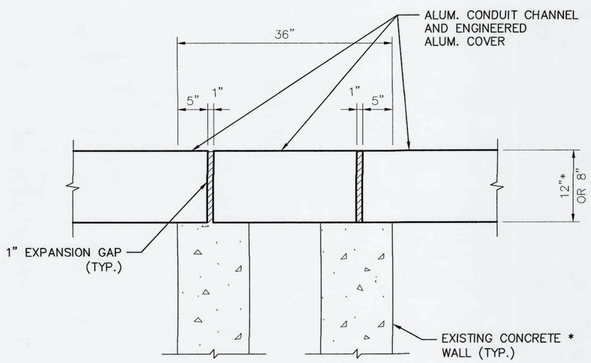

* SAW-CUT SUPPORT WALLS AS REQUIRED TO FIT ALUM. CHANNEL.

18 S-11 DETAIL
1"=1'-0"

NOTES:

1. ALL ALUM. SHALL BE 6061-T6.
2. COAT ALL CONCRETE SURFACES IN CONTACT WITH ALUM. CHANNEL WITH COAL TAR-EPOXY PER SPECIFICATION SEC 09900.

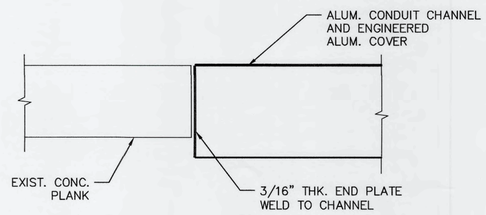

19 S-11 DETAIL
1"=1'-0"

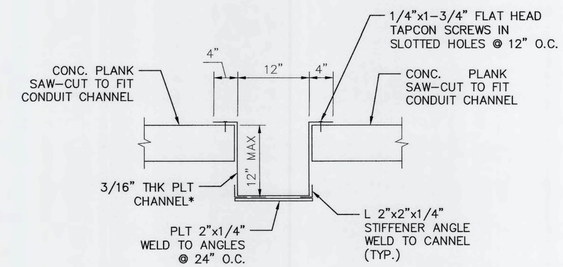

1 S-11 SECTION
1"=1'-0"

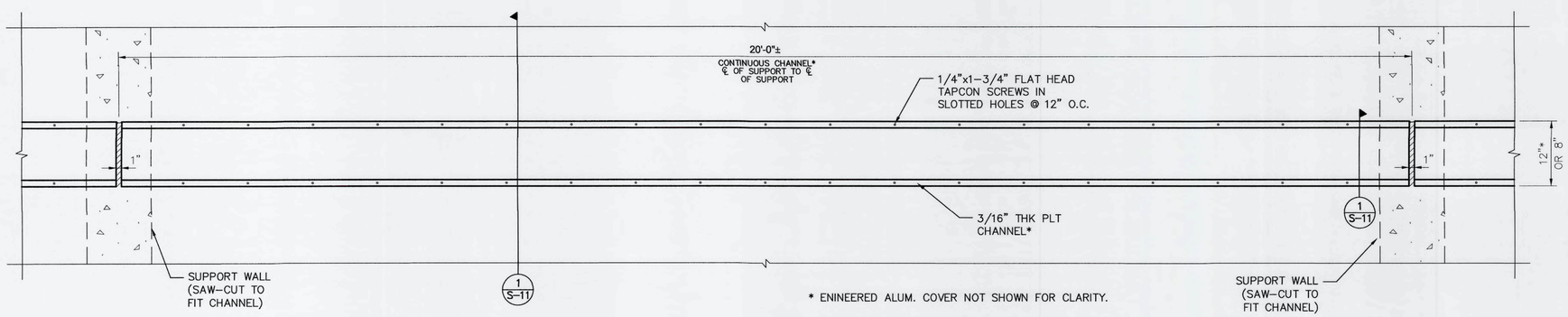

* ENINEERED ALUM. COVER NOT SHOWN FOR CLARITY.

20 S-11 ALUM. CONDUIT CHANNEL PLAN
1"=1'-0"

REV.NO.	DESCRIPTIONS	DATE
	REVISIONS	

SEAL
H. A. HOBI
LICENSE
No 59360
STATE OF FLORIDA
PROFESSIONAL ENGINEER
H. A. HOBI, P.E.
No. 59360

SEAL

McKIM&CREED
1365 Hamlet Avenue
Clearwater, Florida 33756
Phone: (727)442-7196, Fax: (727)461-3827
CA LIC No. 29588
www.mckimcreed.com

Manatee County FLORIDA

SWWRF
CCC REHAB AND
RECHARGE WELL PS PROJECT

ALUM. CONDUIT CHANNEL
PLAN AND DETAILS

DATE:	JUNE, 2019
MCE PROJ. #	1024-0171
DRAWN	CN
DESIGNED	HAH
CHECKED	JV
PROJ. MGR.	TP

SCALE
HORIZONTAL: NA
VERTICAL: NA

DRAWING NUMBER
S-11

STATUS:
REVISION
ISSUED FOR BID

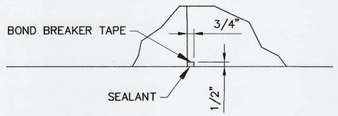

2 - DETAIL - CONTRACTION JOINT
SCALE: 1 1/2" = 1'-0"

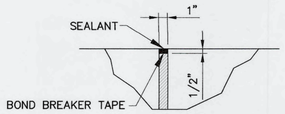

3 - DETAIL - EXPANSION JOINT
SCALE: 1 1/2" = 1'-0"

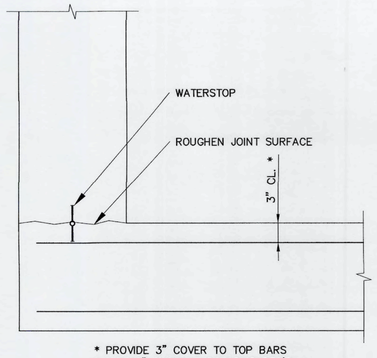

* PROVIDE 3" COVER TO TOP BARS
WHERE 6" PVC WATERSTOP IS REQ'D.

WALL AND FLOOR SLAB.

4 - DETAIL - TYP. WALL / FLOOR SLAB CONST. JOINT
SCALE: NTS

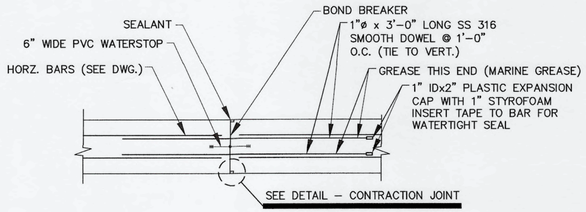

5 - DETAIL - WALL/SLAB CONTRACTION JOINT (CJ)
SCALE: NTS

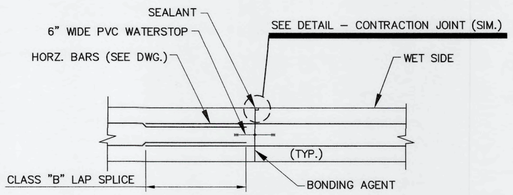

6 - DETAIL - WALL/SLAB CONSTRUCTION JOINT (SJ)
SCALE: NTS

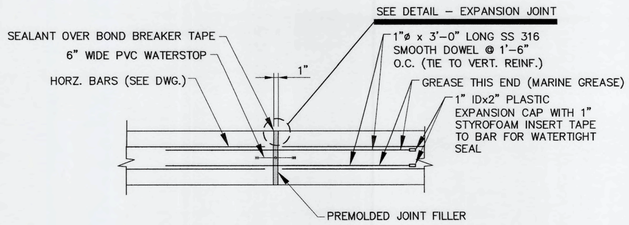

7 - DETAIL - WALL/SLAB EXPANSION JOINT (EJ)
SCALE: NTS

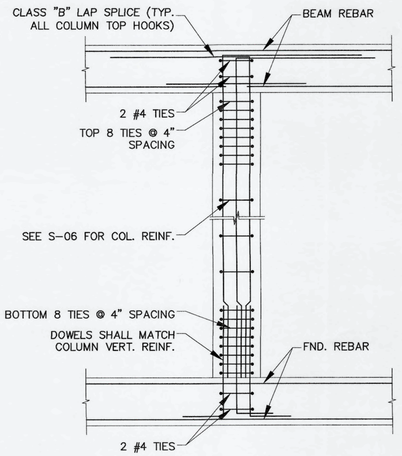

8 - DETAIL - COLUMN ENDS CONNECTION DETAIL
N.T.S.

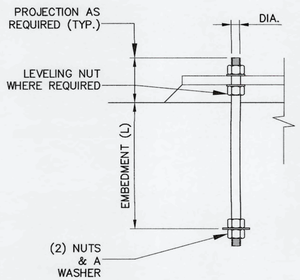

NOTE:

1. REFER TO SPECIFICATIONS FOR ANCHOR BOLT MATERIAL REQUIREMENTS.

EMBEDMENT CHART	
BOLT DIA. (IN.)	L (IN.)
	S.S. TYPE 316
1/2	6
5/8	7 1/2
3/4	9
7/8	10 1/2
1	12
1 1/8	13 1/2
1 1/4	15
1 3/8	16 1/2
1 1/2	18

9 - TYPICAL ANCHOR BOLT DETAIL
N.T.S.

REV.NO.	DESCRIPTIONS	DATE

REVISIONS

SEAL

H. A. HOBI, P.E.
No. 59360

SEAL

McKIM&CREED
1365 Hamlet Avenue
Clearwater, Florida 33756
Phone: (727)442-7196, Fax: (727)461-3827
CA LIC No. 29588
www.mckimcreed.com

Manatee County FLORIDA

SWWRF
CCC REHAB AND
RECHARGE WELL PS PROJECT

STRUCTURAL DETAILS

DATE:	JUNE, 2019
MCE PROJ. #	1024-0171
DRAWN	CN
DESIGNED	HAH
CHECKED	JV
PROJ. MGR.	TP

SCALE
HORIZONTAL: NA
VERTICAL: NA

DRAWING NUMBER
S-12

STATUS: ISSUED FOR BID
REVISION

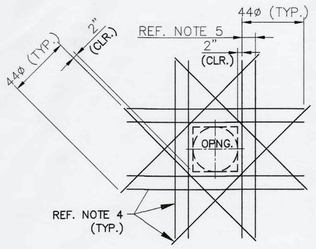

NOTES:
1. USE THIS DETAIL FOR PENETRATIONS 8" OR LARGER. FOR SMALLER OPENINGS BEND BARS IN FIELD PER ACI 350 LATEST EDITION.
2. PLACE EXTRA BARS OF THE SAME SIZE AS THE INTERRUPTED BARS AT EACH SIDE OF OPENINGS. QUANTITY OF EXTRA BARS AT EACH SIDE SHALL EQUAL HALF THE QUANTITY OF INTERRUPTED BARS, EXCEPT WHERE NOTED OTHERWISE. PROVIDE ONE DIAGONAL BAR EACH SIDE OF OPENING, SIZE TO BE EQUAL TO MAIN REINFORCING. (TYP. EA. FACE).
3. ø SYMBOL = BAR DIAMETERS.
4. WHERE BAR IS INTERRUPTED BY A CJ OR CONC. EDGE BEND BAR PARALLEL TO THE JOINT EDGE & PROVIDE BAR LEG LENGTH TO DEVELOP PER CLASS B DEVELOPMENT LENGTH FOR BARS IN TENSION.
5. SPACE THE ADD'L BARS @ ½ THE REQ'D BAR SPACING.

1 - DETAIL - TYP. REINF. @ SLAB / WALL OPNG.'s & PIPE PEN.'s

SCALE: 3/8" = 1'-0"

NOTES:
1. * INDICATES DIMENSIONS TO BE DETERMINED BY EQUIPMENT FURNISHED.
2. D = PIPE OR CONDUIT O.D.

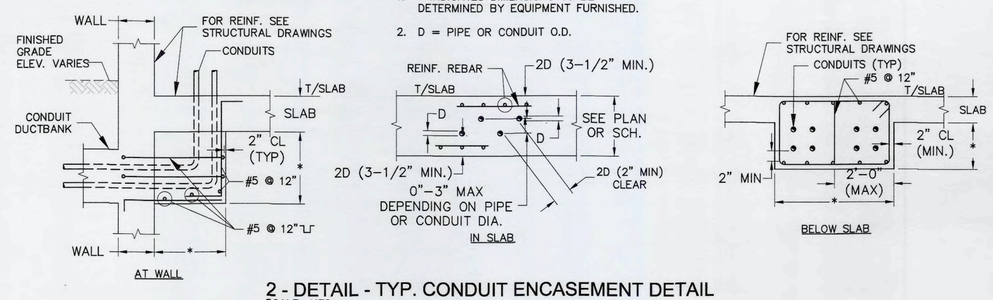

2 - DETAIL - TYP. CONDUIT ENCASEMENT DETAIL

SCALE: NTS

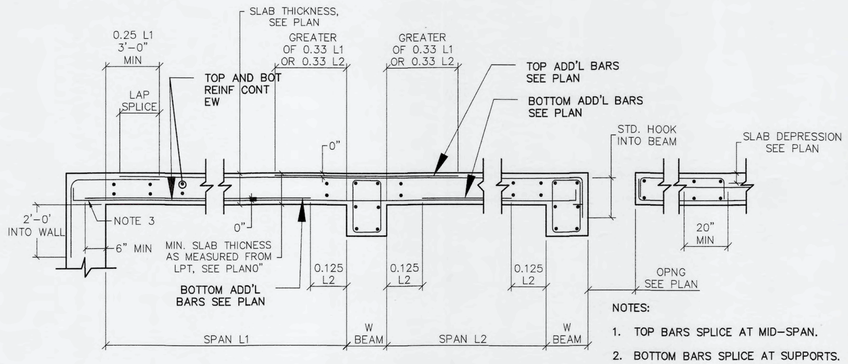

NOTES:
1. TOP BARS SPLICE AT MID-SPAN.
2. BOTTOM BARS SPLICE AT SUPPORTS.
3. HOOK BOTTOM CONTINUOUS BARS. IF STD. HOOK DOES NOT FIT, ROTATE HOOK TO FIT AND/OR USE 180° HOOK.
4. NO ADDITIONAL TOP OR BOTTOM REINFORCEMENT REQUIRED.

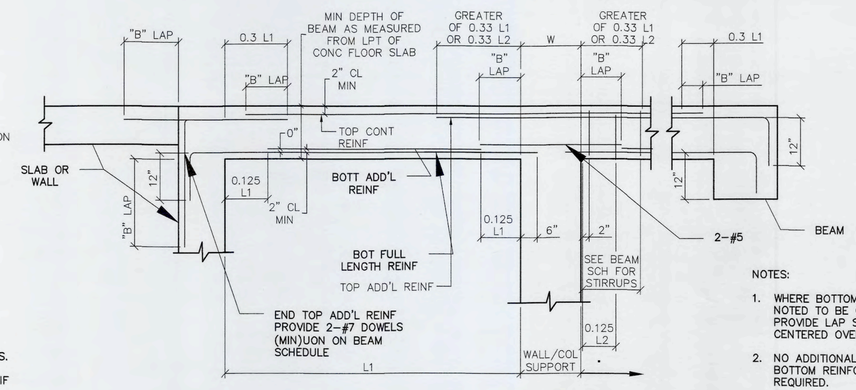

NOTES:
1. WHERE BOTTOM BARS ARE NOTED TO BE CONTINUOUS, PROVIDE LAP SPLICE CENTERED OVER SUPPORT.
2. NO ADDITIONAL TOP OR BOTTOM REINFORCEMENT REQUIRED.

3 - TYPICAL CONCRETE SLAB DETAIL

SCALE: N.T.S.

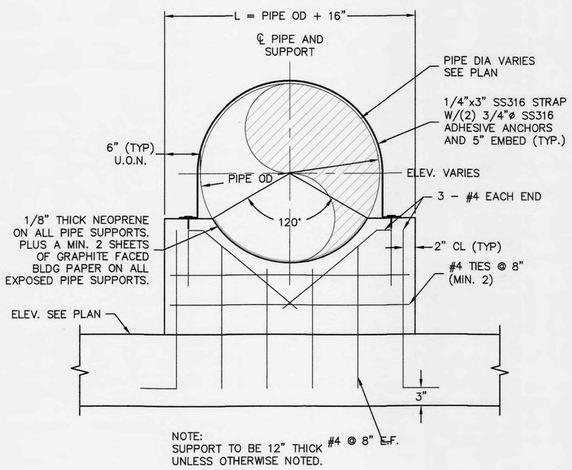

NOTE:
SUPPORT TO BE 12" THICK UNLESS OTHERWISE NOTED.

4 - TYPICAL REINFORCED CONCRETE BEAM DETAIL

SCALE: N.T.S.

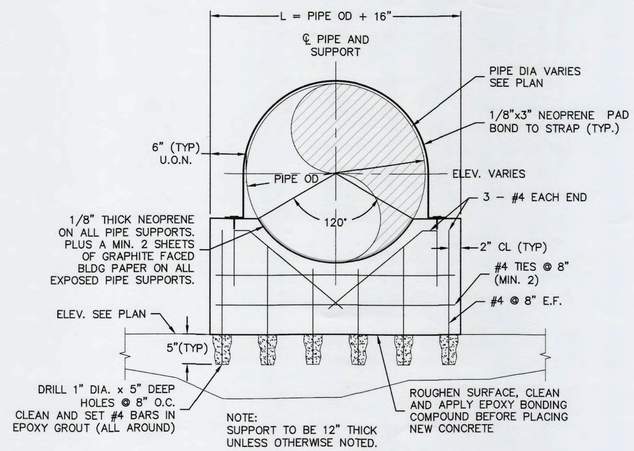

NOTE:
SUPPORT TO BE 12" THICK UNLESS OTHERWISE NOTED.

5 - TYPICAL CONCRETE SUPPORT DETAIL

SCALE: N.T.S.

REV.NO.	DESCRIPTIONS	DATE

REVISIONS

H. A. HOBI, P.E. No. 59360

SEAL

McKIM&CREED
1365 Hamlet Avenue
Clearwater, Florida 33756
Phone: (727)442-7196, Fax: (727)461-3827
CA LIC No. 29588
www.mckimcreed.com

Manatee County FLORIDA

SWWRF
CCC REHAB AND
RECHARGE WELL PS PROJECT

STRUCTURAL DETAILS

DATE:	JUNE, 2019
MCE PROJ. #	1024-0171
DRAWN	CN
DESIGNED	HAH
CHECKED	JV
PROJ. MGR.	TP

SCALE: HORIZONTAL: NA VERTICAL: NA

DRAWING NUMBER: S-13

STATUS: ISSUED FOR BID

REVISION

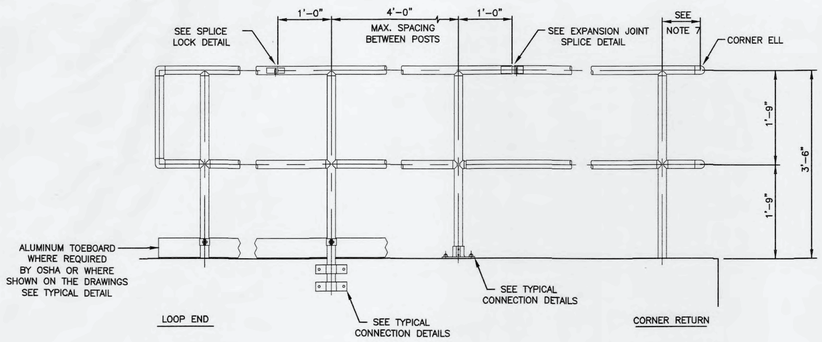

TYPICAL TYPE III GUARDRAIL

GUARDRAILS SHALL BE TOP-MOUNTED OR SIDE-MOUNTED, AS SHOWN ON PLANS

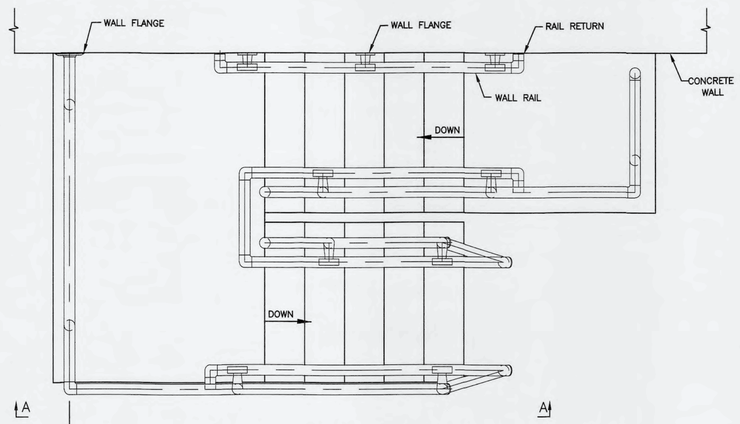

TYPICAL TYPE III GUARDRAIL AND HANDRAIL AT STAIRWAYS

GUARDRAILS SHALL BE TOP-MOUNTED OR SIDE-MOUNTED, AS SHOWN ON PLANS

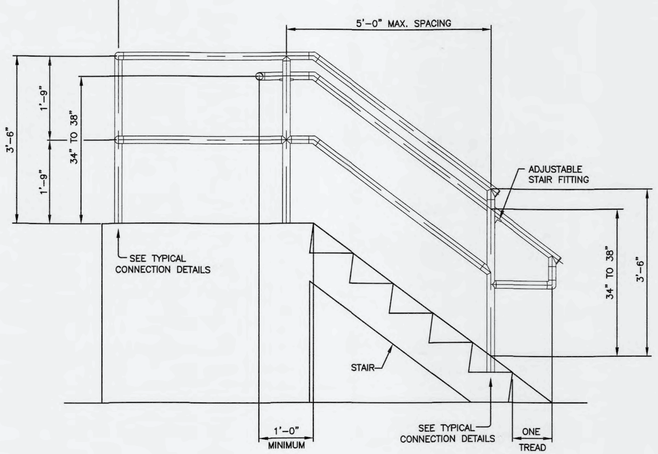

VIEW A-A

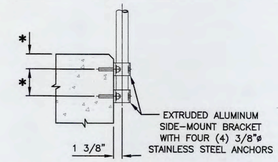

TYPICAL SIDE MOUNT CONNECTION TO CONCRETE WALL

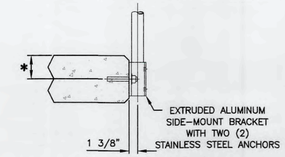

TYPICAL SIDE MOUNT CONNECTION TO CONCRETE SLAB

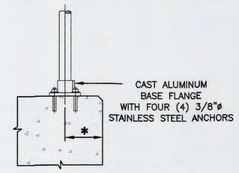

TYPICAL TOP MOUNT CONNECTION TO CONCRETE

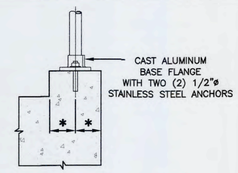

TYPICAL TOP MOUNT CONNECTION TO CONCRETE CURB

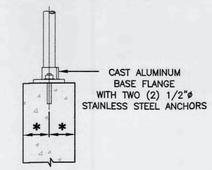

TYPICAL TOP MOUNT CONNECTION TO CONCRETE WALL

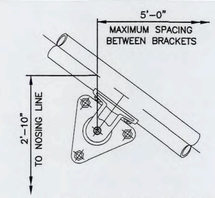

WALL RAIL ELEVATION

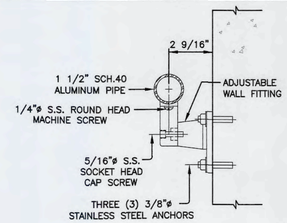

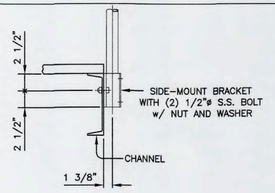

TYPICAL SIDE MOUNT CONNECTION TO CHANNEL

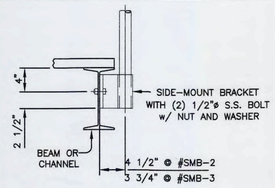

TYPICAL SIDE MOUNT CONNECTION TO BEAM

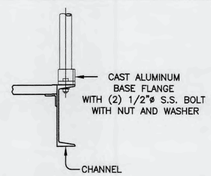

TYPICAL TOP MOUNT CONNECTION TO CHANNEL

RAILING NOTES:

1. RAILING SHALL BE THE PRODUCT OF A COMPANY NORMALLY ENGAGED IN THE MANUFACTURE OF PIPE RAILING. RAILING SHALL BE SHOP ASSEMBLED IN LENGTHS NOT TO EXCEED 24 FEET FOR FIELD ERECTION.
2. THE RAILING SHALL BE MADE OF PIPES JOINED TOGETHER WITH COMPONENT FITTINGS. SAMPLES OF ALL COMPONENTS, BASES, TOE PLATE AND PIPE SHALL BE SUBMITTED FOR APPROVAL AT THE REQUEST OF THE ENGINEER. COMPONENTS THAT ARE POP-RIVETED OR GLUED AT THE JOINTS WILL NOT BE ACCEPTABLE. ALL COMPONENTS MUST BE MECHANICALLY FASTENED WITH STAINLESS STEEL TYPE 316.
3. RAILINGS SHALL BE 1 1/2" SCHEDULE 40 ALUMINUM PIPE ALLOY 6063-T6, ASTM-B-429 POSTS SHALL BE 1 1/2" SCHEDULE 40 ALUMINUM PIPE OF THE SAME ALLOY. POST SPACING SHALL BE A MAXIMUM OF 4'-0".
4. RAILING SHALL BE DESIGNED TO WITHSTAND A 200 LB CONCENTRATED LOAD APPLIED IN ANY DIRECTION AND AT ANY POINT ON THE TOP RAIL. GUARDRAILS AND HANDRAILS SHALL ALSO BE DESIGNED TO WITHSTAND A UNIFORM LOAD OF 20 LB/FT APPLIED HORIZONTALLY TO THE TOP RAIL. UNIFORM LOADS ARE NOT TO BE APPLIED SIMULTANEOUSLY WITH THE CONCENTRATED LOADS.
5. THE MANUFACTURER SHALL SUBMIT CALCULATIONS FOR APPROVAL BY THE ENGINEER. TESTING OF BASE CASTINGS OR BASE EXTRUSIONS BY AN INDEPENDENT LAB OR MANUFACTURER'S LAB (IF MANUFACTURER'S LAB MEETS THE REQUIREMENTS OF THE ALUMINUM ASSOCIATION) WILL BE AN ACCEPTABLE SUBSTITUTE FOR CALCULATIONS. CALCULATIONS WILL BE REQUIRED FOR APPROVAL OF ALL OTHER DESIGN ASPECTS.
6. POSTS SHALL NOT INTERRUPT THE CONTINUATION OF THE TOP RAIL AT ANY POINT ALONG THE RAILING, INCLUDING CORNERS AND END TERMINATIONS (OSHA 1910.23). THE TOP SURFACE OF THE TOP RAILING SHALL BE SMOOTH AND SHALL NOT BE INTERRUPTED BY PROJECTED FITTINGS.
7. THE MID-RAIL AT A CORNER RETURN SHALL BE ABLE TO WITHSTAND A 200 LB LOAD WITHOUT LOOSENING. THE MANUFACTURER IS TO DETERMINE THIS DIMENSION FOR THEIR SYSTEM AND PROVIDE PHYSICAL LABORATORY TESTS TO CONFIRM COMPLIANCE.
8. CONCRETE ANCHORS SHALL BE STAINLESS STEEL TYPE 316 AND SHALL BE FURNISHED BY THE HANDRAIL MANUFACTURER. THE ANCHOR DESIGN SHALL INCLUDE THE APPROPRIATE REDUCTION FACTORS FOR SPACING AND EDGE DISTANCES IN ACCORDANCE WITH THE MANUFACTURER'S PUBLISHED DATA.
9. TOE PLATE SHALL CONFORM TO OSHA STANDARDS. TOE PLATE SHALL BE A MINIMUM OF 4" HIGH AND SHALL BE BE AN EXTRUSION THAT ATTACHES TO THE POSTS WITH CLAMPS THAT WILL ALLOW FOR EXPANSION AND CONTRACTION BETWEEN POSTS. TOE PLATES SHALL BE SET 1/4" ABOVE THE WALKING SURFACE. TOE PLATES SHALL BE PROVIDED ON HANDRAILS AS REQUIRED BY OSHA AND/OR AS SHOWN ON DRAWINGS. TOE PLATES SHALL BE SHIPPED LOOSE IN STOCK LENGTHS FOR FIELD INSTALLATION.
10. OPENINGS IN THE RAILING SHALL BE GUARDED BY A SELF-CLOSING GATE (OSHA 1910.23). SAFETY CHAINS SHALL NOT BE USED UNLESS SPECIFICALLY SHOWN ON THE DRAWINGS.
11. FINISH SHALL BE ALUMINUM ASSOCIATION M10-C22-A41 (215-R1). THE PIPE SHALL BE PLASTIC-WRAPPED. THE PLASTIC WRAP IS TO BE REMOVED AFTER ERECTION.
12. ALUMINUM SURFACES IN CONTACT WITH CONCRETE, GROUT OR DISSIMILAR METALS WILL BE PROTECTED WITH A COAT OF BITUMINOUS PAINT, MYLAR ISOLATORS OR OTHER APPROVED MATERIAL.

* CONCRETE ANCHOR DIAMETER, EDGE DISTANCES, EMBEDMENT, TO BE DETERMINED UPON ANCHOR SELECTION.

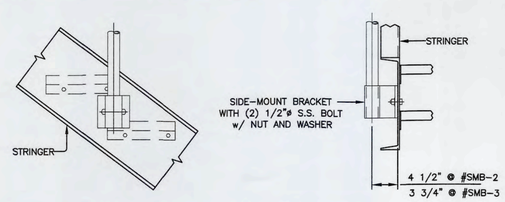

TYPICAL SIDE MOUNT CONNECTION TO STRINGER

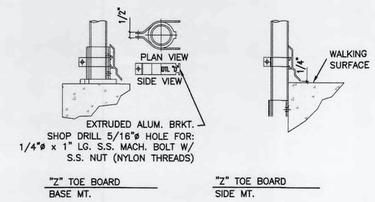

TYPICAL TOE BOARD BRACKET

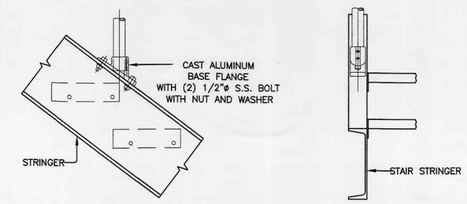

TYPICAL TOP MOUNT CONNECTION TO STRINGER

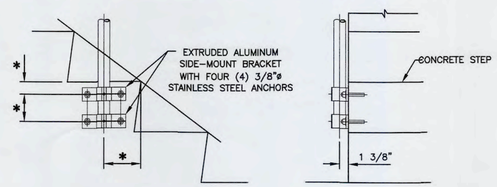

TYPICAL SIDE MOUNT CONNECTION TO CONCRETE STAIR

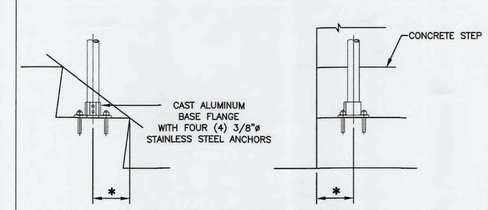

TYPICAL TOP MOUNT CONNECTION TO CONCRETE STAIR

REV.NO.	DESCRIPTIONS	DATE

REVISIONS

H. A. HOBI LICENSE No 59360 STATE OF FLORIDA PROFESSIONAL ENGINEER 6-13-19 SEAL

H. A. HOBI, P.E. No. 59360

SEAL

McKIM&CREED
1365 Hamlet Avenue
Clearwater, Florida 33756
Phone: (727)442-7196, Fax: (727)461-3827
CA LIC No. 29588
www.mckimcreed.com

Manatee County FLORIDA

SWWRF
CCC REHAB AND
RECHARGE WELL PS PROJECT

RAILING DETAILS

DATE:	JUNE, 2019
MCE PROJ. #	1024-0171
DRAWN	CN
DESIGNED	HAH
CHECKED	JV
PROJ. MGR.	TP

SCALE
HORIZONTAL: NA
VERTICAL: NA

DRAWING NUMBER
S-14

STATUS: ISSUED FOR BID

REVISION

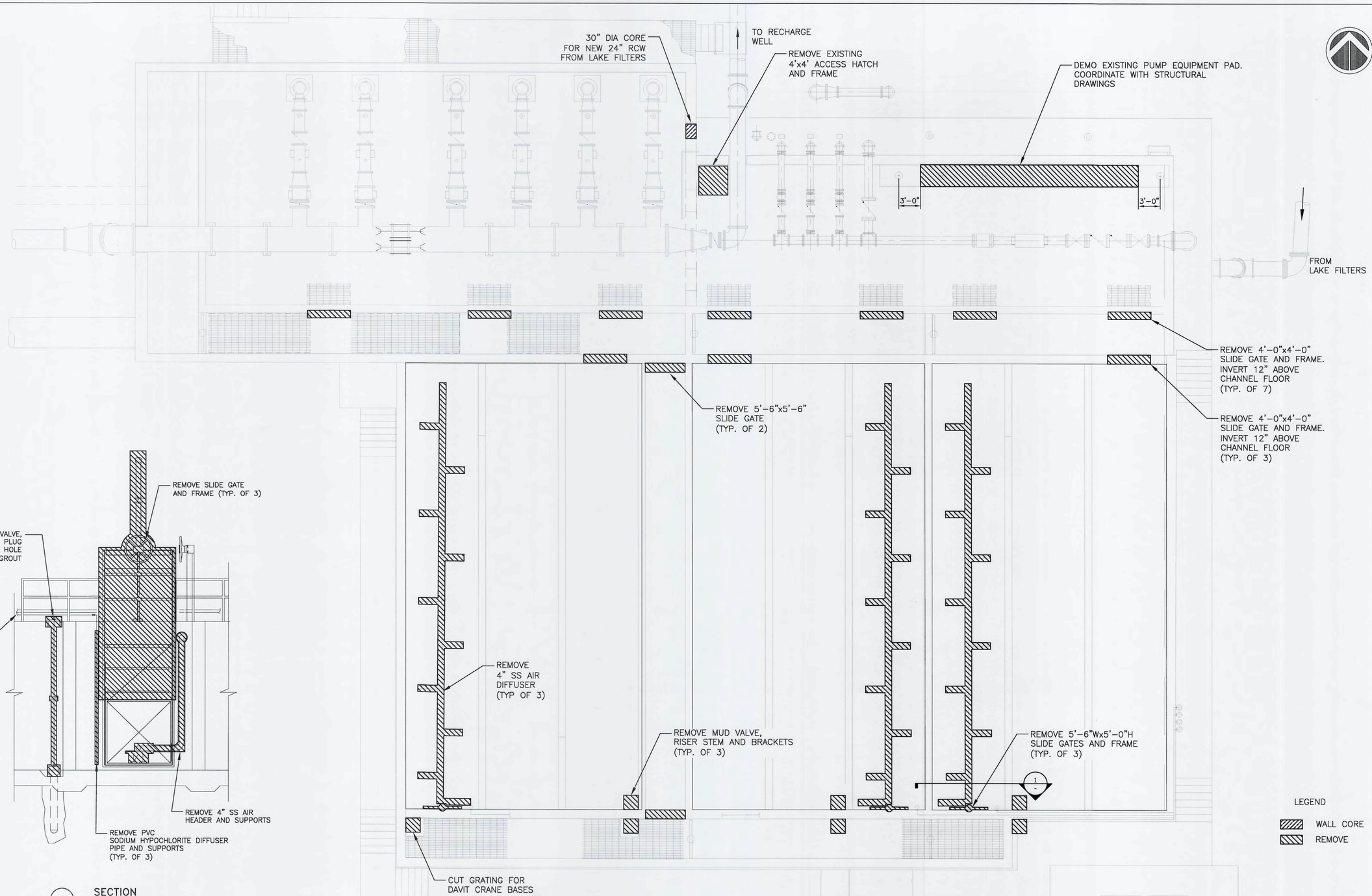

PLAN
SCALE: 5/32" = 1'

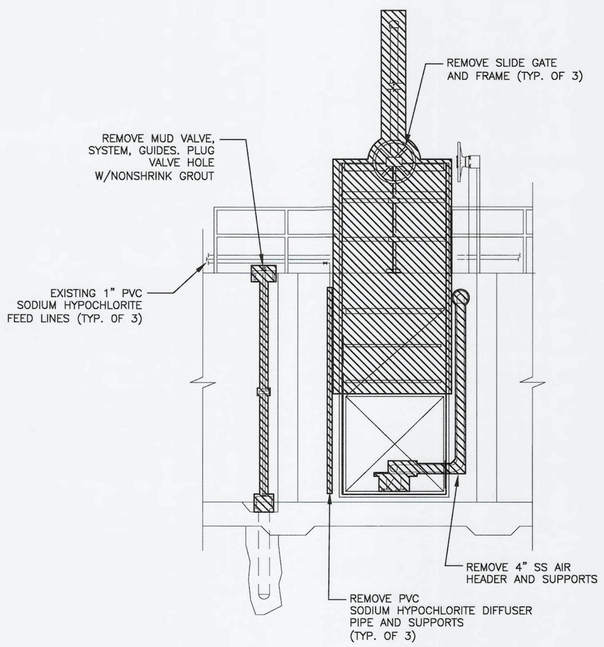

1 SECTION
SCALE: 1/4" = 1'

REV.NO.	DESCRIPTIONS	DATE
	REVISIONS	

SEAL: ANTHONY L. PEVEC, LICENSE No. 66706, STATE OF FLORIDA, PROFESSIONAL ENGINEER
ANTHONY L. PEVEC, P.E.
No. 66706
9/19/2019

SEAL

McKIM&CREED
1365 Hamlet Avenue
Clearwater, Florida 33756
Phone: (727)442-7196, Fax: (727)461-3827
CA LIC No. 29588
www.mckimcreed.com

Manatee County FLORIDA

SWWRF
CCC REHAB AND
RECHARGE WELL PS PROJECT

CCC DEMOLITION PLAN

DATE:	SEPTEMBER, 2019
MCE PROJ. #	1024-0171
DRAWN	CN
DESIGNED	TP
CHECKED	JV
PROJ. MGR.	TP

SCALE
HORIZONTAL: NA
VERTICAL: NA

DRAWING NUMBER
M-01

STATUS: ISSUED FOR BID
REVISION

S:\1024\0171\00-Drawings\MECHANICAL\M-01 1024017l.dwg, 9/19/2019 3:44:58 PM, Carlos Najarro

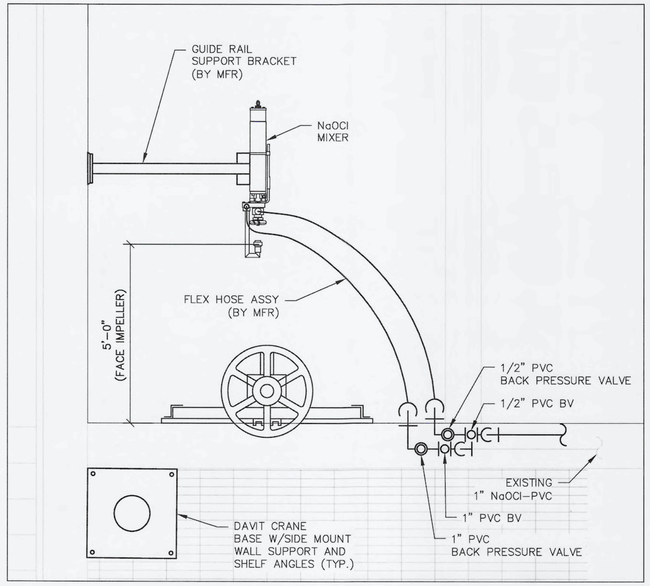

ENLARGED PLAN (TYP.)
SCALE: 1/2" = 1'-0"

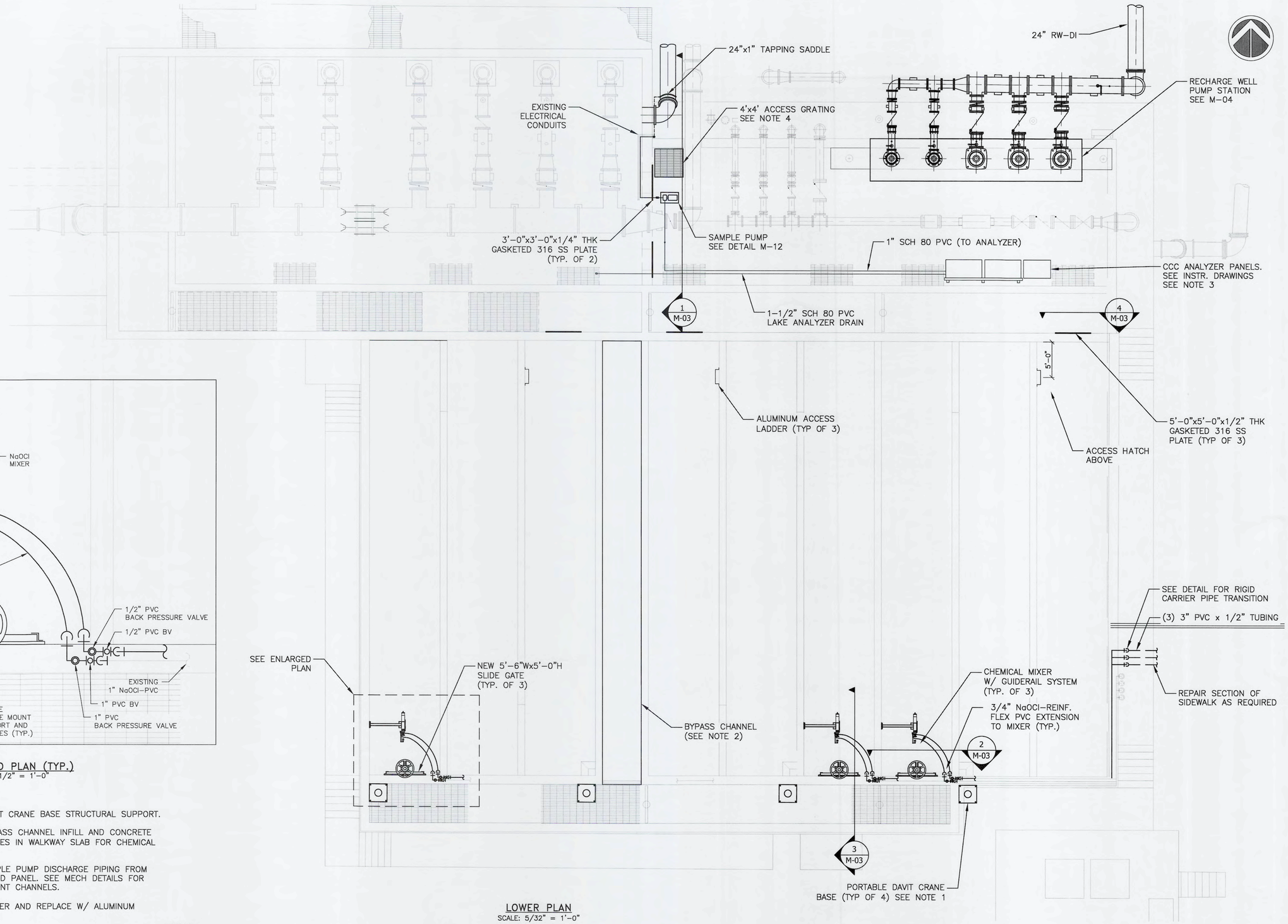

LOWER PLAN
SCALE: 5/32" = 1'-0"

NOTES:

1. SEE STRUCTURAL DRAWINGS FOR DAVIT CRANE BASE STRUCTURAL SUPPORT.
2. SEE STRUCTURAL DRAWINGS FOR BYPASS CHANNEL INFILL AND CONCRETE WALKWAY. PROVIDE (2) 2" PVC SLEEVES IN WALKWAY SLAB FOR CHEMICAL PIPING.
3. CONTRACTOR SHALL ROUTE NEW SAMPLE PUMP DISCHARGE PIPING FROM EACH CCC TO THE NEW MARINE BOARD PANEL. SEE MECH DETAILS FOR SAMPLE PIPING MODS AT CCC EFFLUENT CHANNELS.
4. REMOVE EXISTING ACCESS HATCH COVER AND REPLACE W/ ALUMINUM GRATING.

REV.NO.	DESCRIPTIONS	DATE

REVISIONS

ANTHONY L. FELICE, P.E. No. 66706

SEAL

McKIM&CREED
1365 Hamlet Avenue
Clearwater, Florida 33756
Phone: (727)442-7196, Fax: (727)461-3827
CA LIC No. 29588
www.mckimcreed.com

Manatee County FLORIDA

SWWRF CCC REHAB AND RECHARGE WELL PS PROJECT

CCC PROPOSED PLAN (LOWER)

DATE:	SEPTEMBER, 2019
MCE PROJ. #	1024-0171
DRAWN	CN
DESIGNED	TP
CHECKED	JV
PROJ. MGR.	TP

SCALE
HORIZONTAL: NA
VERTICAL: NA

DRAWING NUMBER
M-02

STATUS: ISSUED FOR BID
REVISION

S:\1024\0171\05-Drawings\MECHANICAL\M-02 1024017I.dwg, 9/16/2019 3:45:08 PM, Carlos Najera

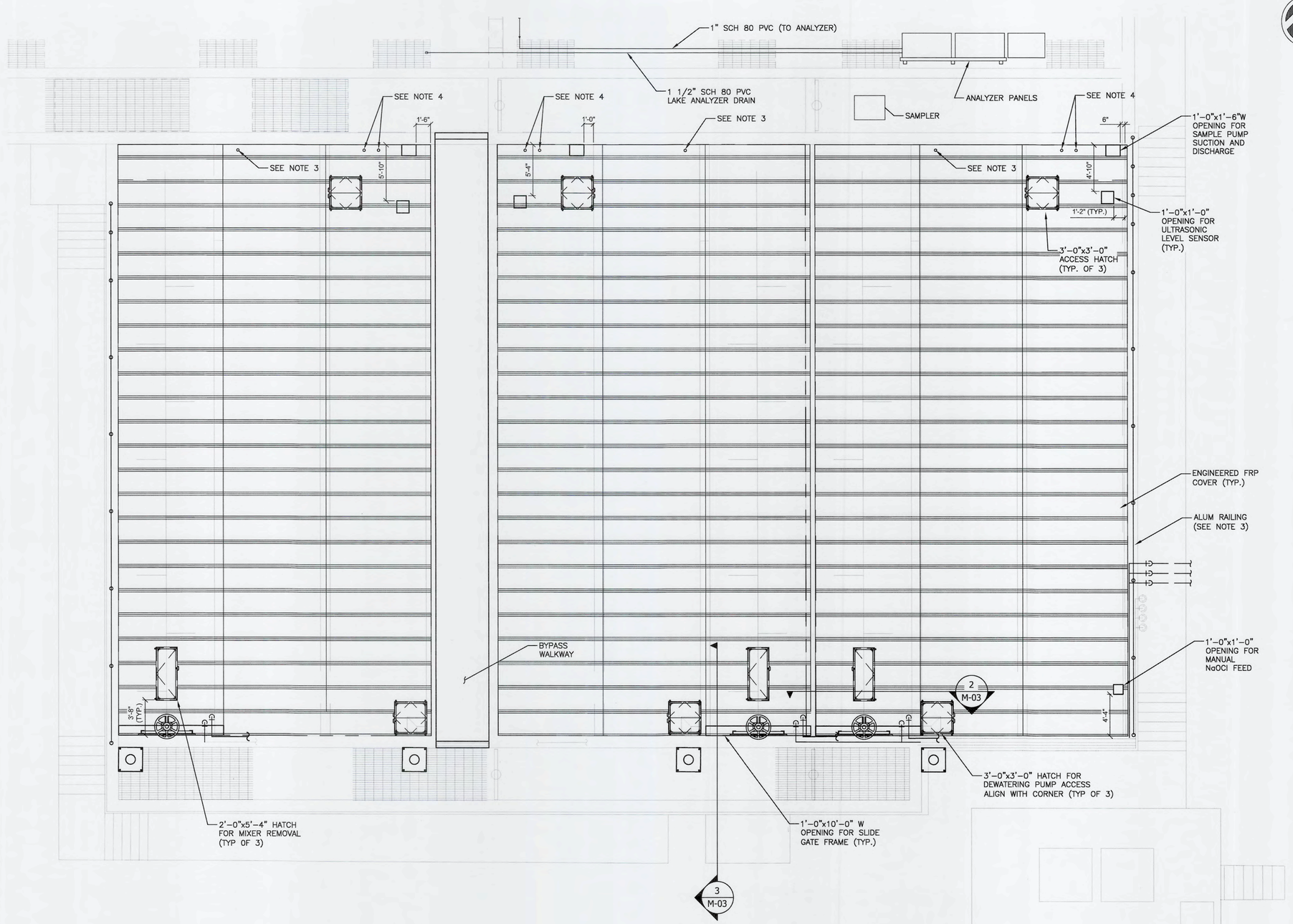

UPPER PLAN

SCALE: 3/16" = 1'

NOTES:

1. OPENING LOCATIONS FOR ULTRASONIC LEVEL SENSORS, SAMPLE LINES, CHEMICAL LINES, TO BE FIELD VERIFIED BY CONTRACTOR.
2. OPENING SIZES AND LOCATIONS FOR NEW SLIDE GATES, PUMPS, AND MIXERS TO BE COORDINATED WITH EQUIPMENT PROVIDED BY CONTRACTOR.
3. FRP COVER PENETRATION FOR AMMONIA PROBE. PENETRATION TO BE LARGE ENOUGH FOR PROBE PROVIDED. CONTRACTOR SHALL COORDINATE WITH PROBE AND COVER MANUFACTURERS.
4. FRP COVER PENETRATION FOR ORP AND TOTAL RESIDUAL PROBES. PENETRATION TO BE LARGE ENOUGH FOR PROBE PROVIDED. CONTRACTOR SHALL COORDINATE WITH PROBE AND COVER MANUFACTURERS.

REV.NO.	DESCRIPTIONS	DATE
	REVISIONS	

ANTHONY L. PEVEC LICENSE No. 66706 STATE OF FLORIDA PROFESSIONAL ENGINEER
ANTHONY L. PEVEC, P.E.
No. 66706

SEAL

McKIM&CREED
1365 Hamlet Avenue
Clearwater, Florida 33756
Phone: (727)442-7196, Fax: (727)461-3827
CA LIC No. 29588
www.mckimcreed.com

Manatee County FLORIDA

SWWRF
CCC REHAB AND
RECHARGE WELL PS PROJECT

CCC PROPOSED PLAN (UPPER)

DATE:	SEPTEMBER, 2019
MCE PROJ. #	1024-0171
DRAWN	CN
DESIGNED	TP
CHECKED	JV
PROJ. MGR.	TP

SCALE
HORIZONTAL: NA
VERTICAL: NA

DRAWING NUMBER
M-02A

STATUS: ISSUED FOR BID
REVISION

S:\1024\0171\B5-Drawings\MECHANICAL\M-02A 1024017I.dwg, 9/16/2019 3:45:17 PM, Carlos Najera

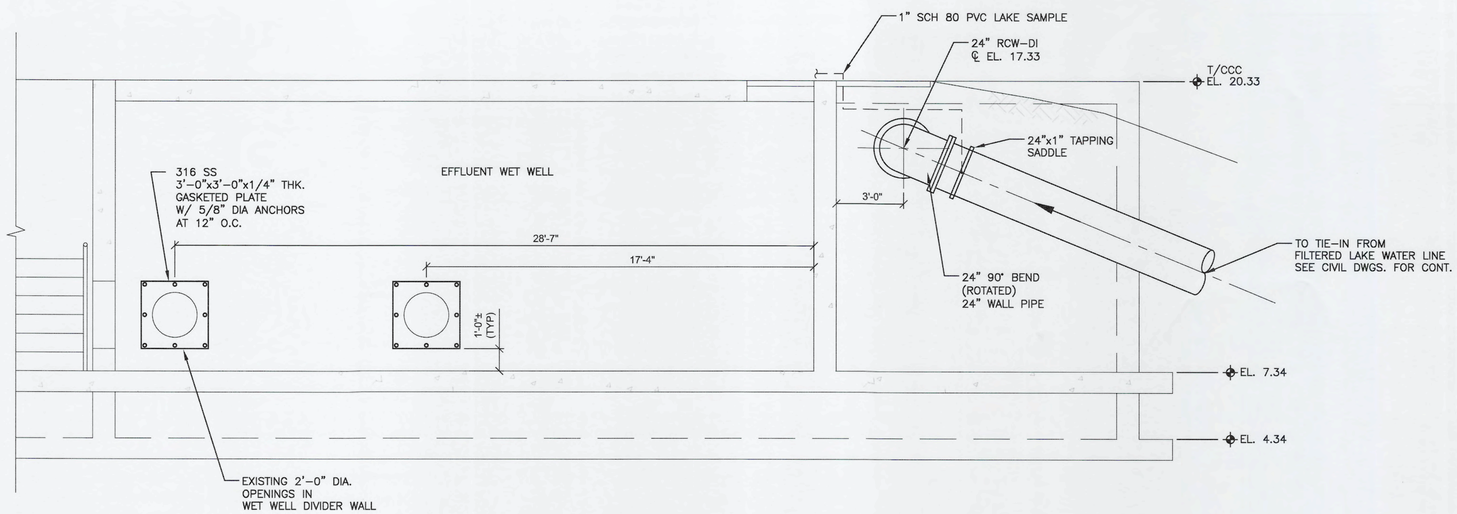

SECTION 1
SCALE: 5/16" = 1'

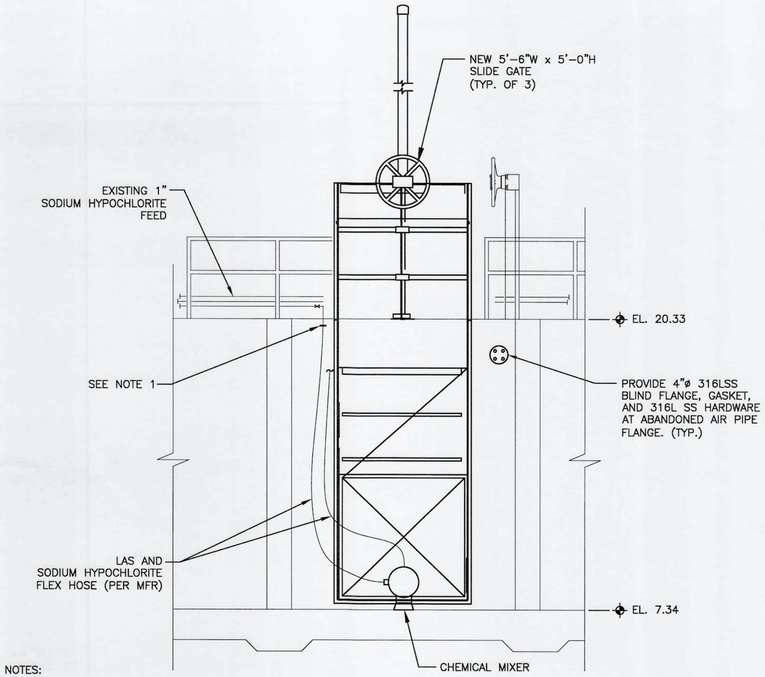

NOTES:

1. FLEX HOSE/CAM LOCK CONNECTIONS PER MFR.
2. CONNECTION TO MIXER BODY INJECTION FITTING PER MIXER MFG.

SECTION 2
SCALE: 5/16" = 1'

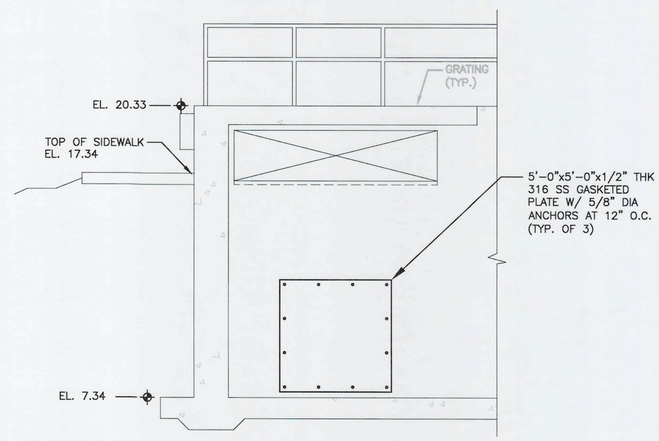

SECTION 4
SCALE: 5/16" = 1'

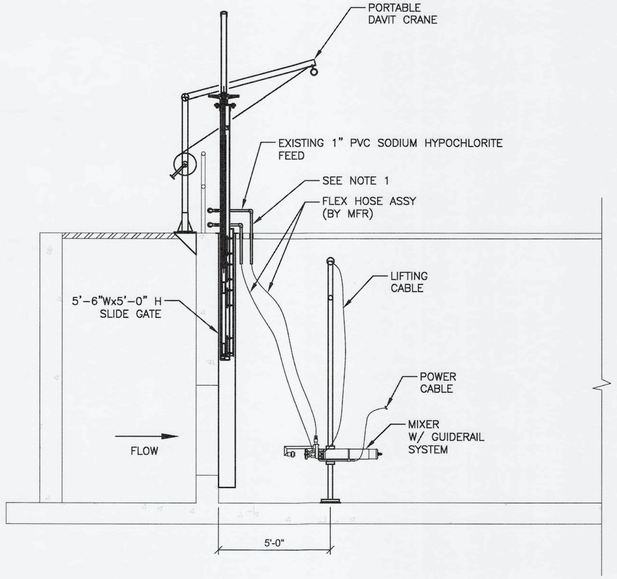

SECTION 3
SCALE: 5/16" = 1'

NOTES:

1. PROVIDE VITON-GROMMETED PASSAGES THROUGH FRP COVERS FOR CHEMICAL LINE PENETRATIONS. (TYP.)

REV.NO.	DESCRIPTIONS	DATE
	REVISIONS	

ANTHONY L. PEVEC, P.E.
No. 66706

McKIM&CREED
1365 Hamlet Avenue
Clearwater, Florida 33756
Phone: (727)442-7196, Fax: (727)461-3827
CA LIC No. 29588
www.mckimcreed.com

Manatee County FLORIDA

SWWRF
CCC REHAB AND RECHARGE WELL PS PROJECT

CCC SECTIONS

DATE:	SEPTEMBER, 2019
MCE PROJ. #	1024-0171
DRAWN	CN
DESIGNED	TP
CHECKED	JV
PROJ. MGR.	TP

SCALE
HORIZONTAL: NA
VERTICAL: NA

DRAWING NUMBER
M-03

STATUS: ISSUED FOR BID
REVISION

S:\1024\0171\BD-Drawings\MECHANICAL\M-03 1024017I.dwg, 9/16/2019 3:45:29 PM, Carlos Nejarro

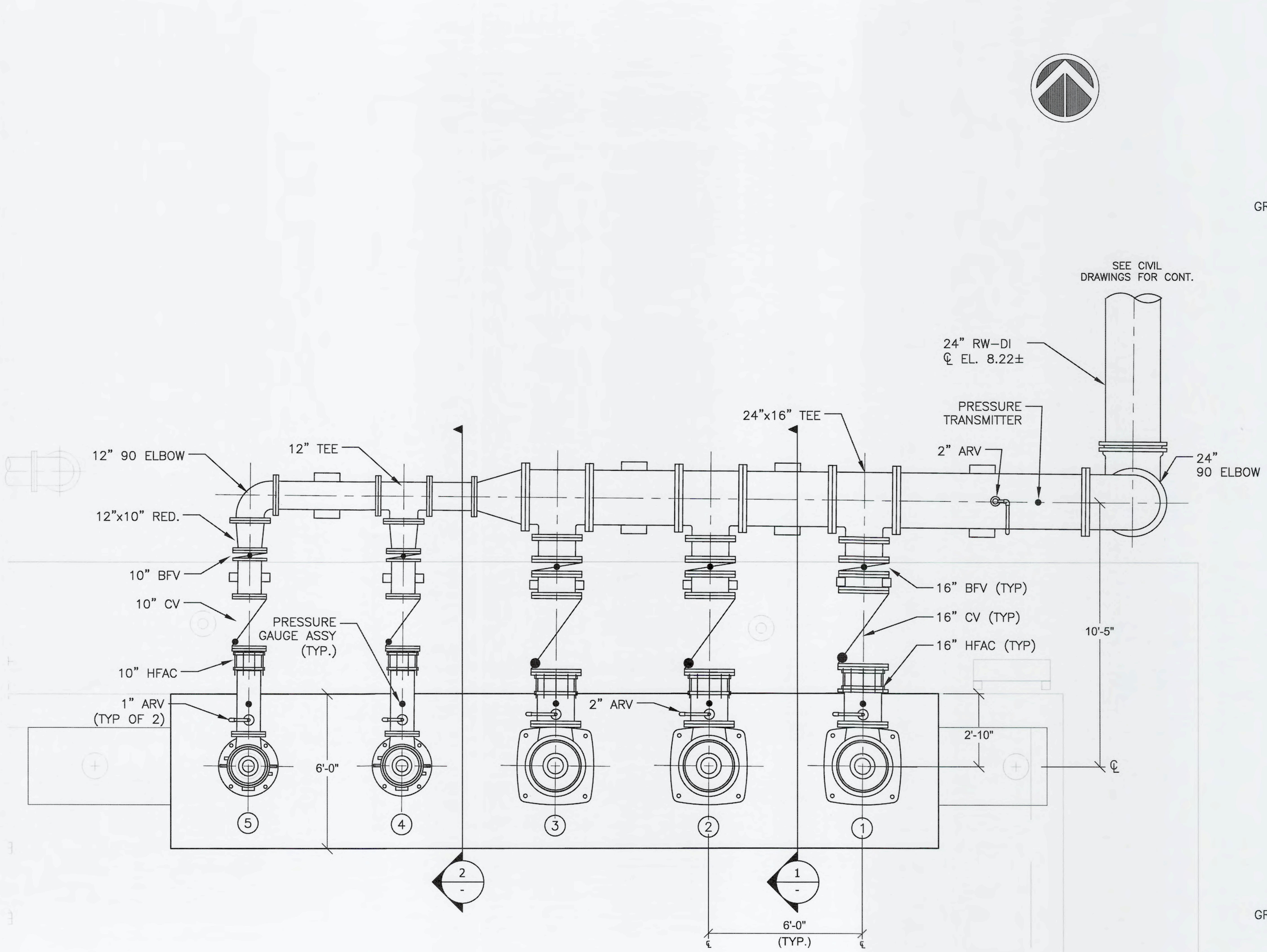

RECHARGE WELL PUMP STATION PLAN

SCALE: 3/8" = 1'-0"

PUMP I.D. TABLE
(1) RECHARGE WELL PUMP NO 1
(2) RECHARGE WELL PUMP NO 2
(3) RECHARGE WELL PUMP NO 3
(4) RECHARGE WELL JOCKEY PUMP NO 1
(5) RECHARGE WELL JOCKEY PUMP NO 2

NOTE:

1. SEE ELECTRICAL DRAWINGS FOR LOCATION OF PUMP DISCONNECT SWITCHES AND JUNCTION BOXES.
2. PUMP MANUFACTURER SHALL PROVIDE SOLE-PLATE WITH PUMPS TO PROVIDE ANCHOR BOLT CLEARANCES CALLED OUT ON STRUCTURAL DRAWINGS.

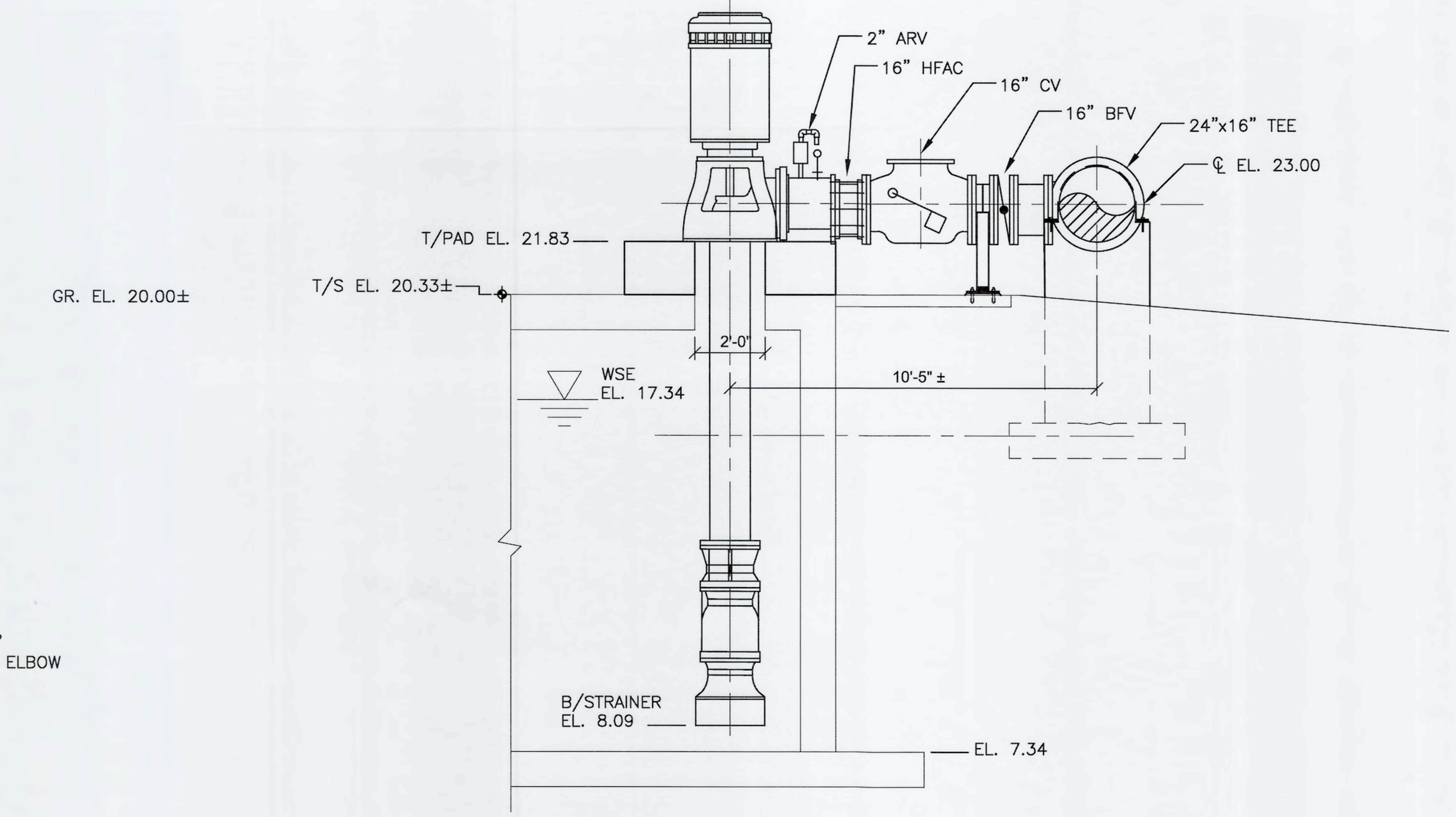

SECTION 1

SCALE: 3/8" = 1'-0"

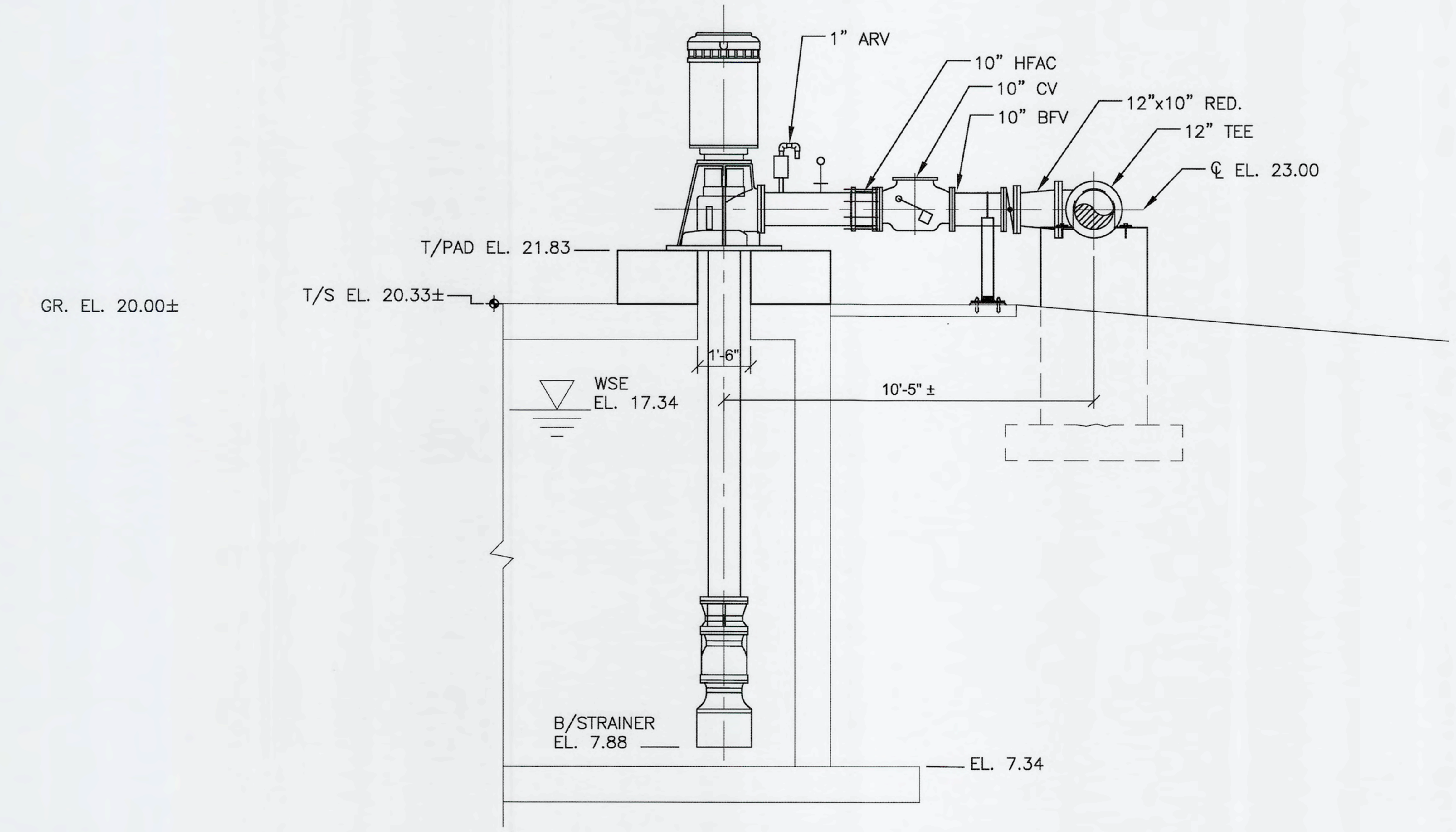

SECTION 2

SCALE: 3/8" = 1'-0"

REV.NO.	DESCRIPTIONS REVISIONS	DATE

SEAL: ANTHONY L. PEVEC LICENSE No. 66706 STATE OF FLORIDA PROFESSIONAL ENGINEER

ANTHONY L. PEVEC, P.E. No. 66706

SEAL

McKIM&CREED
1365 Hamlet Avenue
Clearwater, Florida 33756
Phone: (727)442-7196, Fax: (727)461-3827
CA LIC No. 29588
www.mckimcreed.com

Manatee County FLORIDA

SWWRF
CCC REHAB AND RECHARGE WELL PS PROJECT

RECHARGE WELL PUMP STATION PLAN AND SECTIONS

DATE:	SEPTEMBER, 2019
MCE PROJ. #	1024-0171
DRAWN	CN
DESIGNED	TP
CHECKED	JV
PROJ. MGR.	TP

SCALE HORIZONTAL: NA VERTICAL: NA

DRAWING NUMBER M-04

STATUS: ISSUED FOR BID

REVISION

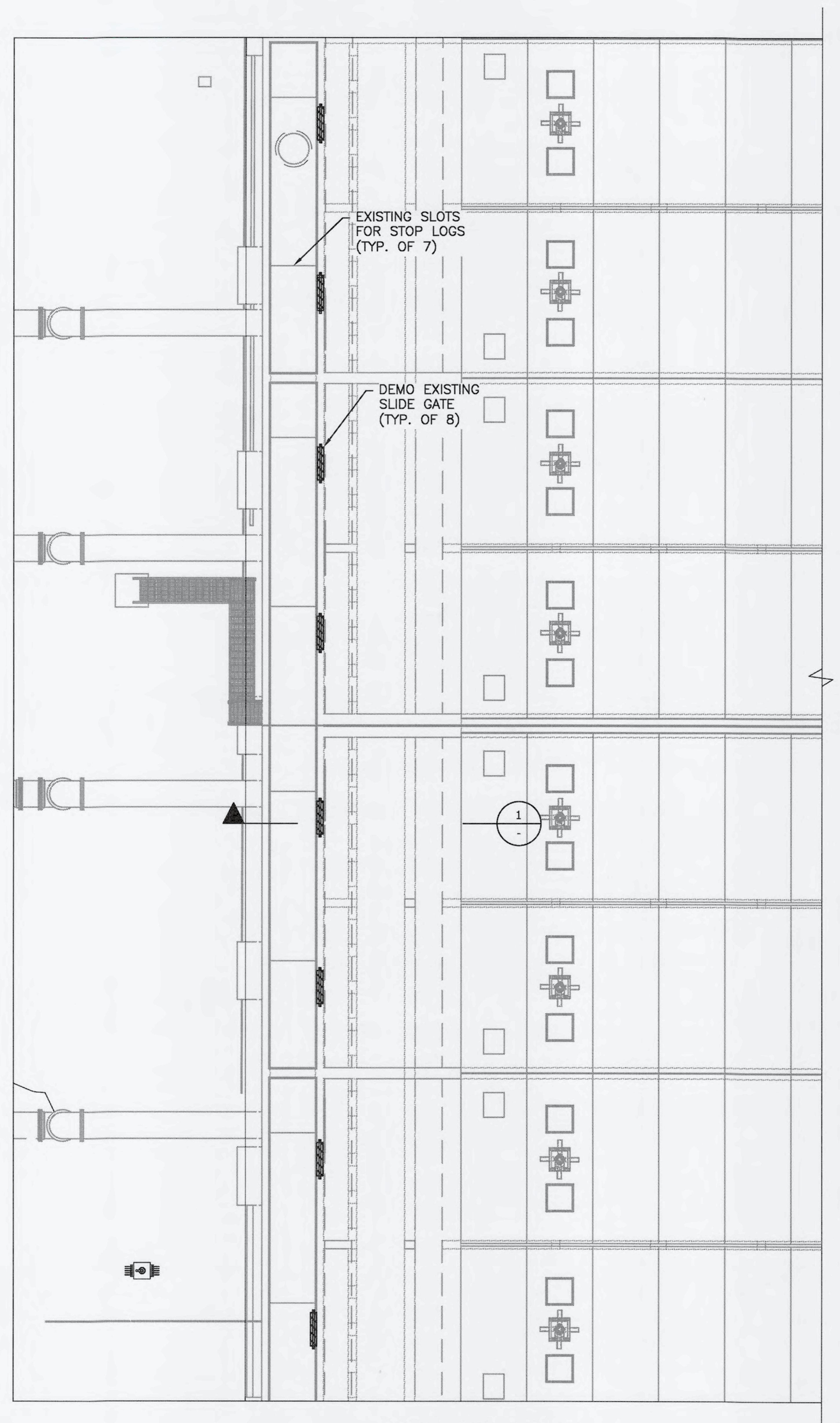

TOP PARTIAL PLAN
SCALE: 3/32" = 1'

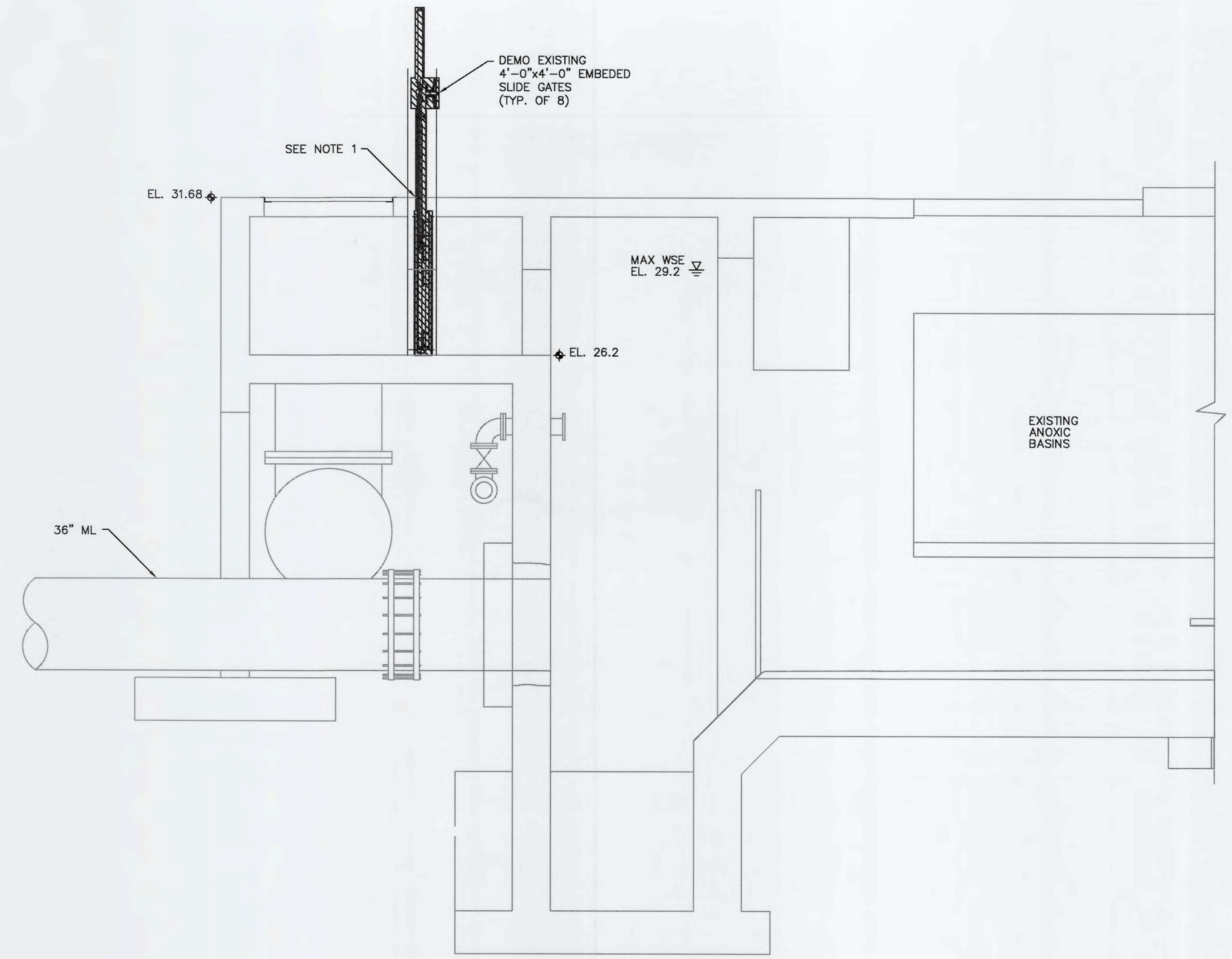

SECTION 1
SCALE: 3/8" = 1'

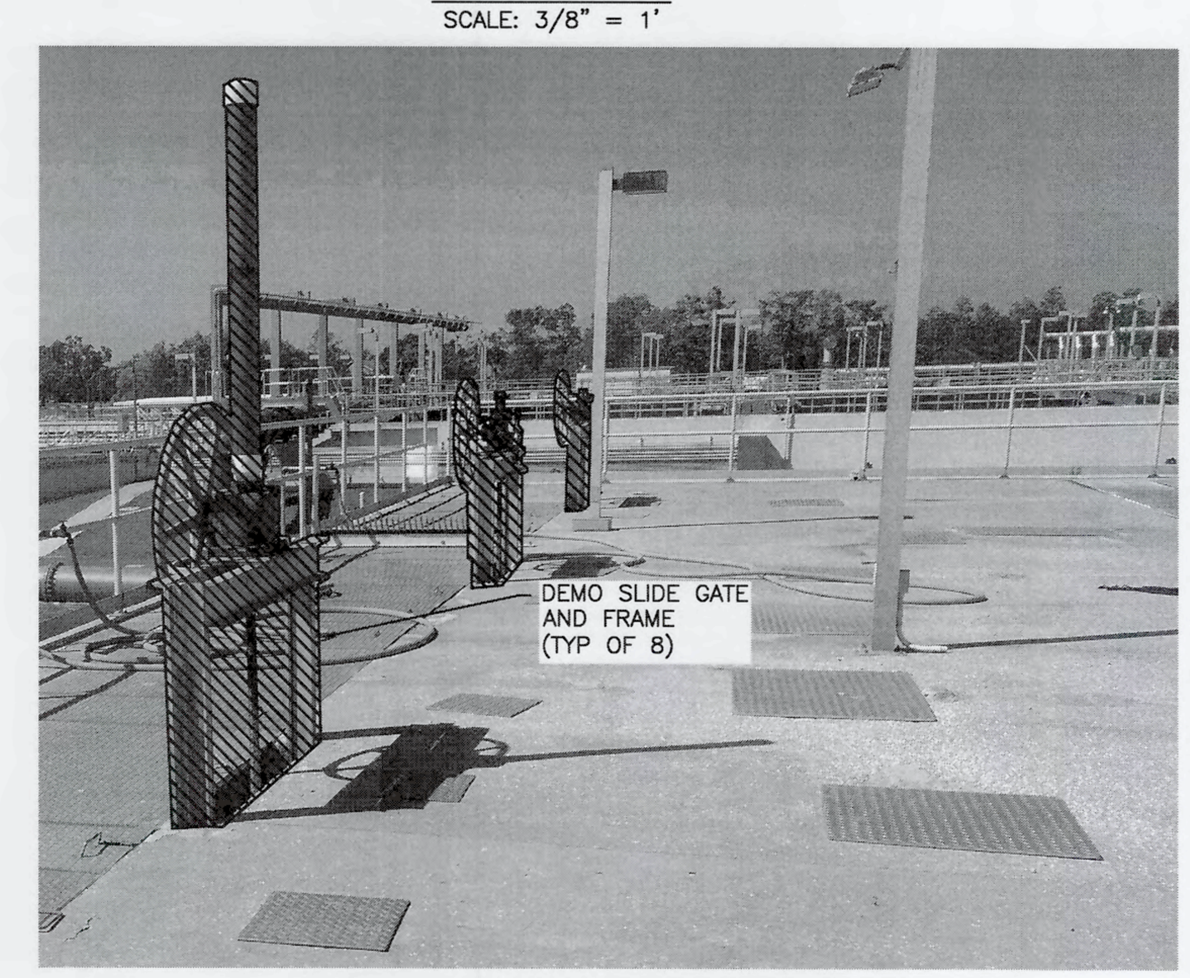

ELEVATION
NTS

NOTES:

1. CONTRACTOR SHALL CUT SLIDE GATE FRAME FLUSH W/ T/CONCRETE

NOTES:

1. SEE STRUCTURAL DRAWINGS FOR ADDITIONAL DEMO WORK IN THIS AREA.

REV.NO.	DESCRIPTIONS	DATE
	REVISIONS	

ANTHONY L. PEVEC LICENSE No. 66706 STATE OF FLORIDA PROFESSIONAL ENGINEER

ANTHONY L. PEVEC, P.E.
No. 66706

SEAL

McKIM&CREED
1365 Hamlet Avenue
Clearwater, Florida 33756
Phone: (727)442-7196, Fax: (727)461-3827
CA LIC No. 29588
www.mckimcreed.com

Manatee County
FLORIDA

SWWRF
CCC REHAB AND
RECHARGE WELL PS PROJECT

ANOXIC BASIN DEMOLITION PLAN

DATE:	SEPTEMBER, 2019
MCE PROJ. #	1024-0171
DRAWN	CN
DESIGNED	TP
CHECKED	JV
PROJ. MGR.	TP

SCALE
HORIZONTAL: NA
VERTICAL: NA

DRAWING NUMBER
M-05

STATUS: ISSUED FOR BID
REVISION

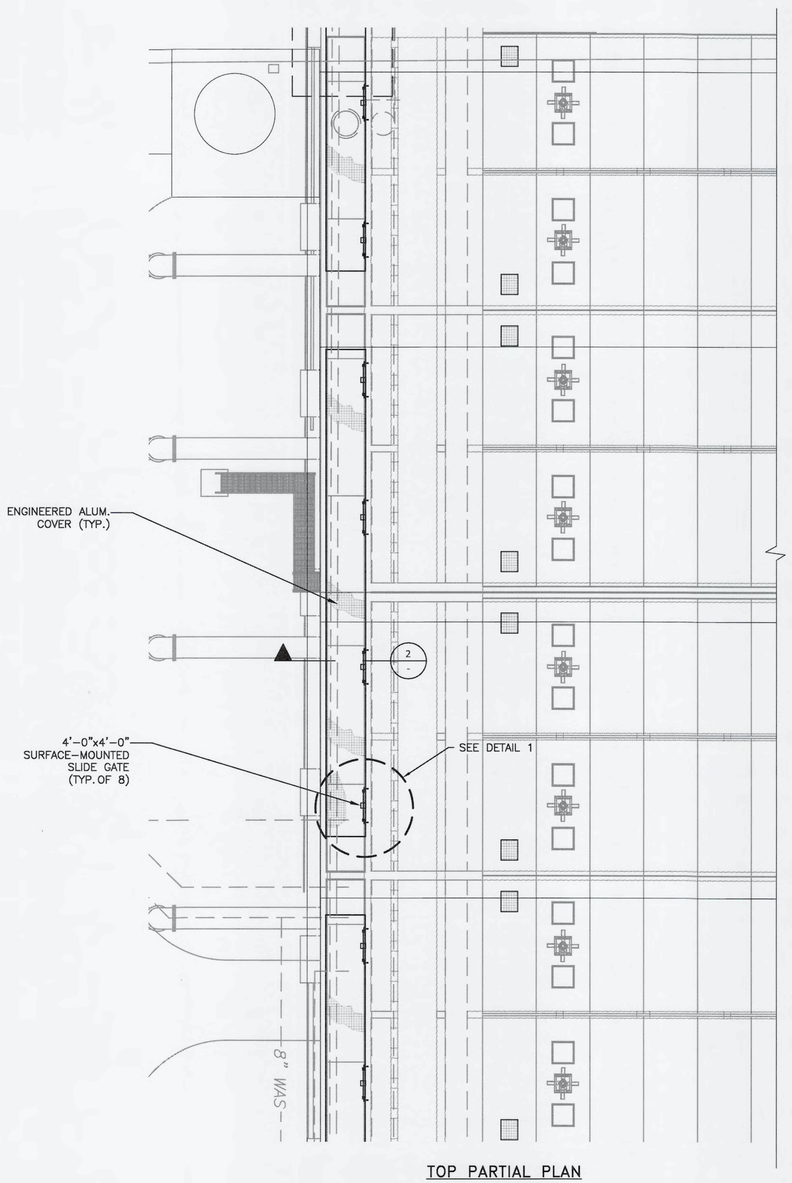

TOP PARTIAL PLAN
SCALE: 3/32" = 1'

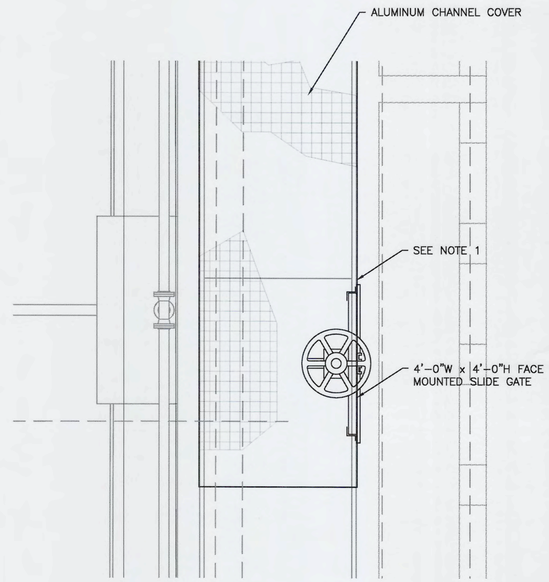

DETAIL 1
SCALE: 3/8" = 1'

NOTE:
1. PROVIDE CUT-OUT IN ALUMINUM CHANNEL COVER FOR SLIDE GATES. PROVIDE NEOPRENE GASKET WITH 316SS HARDWARE TO COVER GAP BETWEEN SLIDE GATE AND ALUMINUM COVER (TYP.).

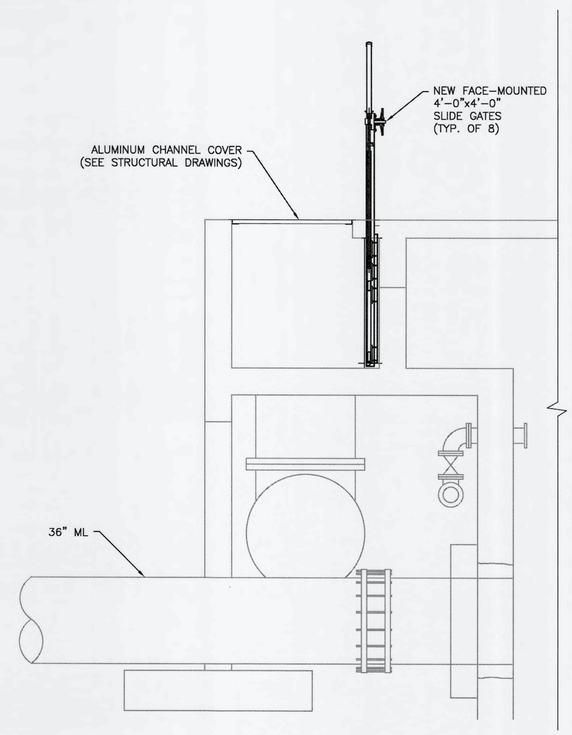

SECTION 2
SCALE: 3/8" = 1'

REV.NO.	DESCRIPTIONS	DATE

REVISIONS

ANTHONY L. PEVEC LICENSE No. 66706 STATE OF FLORIDA PROFESSIONAL ENGINEER
ANTHONY L. PEVEC, P.E.
No. 66706

SEAL

McKIM&CREED
1365 Hamlet Avenue
Clearwater, Florida 33756
Phone: (727)442-7196, Fax: (727)461-3827
CA LIC No. 29588
www.mckimcreed.com

Manatee County FLORIDA

SWWRF CCC REHAB AND RECHARGE WELL PS PROJECT

ANOXIC BASIN PROPOSED PLAN

DATE:	SEPTEMBER, 2019
MCE PROJ. #	1024-0171
DRAWN	CN
DESIGNED	TP
CHECKED	JV
PROJ. MGR.	TP

SCALE
HORIZONTAL: NA
VERTICAL: NA

DRAWING NUMBER
M-06

STATUS: ISSUED FOR BID
REVISION

S:\1024\0171\05-Drawings\MECHANICAL\M-06 1024017I.dwg, 9/16/2019 3:46:05 PM, Carlos Nojarro

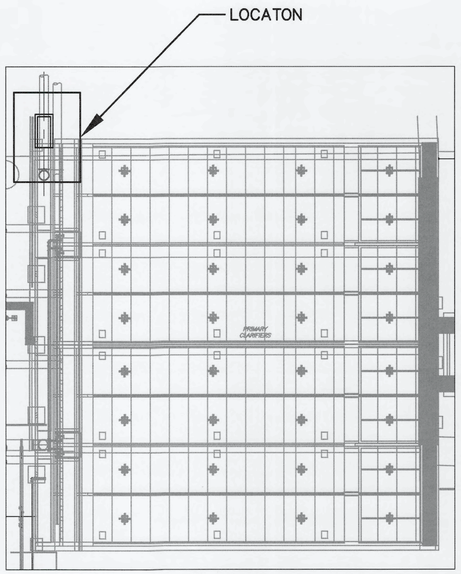

KEY PLAN
SCALE: 1" = 30'

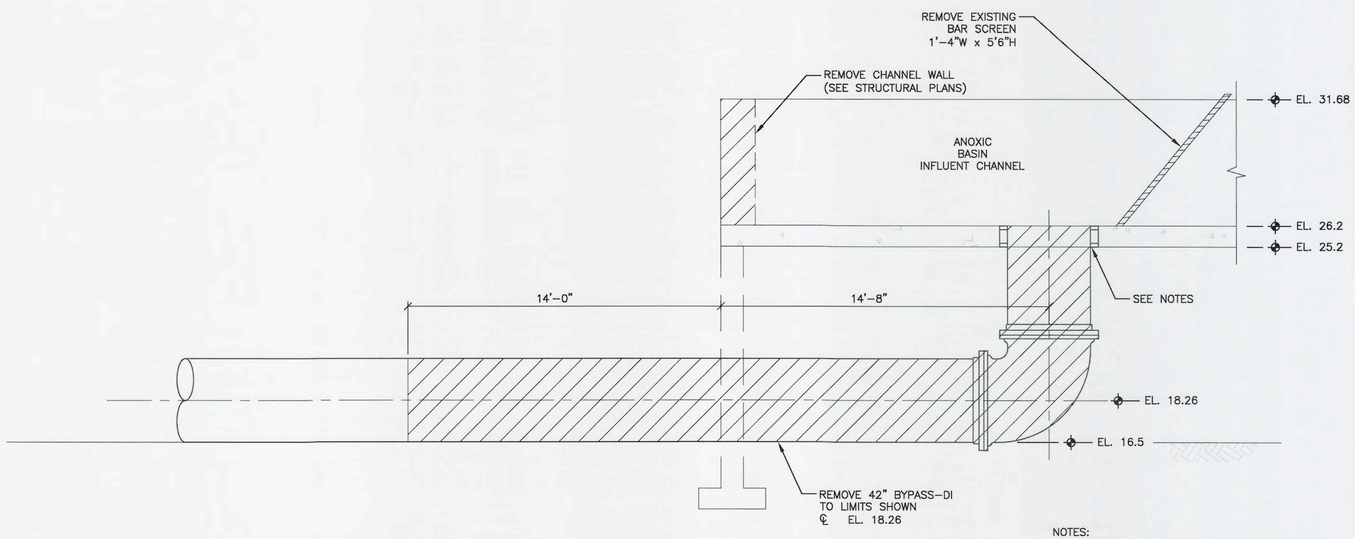

SECTION A
SCALE: 5/16" = 1'

NOTES:
1. DRILL AND EPOXY NO. 5 REBAR DOWELS AT CENTER OF SLAB EVERY 45 DEGREES. PROVIDE 5" EMBEDMENT AND 12" LAP MINIMUM.
2. PROVIDE HYDROPHILIC STICK-ON WATERSTOP AROUND CIRCUMFERENCE OF OPENING.
3. FILL HOLE IN SLAB WITH NON-SRINK GROUT PER DRAWINGS SPECIFICATIONS.

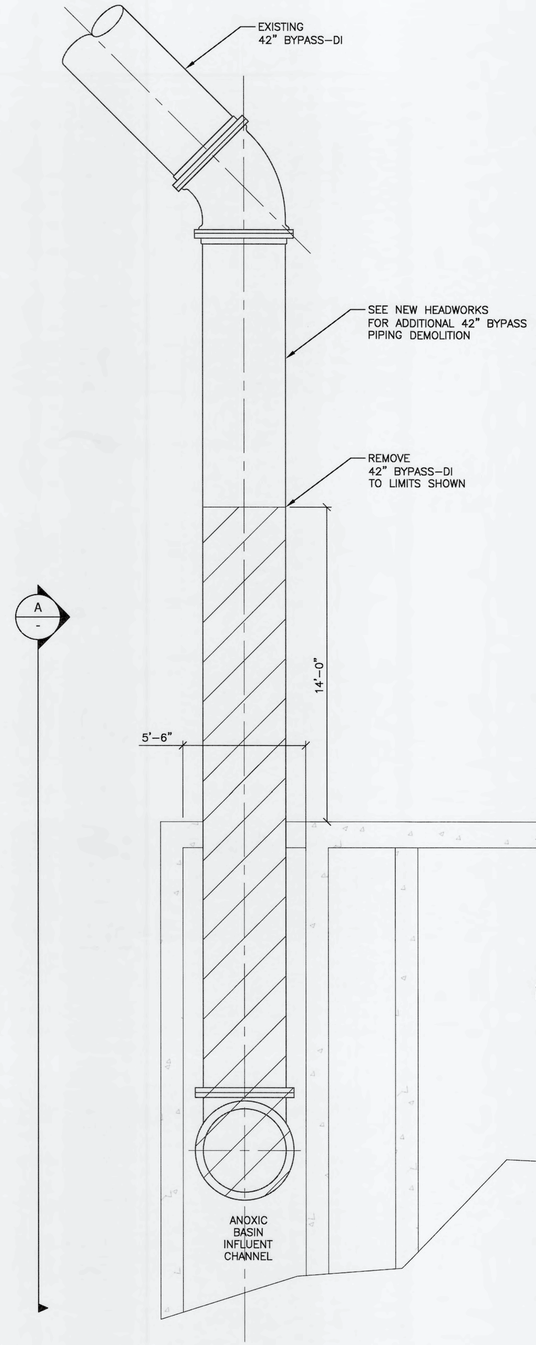

PARTIAL PLAN
SCALE: 5/16" = 1'

REV.NO.	DESCRIPTIONS	DATE

REVISIONS

SEAL
ANTHONY L. PEVEC, LICENSE No.66706 STATE OF FLORIDA PROFESSIONAL ENGINEER
ANTHONY L. PEVEC, P.E.
No. 66706

SEAL

McKIM&CREED
1365 Hamlet Avenue
Clearwater, Florida 33756
Phone: (727)442-7196, Fax: (727)461-3827
CA LIC No. 29588
www.mckimcreed.com

Manatee County FLORIDA

SWWRF
CCC REHAB AND
RECHARGE WELL PS PROJECT

ANOXIC BASIN INFLUENT CHANNEL
DEMOLITION PLAN AND SECTION

DATE:	SEPTEMBER, 2019
MCE PROJ. #	1024-0171
DRAWN	CN
DESIGNED	TP
CHECKED	JV
PROJ. MGR.	TP

SCALE
HORIZONTAL: NA
VERTICAL: NA

DRAWING NUMBER
M-07

STATUS: ISSUED FOR BID
REVISION

S:\1024\0171\90-Drawings\MECHANICAL\M-07-10240171.dwg, 9/16/2019 3:46:15 PM, Carlos Najarro

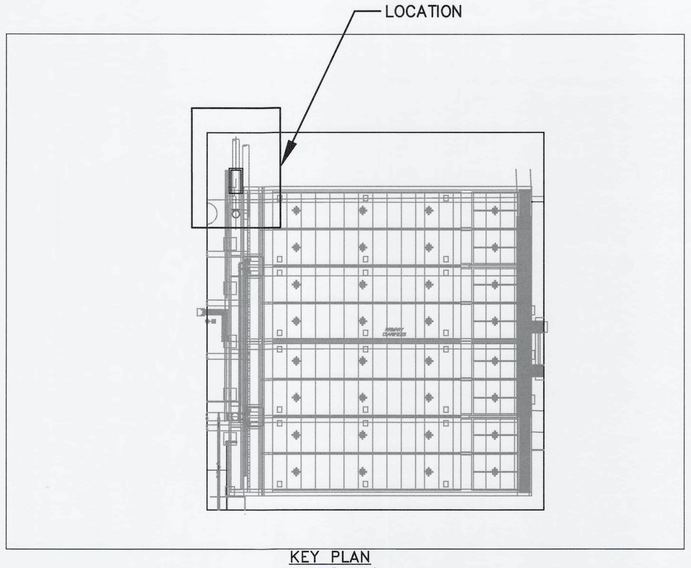

KEY PLAN
SCALE: 1" = 40'

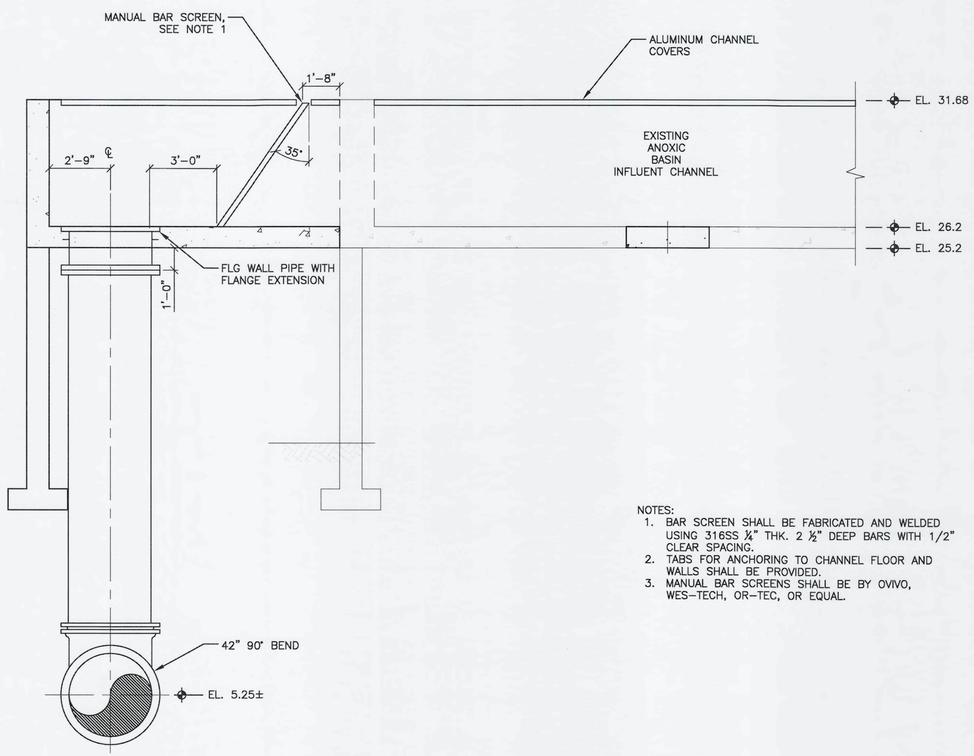

SECTION A
SCALE: 5/16" = 1'

NOTES:
1. BAR SCREEN SHALL BE FABRICATED AND WELDED USING 316SS ¼" THK. 2 ½" DEEP BARS WITH 1/2" CLEAR SPACING.
2. TABS FOR ANCHORING TO CHANNEL FLOOR AND WALLS SHALL BE PROVIDED.
3. MANUAL BAR SCREENS SHALL BE BY OVIVO, WES-TECH, OR-TEC, OR EQUAL.

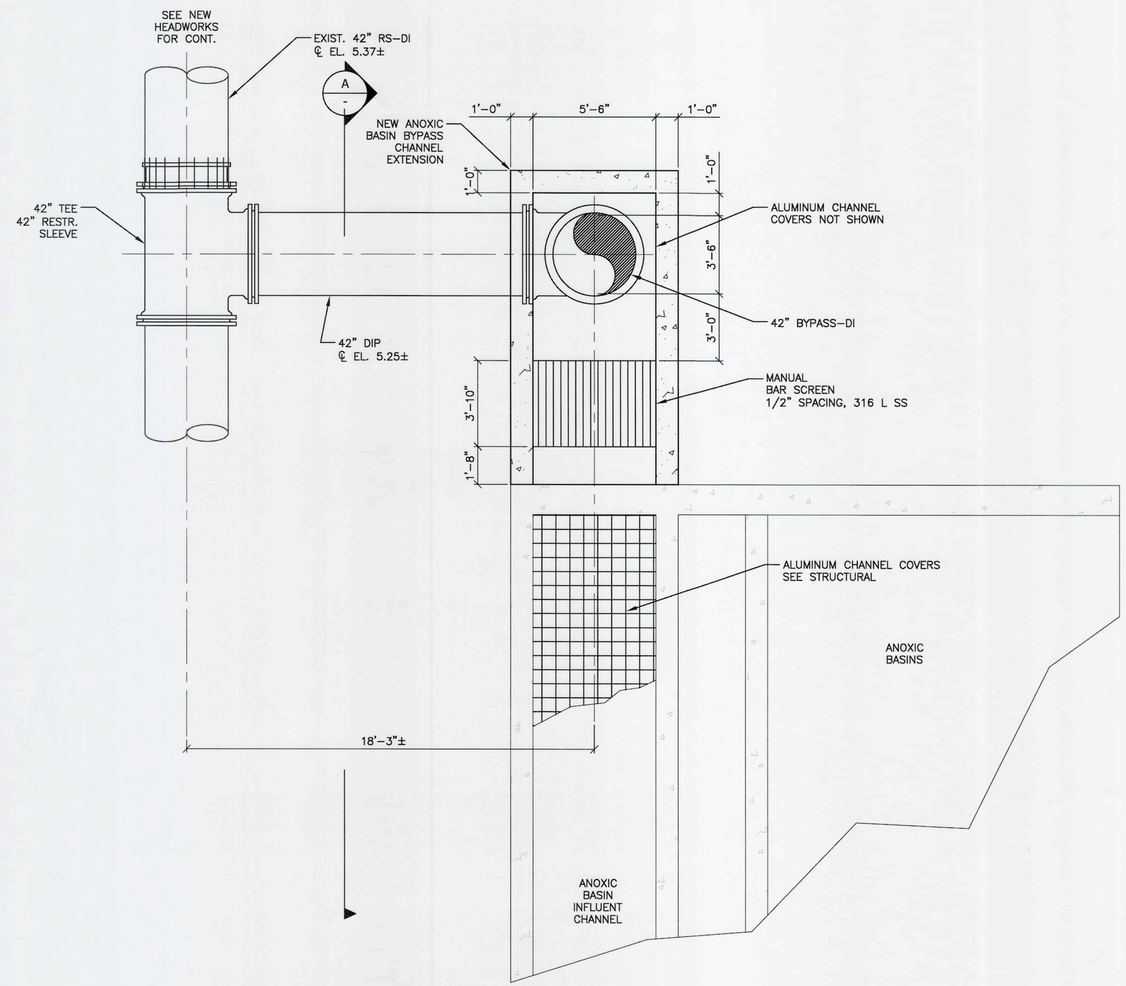

PARTIAL PLAN
SCALE: 5/16" = 1'

REV.NO.	DESCRIPTIONS	DATE
	REVISIONS	

ANTHONY L. FEVEC, P.E. No. 66706

SEAL

McKIM&CREED
1365 Hamlet Avenue
Clearwater, Florida 33756
Phone: (727)442-7196, Fax: (727)461-3827
CA LIC No. 29588
www.mckimcreed.com

Manatee County FLORIDA

SWWRF
CCC REHAB AND
RECHARGE WELL PS PROJECT

ANOXIC BASIN INFLUENT CHANNEL
PROPOSED PLAN AND SECTION

DATE:	SEPTEMBER, 2019
MCE PROJ. #	1024-0171
DRAWN	CN
DESIGNED	TP
CHECKED	JV
PROJ. MGR.	TP

SCALE
HORIZONTAL: NA
VERTICAL: NA

DRAWING NUMBER
M-08

STATUS: ISSUED FOR BID
REVISION

S:\1024\0171\05-Drawings\MECHANICAL\M-08 1024017I.dwg, 9/16/2019 3:46:18 PM, Carlos Nojiero

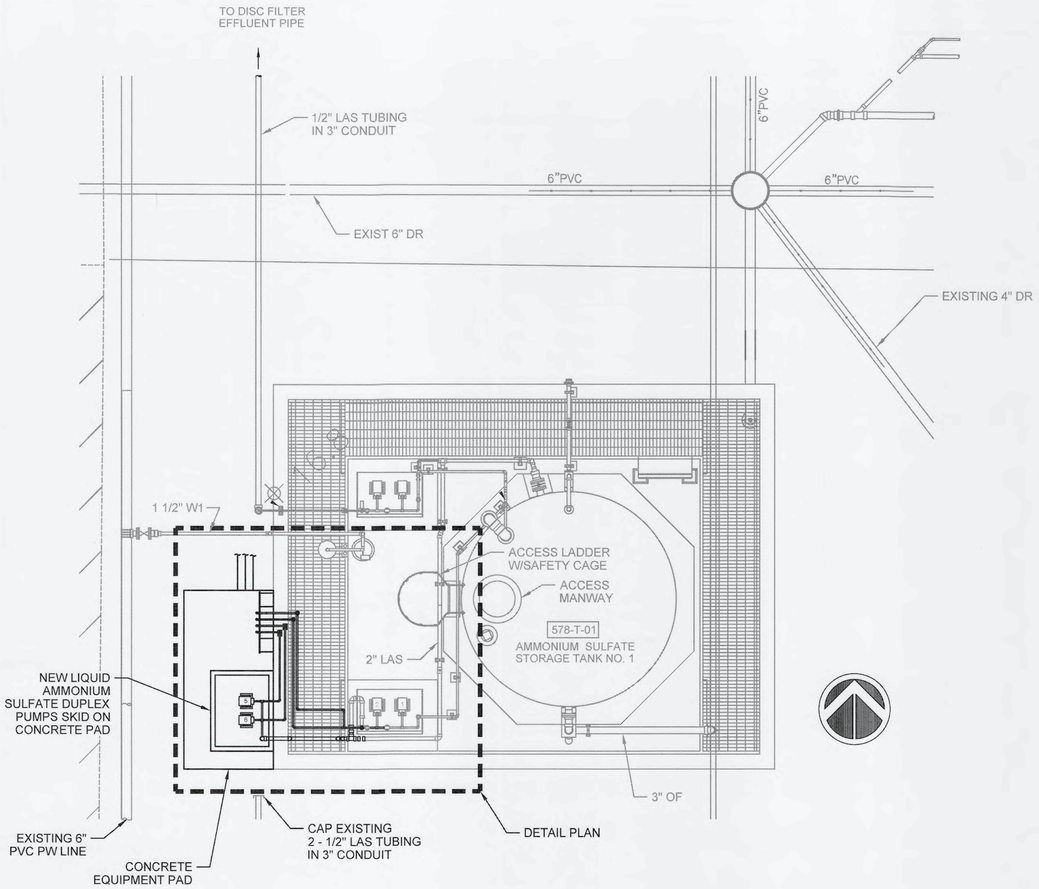

LAS STORAGE AND FEED SYSTEM VIEW

1/4"=1'-0"

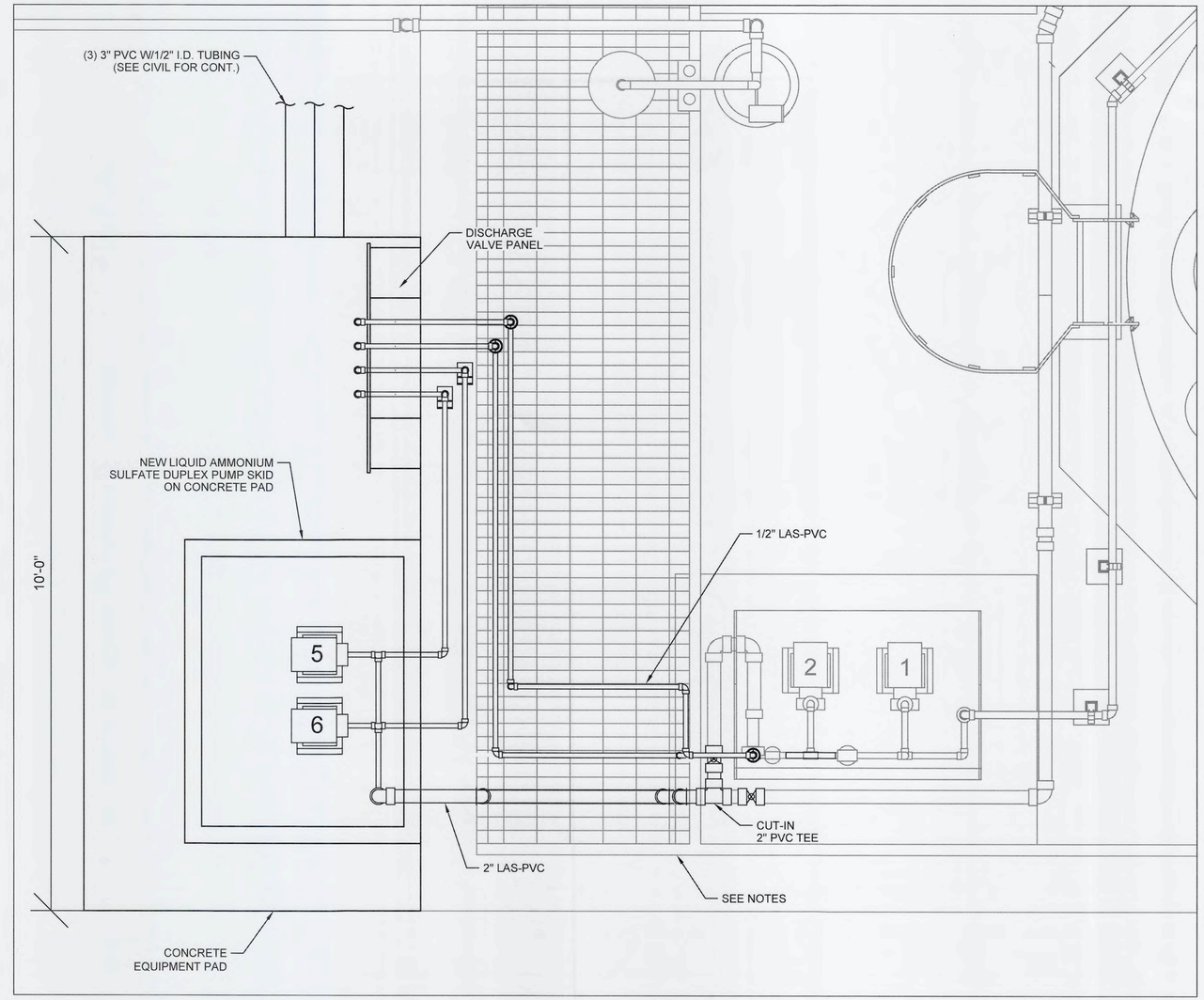

DETAIL PLAN

1 "= 1'-0"

NOTES:

1. ROUTE PIPING BENEATH EXISTING GRATING.
2. LIMIT CUTTING OF EXISTING GRATING FOR NEW PIPING.
3. SUPPORT GRATING AROUND NEW GRATING PENETRATIONS WITH FRP ANGLE AND 31LSS ANCHORS.

REV.NO.	DESCRIPTIONS	DATE

REVISIONS

ANTHONY L. FEVIER LICENSE No.66706 STATE OF FLORIDA PROFESSIONAL ENGINEER
ANTHONY L. FEVIER, P.E.
No. 66706

SEAL

McKIM&CREED
1365 Hamlet Avenue
Clearwater, Florida 33756
Phone: (727)442-7196, Fax: (727)461-3827
CA LIC No. 29588
www.mckimcreed.com

Manatee County FLORIDA

SWWRF
CCC REHAB AND
RECHARGE WELL PS PROJECT

LIQUID AMMONIUM SULFATE (LAS)
STORAGE AND FEED SYSTEM PLAN VIEW

DATE:	SEPTEMBER, 2019
MCE PROJ. #	1024-0171
DRAWN	CN
DESIGNED	TP
CHECKED	JV
PROJ. MGR.	TP

SCALE
HORIZONTAL: NA
VERTICAL: NA

DRAWING NUMBER
M-09

STATUS: ISSUED FOR BID
REVISION

S:\1024\0171\80-Drawings\MECHANICAL\M-09_1024071.dwg, 9/17/2019 11:23:28 AM, Carlos Najarro

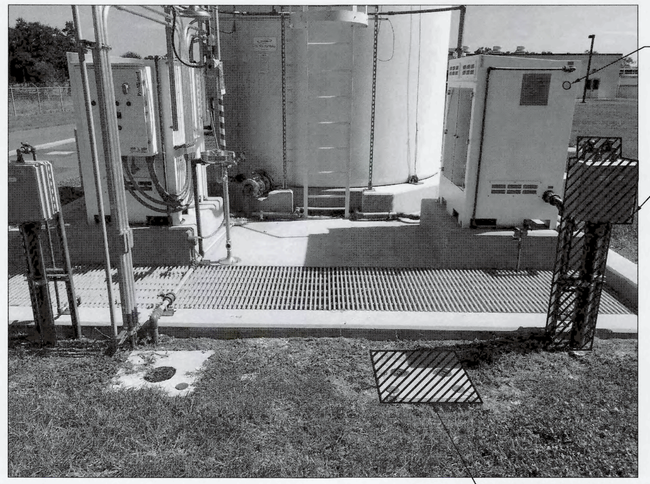

LAS SYTEM ELEVATON

NOT TO SCALE

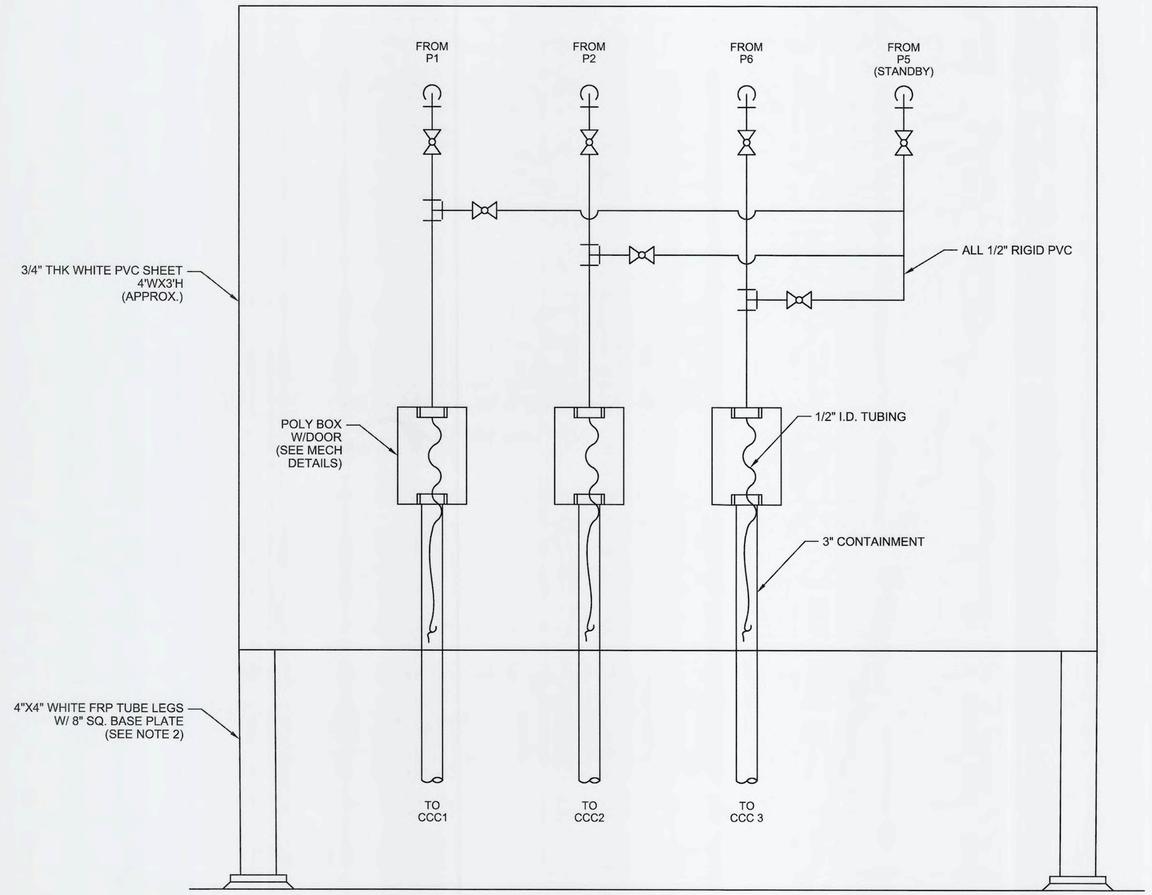

LAS DISCHARGE VALVE PANEL

NOT TO SCALE

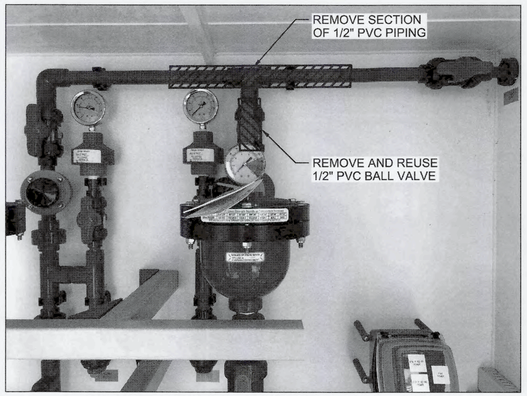

SKID PIPING DEMO

NOT TO SCALE

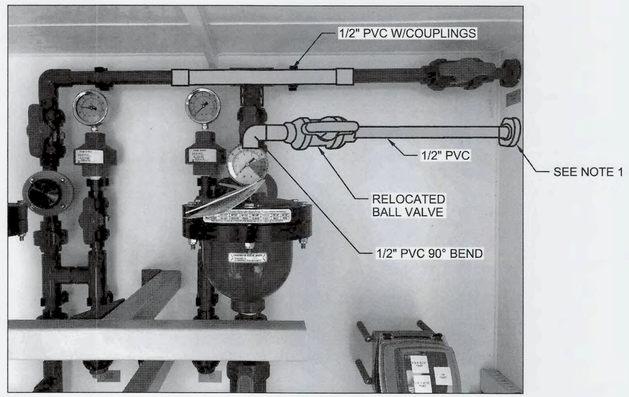

SKID PIPING NEW

NOT TO SCALE

NOTES:

1. CORE SKID ENCLOSURE AND PROVIDE 1/2" PVC/VITON NPT BULKHEAD TO MATCH EXISTING PENETRATION.
2. LEG HEIGHT SHALL BE THE FULL PVC SHEET HEIGHT. AFFIX PVC SHEET TO FRP LEGS WITH 316L SS HARDWARE.

REV.NO.	DESCRIPTIONS	DATE
	REVISIONS	

SEAL: ANTHONY L. PEVEC, LICENSE No.66706, STATE OF FLORIDA, PROFESSIONAL ENGINEER — ANTHONY L. PEVEC, P.E. No. 66706

SEAL

McKIM&CREED
1365 Hamlet Avenue
Clearwater, Florida 33756
Phone: (727)442-7196, Fax: (727)461-3827
CA LIC No. 29588
www.mckimcreed.com

Manatee County FLORIDA

SWWRF
CCC REHAB AND
RECHARGE WELL PS PROJECT

LIQUID AMMONIUM SULFATE (LAS)
FEED SYSTEM MODIFICATION DETAILS

DATE:	SEPTEMBER, 2019
MCE PROJ. #	1024-0171
DRAWN	CN
DESIGNED	TP
CHECKED	JV
PROJ. MGR.	TP

SCALE
HORIZONTAL: NA
VERTICAL: NA

DRAWING NUMBER
M-10

STATUS: ISSUED FOR BID
REVISION

S:\1024\0171\90-Drawings\MECHANICAL\M-10_1024017T.dwg, 9/10/2019 3:46:36 PM, Carlos Nojiero

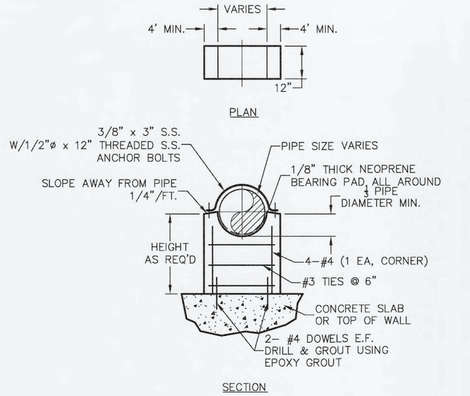

PIPE SUPPORT TYPE 1

NOT TO SCALE

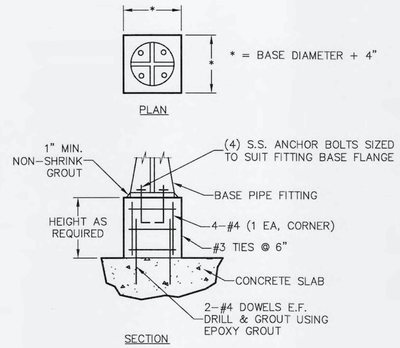

PIPE SUPPORT TYPE 2

NOT TO SCALE

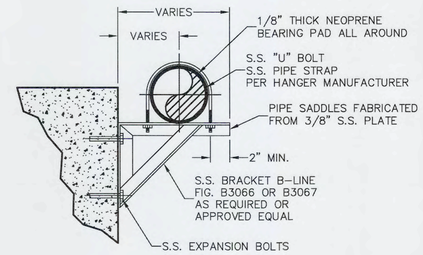

PIPE SUPPORT TYPE 3

NOT TO SCALE

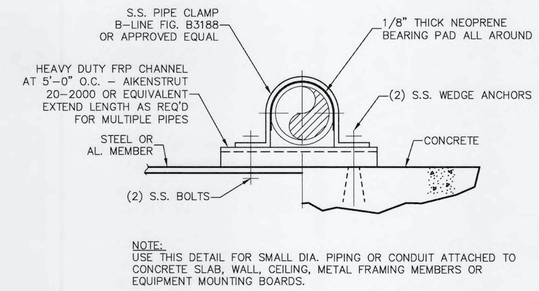

NOTE:
USE THIS DETAIL FOR SMALL DIA. PIPING OR CONDUIT ATTACHED TO CONCRETE SLAB, WALL, CEILING, METAL FRAMING MEMBERS OR EQUIPMENT MOUNTING BOARDS.

PIPE SUPPORT TYPE 5

NOT TO SCALE

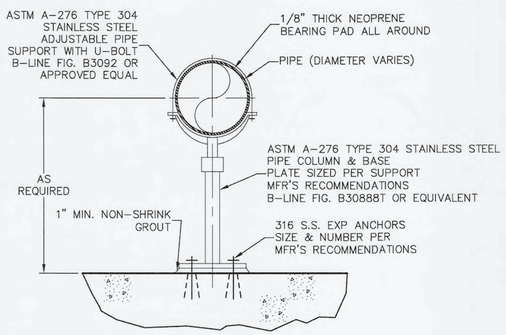

PIPE SUPPORT TYPE 7

NOT TO SCALE

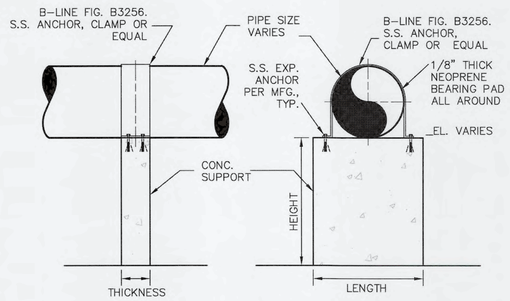

PIPE SUPPORT TYPE 13

NOT TO SCALE

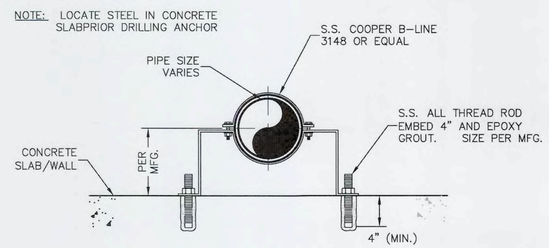

PIPE SUPPORT TYPE 14

NOT TO SCALE

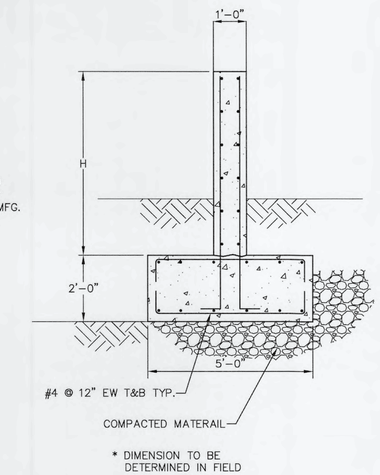

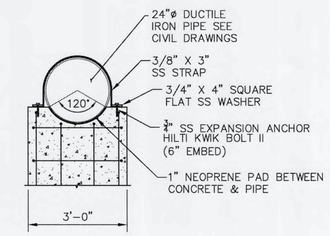

SECTION

PIPE SUPPORT TYPE 8

NOT TO SCALE

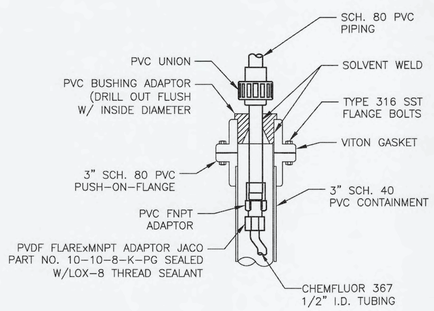

CHEMICAL PIPE/TUBING TRANSITION DETAIL

NOT TO SCALE

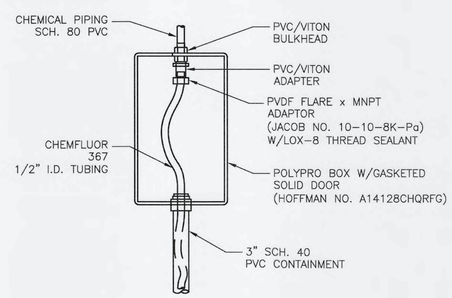

CHEMICAL PIPE/TUBING TRANSITION BOX DETAIL

NOT TO SCALE

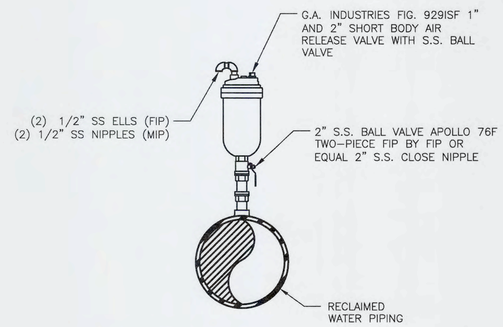

STANDARD AIR RELEASE VALVE ASSEMBLY DETAIL

NOT TO SCALE

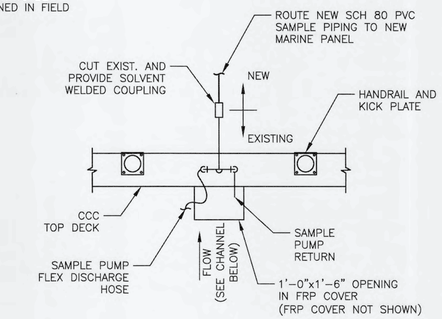

CCC SAMPLE PUMP PIPING DETAIL

NOT TO SCALE

REV.NO.	DESCRIPTIONS	DATE

REVISIONS

ANTHONY L. PEVEC, P.E.
No. 66706

SEAL

McKIM&CREED
1365 Hamlet Avenue
Clearwater, Florida 33756
Phone: (727)442-7196, Fax: (727)461-3827
CA LIC No. 29588
www.mckimcreed.com

Manatee County FLORIDA

SWWRF
CCC REHAB AND
RECHARGE WELL PS PROJECT

MECHANICAL DETAILS

DATE:	SEPTEMBER, 2019
MCE PROJ. #	1024-0171
DRAWN	CN
DESIGNED	TP
CHECKED	JV
PROJ. MGR.	TP

SCALE
HORIZONTAL: NA
VERTICAL: NA

DRAWING NUMBER
M-11

STATUS: ISSUED FOR BID
REVISION

S:\1024\0171\30-Drawings\MECHANICAL\M-11_1024017I.dwg, 9/16/2019 3:46:44 PM, Carlos Najarro

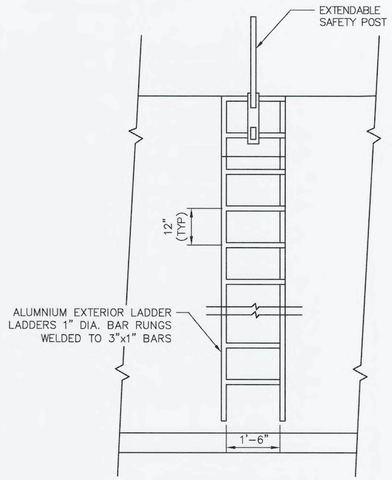

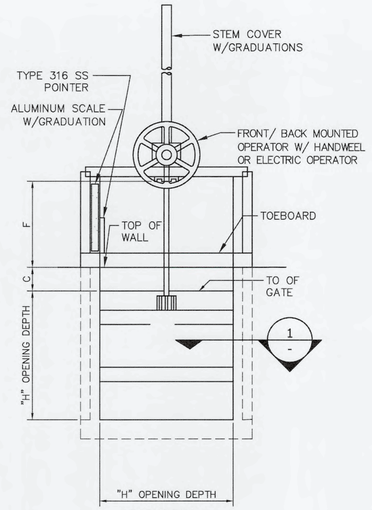

ELEVATION
INSIDE CHANNEL TYPE

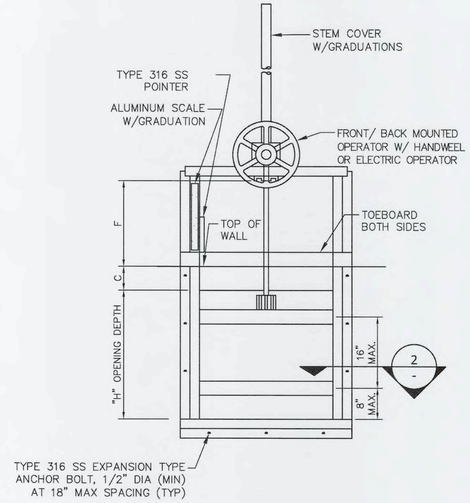

ELEVATION
FACE MOUNTED TYPE

SLIDE GATE DETAIL A / NTS

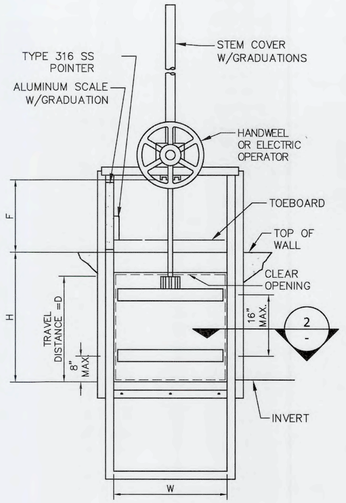

ELEVATION
FACE MOUNTED TYPE
WEIR GATE

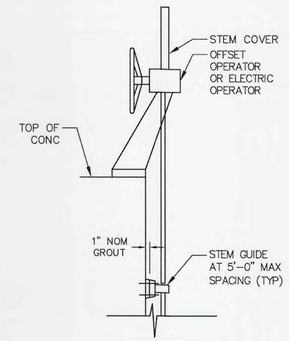

OFFSET OPERATOR

DETAIL B / NTS

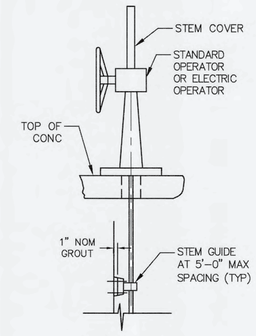

OVERHUNG OPERATOR

DETAIL C / NTS

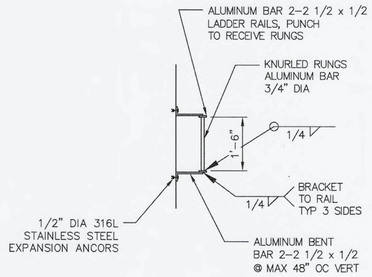

ACCESS LADDER DETAIL
NTS

SLEEVE SCHEDULE				
CARRIER PIPE			STEEL SLEEVE INSIDE DIAMETER (INCHES)	CORE DRILLED HOLE INSIDE DIAMETER (INCHES)
NOMINAL DIAMETER INCHES	MATERIAL	OUTSIDE DIAMETER INCHES		
1/2	SCH. 80 PVC	0.84	2.067	2
3/4	SCH. 80 PVC	1.05	2.067	3.0
1	SCH. 80 PVC	1.315	2.469	2.5
1 1/2	SCH. 80 PVC	1.90	4.026	4
2	SCH. 80 PVC	2.38	4.026	4
3	SCH. 80 PVC	3.50	5.047	5
4	SCH. 80 PVC	4.5	6.065	6
6	D.I.	9.60	10.02	10
8	D.I.	9.05	12.0	12
10	D.I.	11.10	13.25	14
12	D.I.	13.20	15.25	16
16	D.I.	17.40	19.25	20
18	D.I.	19.50	23.25	24
24	D.I.	25.80	29.25	30
36	D.I.	38.30	43.25	43
42	D.I.	44.50	47.25	48

NOTES:
1. INSTALL SEALS FROM DRY SIDE OF PENETRATION. WET SIDE FILLED WITH WATERPROOF NON-SHRINK GROUT.

2. LINK SEAL SHALL HAVE EPDM SEAL ELEMENTS REINFORCED NYLON POLYMER PRESSURE PLATES AND 316 SS BOLTS AND NUTS AS MANUFACTURED BY PIPELINE SEAL AND INSULATOR, INC. (PSI).

LINK SEAL WALL PENETRATION
NOT TO SCALE

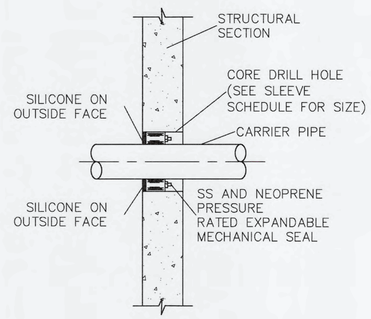

TYPE 1

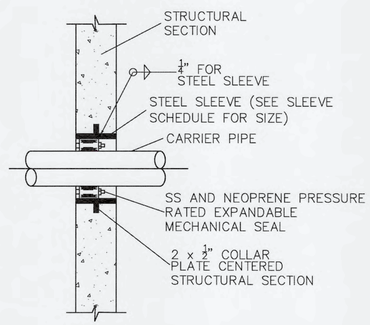

TYPE 2

* OPENING WIDTH & DEPTH

SLIDE GATE SCHEDULE												
GATE NO.	LOCATION	MAT'L.	MOUNT	DRIVE	STEM	SEATING HEAD (FT)	UNSEATING HEAD (FT)	DIMENSION				REMARKS
								* W	* H	F	D	
1,2,3	CHLORINE CONTACT CHAMBER	RESIN	FACE	HNDWHL	NR	---	10'-0"	5'-6"	6'-0"	5'-0"	---	TYP OF 3
1-8	ANOXIC BASIN	RESIN	FACE	HNDWHL	NR	5'-0"	---	4'-0"	4'-6"	4'-0"	---	TYP OF 8

NOTES:

1. HANDWHEELS SHALL BE 18" MIN DIA. FOR HANDWHEEL POSITION, SEE MECHANICAL DRAWINGS.

2. WEIR SLIDE GATE TYPE SHALL ALSO BE ABLE TO SERVE AS SHUT-OFF GATE. A RESILIENT P-SEAL PER SPECIFICATIONS SHALL BE PLACE ALONG THE INVERT OF THE OPENING AND UP BOTH SIDES SO THAT THE GATE WILL BE TIGHT IN THE FULLY RAISED POSITION.

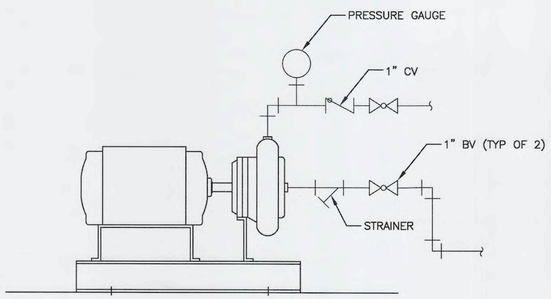

SAMPLE PUMP DETAIL A / M02
NTS

SLIDE GATE
NOT TO SCALE

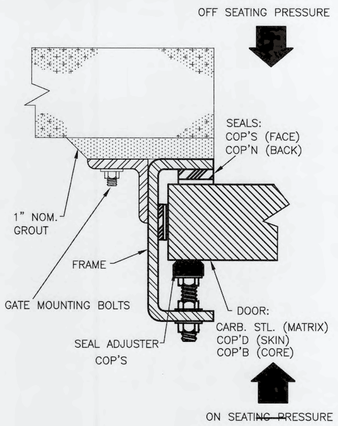

SECTION 1 / NTS

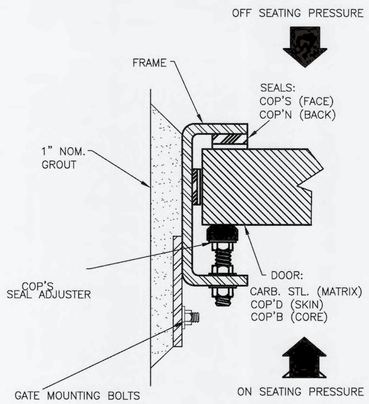

SECTION 2 / NTS

REV.NO.	DESCRIPTIONS	DATE
	REVISIONS	

ANTHONY L. FEVEC, LICENSE No.66706, STATE OF FLORIDA, PROFESSIONAL ENGINEER — SEAL
ANTHONY L. FEVEC, P.E. No. 66706

SEAL

McKIM&CREED
1365 Hamlet Avenue
Clearwater, Florida 33756
Phone: (727)442-7196, Fax: (727)461-3827
CA LIC No. 29588
www.mckimcreed.com

Manatee County FLORIDA

SWWRF
CCC REHAB AND
RECHARGE WELL PS PROJECT

MECHANICAL DETAILS

DATE:	SEPTEMBER, 2019
MCE PROJ. #	1024-0171
DRAWN	CN
DESIGNED	TP
CHECKED	JV
PROJ. MGR.	TP

SCALE: HORIZONTAL: NA; VERTICAL: NA

DRAWING NUMBER: M-12

STATUS: ISSUED FOR BID
REVISION

S:\1024\0171\30-Drawings\MECHANICAL\M-12_1024017T.dwg, 9/16/2019 3:46:46 PM, Carlos Nojiro

POWER DISTRIBUTION SYSTEM

52 / 1200 — MEDIUM VOLTAGE DRAWOUT POWER CIRCUIT BREAKER NUMBER INDICATES CURRENT RATING

DISCONNECT SWITCH WITH FUSING WHERE NOTED

100 / 30 — (FRAME SIZE) / (TRIP SIZE)
3 POLE THERMAL-MAGNETIC MOLDED CASE CIRCUIT BREAKER

100 / 30 2P — 2 POLE THERMAL-MAGNETIC CIRCUIT BREAKER

S / S / T / EO — 800 / 800 — (FRAME SIZE) / (SENSOR RATING)
(600P) DENOTES PLUG RATING WHEN LESS THAN SENSOR RATING IS REQUIRED
DRAWOUT POWER CIRCUIT BREAKER WITH RMS TYPE SOLID STATE TRIP PROGRAMMER
EO DENOTES ELECTRICALLY OPERATED

7A / MCP — AC COMBINATION FULL VOLTAGE NON-REVERSING STARTER
(CONTINUOUS AMP RATING)
(MOTOR CIRCUIT PROTECTOR)
MAGNETIC BREAKER

MAGNETIC MOTOR STARTER

OVERLOAD RELAY

7A / MCP — F / S — AC COMBINATION FULL VOLTAGE NON-REVERSING TWO SPEED TWO WINDING STARTER

RVSS-B — ELECTRONIC REDUCED VOLTAGE SOLID STATE STARTER -RVSS -B DENOTES WITH FULL SPEED BYPASS

600/5 / 3 — CURRENT TRANSFORMER, RATIO AND QUANTITY DENOTED

POTENTIAL TRANSFORMER

TRANSFORMER- SIZE AS NOTED ON THE THE DRAWINGS

SHIELDED ISOLATION TRANSFORMER

DELTA/WYE TRANSFORMER CONNECTION W/GROUND

LA — LIGHTNING ARRESTOR

CL / 2 — FUSE- VOLTAGE AS REQUIRED AND SIZE NOTED ON THE DRAWINGS. CL DENOTES CURRENT LIMITING TYPE. NUMBER INDICATES QUANTITY WHEN LESS THAN 3.

A / AS — AMMETER - AMMETER SWITCH

V / VS — VOLTMETER - VOLTMETER SWITCH

LIGHTING, APPLIANCE OR INSTRUMENT PANELBOARD

POWER PANELBOARD

CP — CP - CONTROL PANEL

MCC — MOTOR CONTROL CENTER

VFD-B — VARIABLE FREQUENCY DRIVE - VFD -B WHEN INDICATED DENOTES WITH STARTING AND FULL SPEED BYPASS

SELECTOR SWITCH

INDICATING LIGHT

EMERGENCY STOP MAINTAINED CONTACT PUSH BUTTON

F / 60/40 — DISCONNECT SWITCH - 480V 3POLE UNFUSED OR FUSED
F DENOTES FUSING, ONLY WHERE INDICATED
FIRST NUMBER DENOTES SWITCH AMP RATING
SECOND NUMBER DENOTES FUSE SIZE WHEN PROVIDED.

J OR J — JUNCTION BOX; SIZE AS REQUIRED BY N.E.C.

T OR T — TERMINAL BOX; SIZE AS REQUIRED BY N.E.C. AND TO ACCOMMODATE ALL TERMINATIONS ON TERMINAL BLOCKS. TERMINATIONS TO INCLUDE SPARE WIRING.

PB OR PB — PULL BOX; SIZE AS REQUIRED BY N.E.C.

M / RV — MOTOR STARTER/CONTROLLER (NON-COMBINATION - COMBINATION - MANUAL)
RV DENOTES REDUCED VOLTAGE

M 5 — ELECTRIC MOTOR (NUMBER INDICATES HORSEPOWER).

5 — ELECTRIC NON-MOTOR LOAD (NUMBER INDICATES KVA).

MV — MOTORIZED VALVE WITH CONTROLLER BY VENDOR

MOV OR MV — MOTORIZED VALVE

ZI — ZONE INTERLOCK

ZI — METER FUNCTIONS

ZSC — LIMIT SWITCH CLOSED

PIT — PRESSURE TRANSMITTER (I DENOTES INDICATING TYPE, AND PE DENOTES PRESSURE ELEMENT)

LIT — LEVEL TRANSMITTER (LE DENOTES LEVEL ELEMENT)

FIT — FLOW TRANSMITTER (FE DENOTES FLOW ELEMENT)

TS — TEMPERATURE SWITCH (TSH DENOTES TEMPERATURE SWITCH HIGH AND TSL DENOTES TEMPERATURE SWITCH LOW)

LS — LEVEL SWITCH (LSH DENOTES LEVEL SWITCH HIGH AND LSL DENOTES LEVEL SWITCH LOW. LE DENOTES LEVEL ELEMENT)

ZC — STROKE POSITIONER

LIGHTING SYSTEM

LP1-3 / a — LED LIGHTING FIXTURE - SURFACE OR PENDANT MOUNTED. FIRST NUMERAL DENOTES LIGHTING PANEL (LP1), SECOND NUMBER DENOTES BRANCH CIRCUIT NUMBER. LOWER CASE LETTER DENOTES SWITCHED CIRCUIT.

EM — LED LIGHTING FIXTURE WITH BATTERY PACK SURFACE OR PENDANT.

PENDANT OR CEILING MOUNTED LIGHTING FIXTURE.

WALL MOUNTED LIGHTING FIXTURE.

POLE OR STANCHION MOUNTED LIGHTING FIXTURE.

TWO (2) POLE OR STANCHION MOUNTED LIGHTING FIXTURES

GF — POLE MOUNTED FIXTURE WITH GF RECEPTACLE

EXIT SIGN WALL MOUNTED (SINGLE FACE WITH INDICATING ARROWS) WITH BATTERY PACK ARROW INDICATES DIRECTION OF EXIT DOOR

D / 150 / 10'-0" AFF — FIXTURE DESIGNATION SYMBOL. SEE LIGHTING FIXTURE SCHEDULE FOR DESCRIPTION AND TYPE. ALL FIXTURES SHOWN IN A ROOM WITH THIS SYMBOL SHALL BE OF TYPE INDICATED BY LETTER; NUMBER IN SYMBOL INDICATES LAMP WATTAGE AND NUMBER OF LAMPS WHERE MORE THAN ONE (UNLESS OTHERWISE NOTED). NUMBER BELOW SYMBOL INDICATES MOUNTING HEIGHT ABOVE FINISHED FLOOR OR AS NOTED.

I-2 / GF/SS — DUPLEX CONVENIENCE RECEPTACLE, 2 POLE, 3 WIRE, 120 VOLTS A.C. 20 AMP RECEPTACLE DESIGNATIONS, FIRST NUMBER DENOTES PANEL, SECOND NUMBER DENOTES CIRCUIT NUMBER. GF-DENOTES GROUND FAULT TYPE. SS-DENOTES SURGE SUPPRESSION TYPE WP-DENOTES WEATHERPROOF ENCLOSURE

S^a — SINGLE POLE SWITCH - LOWER CASE LETTER DENOTES SWITCHING.

S_2 — TWO POLE SWITCH

S_3 — THREE-WAY SWITCH

S_4 — FOUR-WAY SWITCH

LP1-2 — BRANCH CIRCUIT HOME RUN TO PANELBOARD LETTERS AND NUMERALS INDICATE PANEL AND CIRCUIT NUMBER. AS A MINIMUM, ALL WIRING SHALL BE 3#12 AWG IN 3/4" CONDUIT. #10 AWG WIRE SHALL BE USED FOR RUNS BETWEEN PANEL AND FIRST LIGHTING FIXTURE OR RECEPTACLE EXCEEDING 50 FEET, UNLESS OTHERWISE NOTED ON DRAWING.

J / LP1-2 / 10 — LETTERS AND NUMBERS INDICATE PANEL AND CIRCUIT NUMBER (LP1-2). CROSS LINES INDICATE NUMBER OF CONDUCTORS. HALF HASH MARKS INDICATES NEUTRAL. NUMBER (10) DENOTES WIRE SIZE WHEN NOT #12 AWG. CONTINUE CONDUIT AND WIRE RUN FROM BOX TO DEVICE IN ROOM OR AREA AS NOTED BY BRANCH CIRCUIT NUMBER. #10 AWG WIRING SHALL BE USED FOR RUNS BETWEEN PANEL AND FIRST LIGHTING FIXTURE OR RECEPTACLE EXCEEDING 50 FEET, UNLESS OTHERWISE NOTED ON DRAWING.

INDICATES GROUND CONDUCTOR

C12 — INDICATES HOMERUN AND CONDUIT TAG

LIGHTNING AIR TERMINAL

CONTROL DIAGRAM

GROUND TEST POINT

GROUND ROD

GROUND GRID CABLE CONNECTION

GROUND

DEVICE LOCATED IN FIELD AT OR NEAR MOTOR

DEVICE LOCATED IN CONTROL PANEL

GRN / PT — INDICATING LIGHT, PT-DENOTES PUSH TO TEST TYPE, ABBREVIATION INDICATES LENS COLOR

SWITCH - TOGGLE OPEN

MAINTAINED CONTACT PUSH BUTTON NORMALLY OPEN

MOMENTARY CONTACT PUSH BUTTON NORMALLY OPEN

MAINTAINED CONTACT PUSH BUTTON NORMALLY CLOSED

MOMENTARY CONTACT PUSH BUTTON NORMALLY CLOSED

SWITCH - TEMPERATURE NORMALLY CLOSED. OPENS ON RISING TEMPERATURE

SWITCH - TEMPERATURE NORMALLY OPEN. CLOSES ON RISING TEMPERATURE

SWITCH - LIMIT NORMALLY OPEN

CRI — NORMALLY OPEN CONTACT, NUMBER INDICATES RELAY.

NORMALLY CLOSED CONTACT

OL — THERMALLY ACTUATED MOTOR OVERLOAD RELAY, LATCHES CLOSED ON OVERLOAD

OL — THERMALLY ACTUATED MOTOR OVERLOAD RELAY, LATCHES OPEN ON OVERLOAD

NOTC — NORMALLY OPENED CONTACT - TIMED CLOSED TIME DELAY AFTER COIL ENERGIZED

NCTO — NORMALLY CLOSED CONTACT- TIMED OPEN TIME DELAY AFTER COIL ENERGIZED

M — MOTOR STARTER CONTACTOR COIL
COIL DESIGNATION:
M-COIL

CR — CONTROL RELAY COIL DESIGNATION:
CR-CONTROL RELAY
MX-AUXILIARY RELAY
TR-TIMING RELAY
AR-ALARM RELAY
RR-READY RELAY

H A (X,O) / (O,X) — SELECTOR SWITCH, 2 POSITION MAINTAINED CONTACT
(O,X) DENOTES CONTACT BLOCK CONFIGURATION X INDICATES CONTACT CLOSED, O DENOTES CONTACT OPEN.

H O A — SELECTOR SWITCH, 3 POSITION MAINTAINED CONTACT

OR — ELECTRIC SPACE HEATER ELEMENT

ETM — ELAPSED TIME METER

MANUAL SPEED CONTROL

FIRE ALARM SYSTEM

FACP — FIRE ALARM CONTROL PANEL

H — HORN

F — MANUAL PULL STATION

SD — SMOKE DETECTOR, MULTISENSOR

GENERAL NOTES:

1. THE SYMBOLS AND ABBREVIATIONS LIST ON THIS SHEET IS A COMPREHENSIVE STANDARD GUIDE INTENDED FOR GENERAL USE ON ALL PROJECTS. THEREFORE NOT ALL THE SYMBOLS AND ABBREVIATIONS CONTAINED IN THIS LIST ARE NECESSARILY USED ON THIS PARTICULAR PROJECT AND SHOULD BE USED FOR CLARIFICATION ONLY.
2. THE CONTRACTOR SHALL READ AND UNDERSTAND THE ENTIRE SET OF CONSTRUCTION DOCUMENTS. THIS INCLUDES BUT IS NOT LIMITED TO THE PLANS AND SPECIFICATIONS FOR ALL DISCIPLINES. THIS WILL ENSURE THAT HE/SHE UNDERSTANDS THE FULL SCOPE OF WORK AND IS ABLE TO CONVEY THE REQUIRED MATERIALS AND METHODS OF INSTALLATION TO THE HIS ESTIMATORS, SUPPLIERS AND INSTALLERS.
3. THE CONTRACTOR SHALL VISIT THE SITE AND FAMILIARIZE HIMSELF WITH THE EXISTING CONDITIONS.
4. PROVIDE MEANS TO FURNISH AND INSTALL.
5. COORDINATE ANY AND ALL WORK WITH OTHER TRADES PRIOR TO INSTALLATION IN ORDER TO AVOID CONFLICTS DURING CONSTRUCTION.
6. THESE DRAWINGS ARE DIAGRAMMATIC IN NATURE. DO NOT SCALE FROM THESE DRAWINGS.
7. WHERE JOB CONDITIONS REQUIRE CHANGES FROM THE CONTRACT DOCUMENTS THAT DO NOT CHANGE THE SCOPE OF INSTALLATION OR NATURE OF THE WORK REQUIRED, THE CONTRACTOR SHALL MAKE SUCH CHANGES WITHOUT ANY ADDITIONAL COST TO THE OWNER. NO OTHER CHANGES MAY BE MADE WITHOUT WRITTEN CONSENT FROM THE ENGINEER AND OWNER.
8. ALL WORK SHALL BE DONE IN ACCORDANCE WITH THE REQUIREMENTS OF THE ENFORCED EDITION OF THE NATIONAL ELECTRIC CODE, NATIONAL ELECTRIC SAFETY CODE, LIFE SAFETY CODE, FLORIDA BUILDING CODE AND ALL LOCAL AND STATE CODES AND REGULATIONS. THE CONTRACTOR SHALL OBTAIN AND PAY FOR ALL PERMITS AND INSPECTIONS REQUIRED BY THE AUTHORITY HAVING JURISDICTION.
9. MOUNTING HEIGHTS INDICATED ARE TO THE CENTER OF THE DEVICE U.O.N.
10. ALL CIRCUIT BREAKERS SHALL BE 100% RATED.
11. ALL CABLE AND POWER CIRCUIT TERMINATIONS SHALL BE 75°C RATED.

LINE WEIGHT DESIGNATIONS

- EXISTING ABOVE GROUND
- EXISTING UNDER GROUND
- NEW ABOVE GROUND
- NEW UNDER GROUND
- FUTURE
- DEMO

ABBREVIATIONS

A	AMPERES
AC	ALTERNATING CURRENT
AMB	AMBER
BKR	BREAKER
BLU	BLUE
C, CND	CONDUIT
CA	CONDUIT, ANALOG
CB	CIRCUIT BREAKER
CBV	CABLE BY VENDOR, INSTALLED BY CONTRACTOR
CLG	CEILING
CTRL	CONTROL
CP	CONTROL PANEL
CPB	CONTROL PULL BOX (-X DISCRETE, -XA ANALOG)
CS	CONTROL STATION
DC	DIRECT CURRENT
DWG	DRAWING
EC	EMPTY CONDUIT
EHH	ELECTRICAL HANDHOLE
EL, ELEV	ELEVATION
EMH	ELECTRICAL MANHOLE
EMT	ELECTRICAL METALLIC TUBING
EXIST	EXISTING
FDR	FEEDER
FIXT	FIXTURE
FS	FLOW SWITCH
FT	FEET OR FOOT
FUT	FUTURE
FVNR	FULL VOLTAGE NON-REVERSING
GALV	GALVANIZED
GEC	GROUNDING ELECTRODE CONDUCTOR
G, GND	GROUND
GF, GFI	GROUND FAULT INTERRUPTER
GFCI	GROUND FAULT CIRCUIT INTERRUPTER
GRN	GREEN
HH	HAND HOLE
HOA	HAND/OFF/AUTO
HOR	HAND/OFF/REMOTE
HTR	HEATER
IN, "	INCHES
JB	JUNCTION BOX
KAIC	THOUSAND AMPERES INTERRUPTING CURRENT
KCMIL	THOUSAND CIRCULAR MILS
KVA	THOUSAND VOLT AMPERES
KW	KILOWATTS
LA	LIGHTNING ARRESTOR
LCP	LOCAL CONTROL PANEL
LS	LEVEL SWITCH
LTG	LIGHTING
LV	LOW VOLTAGE
mA	MILLIAMPERE
M	MOTOR
MCC	MOTOR CONTROL CENTER
MDP	MAIN DISTRIBUTION PANEL
MFR	MANUFACTURER
MIN	MINIMUM
MTG	MOUNTING
MV	MEDIUM VOLTAGE
N/A	NOT APPLICABLE
NC	NORMALLY CLOSED
NO	NORMALLY OPEN
NEC	NATIONAL ELECTRIC CODE
NTS	NOT TO SCALE
OL	OVERLOAD RELAY
PB	PULL BOX
PLC	PROGRAMMABLE LOGIC CONTROLLER
PMS	PAD MOUNTED SWITCH, 5KV TYP.
PNL	PANEL
PRI	PRIMARY
PS	PRESSURE SWITCH
PT	POTENTIAL TRANSFORMER
PVC	POLYVINYL CHLORIDE
RECP	RECEPTACLE
RGS	RIGID GALVANIZED STEEL
REQ'D	REQUIRED
SEC	SECONDARY
SP	SPARE
SPD	SURGE PROTECTION DEVICE
SS, SST	STAINLESS STEEL
SWBD	SWITCHBOARD
SWGR	SWITCHGEAR
TEMP	TEMPERATURE
TEW	THERMOCOUPLE EXTENSION WIRE
TS	TEMPERATURE SWITCH
TSP	TWISTED SHIELDED PAIR
TYP	TYPICAL
UG	UNDERGROUND
UON	UNLESS OTHERWISE NOTED
UPS	UNINTERRUPTIBLE POWER SUPPLY
V	VOLTS
VAC	VOLTS ALTERNATING CURRENT
VFD	VARIABLE FREQUENCY DRIVE
WHI	WHITE
WP	WEATHERPROOF
XFMR	TRANSFORMER
XP	EXPLOSION PROOF

REV.NO.	DESCRIPTIONS	DATE
	REVISIONS	

AUBREY ARMAND HAUDRICOURT LICENSE No. 66861 STATE OF FLORIDA PROFESSIONAL ENGINEER SEAL
AUBREY A. HAUDRICOURT, P.E. No. 66861

SEAL

McKIM&CREED
1365 Hamlet Avenue
Clearwater, Florida 33756
Phone: (727)442-7196, Fax: (727)461-3827
CA LIC No. 29588
www.mckimcreed.com

Manatee County FLORIDA

SWWRF
CCC REHAB AND
RECHARGE WELL PS PROJECT

ELECTRICAL NOTES, ABBREVIATIONS AND LEGEND

DATE:	SEPTEMBER, 2019
MCE PROJ. #	1024-0171
DRAWN	LCS
DESIGNED	AAH
CHECKED	JAG/ JV
PROJ. MGR.	TP

SCALE: HORIZONTAL: NA VERTICAL: NA

DRAWING NUMBER: E-01

STATUS: ISSUED FOR BID

REVISION

S:\1024 - Manatee Co\0171\80-Drawings\ELECTRICAL\E-01-1024017I - INDEX.dwg, 9/16/2019 3:06:55 PM, Aubrey Haudricourt

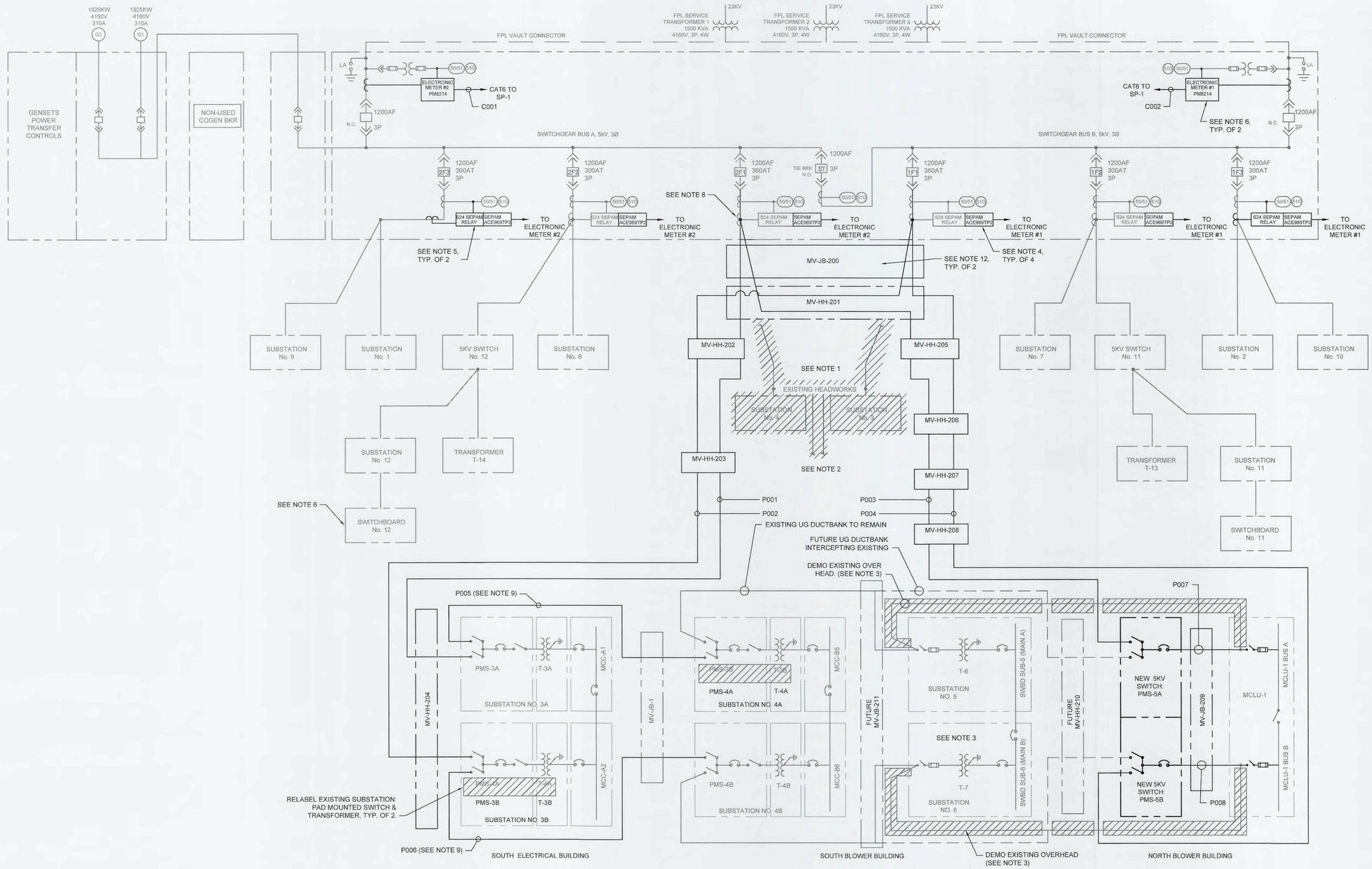

NOTES:

1. REMOVE EXISTING WIRE FROM BREAKERS 1F1 AND 2F1 TO OLD HEADWORKS. CAP & SEAL UNDERGROUND CONDUIT TO MEDIUM VOLTAGE ENCLOSURE. USE WATERPROOF SEALANT
2. REMOVE EXISTING WIRE FROM HEADWORKS TO EXISTING MEDIUM VOLTAGE (MV) SWITCHES 3A AND 4A. CAP AND SEAL UNDERGROUND CONDUIT INSIDE OF ENCLOSURE. USE WATERPROOF SEALANT.
3. OVERHEAD CABLE TRAY BETWEEN NORTH AND SOUTH BLOWER BUILDINGS TO REMAIN. REMOVE MEDIUM VOLTAGE CABLES BETWEEN SUBSTATIONS 5&6 AND NORTH BLOWER BUILDING. SUBSTATIONS TO REMAIN ENERGIZED. EXISTING 480V FEED TO MCC-1, 120V POWER AND COMMUNICATION CIRCUITS INSIDE CABLE TRAY ARE TO REMAIN.
4. INSTALL FOUR (4) NEW SEPAM COMMUNICATIONS CARDS (ACE969TP-2) ON EXISTING SEPAM RELAYS FOR MODBUS COMMUNICATION TO NEW MAIN POWER METERS. PROVIDE AND INSTALL COMMUNICATION CABLE BETWEEN ALL METERS. COORDINATE REQUIREMENTS W/ SWGR MFR.
5. INSTALL TWO (2) NEW SEPAM RELAYS (S24) AND COMMUNICATIONS CARDS (ACE969TP-2) FOR MODBUS COMMUNICATION TO NEW MAIN POWER METERS. PROVIDE AND INSTALL COMMUNICATION CABLE. COORDINATE REQUIREMENTS W/ SWGR MFR.
6. INSTALL TWO (2) NEW MAIN POWER METERS (PM8240), TWO (2) NEW CTS AND (4) NEW SHORTING BLOCKS FOR NEW AND EXISTING CTS. REMOTE DISPLAY FOR POWER METERS SHALL BE MOUNTED ON CUBICLE DOORS. COMMUNICATION TO SCADA THRU SP-1 SHALL BE MODBUS TCP/IP. PROVIDE 1" CONDUIT AND COMUNICATION CABLE (APPROX. 50' OF CONDUIT)
7. SEE SHEET E-04 FOR MV CONDUIT & WIRE SCHEDULE.
8. NEW MV FEEDERS SHALL BE CONNECTED USING EXISTING AND NEW LUGS. PROVIDE ADDITIONAL LUGS FOR CONNECTION AS REQUIRED. ROUTE CONDUIT FOR TOP ENTRY OF GEAR. PROVIDE ALL SUPPORTS AS NECESSARY
9. REMOVE EXISTING WIRE, SWAB CLEAN AND PULL NEW WIRE IN EXISTING UG CONDUIT DUCTBANK BETWEEN PMS-3A,3B AND PMS-4A,4B.
10. COORDINATE WITH COUNTY 2 WEEKS PRIOR TO ALL ELECTRICAL SHUTDOWNS. PROVIDE TEMPORARY POWER TO ANY LOADS IDENTIFIED BY THE COUNTY AS UNINTERRUPTIBLE DURING SHUTDOWN.
11. TEST 1F2, 2FT BREAKERS PER COORDINATION AND ARCFLASH STUDY SETTINGS.
12. TERMINATE MEDIUM VOLTAGE CONDUIT SPARE IN JUNCTION BOX. PROVIDE PULL STRINGS BETWEEN JUNCTION BOX AN ALL MANHOLES.

MEDIUM VOLTAGE SINGLE LINE POWER DIAGRAM

SCALE: NTS

REV.NO.	DESCRIPTIONS	DATE
	REVISIONS	

SEAL: AUBREY ARMAND HAUDRICOURT, LICENSE No. 66861, STATE OF FLORIDA, PROFESSIONAL ENGINEER, 9-16-19

AUBREY A. HAUDRICOURT, P.E. No. 66861

SEAL

McKIM&CREED
1365 Hamlet Avenue
Clearwater, Florida 33756
Phone: (727)442-7196, Fax: (727)461-3827
CA LIC No. 29588
www.mckimcreed.com

Manatee County FLORIDA

SWWRF
CCC REHAB AND
RECHARGE WELL PS PROJECT

MEDIUM VOLTAGE SINGLE LINE POWER DIAGRAM

DATE:	SEPTEMBER, 2019
MCE PROJ. #	1024-0171
DRAWN	LLS
DESIGNED	AAH
CHECKED	JAG/JV
PROJ. MGR.	TP

SCALE
HORIZONTAL: NA
VERTICAL: NA

DRAWING NUMBER
E-02

STATUS: ISSUED FOR BID
REVISION

S:\1024 - Manatee Co\0171\90-Drawings\ELECTRICAL\E-02-1024017I - MV SINGLE LINE.dwg, 9/16/2019 3:07:02 PM, Aubrey Haudricourt

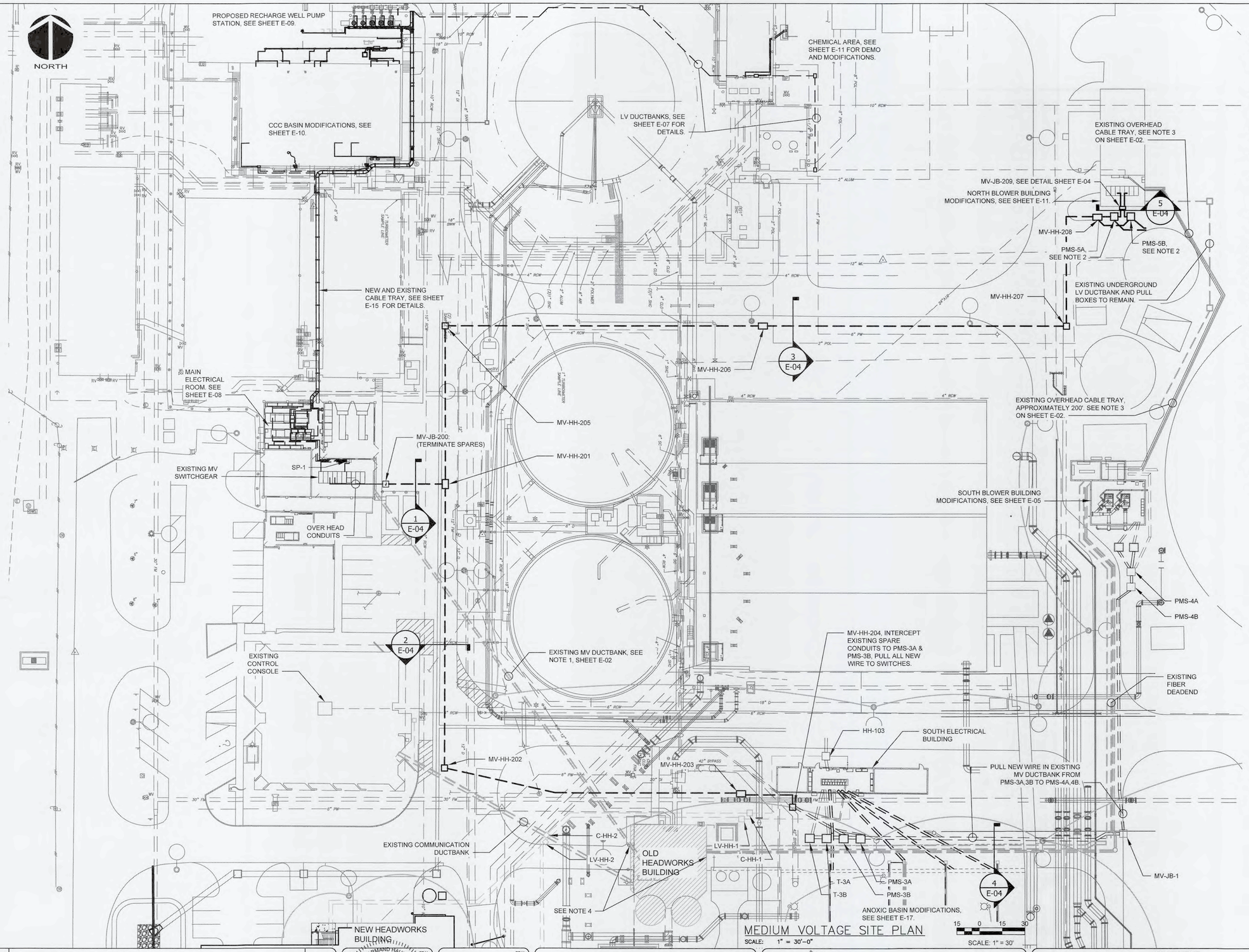

MEDIUM VOLTAGE SITE PLAN

SCALE: 1" = 30'-0"

NOTES:

1. LOCATION OF PROPOSED DUCTBANK AND ELECTRICAL MANHOLES ARE APPROXIMATE. CONTRACTOR SHALL PROVIDE SURVEYED LAYOUT DRAWING W/ PROPOSED ROUTE IDENTIFYING POTENTIAL CONFLICT RESOLUTIONS PRIOR TO STARTING ELECTRICAL SITE WORK.
2. INSTALL (2) NEW MIN. 12" LONG, 4" TRADE SIZE CONDUIT STUB-OUTS IN PMS-5A AND PMS-5B FOR FUTURE UNDERGROUND CONDUIT DUCTBANK CONNECTION, AS SHOWN ON SHEET E-02. CAP AND SEAL ALL UNUSED CONDUIT PENETRATIONS.
3. MEDIUM VOLTAGE CONDUITS SHALL ENTER THE NORTH BLOWER BUILDING APPROXIMATELY 9' AFG.
4. CUT AND CAP EXISTING CONDUITS FOR MV FEEDERS BELOW GRADE. REMOVE EXISTING WIRING TO PMS-3A & PMS-4A IN ITS ENTIRETY
5. RE-LABEL EXISTING SUBSTATION MV SWITCHES AND TRANSFORMERS 3B AND 4A AS SHOWN SHEET E-02. MODIFY EXISTING LABELS FOR ALL OTHER EQUIPMENT CONNECTED TO SUBSTATION 3B AND 4A AS REQUIRED TO REFLECT NEW EQUIPMENT DESIGNATIONS.
6. CONTRACTOR TO PROVIDE SHUTDOWN PLAN FOR EACH MAJOR SHUTDOWN 72 HOURS BEFORE SCHEDULED SHUTDOWN. PLAN TO BE REVIEWED AND ACCEPTED BY ENGINEER AND PLANT PERSONNEL.

SHUTDOWNS:
COORDINATE WITH PLANT OPERATIONS TO CLOSE TIE BREAKERS THROUGH-OUT PLANT TO ENERGIZE SWITCHGEAR AND MCC BUS,SCHEDULED AT A TIME THAT PROVIDES THE LEAST IMPACT TO PLANT OPERATIONS. PROVIDE ANY TEMPORARY POWER NEEDED TO KEEP CRITICAL LOADS ENERGIZED THAT ARE IDENTIFIED BY COUNTY STAFF.

1. MAIN SWITCHGEAR: RELAY AND METER MODIFICATIONS:
   1.1. ONE HALF OF MV-SWGR OUTAGE AT A TIME. . ASSIST SCHNEIDER ELECTRIC FOR METERING AND RELAY MODIFICATIONS TO MV-SWGR. SHUTDOWNS SHALL BE
2. NORTH/SOUTH BLOWER "B" BUS (MAX 4 HOURS)
   2.1. DISCONNECT NORTH AND SOUTH ENDS OF FEEDER FROM SUBSTATION 6 TO NORTH BLOWER BUILDING MCLU-1 BUS B MAIN BREAKER. RECONNECT CRITICAL LOADS ON MCC-B2 AND MCC-B4
3. NORTH/SOUTH BLOWER "A" BUS (MAX 4 HOURS)
   3.1. DISCONNECT NORTH AND SOUTH ENDS OF FEEDER FROM SUBSTATION 5 TO NORTH BLOWER BUILDING MCLU-1 BUS A MAIN BREAKER. RECONNECT CRITICAL LOADS ON MCC-1, MCC-B1 AND MCC-B3.
4. CABLE TERMINATIONS (POSSIBLE SERVICE DISRUPTION) (MAX 2 DAYS)
   4.1. TERMINATE CABLE FOR P002 AT PMS-3B.
   4.2. DEMO EXISTING CABLE BETWEEN PMS-3B AND PMS-4B.
5. CABLE TERMINATIONS (POSSIBLE SERVICE DISRUPTION) (MAX 2 DAYS)
   5.1. TERMINATE CABLE FOR P001 AT PMS-3A.
   5.2. DEMO EXISTING CABLE BETWEEN PMS-3A AND PMS-4A.

REV.NO.	DESCRIPTIONS	DATE
	REVISIONS	

SEAL: AUBREY ARMAND HAUDRICOURT, LICENSE No. 66861, STATE OF FLORIDA, PROFESSIONAL ENGINEER, 9-16-19

AUBREY A. HAUDRICOURT, P.E. No. 66861

SEAL

McKIM&CREED
1365 Hamlet Avenue
Clearwater, Florida 33756
Phone: (727)442-7196, Fax: (727)461-3827
CA LIC No. 29588
www.mckimcreed.com

Manatee County FLORIDA

SWWRF CCC REHAB AND RECHARGE WELL PS PROJECT

MEDIUM VOLTAGE SITE PLAN

DATE:	SEPTEMBER, 2019
MCE PROJ. #	1024-0171
DRAWN	LLS
DESIGNED	AAH
CHECKED	JAG/ JV
PROJ. MGR.	TP

SCALE: HORIZONTAL: 1" = 30'-0" VERTICAL: NA

DRAWING NUMBER: E-03

STATUS: ISSUED FOR BID

REVISION

S:\1024 - Manatee Co\0171\30-Drawings\ELECTRICAL\E-03-1024017I - MV SITE PLAN.dwg, 9/16/2019 3:22:14 PM, Aubrey Haudricourt

MEDIUM VOLTAGE CONDUIT SCHEDULE

ID	FROM	TO	SETS	WIRES	WIRE SIZE (MIN)	EQUIPMENT GROUND	CONDUIT SIZE (MIN)	SPARE
	MAIN ELECTRICAL BUILDING							
P001	MV SWGR	PMS-3A	(1)	3 #	350	1/0 G	4.0"C	1
P002	MV SWGR	PMA-3B	(1)	3 #	350	1/0 G	4.0"C	1
P003	MV SWGR	PMS-5A	(1)	3 #	350	1/0 G	4.0"C	2
P004	MV SWGR	PMS-5B	(1)	3 #	350	1/0 G	4.0"C	2
P005	PMS-3A	PMS-4A	(1)	3 #	350	1/0 G	4.0"C	
P006	PMA-3B	PMS-4B	(1)	3 #	350	1/0 G	4.0"C	
P007	PMS-5A	MV-MCC	(1)	1 #	350	1/0 G	4.0"C	1
P008	PMS-5B	MV-MCC	(1)	1 #	350	1/0 G	4.0"C	1
C001	MV SWGR PM 1	SP-1	(1)	1 #		CAT-6, SH	1.0"C	
C002	MV SWGR PM 2	SP-1	(1)	1 #		CAT-6, SH	1.0"C	

LOAD TABLE				624.5	A	FPL MAX	49%
SWGR BUS A				633.2	A	GEN MAX	48%
MAIN ELECTRICAL BUILDING				1200	A	<MCB>	26%
NAME	AREA	MV BRK	DUTY?	LOAD	MAX KVA	CONNECTED KVA	MV AMPS
SUBSTATION 1 & 9	ELEC/MAINT. BLDG	1F3	D	128.8%	667	859	119
SUBSTATION 7, 7A, 11, 13	DEWTR & SW GEN.	1F2	D	72.9%	1167	851	118
PMS 3A, 4A, 5A	SWITCHED LOOP1	1F1	D	78.8%	2135	1682.3	233
CONNECTED LOAD (KVA/FLA)						3392.3	471
RUNNING LOAD (KVA/FLA) @65% DUTY FACTOR						2202	306

LOAD TABLE				624.5	A	FPL MAX	42%
SWGR BUS B				633.2	A	GEN MAX	42%
MAIN ELECTRICAL BUILDING				1200	A	<MCB>	22%
NAME	AREA	MV BKR	DUTY?	LOAD	MAX KVA	CONNECTED KVA	MV AMPS
PMS 3B, 4B, 5B	SWITCHED LOOP 2	2F1	D	76.1%	2135	1624.7	225
SUBSTATION 8, 8A, 12, 14	DEWTR & SW GEN	2F2	D	61.4%	1167	716	99
SUBSTATION 2	ELEC/MAINT. BLDG	2F3	D	87.0%	667	580	80
CONNECTED LOAD (KVA/FLA)						2920.7	405
RUNNING LOAD (KVA/FLA) @65% DUTY FACTOR						1896.2	263

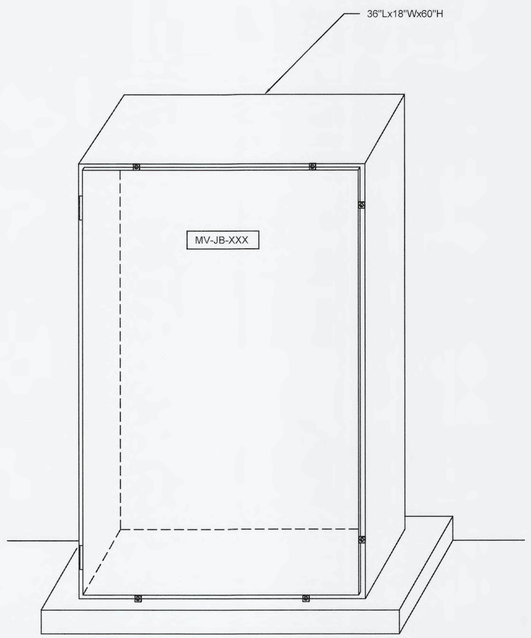

MV-JB-XXX DETAIL

NTS

TYPICAL FOR MV-JB-200 MV-JB-209
(SEE DUCTBANK SECTION 1 AND SECTION 5 THIS SHEET)

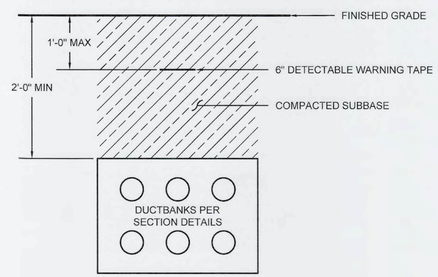

TYPICAL INSTALLATION

MV DUCTBANK DETAIL

NTS

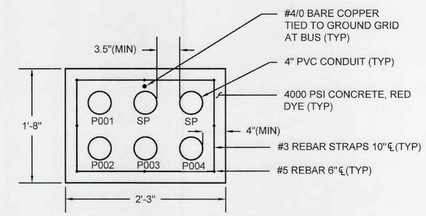

DUCTBANK SECTION 1

MV DUCTBANK DETAIL

NTS

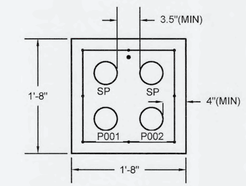

DUCTBANK SECTION 2

MV DUCTBANK DETAIL

NTS

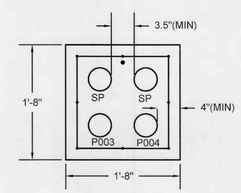

DUCTBANK SECTION 3

MV DUCTBANK DETAIL

NTS

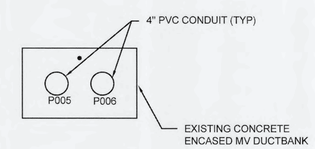

DUCTBANK SECTION 4

MV DUCTBANK DETAIL

NTS

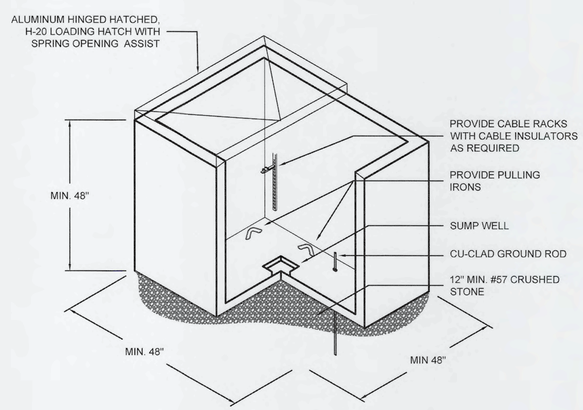

DETAIL NOTES:

1. BOND ALL METALLIC PARTS WITH #2AWG BARE TINNED COPPER.
2. EXOTHERMIC WELD CU-CLAD GROUND ROD TO GROUND CABLE.
3. DIMENSIONS FOR MV-HH-201, MV-HH-203, MV-HH-206 AND MV-HH-208 SHALL BE MINIMUM 4' x 4' x 6'.

MV HANDHOLE DETAIL

NTS

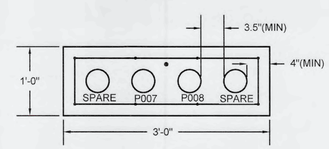

DUCTBANK SECTION 5

MV DUCTBANK DETAIL

NTS

MEDIUM VOLTAGE TABLES AND DETAILS

SCALE: NTS

REV.NO.	DESCRIPTIONS	DATE

REVISIONS

SEAL: AUBREY ARMAND HAUDRICOURT, LICENSE No. 66861, STATE OF FLORIDA, PROFESSIONAL ENGINEER — AUBREY A. HAUDRICOURT, P.E. No. 66861, 9-16-19

SEAL

McKIM&CREED
1365 Hamlet Avenue
Clearwater, Florida 33756
Phone: (727)442-7196, Fax: (727)461-3827
CA LIC No. 29588
www.mckimcreed.com

Manatee County FLORIDA

SWWRF
CCC REHAB AND
RECHARGE WELL PS PROJECT

MEDIUM VOLTAGE TABLES AND DETAILS

DATE:	SEPTEMBER, 2019
MCE PROJ. #	1024-0171
DRAWN	LLS
DESIGNED	AAH
CHECKED	JAG/JV
PROJ. MGR.	TP

SCALE: HORIZONTAL: NA; VERTICAL: NA

DRAWING NUMBER: E-04

STATUS: ISSUED FOR BID

REVISION

S:\1024 - Manatee Co\0171\BID-Drawings\ELECTRICAL\E-04-1024017I - MV DETAILS AND DIAGRAMS.dwg, 9/16/2019 3:07:25 PM, Aubrey Haudricourt

NOTES:

1. DISCONNECT MV FEEDERS BETWEEN SUBSTATIONS 5, 6 AND NORTH BLOWER BUILDING MV MCC. REMOVE EXISTING MV CABLE FROM CABLE TRAY. COORDINATE ALL SHUTDOWNS WITH COUNTY.
2. SEE NOTE 3 ON SHEET E-02 FOR DETAILS.

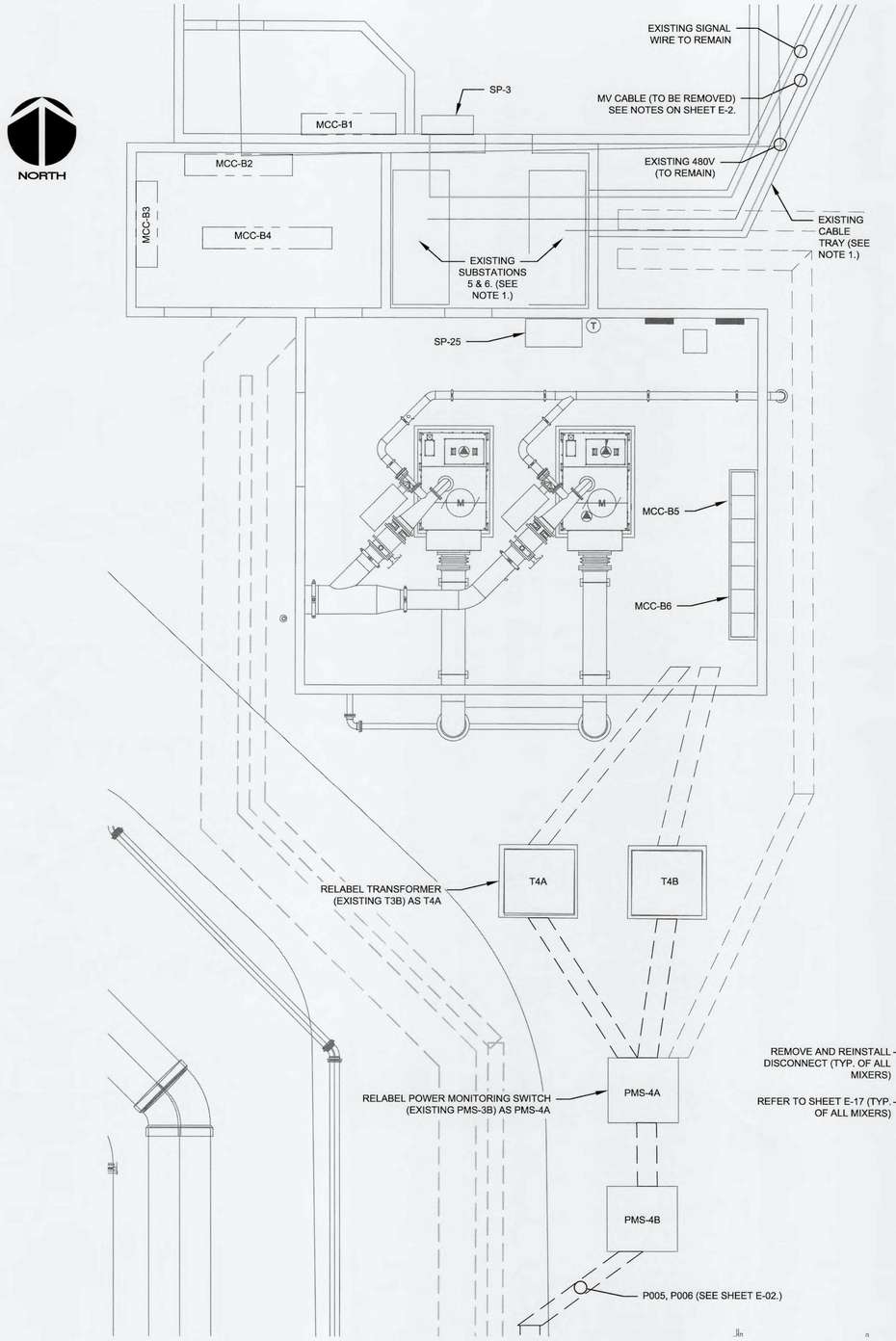

PARTIAL SITE PLAN SOUTH BLOWER BLDG

SCALE: 3/16" = 1'-0"

0 4 12

SCALE: 3/16" = 1'-0"

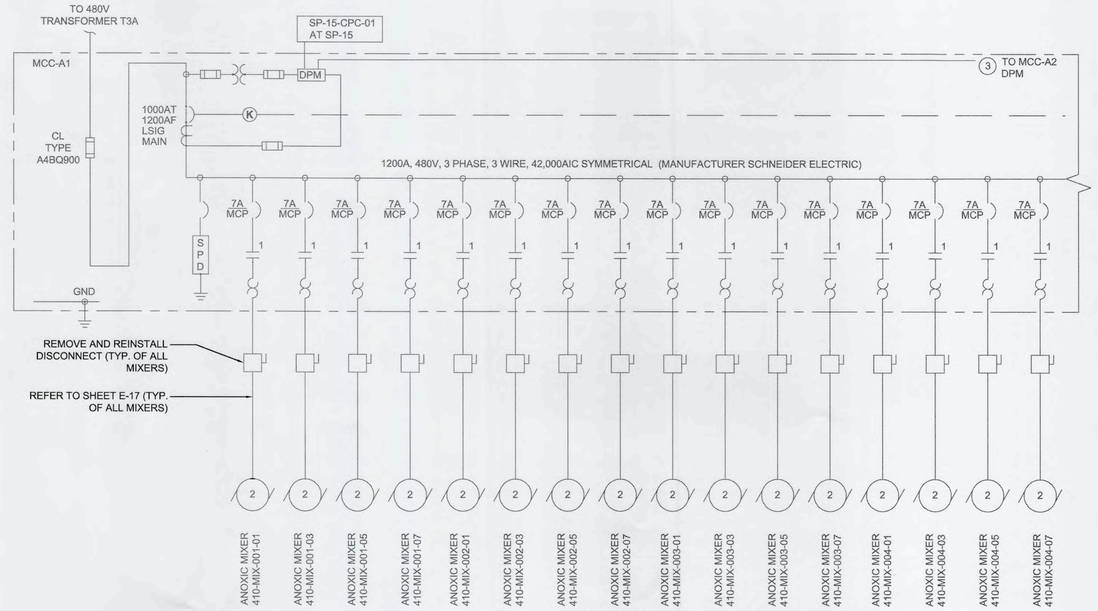

ANOXIC MCC-A1 SINGLE LINE

SCALE: NTS

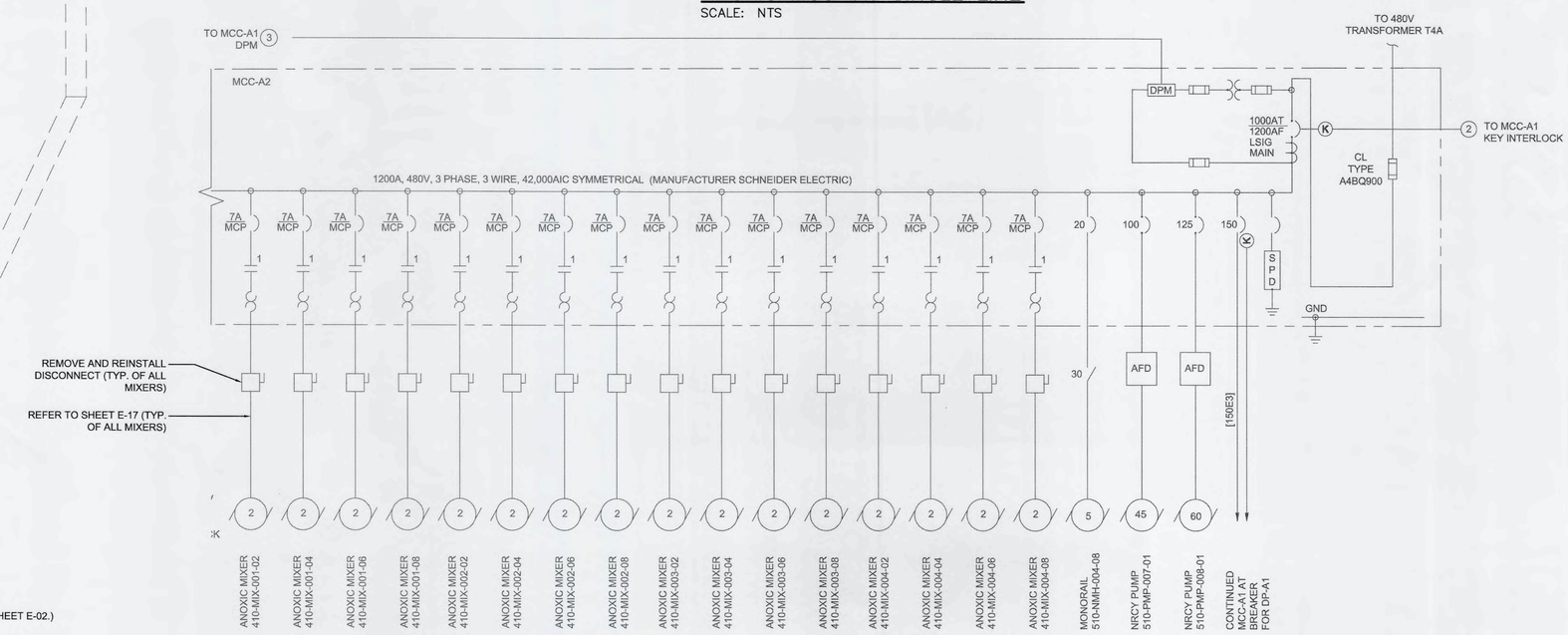

ANOXIC MCC-A2 SINGLE LINE

SCALE: NTS

REV.NO.	DESCRIPTIONS	DATE

REVISIONS

AUBREY ANAND HAUDRICOURT LICENSE No. 66861 STATE OF FLORIDA PROFESSIONAL ENGINEER 9-16-19

AUBREY A. HAUDRICOURT, P.E. No. 66861

SEAL

McKIM&CREED
1365 Hamlet Avenue
Clearwater, Florida 33756
Phone: (727)442-7196, Fax: (727)461-3827
CA LIC No. 29588
www.mckimcreed.com

Manatee County FLORIDA

SWWRF CCC REHAB AND RECHARGE WELL PS PROJECT

SOUTH BLOWER BUILDING ELECTRICAL PLAN AND ANOXIC SINGLE LINES

DATE:	SEPTEMBER, 2019
MCE PROJ. #	1024-0171
DRAWN	LLS
DESIGNED	AAH
CHECKED	JAG/ JV
PROJ. MGR.	TP

SCALE
HORIZONTAL: AS SHOWN
VERTICAL: NA

DRAWING NUMBER
E-05

STATUS: ISSUED FOR BID

REVISION

S:\1024 - Manatee Co\0171\90-Drawings\ELECTRICAL\E-05-1024017I - SOUTH BLOWER BUILDING PLAN.dwg, 9/17/2019 4:40:20 PM, Laurie Vieth

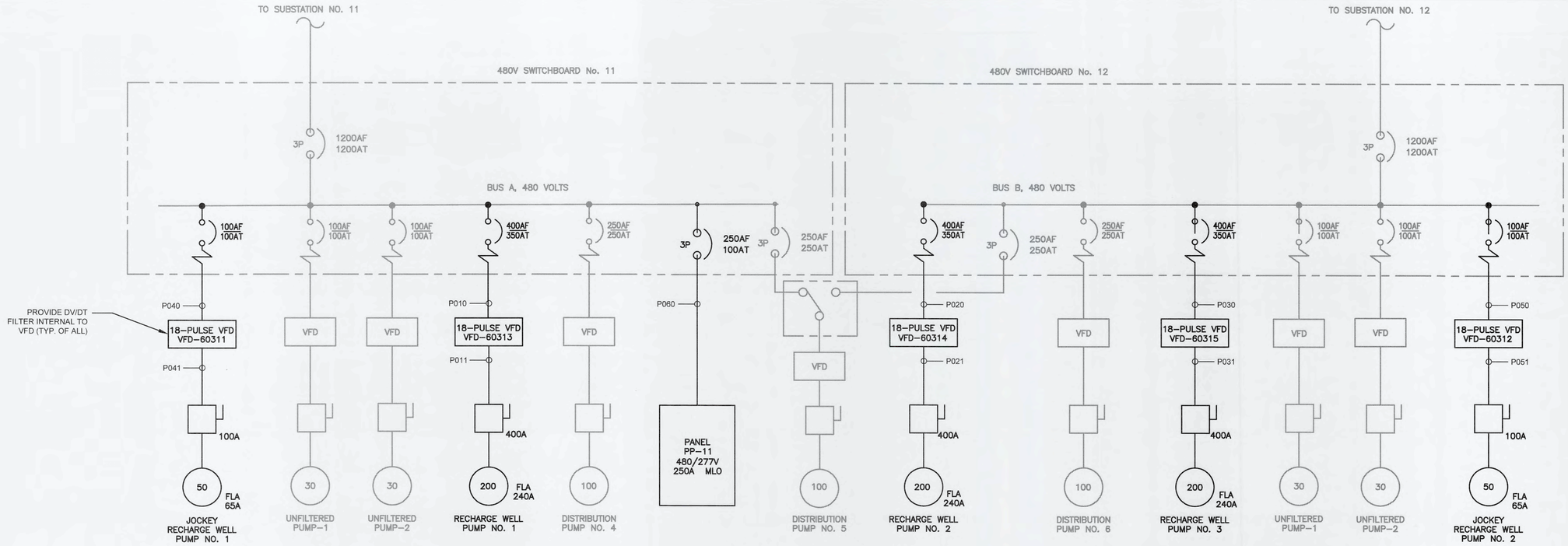

SINGLE LINE DIAGRAM:

SCALE: NTS

SWITCHBOARD NO. 11 LOAD TABLE				
EQUIPMENT	HP/KVA	QUANTITY	COMBINED FLA	REMARKS
JOCKEY RECHARGE WELL PUMP NO. 1	50	1	65	PROPOSED
UNFILTERED PUMPS	30	2	80	EXISTING
RECHARGE WELL PUMP NO. 1	200	1	240	PROPOSED
DISTRIBUTION PUMPS	100	2	248	EXISTING
NEW PANEL PP-11	15	4	44	SEE PANEL SCHEDULE
25% OF LARGEST MOTOR	200	0.25	60	PER NEC 430.24
COMBINED TOTAL	310		677	EXISTING SUBSTATION 11 IS 750KVA

SWITCHBOARD NO. 12 LOAD TABLE				
EQUIPMENT	HP/KVA	QUANTITY	COMBINED FLA	REMARKS
JOCKEY RECHARGE WELL PUMP NO. 2	50	1	96	PROPOSED
UNFILTERED PUMPS	30	2	80	EXISTING
DISTRIBUTION PUMPS	100	1	124	EXISTING
RECHARGE WELL PUMPS NO. 2 & 3	200	2	480	PROPOSED
25% OF LARGEST MOTOR	200	0.25	60	PER NEC 430.24
COMBINED TOTAL	210		780	EXISTING SUBSTATION 12 IS 750KVA

CKT NO.	TRIP AMPS	DESCRIPTION OF LOAD	LOAD KVA	AMPS	POLES	KVA PER PHASE A	B	C	POLES	AMPS	LOAD KVA	DESCRIPTION OF LOAD	TRIP AMPS	CKT NO.
1	30	CCC MIXER NO. 1 STARTER/CONTROL PANEL LCP-MX60111	7.5	9.0	3	5.0	5.0	5.0	3	9.0	7.5	CCC MIXER NO. 2 STARTER/CONTROL PANEL LCP-MX60121	30	2
7	30	CCC MIXER NO. 3 STARTER/CONTROL PANEL LCP-MX60131	7.5	9.0	3	5.0	5.0	5.0	3	9.0	7.5	CCC RECEPTACLES/STARTERS FOR PORTABLE DEWATERING PUMP	30	8
13	30	LAKE FILTER SAMPLE PUMP STARTER/CONTROL PANEL LCP-60050	0.5	0.6	3	0.2	0.2	0.2	3			SPARE	30	14
19	20	SPARE			3	0.0	0.0	0.0	3			SPARE	20	20
25		SPACE			3	0.0	0.0	0.0	3			SPACE		26
31		SPACE			3	0.0	0.0	0.0	3			SPACE		32
37	40	SURGE PROTECTION DEVICE			3	0.0	0.0	0.0	3			SPACE		38
						TOTAL KVA	10.2	10.2	10.2					
						GRAND CONNECTED TOTAL KVA		30.5						

PANEL **PP-11**
LOCATION MANATEE COUNTY SWWRF
BUILDING MAIN ELELCTRICAL BUILDING
NOTES: NEW NEMA 12, STAINLESS STEEL PANEL FED FROM SWGR NO. 11

SERVICE CHARACTERISTICS
VOLTS: 480Y/277
PHASE: 3
WIRE: 4
65,000 MIN AIC SYMM, FULLY RATED ASSEMBLY
250 A MLO
A MCB

CCC SINGLE LINE DIAGRAMS AND PANEL SCHEDULES

SCALE: NTS

REV.NO.	DESCRIPTIONS	DATE

REVISIONS

SEAL
AUBREY ARMAND HAUDRICOURT
LICENSE
No. 66861
9-16-19
STATE OF FLORIDA
PROFESSIONAL ENGINEER
AUBREY A. HAUDRICOURT, P.E.
No. 66861

SEAL

McKIM&CREED
1365 Hamlet Avenue
Clearwater, Florida 33756
Phone: (727)442-7196, Fax: (727)461-3827
CA LIC No. 29588
www.mckimcreed.com

Manatee County FLORIDA

SWWRF
CCC REHAB AND
RECHARGE WELL PS PROJECT

CCC SINGLE LINE DIAGRAMS
AND PANEL SCHEDULES

DATE:	SEPTEMBER, 2019
MCE PROJ. #	1024-0171
DRAWN	LLS
DESIGNED	AAH
CHECKED	JAG/MAC
PROJ. MGR.	TP

SCALE
HORIZONTAL: NA
VERTICAL: NA

DRAWING NUMBER
E-06

STATUS: ISSUED FOR BID
REVISION

S:\1024 - Manatee Co\0171\90-Drawings\ELECTRICAL\E-06-1024017I - SINGLE LINE.dwg, 9/16/2019 3:07:32 PM, Aubrey Haudricourt

ELECTRICAL PARTIAL SITE PLAN
SCALE: 1" = 20'-0"

10 0 10 20
SCALE: 1" = 20'

REV.NO.	DESCRIPTIONS	DATE
	REVISIONS	

SEAL
AUBREY ARMAND HAUDRICOURT LICENSE No. 66861 STATE OF FLORIDA PROFESSIONAL ENGINEER
9-16-19
AUBREY A. HAUDRICOURT, P.E.
No. 66861

SEAL

McKIM&CREED
1365 Hamlet Avenue
Clearwater, Florida 33756
Phone: (727)442-7196, Fax: (727)461-3827
CA LIC No. 29588
www.mckimcreed.com

Manatee County FLORIDA

SWWRF
CCC REHAB AND
RECHARGE WELL PS PROJECT

ELECTRICAL PARTIAL SITE PLAN

DATE:	SEPTEMBER, 2019
MCE PROJ. #	1024-0171
DRAWN	LLS
DESIGNED	AAH
CHECKED	JAG/JV
PROJ. MGR.	TP

SCALE
HORIZONTAL: 1" = 20'-0"
VERTICAL: NA

DRAWING NUMBER
E-07

STATUS: ISSUED FOR BID
REVISION

S:\1024 - Manatee Co\0171\80-Drawings\ELECTRICAL\E-07-10240171 - Electrical Partial Site Plan.dwg, 9/16/2019 3:08:07 PM, Aubrey Haudricourt

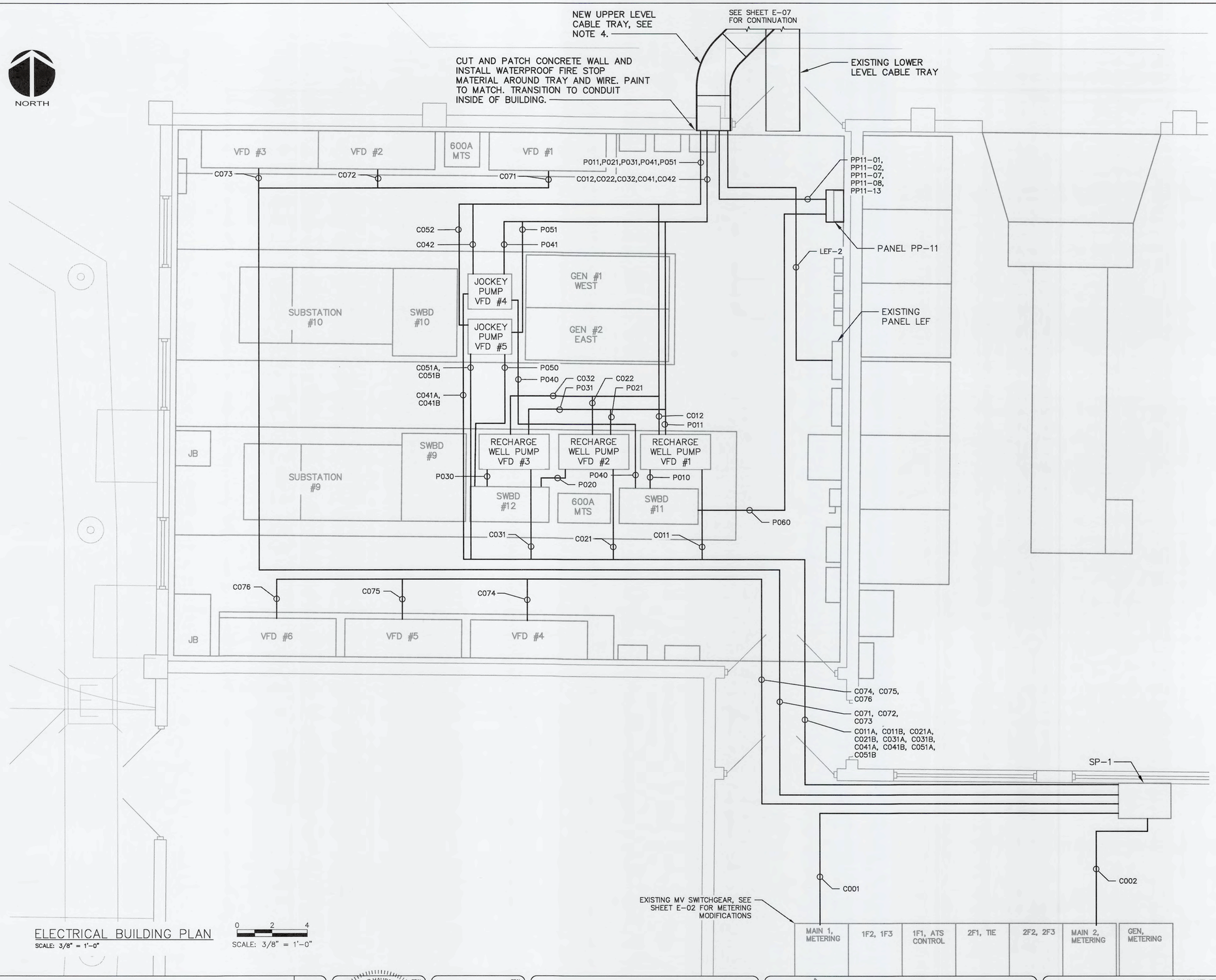

ELECTRICAL BUILDING PLAN

SCALE: 3/8" = 1'-0"

0 2 4

SCALE: 3/8" = 1'-0"

NOTES:

1. CUT AND PATCH EXISTING CONCRETE AS REQUIRED FOR NEW UNDERGROUND CONDUIT DUCTBANK.
2. CONDUITS IN ELECTRICAL BUILDING SHALL BE ROUTED ABOVE DROP CEILING, PER NEC REQUIREMENTS.
3. SEE SHEET E-14 FOR RECHARGE WELL PUMP VARIABLE FREQUENCY DRIVE ELECTRICAL SCHEMATICS.
4. NEW CABLE TRAY FROM CONTACT CHAMBER SHALL BE MOUNTED ABOVE EXISTING TRAY WITH OFFSET ENTRY INTO ELECTRICAL BUILDING. SEE SHEET E-16 FOR CABLE TRAY DETAILS.

REV.NO.	DESCRIPTIONS	DATE
	REVISIONS	

SEAL: AUBREY ARMAND HAUDRICOURT, LICENSE No. 66861, STATE OF FLORIDA, PROFESSIONAL ENGINEER, 9-16-19

AUBREY ARMAND HAUDRICOURT, P.E. No. 66861

SEAL

McKIM&CREED
1365 Hamlet Avenue
Clearwater, Florida 33756
Phone: (727)442-7196, Fax: (727)461-3827
CA LIC No. 29588
www.mckimcreed.com

Manatee County FLORIDA

SWWRF
CCC REHAB AND
RECHARGE WELL PS PROJECT

ELECTRICAL BUILDING PLAN

DATE:	SEPTEMBER, 2019
MCE PROJ. #	1024-0171
DRAWN	LLS
DESIGNED	AAH
CHECKED	JAG/ JV
PROJ. MGR.	TP

SCALE
HORIZONTAL: 3/8" = 1'-0"
VERTICAL: NA

DRAWING NUMBER
E-08

STATUS: ISSUED FOR BID

REVISION

S:\1024 - Manatee Co\171\90-Drawings\ELECTRICAL\E-08-1024017I - Main Electrical Building Plan.dwg, 9/16/2019 3:53:21 PM, Aubrey Haudricourt

NOTES:

1. 316SS NEMA 4X INSTALL ON HANDRAIL. JUNCTION BOX PROVIDED BY VENDOR, MIN 4"X4"X2".
2. INTERCEPT EXISTING 120V POWER FEED, FROM PANEL BOARD LE-5, AND REROUTE TO NEW SP13 PANEL. PROVIDE JUNCTION BOX WITH TERMINAL BLOCKS AS NECESSARY.
3. EXISTING EQUIPMENT TO REMAIN. REROUTE CONDUIT TO CABLE RACK AND NEW LOCATION OF SP-13 PANEL AND RUN NEW WIRE.
4. EXISTING FLOW METER TRANSMITTER TO BE RELOCATED TO ANALYTICAL PANEL. UTILIZE EXISTING CABLE BY VENDOR IF LENGTH IS SUFFICIENT, OTHERWISE RUN NEW CABLE BY VENDOR.

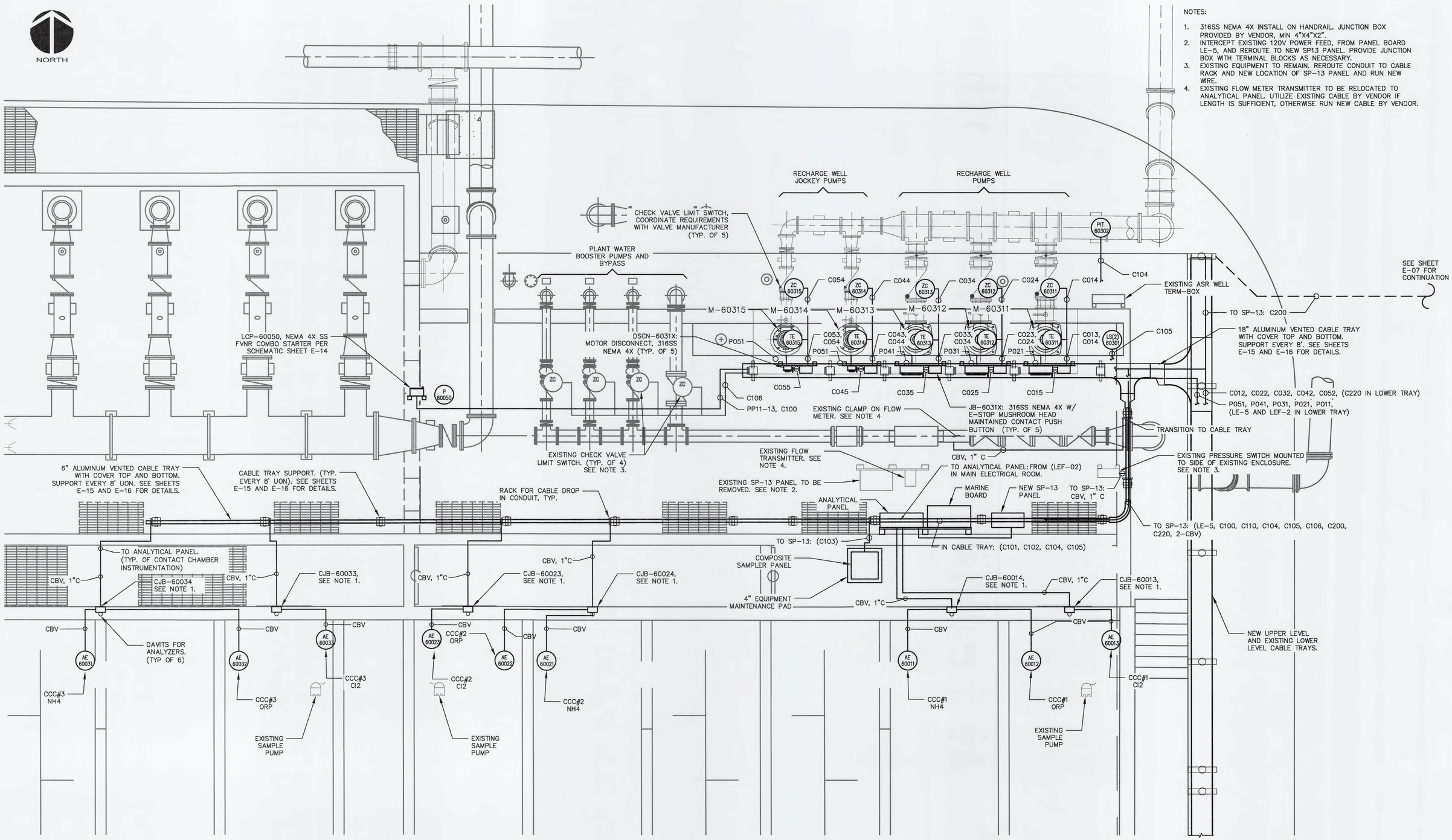

RECHARGE WELL PUMP STATION ELECTRICAL PLAN

SCALE: 1/4" = 1'-0"

2 0 6

SCALE: 1/4" = 1'-0"

REV.NO.	DESCRIPTIONS	DATE
	REVISIONS	

SEAL

AUBREY ARMAND HAUDRICOURT LICENSE No. 66861 STATE OF FLORIDA PROFESSIONAL ENGINEER

9-16-19

AUBREY A. HAUDRICOURT, P.E. No. 66861

SEAL

McKIM&CREED
1365 Hamlet Avenue
Clearwater, Florida 33756
Phone: (727)442-7196, Fax: (727)461-3827
CA LIC No. 29588
www.mckimcreed.com

Manatee County FLORIDA

SWWRF
CCC REHAB AND
RECHARGE WELL PS PROJECT

RECHARGE WELL PUMP STATION
ELECTRICAL PLAN

DATE:	SEPTEMBER, 2019
MCE PROJ. #	1024-0171
DRAWN	LLS
DESIGNED	AAH
CHECKED	JAG/JV
PROJ. MGR.	TP

SCALE
HORIZONTAL: 1/4" = 1'-0"
VERTICAL: NA

DRAWING NUMBER
E-09

STATUS: ISSUED FOR BID

REVISION

S:\1024 - Manatee Co\0171\06-Drawings\ELECTRICAL\E-09-102401711 - DETAIL-AREA1.dwg, 9/16/2019 3:31:20 PM, Aubrey Haudricourt

NOTES:

1. ROUTE NEW CONDUIT OVERHEAD UTILIZING EXISTING CABLE TRAY SUPPORT. CUT AND PATCH EXISTING CONCRETE AS REQUIRED FOR TRANSITION ABOVE GRADE.
2. SEE SHEET E-14 FOR CHEMICAL INDUCTION MIXER CONTROL PANEL ELECTRICAL SCHEMATICS.
3. PORTABLE DEWATERING PUMP COMBINATION MOTOR STARTER WITH START/STOP PUSH BUTTON AND RUN/STOP FAIL PILOT LIGHTS WITH RESET. 316SS NEMA 4X W/480V MELTRIC PLUG AND RECEPTACLE. CONTRACTOR TO CONNECT PLUG TO VENDOR CABLE.

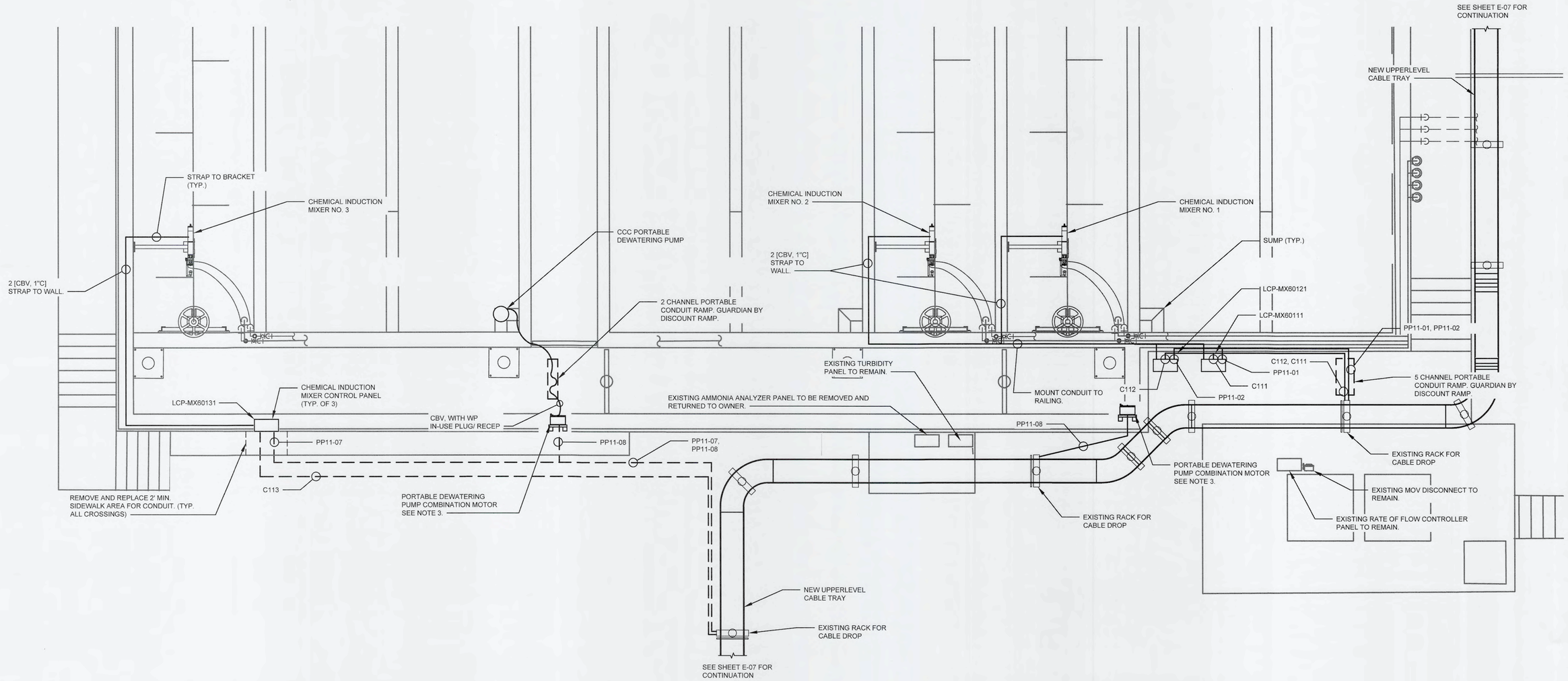

CHLORINE CONTACT CHAMBER ELECTRICAL PLAN

SCALE: 1/4" = 1'-0"

2 0 6

SCALE: 1/4" = 1'-0"

REV.NO.	DESCRIPTIONS	DATE
	REVISIONS	

SEAL: AUBREY ARMAND HAUDRICOURT, LICENSE No. 66861, STATE OF FLORIDA, PROFESSIONAL ENGINEER, 7-16-19, AUBREY A. HAUDRICOURT, P.E. No. 66861

SEAL

McKIM&CREED
1365 Hamlet Avenue
Clearwater, Florida 33756
Phone: (727)442-7196, Fax: (727)461-3827
CA LIC No. 29588
www.mckimcreed.com

Manatee County FLORIDA

SWWRF
CCC REHAB AND
RECHARGE WELL PS PROJECT

CHLORINE CONTACT CHAMBER
ELECTRICAL PLAN

DATE:	SEPTEMBER, 2019
MCE PROJ. #	1024-0171
DRAWN	LLS
DESIGNED	AAH
CHECKED	JAG/ JV
PROJ. MGR.	TP

SCALE
HORIZONTAL: AS SHOWN
VERTICAL: NA

DRAWING NUMBER
E-10

STATUS: ISSUED FOR BID

REVISION

S:\1024 - Manatee Co\0171\90-Drawings\ELECTRICAL\E-10-1024017 1 - DETAIL-AREA2.dwg, 9/16/2019 3:31:35 PM, Aubrey Haudricourt

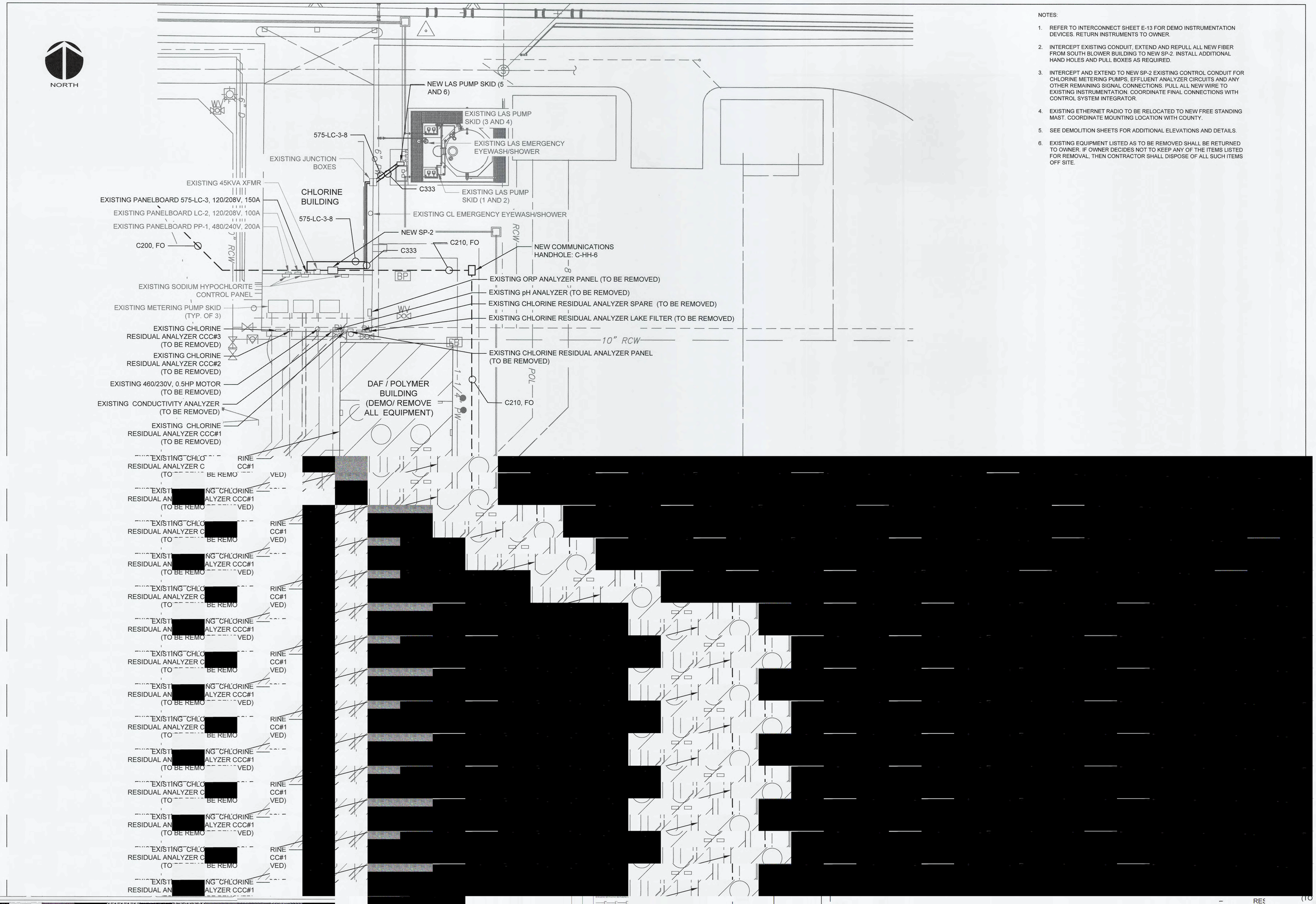

NOTES:

1. REFER TO INTERCONNECT SHEET E-13 FOR DEMO INSTRUMENTATION DEVICES. RETURN INSTRUMENTS TO OWNER.
2. INTERCEPT EXISTING CONDUIT, EXTEND AND REPULL ALL NEW FIBER FROM SOUTH BLOWER BUILDING TO NEW SP-2. INSTALL ADDITIONAL HAND HOLES AND PULL BOXES AS REQUIRED.
3. INTERCEPT AND EXTEND TO NEW SP-2 EXISTING CONTROL CONDUIT FOR CHLORINE METERING PUMPS, EFFLUENT ANALYZER CIRCUITS AND ANY OTHER REMAINING SIGNAL CONNECTIONS. PULL ALL NEW WIRE TO EXISTING INSTRUMENTATION. COORDINATE FINAL CONNECTIONS WITH CONTROL SYSTEM INTEGRATOR.
4. EXISTING ETHERNET RADIO TO BE RELOCATED TO NEW FREE STANDING MAST. COORDINATE MOUNTING LOCATION WITH COUNTY.
5. SEE DEMOLITION SHEETS FOR ADDITIONAL ELEVATIONS AND DETAILS.
6. EXISTING EQUIPMENT LISTED AS TO BE REMOVED SHALL BE RETURNED TO OWNER. IF OWNER DECIDES NOT TO KEEP ANY OF THE ITEMS LISTED FOR REMOVAL, THEN CONTRACTOR SHALL DISPOSE OF ALL SUCH ITEMS OFF SITE.

ID	FROM	TO	SETS	WIRES	WIRE SIZE	EQUIPMENT GROUND	CONDUIT SIZE (MIN)	SPARE?	NOTES	DUCT BANK(S):
	MAIN ELECTRICAL BUILDING									
P010	SWBD 11	VFD-60311	(1)	3 #	350	3 G	3.0"C		RECHARGE WELL PUMP NO. 1	
P011	VFD-60311	M-60311	(1)	3 #	350	3 G	4.0"C	(1)	SHIELDED VFD TRAY CABLE	

NOTES:

1. REFER TO DRAWING E-09 AND E-11. PROVIDE NEW CONDUIT AND WIRE FROM EXISTING EQUIPMENT TO SP-2.
2. EQUIPMENT TO REMAIN AND RECONNECTED TO SP-2 NEW LOCATION.
3. EQUIPMENT TO REMAIN AND RECONNECTED TO SP-13 NEW LOCATION.

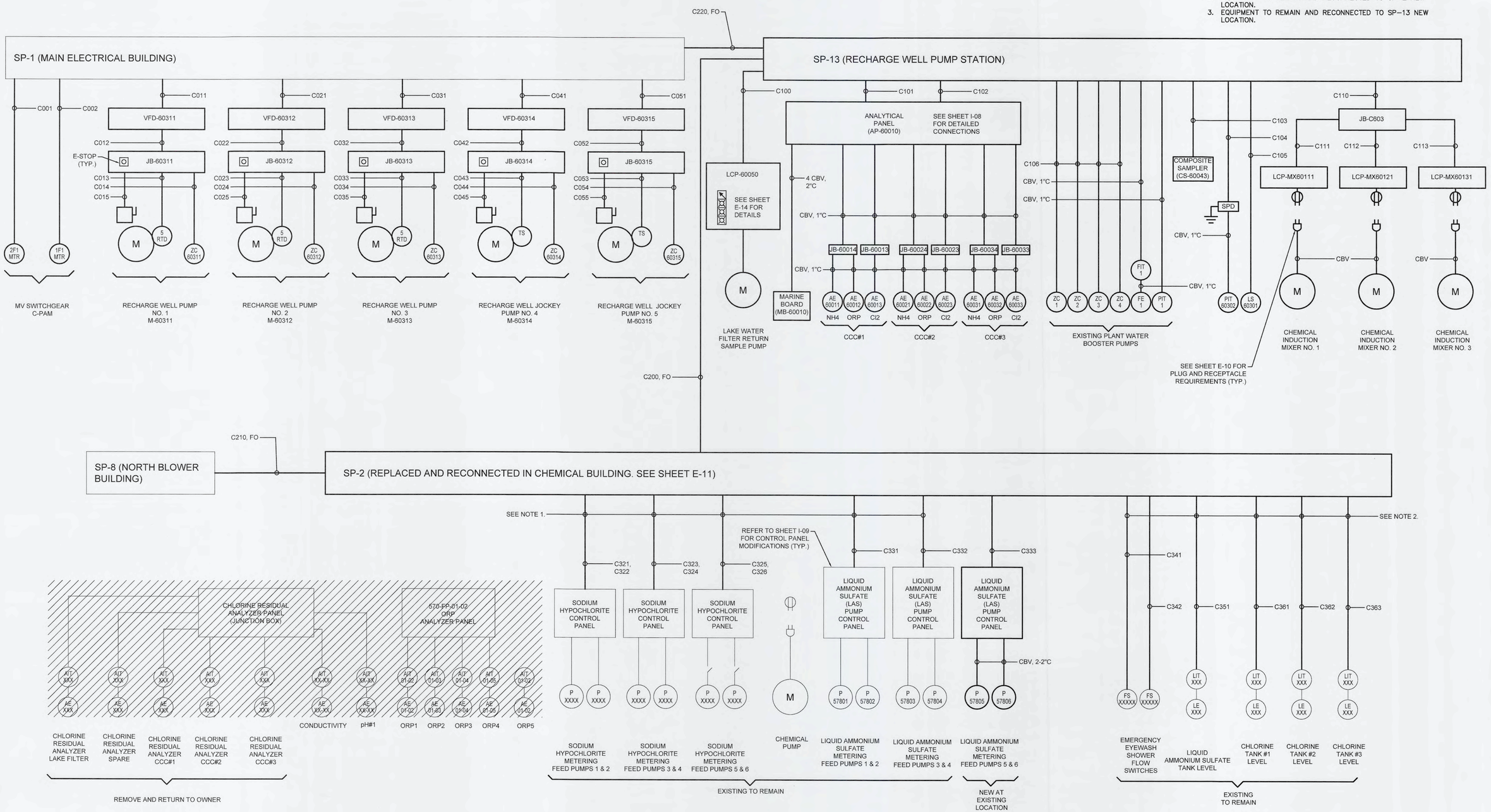

ELECTRICAL INTERCONNECTION DIAGRAM

SCALE: NTS

REV.NO.	DESCRIPTIONS	DATE

REVISIONS

SEAL: AUBREY ARMAND HAUDRICOURT, LICENSE No. 66861, STATE OF FLORIDA, PROFESSIONAL ENGINEER, 9-16-19, AUBREY A. HAUDRICOURT, P.E. No. 66861

SEAL

McKIM&CREED
1365 Hamlet Avenue
Clearwater, Florida 33756
Phone: (727)442-7196, Fax: (727)461-3827
CA LIC No. 29588
www.mckimcreed.com

Manatee County FLORIDA

SWWRF
CCC REHAB AND
RECHARGE WELL PS PROJECT

ELECTRICAL INTERCONNECTION DIAGRAM

DATE:	SEPTEMBER, 2019
MCE PROJ. #	1024-0171
DRAWN	LLS
DESIGNED	AAH
CHECKED	JAG/JV
PROJ. MGR.	TP

SCALE
HORIZONTAL: NA
VERTICAL: NA

DRAWING NUMBER
E-13

STATUS: ISSUED FOR BID

REVISION

S:\1024 - Manatee Co\0171\90-Drawings\ELECTRICAL\E-13-1024017I - INTERCONNECT.dwg, 9/16/2019 3:32:08 PM, Aubrey Haudricourt

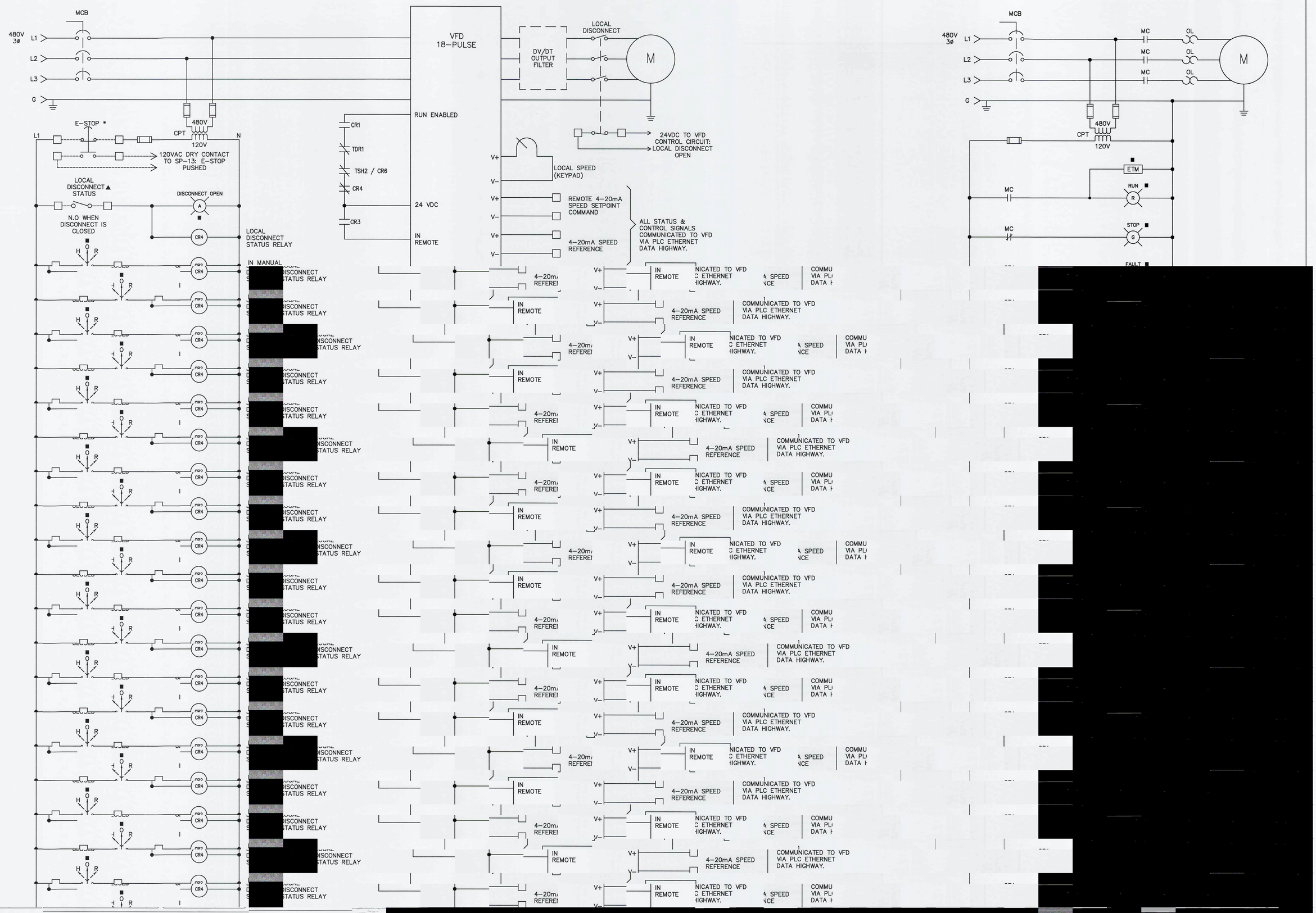
MCB
480V 3ø
L1
L2
L3
G
VFD 18-PULSE
DV/DT OUTPUT FILTER
LOCAL DISCONNECT
M
E-STOP *
CPT
480V
120V
N
120VAC DRY CONTACT TO SP-13: E-STOP PUSHED
RUN ENABLED
CR1
TDR1
TSH2 / CR6
CR4
CR3
24 VDC
IN REMOTE
24VDC TO VFD CONTROL CIRCUIT: LOCAL DISCONNECT OPEN
LOCAL SPEED (KEYPAD)
V+
V-
REMOTE 4-20mA SPEED SETPOINT COMMAND
4-20mA SPEED REFERENCE
ALL STATUS & CONTROL SIGNALS COMMUNICATED TO VFD VIA PLC ETHERNET DATA HIGHWAY.
LOCAL DISCONNECT ▲ STATUS
DISCONNECT OPEN
N.O WHEN DISCONNECT IS CLOSED
LOCAL DISCONNECT STATUS RELAY
IN MANUAL
H O R
IN REMOTE
COMMUNICATED TO VFD VIA PLC ETHERNET DATA HIGHWAY.
MC
OL
ETM
RUN
STOP
FAULT

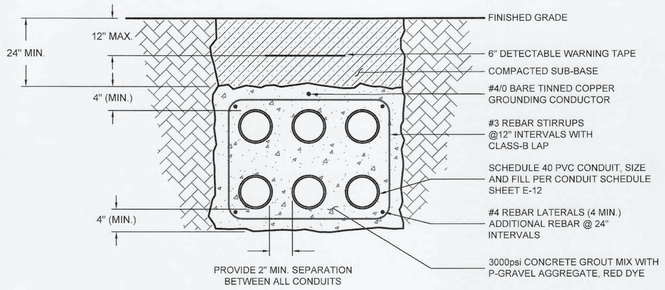

REINFORCED CONCRETE DUCTBANK

SCALE: NTS

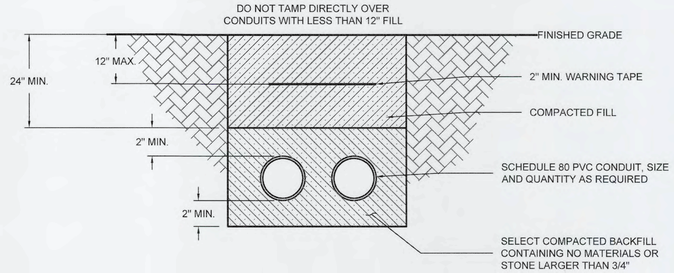

DIRECT BURIED DUCTBANK

SCALE: NTS

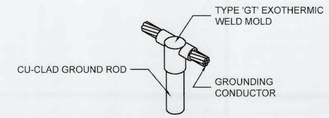

EXOTHERMIC WELD 'GT' CONNECTION

SCALE: NTS

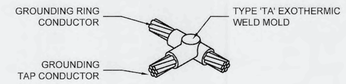

EXOTHERMIC WELD 'TA' CONNECTION

SCALE: NTS

NOTES:

1. CONDUITS IDENTIFIED ON SHEET E-16 AND ALL CONDUIT RUNS UNDERNEATH BUILDINGS SHALL BE IN REINFORCED CONCRETE DUCTBANKS. CONDUIT RUNS LONGER THAN 12" ARE NOT ALLOWED IN STRUCTURAL CONCRETE SLABS. ADDITIONAL UNDERGROUND CONDUIT RUNS NOT SHOWN OR OTHERWISE INDICATED SHALL BE DIRECT BURIED.
2. MINIMUM WIRE SIZE FOR ALL POWER CIRCUITS IS #12AWG CU UNLESS OTHERWISE NOTED.
3. MINIMUM CONDUIT SIZE IS 3/4" TRADE SIZE.
4. CONTRACTOR SHALL EMPLOY THE SERVICES OF A STRUCTURAL ENGINEER LICENSED IN THE STATE OF FLORIDA TO PROVIDE SIGNED AND SEALED DETAILS AND CALCULATIONS FOR THE NEW CABLE TRAY SUPPORT STRUCTURE. SEE SPECIFICATION 16600 FOR MORE INFORMATION.

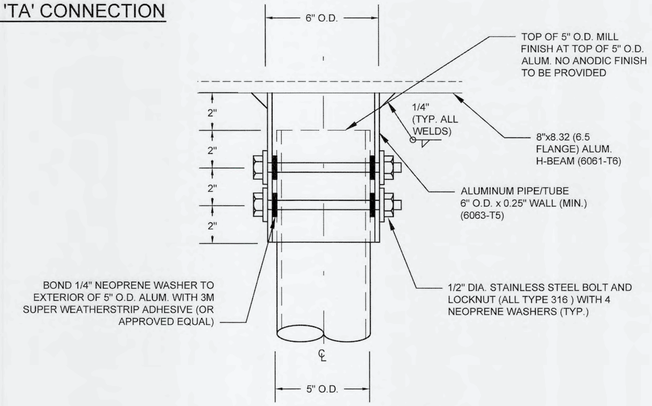

CABLE TRAY SUPPORT DETAIL

SCALE: NTS

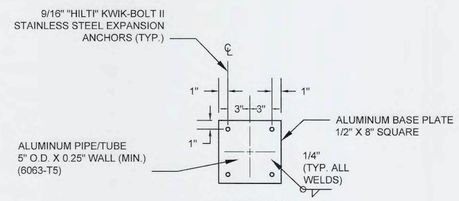

SECTION A

SCALE: NTS

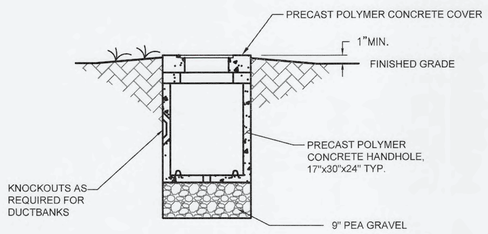

SMALL HANDHOLE DETAIL

SCALE: N.T.S.

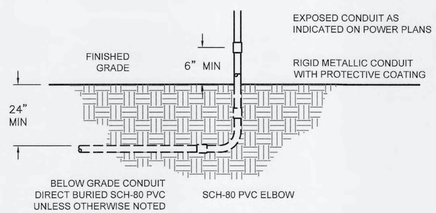

CONDUIT TRANSITION DETAIL

SCALE: NTS

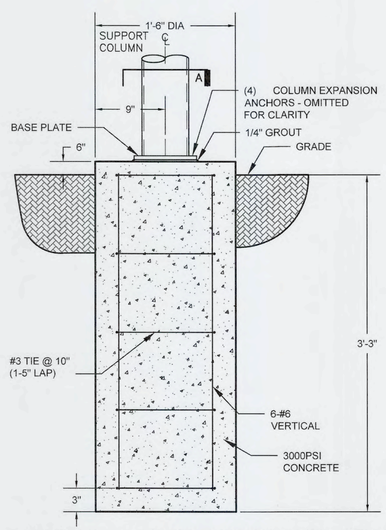

CABLE TRAY POST FOUNDATION DETAIL

SCALE: NTS

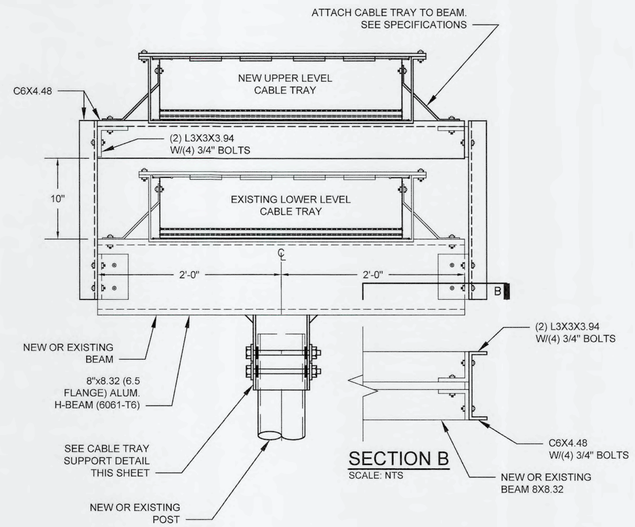

SECTION B

SCALE: NTS

EXISTING AND NEW MOUNTING DETAIL 24" UPPER LEVEL CABLE TRAY

SCALE: NTS

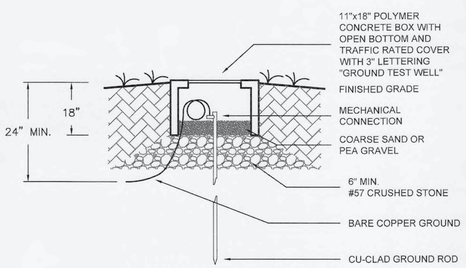

GROUND ROD TEST WELL

SCALE: NTS

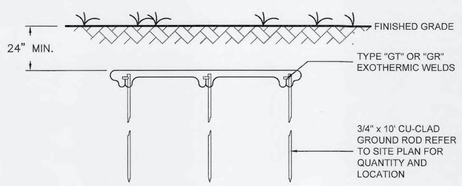

BELOW GRADE GROUND ROD/CABLE CONNECTION DETAIL

SCALE: NTS

ELECTRICAL DETAILS I

SCALE: NTS

REV.NO.	DESCRIPTIONS	DATE

REVISIONS

SEAL: AUBREY ARMAND HAUDRICOURT, LICENSE No. 66861, STATE OF FLORIDA, PROFESSIONAL ENGINEER, 9-16-19

AUBREY A. HAUDRICOURT, P.E. No. 66861

SEAL

McKIM&CREED
1365 Hamlet Avenue
Clearwater, Florida 33756
Phone: (727)442-7196, Fax: (727)461-3827
CA LIC No. 29588
www.mckimcreed.com

Manatee County FLORIDA

SWWRF
CCC REHAB AND
RECHARGE WELL PS PROJECT

ELECTRICAL DETAILS I

DATE:	SEPTEMBER, 2019
MCE PROJ. #	1024-0171
DRAWN	LLS
DESIGNED	AAH
CHECKED	JAG/JV
PROJ. MGR.	TP

SCALE
HORIZONTAL: NA
VERTICAL: NA

DRAWING NUMBER
E-15

STATUS: ISSUED FOR BID
REVISION

S:\1024 - Manatee Co\0171\05-Drawings\ELECTRICAL\E-15-1024171 - DETAILS I.dwg, 9/16/2019 3:06:16 PM, Aubrey Haudricourt

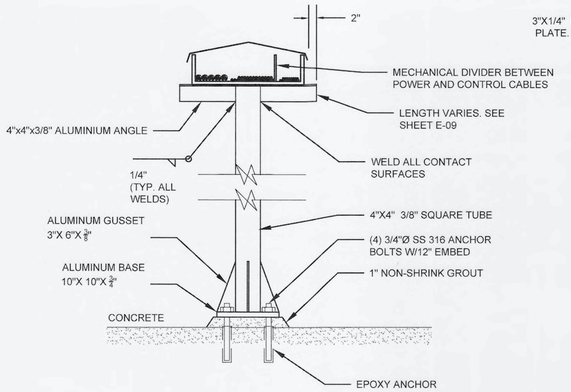

6" & 8" - CABLE TRAY SUPPORT DETAIL

SCALE: NTS

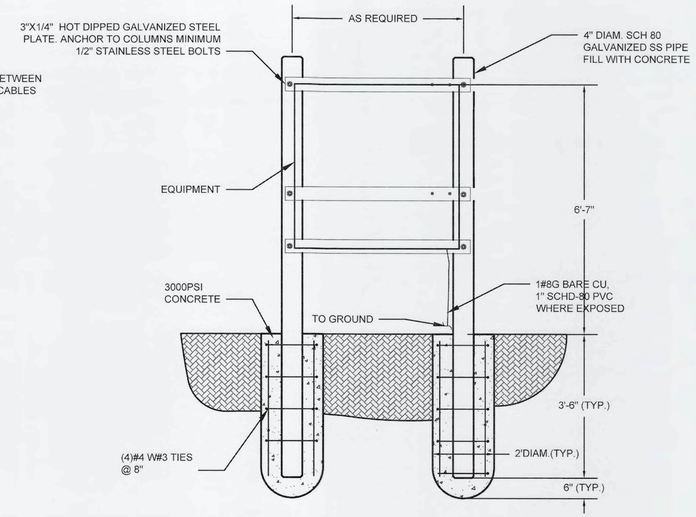

EQUIPMENT MOUNTING DETAIL (IN GROUND MOUNT)

SCALE: NTS

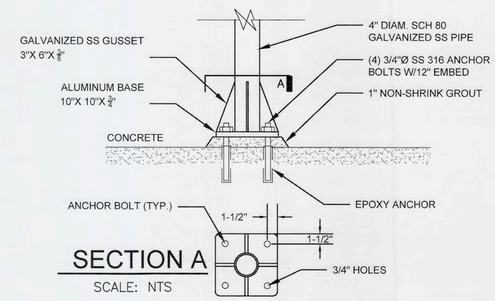

SECTION A

SCALE: NTS

EQUIPMENT MOUNTING DETAIL (ON SLAB)

SCALE: NTS

NOTES:

1. SEE SHEET E-15 FOR CONCRETE REINFORCED UNDERGROUND CONDUIT DUCTBANK DETAILS.
2. CONTRACTOR SHALL EMPLOY THE SERVICES OF A STRUCTURAL ENGINEER LICENSED IN THE STATE OF FLORIDA TO PROVIDE SIGNED AND SEALED DETAILS AND CALCULATIONS FOR THE NEW CABLE TRAY SUPPORT STRUCTURE. SEE SPECIFICATION 16600 FOR MORE INFORMATION.

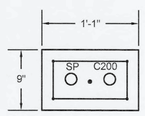

9 | E-07 E-16

DUCTBANK SECTION 9

LV DUCTBANK DETAIL

SCALE: NTS

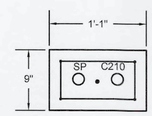

10 | E-07 E-16

DUCTBANK SECTION 10

LV DUCTBANK DETAIL

SCALE: NTS

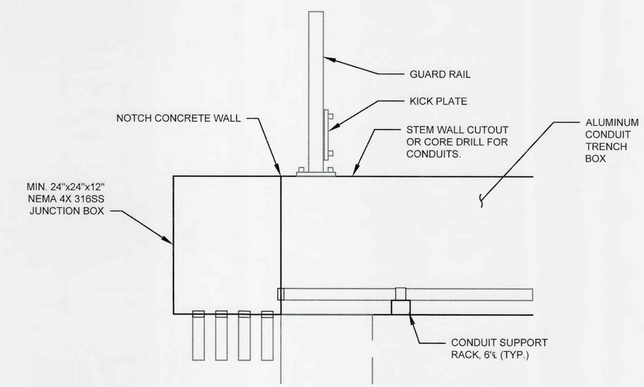

11 | E-16 E-16

SECTION 11

CONDUIT TRENCH DETAIL (REFER TO SHEET S-10)

SCALE: NTS

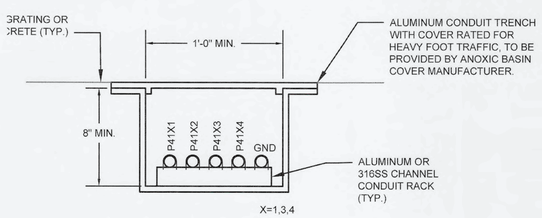

12 | E-17 E-16

SECTION 12

CONDUIT TRENCH DETAIL (REFER TO SHEET S-10)

SCALE: NTS

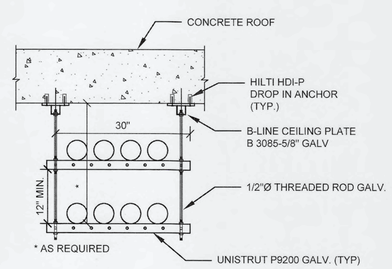

CONDUIT SUPPORT DETAIL (SUSPENDED SUPPORT)

SCALE: NTS

ELECTRICAL DETAILS II

SCALE: NTS

REV.NO.	DESCRIPTIONS	DATE

REVISIONS

SEAL: AUBREY ARMAND HAUDRICOURT, LICENSE No. 66861, STATE OF FLORIDA, PROFESSIONAL ENGINEER, 9-16-19

SEAL

McKIM&CREED
1365 Hamlet Avenue
Clearwater, Florida 33756
Phone: (727)442-7196, Fax: (727)461-3827
CA LIC No. 29588
www.mckimcreed.com

Manatee County FLORIDA

SWWRF
CCC REHAB AND
RECHARGE WELL PS PROJECT

ELECTRICAL DETAILS II

DATE:	SEPTEMBER, 2019
MCE PROJ. #	1024-0171
DRAWN	LLS
DESIGNED	AAH
CHECKED	JAG/JV
PROJ. MGR.	TP

SCALE: HORIZONTAL: NA VERTICAL: NA

DRAWING NUMBER: E-16

STATUS: ISSUED FOR BID

REVISION

S:\1024 - Manatee Co\0171\90-Drawings\ELECTRICAL\E-16-1024017I - DETAILS II.dwg, 9/16/2019 3:08:25 PM, Aubrey Haudricourt

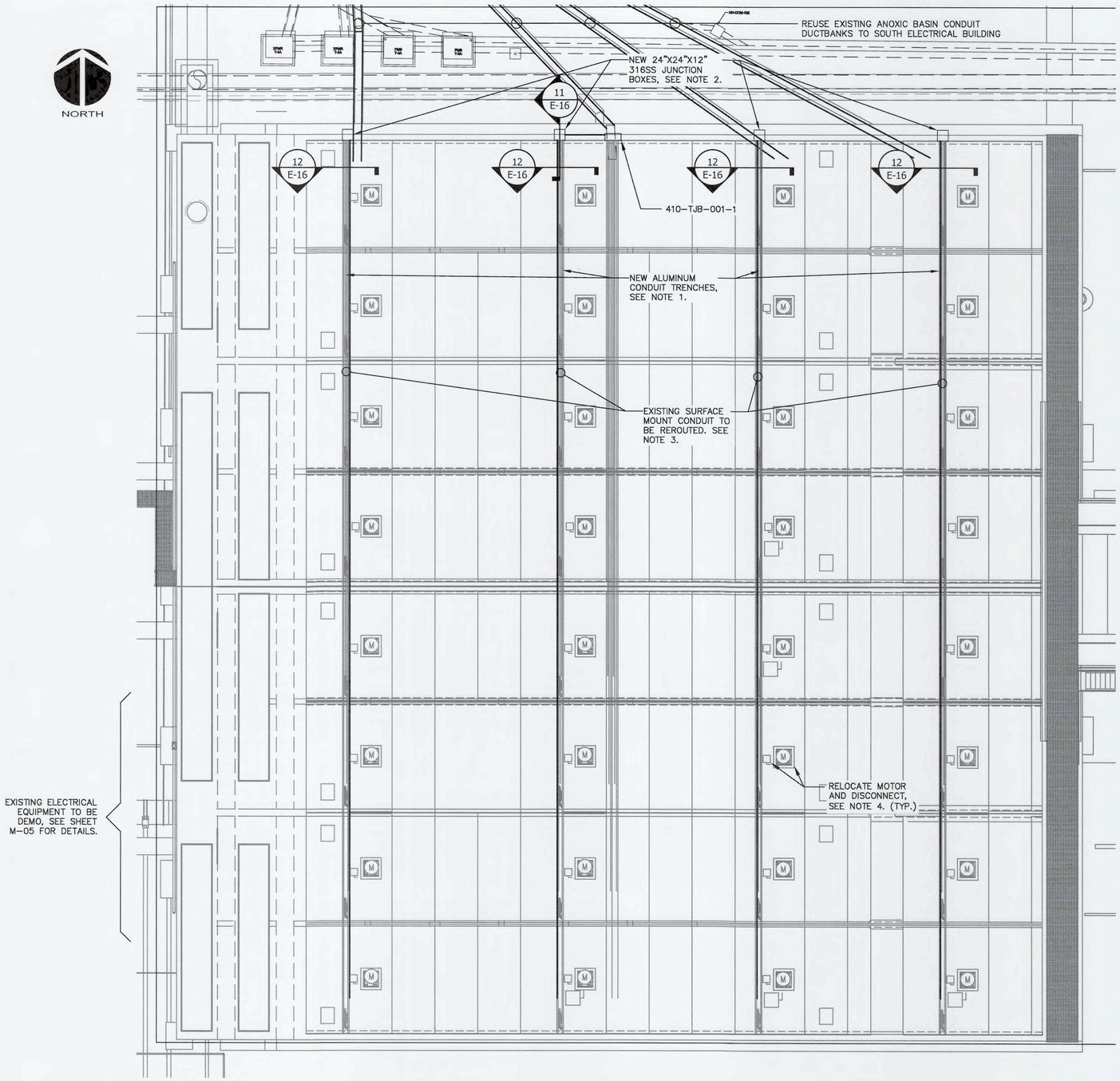

ANOXIC BASIN ELECTRICAL PLANS
SCALE: 3/32" = 1'-0"

6 0 6 12
SCALE: 3/32" = 1'-0"

NOTES:

1. COVERED ALUMINUM CONDUIT TRENCHES TO BE PROVIDED BY ANOXIC BASIN COVER MANUFACTURER. SEE STRUCTURAL SHEETS FOR ADDITIONAL INFORMATION. PROVIDE MINIMUM OF 6 INCHES OF SEPARATION BETWEEN 480V POWER AND 24VDC/ANALOG CONDUITS. SEE DETAILS SHEET E-16.
2. INSTALL NEW WALL MOUNT 316SS JUNCTION BOXES FOR CONSOLIDATION AND EXTENSION OF EXISTING CONDUITS TO EQUIPMENT VIA NEW CONDUIT TRENCHES. PROVIDE SEPARATE BOXES FOR 480V POWER AND 24VDC/ANALOG CABLES.
   - 2.1. CONTRACTOR TO CUT CONCRETE END TO ACCOMMODATE TRENCH BOX.
   - 2.2. CABLE/CONDUIT CONSOLIDATION SHALL BE PERFORMED AS FOLLOWS: TWO MIXER POWER CIRCUITS 2x[3#12, 1#12G] PER 1" CONDUIT: P41XY, WHERE X=1,2,3,4 AND Y=1,2,3,4
3. RELOCATE AND REUSE EXISTING CONDUIT FOR ANOXIC BASIN CIRCUITS. EXTENDING AS NEEDED. PULL ALL NEW WIRE, AVG 200FT TO MCC-A1, MCC-A2, 410-FAP-001-01 AND SP-15. SEE RISER 1 THIS SHEET, AND SHEET E-05 FOR MCC-A1 AND MCC-A2 SINGLE LINE DIAGRAMS.
4. COORDINATE THE RELOCATION AND RECONNECTION OF EXISTING MOTORS AND DISCONNECTS WITH STRUCTURAL MODIFICATIONS TO EXISTING PLATFORMS. INSTALL NEW SUPPORTS FOR EXISTING DISCONNECTS PER DETAIL SHEETS. GROUND AND BOND ALL EQUIPMENT, CONDUIT AND TRENCHES PER NEC.

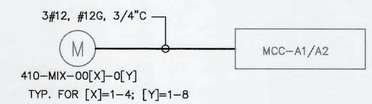

ANOXIC MIXER MOTOR

RISER DIAGRAM 1

SCALE: NTS

REV.NO.	DESCRIPTIONS	DATE
	REVISIONS	

AUBREY ARMAND HAUDRICOURT LICENSE No. 66861 STATE OF FLORIDA PROFESSIONAL ENGINEER SEAL
9-16-19
AUBREY A. HAUDRICOURT, P.E. No. 66861

SEAL

McKIM&CREED
1365 Hamlet Avenue
Clearwater, Florida 33756
Phone: (727)442-7196, Fax: (727)461-3827
CA LIC No. 29588
www.mckimcreed.com

Manatee County FLORIDA

SWWRF
CCC REHAB AND
RECHARGE WELL PS PROJECT

ANOXIC BASIN ELECTRICAL PLANS

DATE:	SEPTEMBER, 2019
MCE PROJ. #	1024-0171
DRAWN	LLS
DESIGNED	AAH
CHECKED	JAG/JV
PROJ. MGR.	TP

SCALE
HORIZONTAL: 3/32" = 1'
VERTICAL: NA

DRAWING NUMBER
E-17

STATUS: ISSUED FOR BID
REVISION

FUNCTION SYMBOL SCHEDULE

	FIRST LETTER		SUCCEEDING-LETTERS		
	MEASURED OR INITIATING VARIABLE	MODIFIER	READOUT OR PASSIVE FUNCTION	OUTPUT FUNCTION	MODIFIER
A	Analysis		Alarm		
B	Burner, Combustion		Programmer		
C	Conductivity (Electrical)			Control	Closed
D	Density or Specific Gravity	Differential			
E	Voltage		Sensor (Primary Element)	Eduction	
F	Flow Rate	Ratio (Fraction)			
G	Gaging		Glass, Viewing Device		
H	Hand				High
I	Current (Electrical)		Indicate		
J	Power	Scan			
K	Time, Time Schedule			Control Station	
L	Level		Light (Pilot)		Low
M	Motor				Middle, Intermediate
N	Vibration				
O	Operation	Offset	Orifice, Restriction		Open
P	Pressure, Vacuum		Point (Test) Connection		
Q	Quantity, Event	Integrate, Totalize	Integrate		
R	Radiation		Record, Print	Regulate	
S	Speed, Frequency	Safety		Switch	
T	Temperature			Transmit	
U	Multivariable	Trend	Multifunction	Multifunction	Multifunction
V	Viscosity	Vacuum		Valve, Damper, Louver, Gate	
W	Weight, Force, Torque		Well		
X	Unclassified		Unclassified	Unclassified	Unclassified
Y				Relay, Compute, Convert	
Z	Position			Final Control Element	Drive, Actuator, Unclassified Final Control Element

BASIC SYMBOLS

MULTIPLE FUNCTION

- OR — FIELD MOUNTED INSTRUMENT OR DEVICE
- OR — FRONT OF PANEL MOUNTED INSTRUMENT ON UCP OR MCC, VFD
- OR — REAR OF PANEL MOUNTED INSTRUMENT ON UCP OR MCC, VFD
- OR — FRONT OF PANEL MOUNTED INSTRUMENT ON MAIN PANEL
- OR — REAR OF PANEL MOUNTED INSTRUMENT ON MAIN PANEL
- OR — PLC AND/OR COMPUTER SOFTWARE COMPONENT (OPERATOR ACCESSIBLE UNDER NORMAL CONDITIONS)
- OR — PLC AND/OR COMPUTER GENERATED COMPONENT (NOT OPERATOR ACCESSIBLE UNDER NORMAL CONDITIONS)
- I/O PLC OR I/O PLC I/O PLC — PLC INPUT/OUTPUT

LINE CODES

- INSTRUMENT SIGNAL
- ELECTRICAL SIGNAL
- DATA LINK
- PNEUMATIC
- CAPILLARY
- SONIC OR R.F.
- HYDRAULIC
- TELEPHONE
- NO ELECTRICAL CONNECTION
- ELECTRICAL CONNECTIONS (INDICATED BY DOTS)
- HEAT TRACED PROCESS
- LINE OR EQUIPMENT
- MATCHLINE
- SHEET — PROCESS LINE OR ELECTRICAL SIGNAL CONTINUATION TO/FROM SHEET NUMBER INDICATED
- CONTINUATION ON SAME SHEET
- CONTINUATION ON FACILITIES NOT SHOWN ON DRAWINGS

VALVES, PUMPS & METERS

- FLAME ARRESTOR
- PINCH VALVE
- GATE
- NEEDLE
- BUTTERFLY
- BALL OR ROTARY
- GLOBE
- PLUG OR COCK
- DIAPHRAGM
- CHECK
- DIAPHRAGM CHECK
- CONTROL VALVE POSITIONER
- PRESSURE REGULATING VALVE
- BACKPRESSURE REGULATING VALVE
- PISTON OPERATED S=SOLENOID OPERATED M=MOTOR OPERATED P=PNEUMATIC OPERATED
- DRAIN
- Y=WEIR GATE T=SLIDE SLUICE GATE I =STOP LOG
- BLIND FLANGE
- PULSATION DAMPENER
- PRESSURE RELIEF OR SAFETY
- 3-WAY
- 4-WAY
- TELESCOPING
- REDUCER
- HOSE CONNECTION
- WAFER/CHECK VALVE
- UNION

VALVES, PUMPS & METERS (CONT'D)

- FLOAT SWITCH OR FLOAT
- (ARV) AIR RELEASE VALVE (ARVV) AIR VACUUM RELEASE VALVE
- ELECTRIC MOTOR
- ORIFICE/ANNUBAR
- PADDLE WHEEL FLOW METER
- POSITIVE DISPLACEMENT METER
- CAPACITANCE METER
- REGULATOR/FILTER
- SUBMERSIBLE PUMP
- MAGNETIC METER (INLINE/INSERT)
- ULTRASONIC METER
- VENTURI OR FLOW TUBE
- PROPELLER OR TURBINE METER
- DOPPLER OR TRANSIT TIME FLOW METER
- ROTAMETER
- PROGRESSIVE CAVITY PUMP
- CENTRIFUGAL PUMP
- VERTICAL TURBINE PUMP
- WELL PUMP
- POSITIVE DISPLACEMENT PUMP
- DIAPHRAGM OR METERING PUMP
- EDUCTOR
- STRAINER
- DIAPHRAGM ISOLATOR
- HORN
- GRADUATED MEASURING CYLINDER
- LATERAL WYE
- RUPTURE DISK
- RESTRAINED FLEX CONN.
- FLEX CONN.
- FILTER AIR/WATER
- CENTRIFUGAL BLOWER
- POSITIVE DISPLACEMENT BLOWER
- MIXER
- SUBMERSIBLE AERATOR/MIXER (ELECTRIC MOTOR DRIVEN)

MISCELLANEOUS SYMBOLS

- PURGE CONNECTION
- SAMPLE POINT
- INTERLOCK
- X — MULTIPLY
- ÷ — DIVIDE
- > — HIGH SELECT
- < — LOW SELECT
- √ — SQUARE ROOT
- Σ — SUM (ALGEBRAIC)
- f — SPECIAL FUNCTION
- R+B — RATIO PLUS BIAS
- dL/dt — RATE OF RISE (LEVEL)

EQUIPMENT NOTATION

- B = BLOWER OR FAN
- E = ENGINE
- G = GENERATOR
- F = FILTER
- GS = GRINDER/SCREEN
- K = COMPRESSOR
- H = HOIST
- ME = MECHANICAL EQUIPMENT
- MX = MIXER
- P = PUMP
- R = HEAT EXCHANGER
- T = TANK OR SUMP

VALVE DESIGNATIONS

- HV = HAND VALVE
- FCV = FLOW CONTROL VALVE (MODULATING)
- PRV = PRESSURE REGULATING VALVE
- LCV = LEVEL CONTROL VALVE
- FV = FLOW VALVE (NON-MODULATING)
- MV = MUD VALVE
- TV = TELESCOPING VALVE
- CV = CHECK VALVE
- MOV = MOTOR OPERATED VALVE

INSTRUMENT TAG NOTATION

FIC 0 1 01 A

- A — INSTRUMENT QUANTITY SUFFIX
- 01 — INSTRUMENT NUMBER
- 1 — PROCESS AREA
- 0 — PLANT AREA
- FIC — ISA INSTRUMENT FUNCTION

VALVE OPERATION NOTATION

- EFC = ELECTRIC FAIL CLOSE
- AFC = AIR FAIL CLOSE
- EFO = ELECTRIC FAIL OPEN
- AFO = AIR FAIL OPEN
- AFS = AIR FAIL STATIC
- EFS = ELECTRIC FAIL STATIC

CONTROLLER NOTATION

- PV = PROCESS VARIABLE INPUT
- SP = SET POINT INPUT
- C = CONTROL OUTPUT

PLC NOTATIONS

- AI = ANALOG INPUT
- AO = ANALOG OUTPUT
- DI = DISCRETE INPUT
- DO = DISCRETE OUTPUT
- D/A = DISCRETE TO ANALOG CONVERTOR
- SSDC = SURGE SUPPRESSION DEVICE

HAND SWITCH NOTATION

- HOA = HAND-OFF-AUTO
- S/S = START/STOP
- SEL = SELECTOR
- O/C = OPEN/CLOSE
- O/O = ON/OFF
- LOS = LOCKOUT-START
- D/S = DUTY/STANDBY
- FOS = FAST-OFF-SLOW
- OAC = OPEN-AUTO-CLOSE
- OOCA = OPEN-OFF-CLOSE-AUTO
- ROF = REVERSE-OFF-FORWARD
- ROL = RAISE-OFF-LOWER
- F/R = FORWARD/REVERSE
- HOR = HAND-OFF-REMOTE
- LOR = LOCAL-OFF-REMOTE
- SAR = SILENCE-AUTO-RESET

MISCELLANEOUS NOTATIONS

- S/D = SHUTDOWN
- O/R = OVERRIDE
- MCC = MOTOR CONTROL CENTER
- VFD = VARIABLE FREQUENCY DRIVE
- UCP = UNIT CONTROL PANEL
- LCP = LOCAL CONTROL PANEL
- MCP = MASTER CONTROL PANEL
- ES = ELECTRICAL SUPPLY
- IS = INLET SILENCER
- DS = DISCHARGE SILENCER
- SEQ = SEQUENCER/ALTERNATOR
- SPD = SURGE PROTECTION DEVICE
- DO = DISSOLVED OXYGEN
- ETM = ELAPSED TIME METER
- TURB = TURBIDITY
- US = ULTRASONIC

S = STATUS

THIS SYMBOL INDICATES THE FOLLOWING INSTRUMENTATION

FIELD | PCP/LCP/MCC | SCADA | GRAPHICS PANEL

XX XXX — A — OA XXX — FAIL — OA XXX — V=FAIL — FAULT — OA XXXX — A

AS APPLICABLE — KY XXX — VALVE TIMER

XX XXX — R — OL XXX — RUN — OL XXX — V=OPEN — RUN — OL XXXX — R

V=OPEN

XX XXX — G — OL XXX — READY — OL XXX — V=CLOSED — READY — OL XXXX — G

V=CLOSED — V=VALVE

TYPICAL FOR M

(IF NOT OTHERWISE ILLUSTRATED ON DWGS)

M = M — HS XXX — HS XXX — HS XXX

ZSO YYY.Y.Y — ZSC YYY.Y.Y

M = M — HS XXX — HS XXX — HS XXX

FIELD | PCP | SCADA

REV.NO.	DESCRIPTIONS	DATE

REVISIONS

MICHAEL D. TWEEDIE, LICENSE No. 60940, STATE OF FLORIDA, PROFESSIONAL ENGINEER — 9-13-2019

MICHAEL D. TWEEDIE, P.E. No. 60940

SEAL

McKIM&CREED
1365 Hamlet Avenue
Clearwater, Florida 33756
Phone: (727)442-7196, Fax: (727)461-3827
CA Lic. No. 29588
www.mckimcreed.com

Manatee County FLORIDA

SWWRF CCC REHAB AND RECHARGE WELL PS PROJECT

PROCESS AND INSTRUMENTATION DIAGRAM GENERAL NOTES, LEGEND AND ABBREVIATIONS

DATE:	SEPTEMBER, 2019
MCE PROJ. #	1024-0171
DRAWN	FEV
DESIGNED	FEV
CHECKED	MDT
PROJ. MGR.	TLP

SCALE — HORIZONTAL: N/A — VERTICAL: N/A

DRAWING NUMBER: N/A — I-01

STATUS: ISSUED FOR BID — REVISION

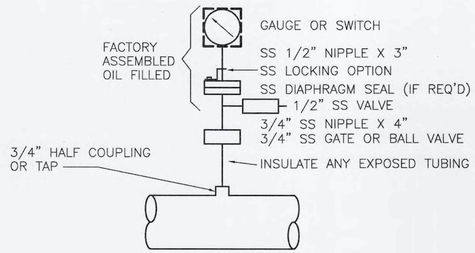

HORIZONTAL MOUNTING

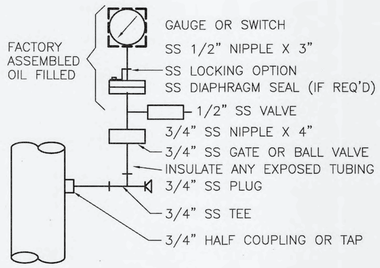

VERTICAL MOUNTING

TYPICAL PRESSURE INDICATOR/ SWITCH DETAIL

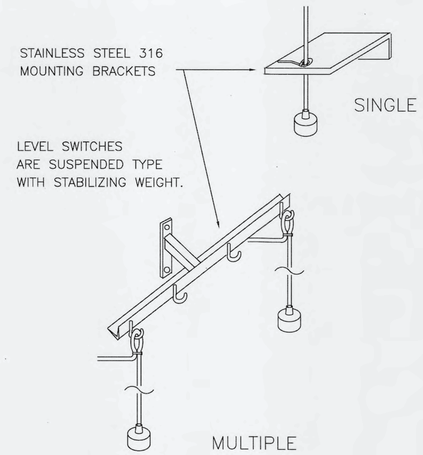

TYPICAL LEVEL SWITCH MOUNTING DETAIL

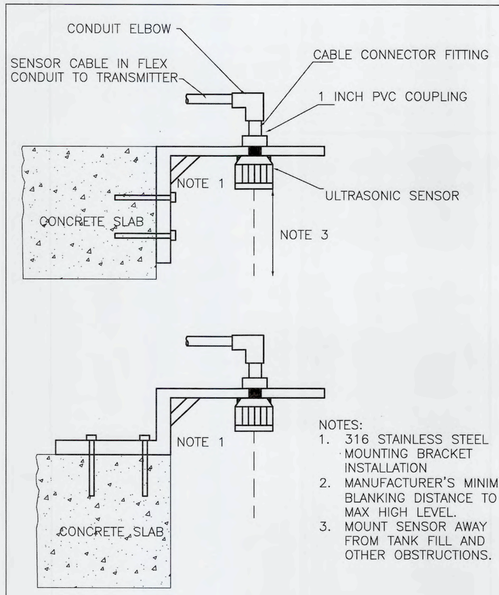

NOTES:
1. 316 STAINLESS STEEL MOUNTING BRACKET INSTALLATION
2. MANUFACTURER'S MINIMUM BLANKING DISTANCE TO MAX HIGH LEVEL.
3. MOUNT SENSOR AWAY FROM TANK FILL AND OTHER OBSTRUCTIONS.

ULTRASONIC SENSOR MOUNTING DETAIL

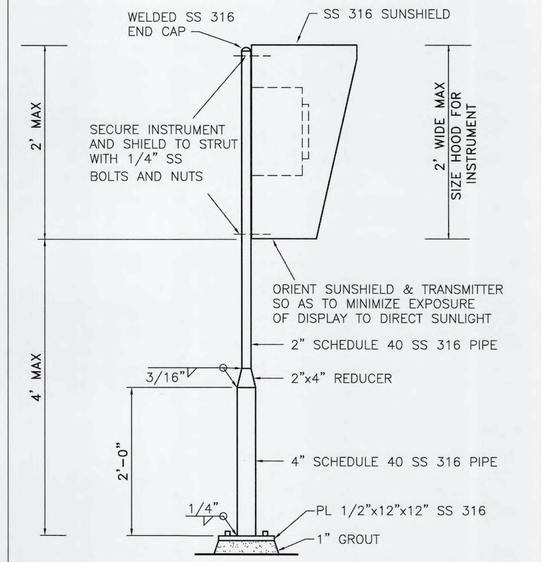

1 SECURE TO SLAB WITH (4) 3/4"Ø SS 316 ADHESIVE ANCHOR W/6" EMBED
2 USE SIMPSON SET-XP EPOXY ADHESIVE

SINGLE INSTRUMENT STANCHION MOUNT DETAIL

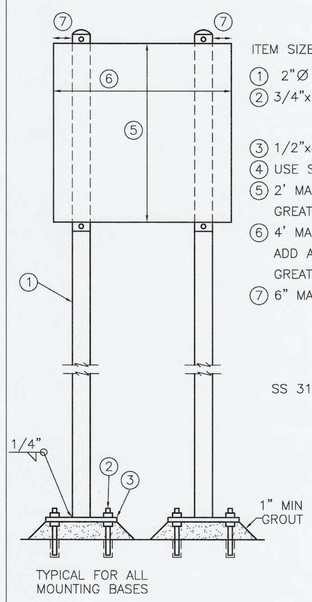

ITEM	SIZE	TYPICAL QTY	DESCRIPTION
1	2"Ø	72"H	SS 316 SCH40
2	3/4"x6"	4	SS 316 ADHESIVE ANCHOR W/6" EMBED AND NUTS
3	1/2"x8"x8"	1	SS 316 BASE PLATE

4 USE SIMPSON SET-XP EPOXY ADHESIVE
5 2' MAX. USE ADDITIONAL SUPPORT FOR GREATER DISTANCE
6 4' MAX FOR DUAL STATION. ADD ADDITIONAL STANCHION FOR GREATER DISTANCE
7 6" MAX.

SS 316 PIPE (SCHEDULE 40)

TYPICAL DUAL STANCHION MOUNT

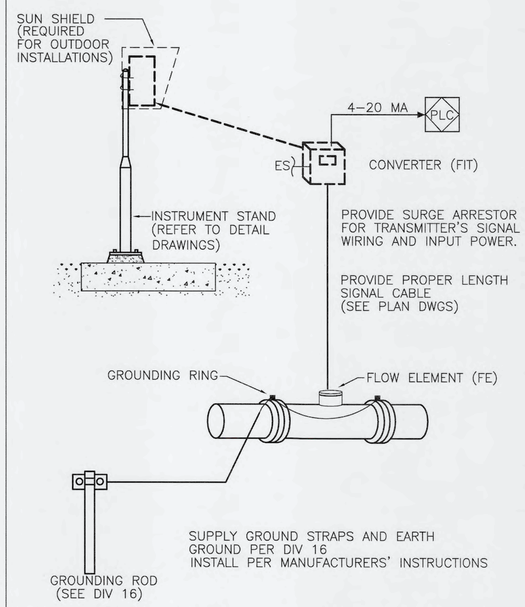

TYPICAL MAGNETIC FLOWMETER INSTALLATION

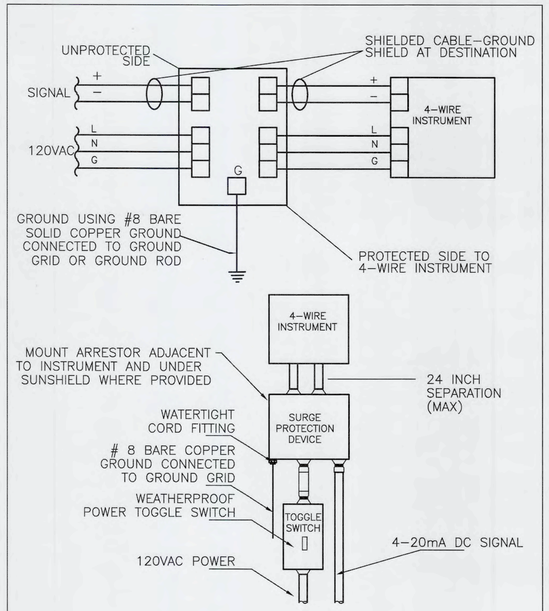

4-WIRE INSTRUMENT SURGE ARRESTOR INSTALLATION

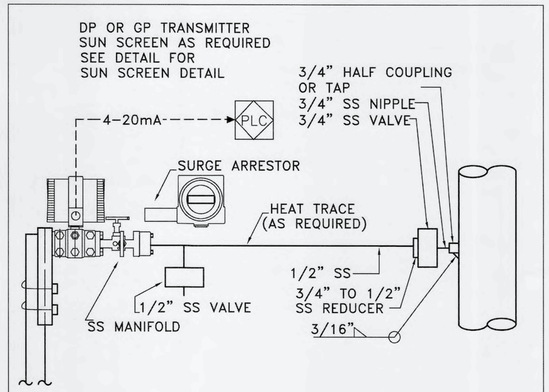

IF PIPING IS OVER 26' BETWEEN PIPE AND TRANSDUCER, USE 3/4" TUBING.

IF DP TRANSDUCER IS USED, VENT LOW PRESSURE CONNECTION TO ATMOSPHERE.

INSULATE ANY EXPOSED TUBING

TYPICAL PRESSURE TRANSDUCER PIPING

REV.NO.	DESCRIPTIONS	DATE
	REVISIONS	

MICHAEL D. TWEEDEL LICENSE No. 60940 STATE OF FLORIDA PROFESSIONAL ENGINEER
9-13-2019
MICHAEL D. TWEEDEL, P.E. No. 60940

SEAL

McKIM&CREED
1365 Hamlet Avenue
Clearwater, Florida 33756
Phone: (727)442-7196, Fax: (727)461-3827
CA Lic. No. 29588
www.mckimcreed.com

Manatee County FLORIDA

SWWRF
CCC REHAB AND
RECHARGE WELL PS PROJECT

INSTRUMENTATION DETAILS

DATE:	SEPTEMBER, 2019
MCE PROJ. #	1024-0171
DRAWN	FEV
DESIGNED	FEV
CHECKED	MDT
PROJ. MGR.	TLP

SCALE
HORIZONTAL: N/A
VERTICAL: N/A

DRAWING NUMBER
N/A
I-02

STATUS: ISSUED FOR BID
REVISION

\\mckimcreed.com\vosun\Data\Fin_server_data\CLIENT\Projects\1024 - manatee co\0171\80-drawings\instrumentation\XXX-1024-0171_1005.dwg, 9/13/2019 9:03:09 AM, Flavio Velezdo

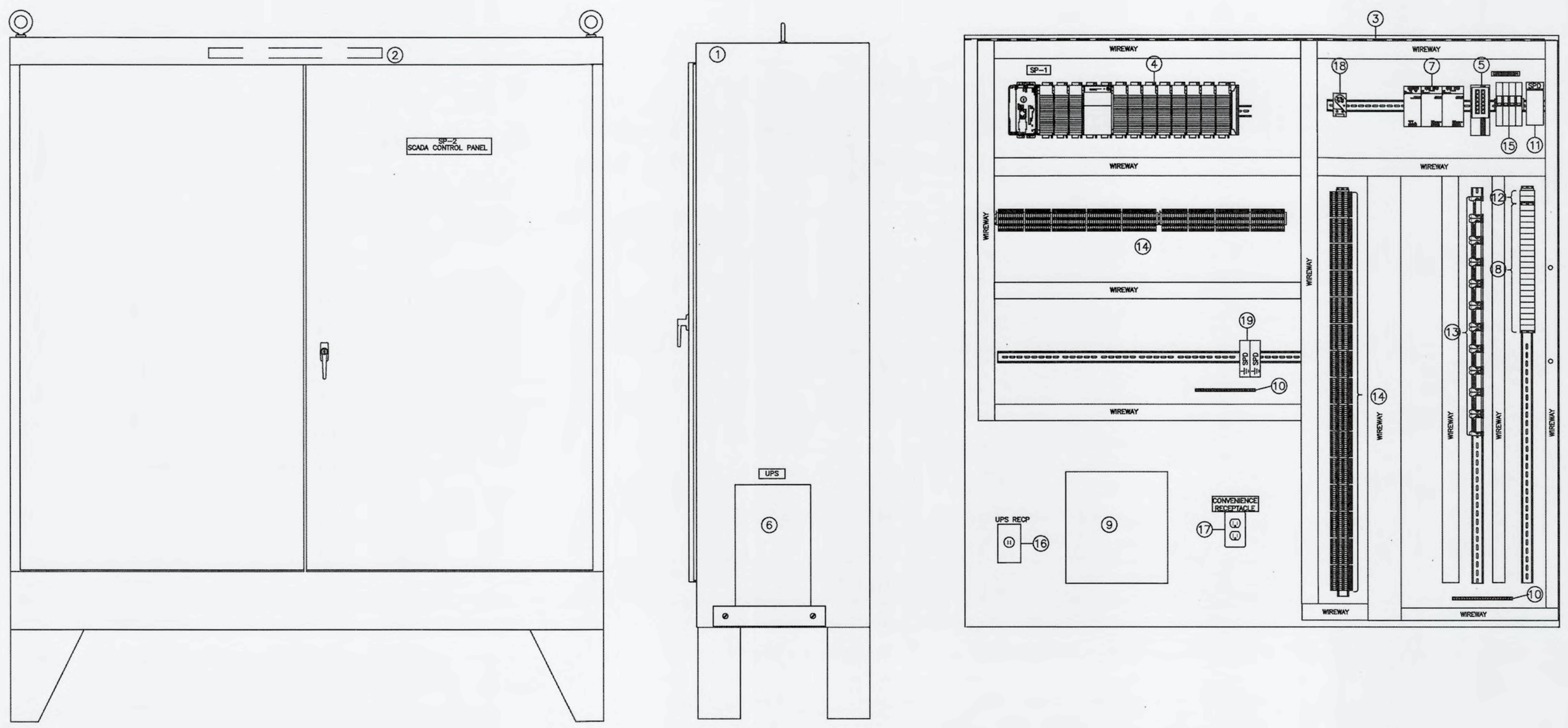

ENCLOSURE FRONT

ENCLOSURE SIDE

SUBPANEL LAYOUT

PLANT SCADA CONTROL PANEL (SP2)

NOT TO SCALE

NOTES:

1. ENCLOSURE W/LEGS, NEMA 4X, STAINLESS STEEL 316 WITH WHITE POWDER EPOXY COATING, 60"H x 60"W X 24"D APPROXIMATE.
2. LED LIGHT
3. ENCLOSURE SUBPANEL, STEEL, PAINTED WHITE
4. PLC HARDWARE
5. MANAGED ETHERNET NETWORK FIBER SWITCH
6. UNINTERRUPTABLE POWER SUPPLY (UPS)
7. POWER SUPPLY, REDUNDANT, 24VDC @ 10A OUT
8. CONTROL RELAYS, 24VDC COIL, DPDT
9. FIBER OPTIC TERMINATION PATCH PANEL CABLE
10. GROUND CONNECTOR
11. AC LINE SURGE SUPPRESSOR
12. CONTROL RELAYS, 120VAC, COIL, DPDT
13. ANALOG SURGE SUPPRESSORS
14. TERMINALS
15. CIRCUIT BREAKERS
16. UPS RECEPTACLE
17. 120VAC GFCI OUTLET
18. TEMPERATURE SWITCH
19. CAT6 SURGE ARRESTORS

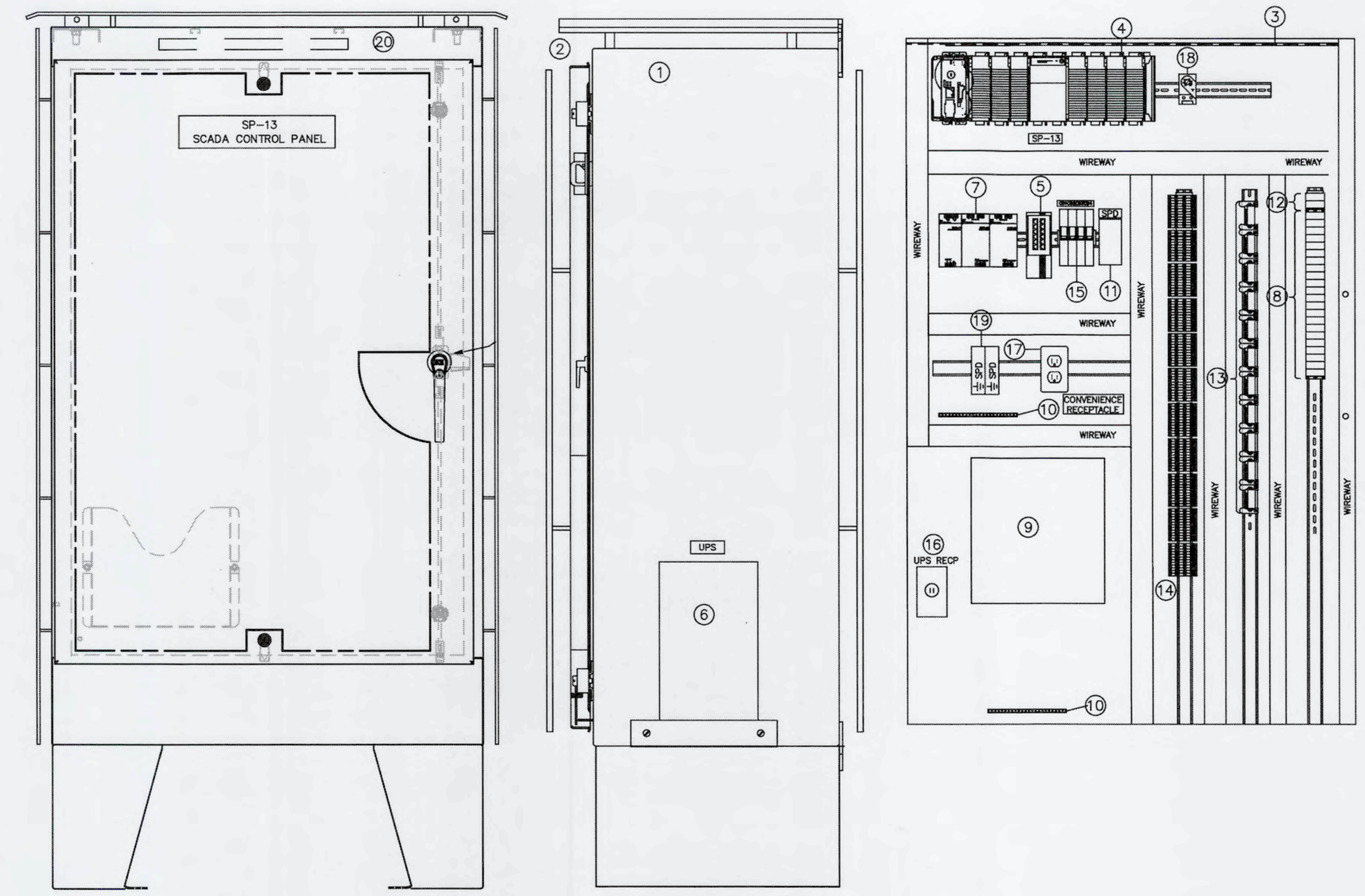

ENCLOSURE FRONT

ENCLOSURE SIDE

SUBPANEL LAYOUT

PLANT SCADA CONTROL PANEL (SP13)

NOT TO SCALE

NOTES:

1. ENCLOSURE, NEMA 4X, STAINLESS STEEL 316 WITH WHITE POWDER EPOXY COATING, 60"H x 36"W X 16"D APPROXIMATE.
2. SUN SHIELDS (TYPICAL) – STAINLESS STEEL 316 WITH WHITE POWDER EPOXY COATING
3. ENCLOSURE SUBPANEL, STEEL, PAINTED WHITE
4. PLC HARDWARE
5. MANAGED ETHERNET NETWORK FIBER SWITCH
6. UNINTERRUPTABLE POWER SUPPLY (UPS)
7. POWER SUPPLY, REDUNDANT, 24VDC @ 10A OUT
8. CONTROL RELAYS, 24VDC COIL, DPDT
9. FIBER OPTIC TERMINATION PATCH PANEL CABLE
10. GROUND CONNECTOR
11. AC LINE SURGE SUPPRESSOR
12. CONTROL RELAYS, 120VAC, COIL, DPDT
13. ANALOG SURGE SUPPRESSORS
14. TERMINALS
15. CIRCUIT BREAKERS
16. UPS RECEPTACLE
17. 120VAC GFCI OUTLET
18. TEMPERATURE SWITCH
19. CAT6 SURGE ARRESTORS FOR HARDWARE INSTRUMENT COMMUNICATIONS
20. LED LIGHT

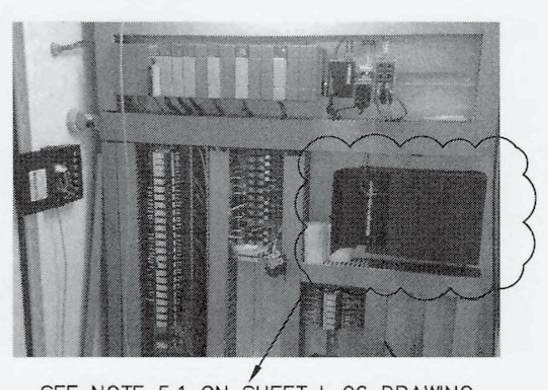

SEE NOTE 5.1 ON SHEET I–06 DRAWING

SP–8 MODIFICATIONS

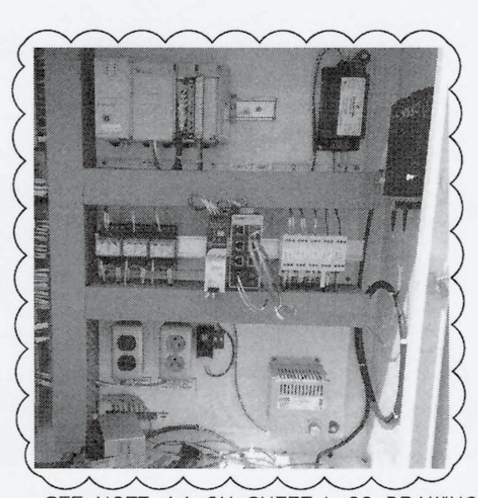

SEE NOTE 4.1 ON SHEET I–06 DRAWING

SP–13 MODIFICATIONS

REV.NO.	DESCRIPTIONS	DATE

REVISIONS

MICHAEL D. TWEEDEL, P.E. No. 60940

LICENSE No. 60940 STATE OF FLORIDA PROFESSIONAL ENGINEER 9-13-2019

SEAL

McKIM&CREED
1365 Hamlet Avenue
Clearwater, Florida 33756
Phone: (727)442–7196, Fax: (727)461–3827
CA Lic. No. 29588
www.mckimcreed.com

Manatee County FLORIDA

SWWRF
CCC REHAB AND
RECHARGE WELL PS PROJECT

INSTRUMENTATION AND PANEL DETAILS

DATE:	SEPTEMBER, 2019
MCE PROJ. #	1024–0171
DRAWN	FEV
DESIGNED	FEV
CHECKED	MDT
PROJ. MGR.	TLP

SCALE
HORIZONTAL: N/A
VERTICAL: N/A

DRAWING NUMBER N/A

I-03

STATUS: ISSUED FOR BID

REVISION

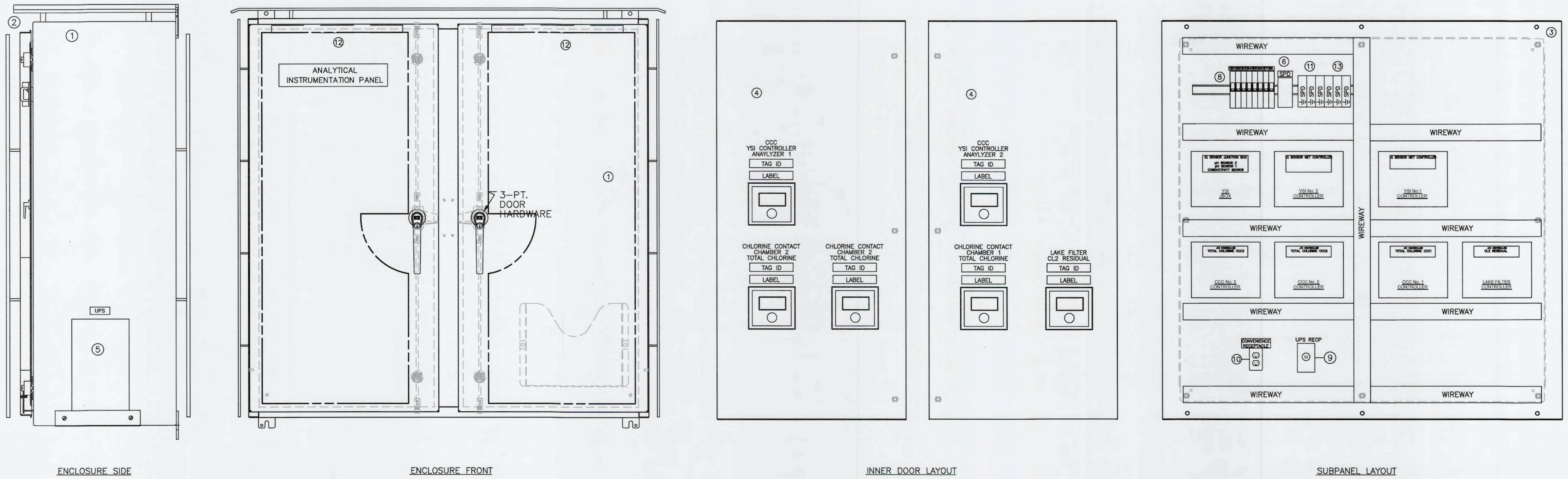

CCC ANALYZER PANEL (AP-60010)

NOT TO SCALE

NOTES:

1. ENCLOSURE, NEMA 4X, STAINLESS STEEL 316 WITH WHITE POWDER EPOXY COATING, 48"H x 48"W X 16"D APPROXIMATE.
2. SUN SHIELDS (TYPICAL) – STAINLESS STEEL 316 WITH WHITE POWDER EPOXY COATING
3. ENCLOSURE SUBPANEL, STEEL, PAINTED WHITE
4. SWING OUT INNER DOOR FOR INSTRUMENTATION DISPLAY
5. UNINTERRUPTABLE POWER SUPPLY (UPS)
6. AC LINE SURGE SUPPRESSOR
7. TERMINALS
8. CIRCUIT BREAKERS
9. UPS RECEPTACLE
10. 120VAC GFCI OUTLET
11. CAT6 SURGE ARRESTORS
12. LED LIGHT
13. 4–20 mA SURGE ARRESTORS

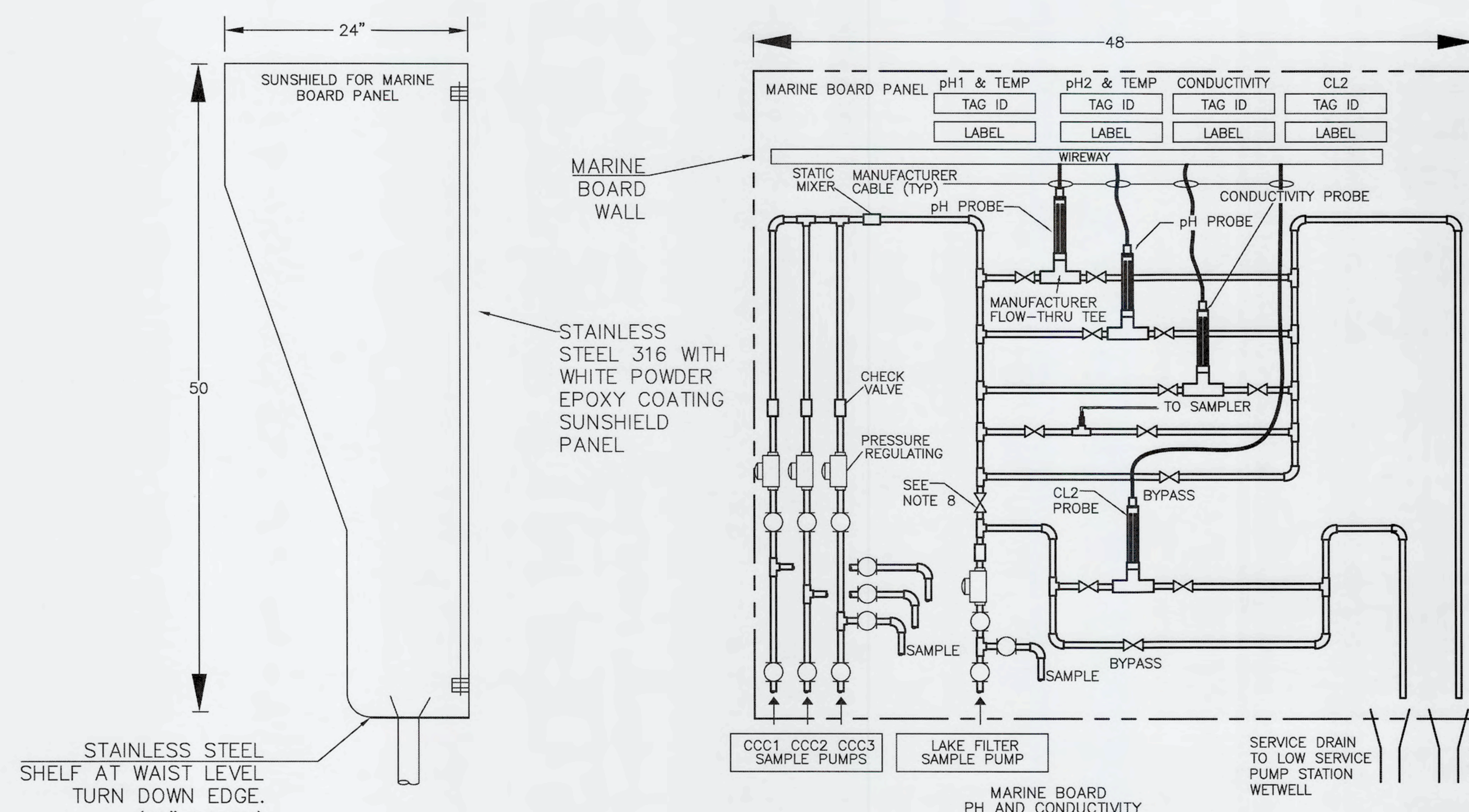

NOTES:

1. PROVIDE MARINE BOARD FOR INSTRUMENTATION MOUNTING DEVICES. APPROXIMATE DIMENSIONS OF 48"Hx48"W.
2. PROVIDE SUNSHIELD STANCHION MOUNT FOR THE INSTRUMENTATION. APPROXIMATE DIMENSIONS OF 50"Hx50"W.
3. ALL SUNSHIELD AND INSTRUMENT MOUNTING HARDWARE SHALL BE 316 STAINLESS STEEL WITH WHITE POWDER EPOXY.
4. SUNSHIELD SHALL BE 1/4 INCH THICK MINIMUM.
5. ALL EDGES SHALL BE ROUNDED AND BURR-FREE.
6. LAYOUTS INDICATED AS GENERAL INFORMATION ONLY.
7. SERVICE DRAIN SHALL BE SUFFICIENT FOR SENSOR FLOW AND SHELF SPILLAGE.
8. MANUAL VALVE TO USE WHEN LAKE FILTERS ARE NOT IN USE AND SAMPLE PUMP IS OFF.

CCC MARINE BOARD (MB-60010)

NOT TO SCALE

REV.NO.	DESCRIPTIONS	DATE

REVISIONS

MICHAEL D. TWEEDEL, LICENSE No. 60940, STATE OF FLORIDA, PROFESSIONAL ENGINEER
9-13-2019

MICHAEL TWEEDEL, P.E.
No. 60940

SEAL

McKIM&CREED
1365 Hamlet Avenue
Clearwater, Florida 33756
Phone: (727)442-7196, Fax: (727)461-3827
CA Lic. No. 29588
www.mckimcreed.com

Manatee County FLORIDA

SWWRF
CCC REHAB AND RECHARGE WELL PS PROJECT

INSTRUMENTATION AND PANEL DETAILS
ANALYZER PANEL

DATE:	SEPTEMBER, 2019
MCE PROJ. #	1024-0171
DRAWN	FEV
DESIGNED	FEV
CHECKED	MDT
PROJ. MGR.	TLP

STATUS: ISSUED FOR BID

SCALE
HORIZONTAL: N/A
VERTICAL: N/A

DRAWING NUMBER N/A

I-04

REVISION

\\mckimcreed.com\vosun\Data\fle_server_data\CLW\Projects\1024 – manatee co\0171\60-drawings\Instrumentation\XXX-1024-0171_100E.dwg, 9/13/2019 9:03:18 AM, Fiedo Velecio

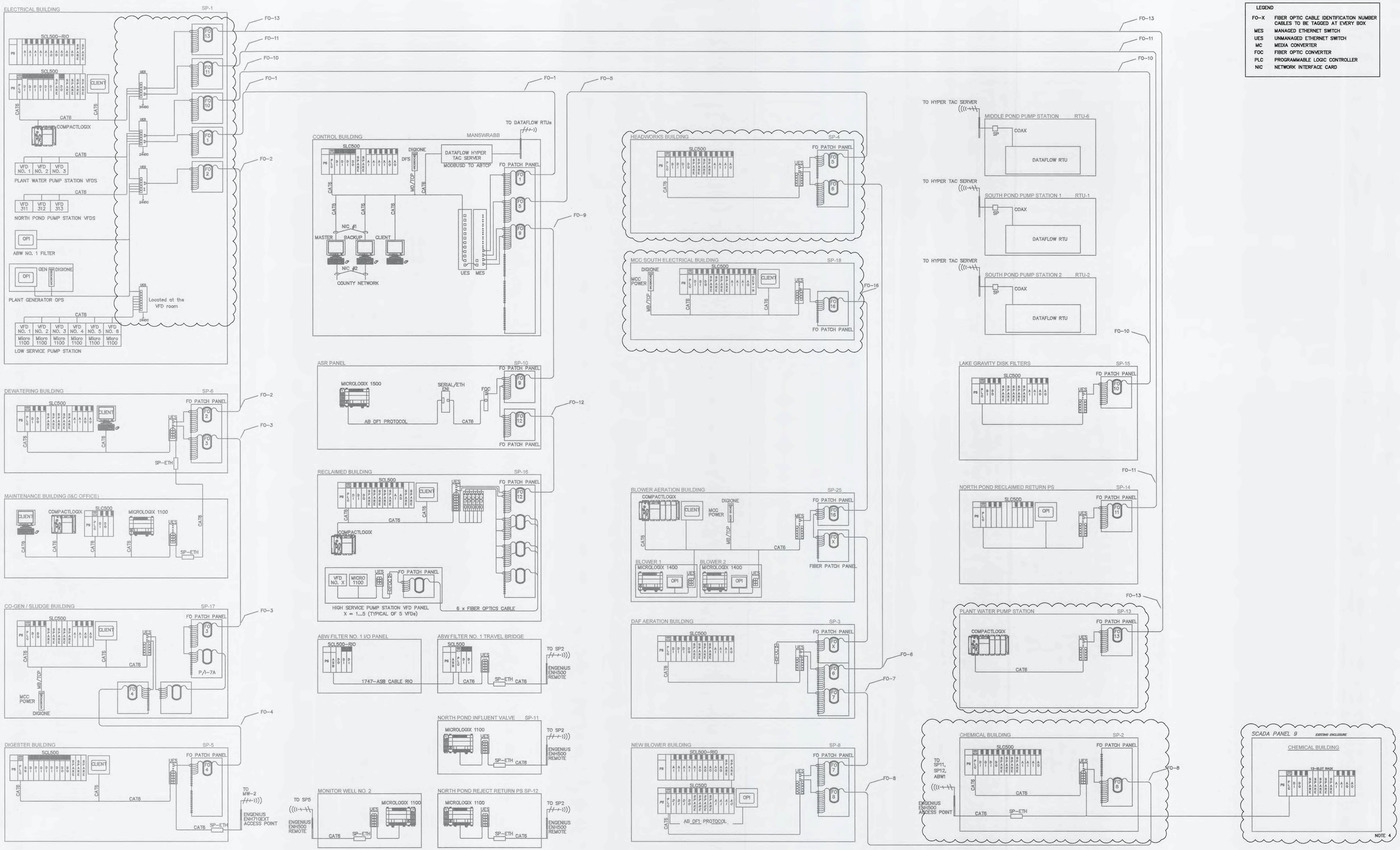

LEGEND

FO-X	FIBER OPTIC CABLE IDENTIFICATION NUMBER CABLES TO BE TAGGED AT EVERY BOX
MES	MANAGED ETHERNET SWITCH
UES	UNMANAGED ETHERNET SWITCH
MC	MEDIA CONVERTER
FOC	FIBER OPTIC CONVERTER
PLC	PROGRAMMABLE LOGIC CONTROLLER
NIC	NETWORK INTERFACE CARD

REV.NO.	DESCRIPTIONS	DATE
	REVISIONS	

MICHAEL D. TWEEDIE LICENSE No. 60940 STATE OF FLORIDA PROFESSIONAL ENGINEER
9-13-2019
MICHAEL D. TWEEDIE, P.E. No. 60940

SEAL

McKIM&CREED
1365 Hamlet Avenue
Clearwater, Florida 33756
Phone: (727)442-7196, Fax: (727)461-3827
CA Lic. No. 29588
www.mckimcreed.com

Manatee County FLORIDA

SWWRF CCC REHAB AND RECHARGE WELL PS PROJECT

NETWORK LAYOUT EXISTING

DATE:	SEPTEMBER, 2019
MCE PROJ. #	1024-0171
DRAWN	FEV
DESIGNED	FEV
CHECKED	MDT
PROJ. MGR.	TLP

SCALE
HORIZONTAL: N/A
VERTICAL: N/A

DRAWING NUMBER
N/A
I-05

STATUS: ISSUED FOR BID
REVISION

\\mckimcreed.com\sites\Data\fm_server_data\GLWF\Projects\1024 - manatee co\0171\05-drawings\instrumentation\XXX-1024-0171_1005.dwg, 9/13/2019 9:03:24 AM, Florio Velecela

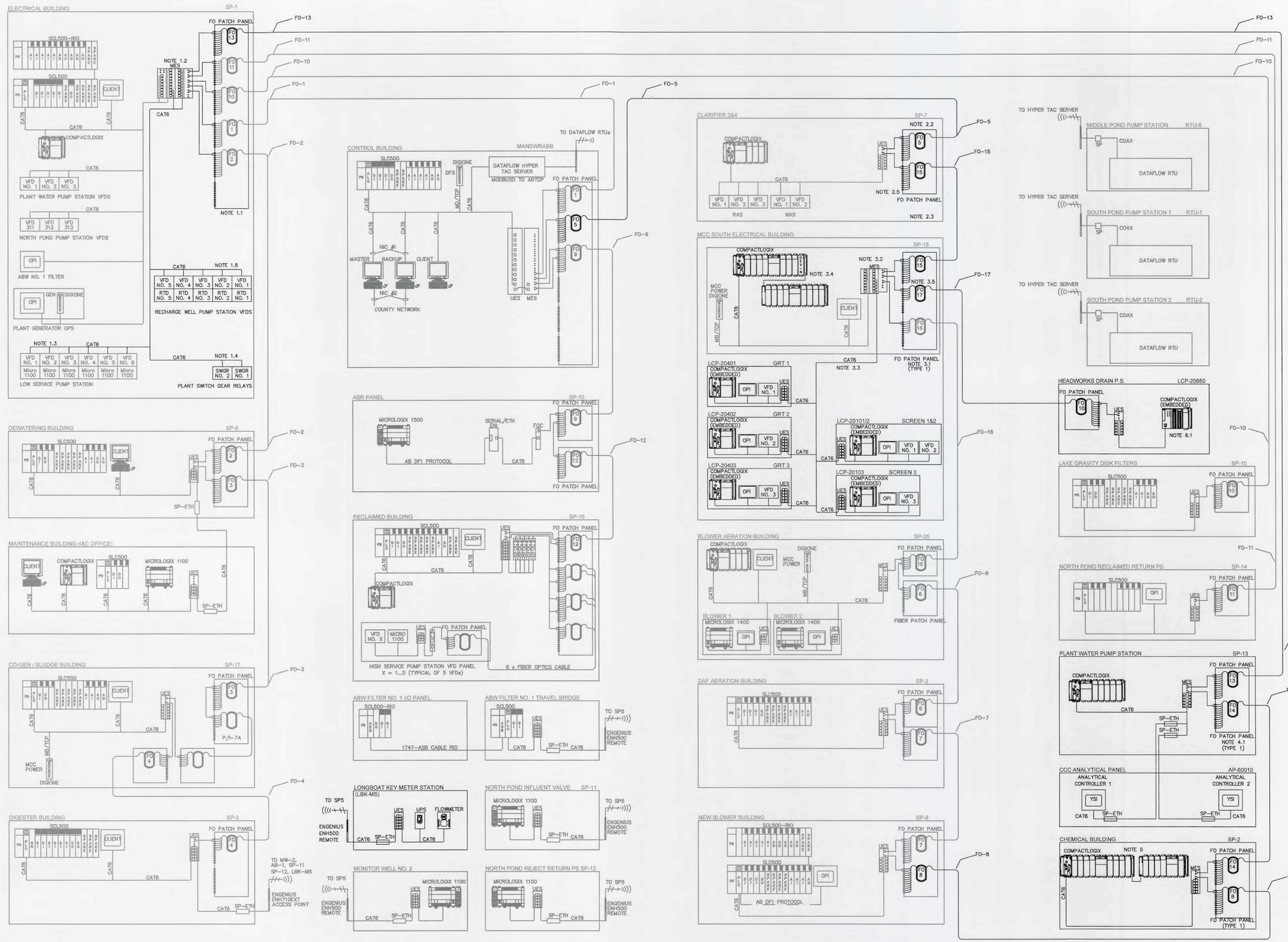

LEGEND	
FO-X	FIBER OPTIC CABLE IDENTIFICATION NUMBER CABLES TO BE TAGGED AT EVERY BOX
MES	MANAGED ETHERNET SWITCH
UES	UNMANAGED ETHERNET SWITCH
MC	MEDIA CONVERTER
FOC	FIBER OPTIC CONVERTER
PLC	PROGRAMMABLE LOGIC CONTROLLER
NIC	NETWORK INTERFACE CARD

NOTES:

1. SP-1 (HEADWORKS):
   - 1.1 PROVIDE AND INSTALL (1) NEW ENCLOSURE WITH 72-STRAND FIBER OPTIC PATCH PANEL OUTSIDE OF SP-1 PANEL. RE-ROUTE EXISTING FIBER CABLES TO NEW PATCH PANEL. LABEL ALL CABLES AND TERMINATE ALL STRANDS. PROVIDE AND INSTALL NEW PATCH CORDS FROM PATCH PANEL TO SP-1 NETWORK SWITCH. COORDINATE LABELS AND LOCATION WITH OWNER.
   - 1.2 PROVIDE AND INSTALL ONE (1) ALLEN BRADLEY STRATIX 5700 20-PORT MANAGED ETHERNET SWITCH. PROVIDE SIX (6) 100M MULTIMODE FIBER SFP MODULES FOR CONNECTION TO SCADA FIBER OPTICS NETWORK. PROVIDE AND INSTALL TWO (2) ALLEN BRADLEY STRATIX 5700 10-PORT MANAGED ETHERNET SWITCH. SEE SPECIFICATIONS FOR MODEL AND REQUIREMENTS.
   - 1.3 PROVIDE AND INSTALL NEW CONDUIT AND CAT. 6 NETWORK CABLES TO PROVIDE DIRECT CONNECTIONS BETWEEN THE ELECTRICAL ROOM VFDS AND SP-1. DECOMMISSION THE EXISTING ELECTRICAL ROOM NETWORK SWITCH AND CABINET AFTER TRANSFER OF ALL CONNECTIONS.
   - 1.4 PROVIDE AND INSTALL CONDUIT AND CAT. 6 NETWORK CABLES FROM THE NEW SWITCHGEAR MONITORING RELAYS TO THE NEW SP-1 NETWORK SWITCH.
   - 1.5 PROVIDE AND INSTALL CONDUIT AND CAT. 6 NETWORK CABLES FROM THE NEW RECHARGE WELL VFDs TO THE NEW SP-1 NETWORK SWITCH.
   - 1.6 PROVIDE NEW 24VDC DIGITAL INPUT CARD FOR THE ADDITIONAL SIGNALS LISTED ON THE I/O SCHEDULE. PROVIDE SURGE PROTECTION AND FIELD WIRE TERMINALS FOR NEW DISCRETE INPUTS.
2. SP-4 (HEADWORKS):
   - 2.1 DECOMMISSION SP-4 CONTROL PANEL AND REMOVE SCADA NETWORK FIBER OPTIC CABLE AS PART OF EXISTING HEADWORKS DEMOLITION.
   - 2.2 FOR THE ORIGINAL FIBER OPTICS CABLE RUN SP-4 TO CONTROL ROOM, REPLACE THE CONNECTION FROM THE CONTROL BUILDING WITH A NEW CONNECTION TO SP-7.
   - 2.3 DECOMMISSION ORIGINAL FIBER OPTICS CABLE RUN SP-4 TO SP-3.
   - 2.4 PROVIDE NEW CONNECTION FROM THE SOUTH ELECTRICAL BUILDING SP-18 TO SP-7.
   - 2.5 PROVIDE AND INSTALL (1) NEW 24 STRAND FIBER OPTIC PATCH PANEL FOR TERMINATION OF NEW AND EXISTING FIBER OPTIC CABLES. TERMINATE ALL FIBER STRANDS TO THE PATCH PANEL.
3. SP-18 (HEADWORKS):
   - 3.1 PROVIDE AND INSTALL (1) NEW 24 STRAND FIBER OPTIC PATCH PANEL FOR TERMINATION OF NEW AND EXISTING FIBER OPTIC CABLES. TERMINATE ALL FIBER STRANDS TO THE PATCH PANEL.
   - 3.2 PROVIDE AND INSTALL ONE (1) ALLEN BRADLEY STRATIX 5700 20-PORT MANAGED ETHERNET SWITCH. PROVIDE FOUR (4) 100M MULTIMODE FIBER SFP MODULES FOR CONNECTION TO SCADA FIBER OPTICS NETWORK. SEE SPECIFICATIONS FOR MODEL AND REQUIREMENTS.
   - 3.3 PROVIDE AND INSTALL CONDUIT AND CAT6 NETWORKING CABLE FROM THE NEW HEADWORKS EQUIPMENT CONTROL PANELS TO THE NEW SP-18 NETWORK SWITCH.
   - 3.4 REPLACE EXISTING SLC500 PROCESSOR, INPUTS AND OUTPUTS MODULES, AND DEVICE NETWORK CONNECTION WITH A NEW SP18 PROCESSOR, DIGITAL INPUT CARDS, DIGITAL OUTPUT CARDS, ANALOG INPUT CARDS, ANALOG OUTPUT CARDS, DEVICE NETWORK CARD AND ADDITIONAL HARDWARE. MODIFY EXISTING SP18 PANEL TO PROVIDE SPACE FOR NEW HARDWARE, ADDITIONAL POWER, DISCRETE AND ANALOG SURGE PROTECTIONS, TERMINALS, RELAYS AND CAT6 NETWORKING CABLE. WIRE ALL EXISTING AND NEW SIGNALS TO TERMINALS.
   - 3.5 PROVIDE AND INSTALL A NEW 6-STRAND FIBER OPTIC CABLE CONNECTION BETWEEN SP-18 AND NEW SP-19. TERMINATE ALL STRANDS AND CONNECT TO THE NEW FIBER OPTICS PATCH PANELS AT EACH END.
4. SP-13 (CCC/RWPS):
   - 4.1 PROVIDE AND INSTALL NEW SP-13 SCADA CONTROL PANEL. PROVIDE PLC MODULES TO ACCOMMODATE NEW AND EXISTING FIELD SIGNALS PER I/O SCHEDULE. COORDINATE DECOMMISSIONING, SIGNAL TRANSFERS AND COMMUNICATION CONVERSION WITH OWNER.
   - 4.2 PROVIDE AND INSTALL A NEW 12-STRAND FIBER OPTIC CABLE CONNECTION BETWEEN SP-1 AND NEW SP-13. TERMINATE ALL STRANDS AND CONNECT TO THE NEW FIBER OPTICS PATCH PANELS AT EACH END.
   - 4.3 PROVIDE AND INSTALL A NEW 12-STRAND FIBER OPTIC CABLE CONNECTION BETWEEN THE NEW SP-13 AND THE NEW SP-2. TERMINATE ALL STRANDS AND CONNECT TO THE NEW FIBER OPTICS PATCH PANEL AT EACH END.
   - 4.4 PROVIDE AND INSTALL CONDUIT, CAT. 6 NETWORKING CABLE AND SURGE PROTECTION DEVICES ON EACH END FROM THE NEW SP-13 TO EACH REDUNDANT ANALYTICAL CONTROLLER IN THE NEW CCC ANALYTICAL PANEL.
5. SP-2 (CCC/RWPS):
   - 5.1 PROVIDE AND INSTALL NEW SP-2 SCADA CONTROL PANEL. PROVIDE PLC MODULES TO ACCOMMODATE NEW AND EXISTING FIELD SIGNALS PER I/O SCHEDULE. COORDINATE PROCESS CONTROL, SIGNAL TRANSFERS AND COMMUNICATION CONVERSIONS WITH THE OWNER.
   - 5.2 DECOMMISSION EXISTING SP-2 AND SP-9 AS PART OF DAF POLYMER BUILDING DEMOLITION.
   - 5.3 PROVIDE AND INSTALL A NEW 12-STRAND FIBER OPTICS CABLE CONNECTION BETWEEN THE NEW SP-2 AND SP-8. TERMINATE ALL STRANDS AND CONNECT TO THE FIBER OPTICS PATCH PANELS AT EACH END.
6. LCP-20850 (HEADWORKS DRAIN PS):
   - 6.1. PROVIDE AND INSTALL NEW LCP-20850 HEADWORKS DRAIN PS CONTROL PANEL. PROVIDE EMBEDDED I/O AND PLC MODULES TO ACCOMMODATE FIELD SIGNALS PER I/O SCHEDULE.
7. REVIEW NETWORK DIAGRAMS FOR ADDITIONAL COMMUNICATION ADDITIONS AND MODIFICATIONS.
8. COMMUNICATION SYSTEM MODIFICATIONS MUST MAINTAIN ACTIVE COMMUNICATIONS WITH SITE LOCATIONS. SUBMIT AND REVIEW TRANSITION PLANS AS PART OF ICS PROJECT PLAN. COORDINATE ALL TRANSFER AND OUTAGES WITH OWNER BEFORE PROCEEDING.

REV.NO.	DESCRIPTIONS	DATE
	REVISIONS	

MICHAEL D. TWEEDEL LICENSE No. 60940 STATE OF FLORIDA PROFESSIONAL ENGINEER
McKim & Creed 9-13-2019
MICHAEL TWEEDEL, P.E. No. 60940

SEAL

McKIM&CREED
1365 Hamlet Avenue
Clearwater, Florida 33756
Phone: (727)442-7196, Fax: (727)461-3827
CA Lic. No. 29588
www.mckimcreed.com

Manatee County FLORIDA

SWWRF CCC REHAB AND RECHARGE WELL PS PROJECT

NETWORK LAYOUT MODIFICATIONS

DATE:	SEPTEMBER, 2019
MCE PROJ. #	1024-0171
DRAWN	FEV
DESIGNED	FEV
CHECKED	MDT
PROJ. MGR.	TLP

SCALE
HORIZONTAL: N/A
VERTICAL: N/A

DRAWING NUMBER
N/A
I-06

STATUS: ISSUED FOR BID
REVISION

\\mckimcreed.com\pwain\Data\File_server_data\CLIENT\Projects\1024 - manatee co\0171\80-drawings\Instrumentation\000-1024-0171_I06.dwg, 9/13/2019 9:03:30 AM, Florida Velocity

SCADA
WRF CONTROL ROOM
ENET/FO
OA NO FLOW
60315-3
60314-3
60313-3
60312-3
60311-3
KQIR ETM

SCADA
ENET/FO
SP-13
ENET/FO
LOW SERVICE PUMP STATION
MIXER3
MIXER2
MIXER1
OA FAIL 60131C
OL RUN 60131C
OL REM 60131C
HS S/S 60131C
OA FAIL 60121C
OL RUN 60121C
OL REM 60121C
HS S/S 60121C
OA FAIL 60111C
OL RUN 60111C
OL REM 60111C
HS S/S 60111C
CCC COMBINED
TAH 60041
TAL 60041
TIR 60041 TEMP
AAH 60042
AAL 60042
AIR 60042 COND
AAH 60041
AAL 60041
AIR 60041 PH
CCC 3
AAH 60032
AAL 60032
AIR 60032 ORP
AAH 60031
AAL 60031
AIR 60031 NH4
CCC 2
AAH 60022
AAL 60022
AIR 60022 ORP
AAH 60021
AAL 60021
AIR 60021 NH4
CCC 1
AAH 60012
AAL 60012
AIR 60012 ORP
AAH 60011
AAL 60011
AIR 60011 NH4
CCC 3
AAH 60033
AAL 60033
AIR 60033 CL2
CCC 2
AAH 60023
AAL 60023
AIR 60023 CL2
CCC 1
AAH 60013
AAL 60013
AIR 60013 CL2
3DI 1DO
3DI 1DO
3DI 1DO
1AO
11AI
11AI
1AI
1AI
1AI
LCP-MX60131
OA FAIL 60131A
OL RUN 60131A
HS HOA 60131A
LCP-MX60121
OA FAIL 60121A
OL RUN 60121A
HS HOA 60121A
LCP-MX60111
OA FAIL 60111A
OL RUN 60111A
HS HOA 60111A
SPD 60043 ES
CS-60043
COMPOSITE SAMPLER
DRAIN
CONTINUE I-07
MB-60010
CHLORINE CONTACT CHAMBER MARINE BOARD
TO SHEET I-07
SM-60040
SAMPLE TYP.
AE 60042 COND
AE 60041A pH Temp
AE 60041B pH Temp
DRAIN
CONTINUE I-07
AP-60010
CHLORINE CONTACT CHAMBER ANALYTICAL PANEL
ENET/FO
ENET/FO
SPD 60010A
SPD 60010B
ANALYTICAL CONTROLLER 1
AIT 60035 AIT 60022 AIT 60012 AIT/TIR 60041B
AIT 60031 AIT 60021 AIT 60011 AIT/TIR 60041A AIT 60042
NH4_1
NH4_2
NH4_3
ORP_1
ORP_2
ORP_3
PH/TEMP_A
PH/TEMP_B
COND
NOTE 2
ANALYTICAL CONTROLLER 2
AIT 60035 AIT 60022 AIT 60012 AIT/TIR 60041B
AIT 60031 AIT 60021 AIT 60011 AIT/TIR 60041A AIT 60042
SPD 60033
SPD 60023
SPD 60013
AIT 60033 CL2
AIT 60023 CL2
AIT 60013 CL2

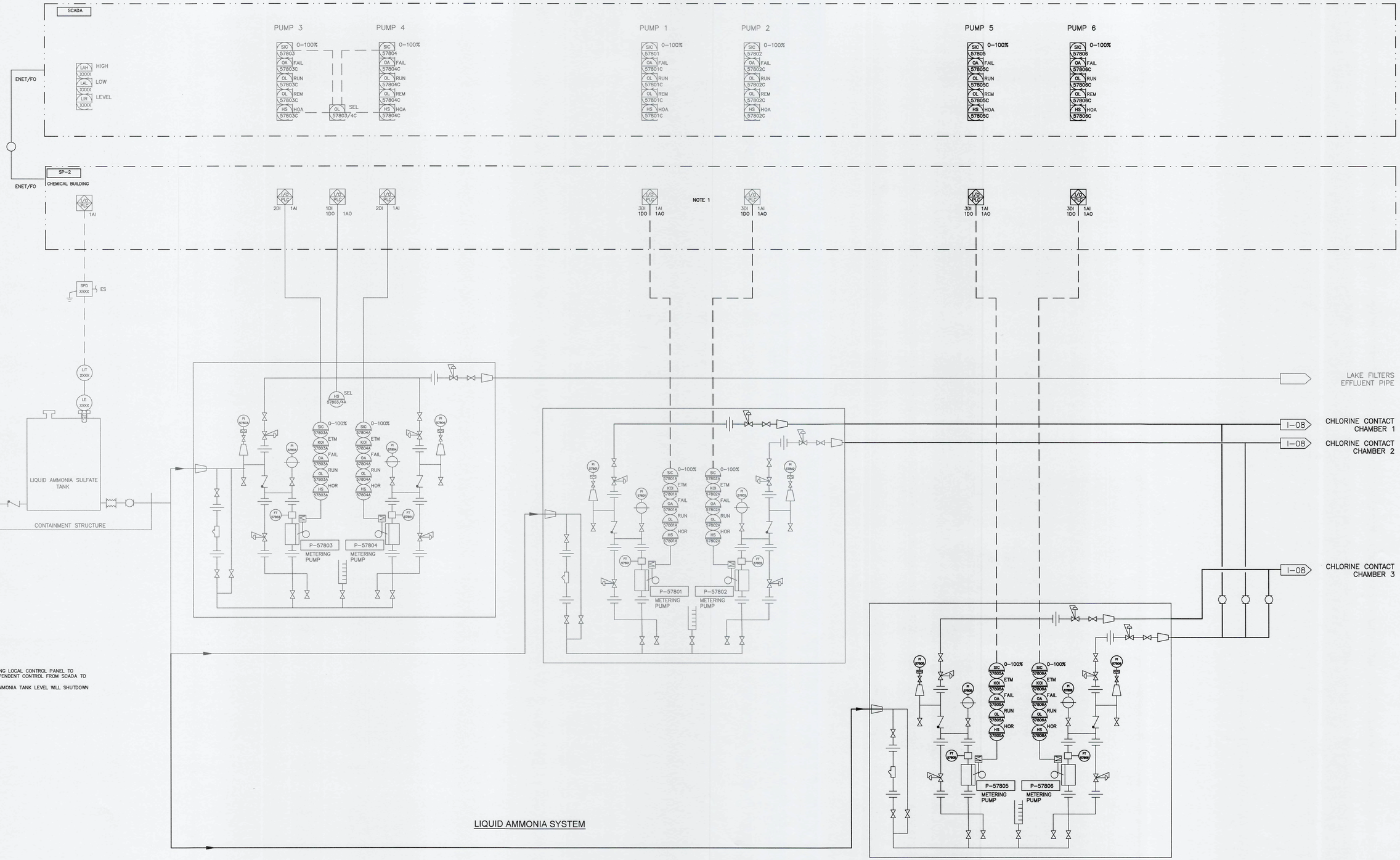

NOTES:
1. MODIFY EXISTING LOCAL CONTROL PANEL TO PROVIDE INDEPENDENT CONTROL FROM SCADA TO EACH PUMP.
2. LOW LIQUID AMMONIA TANK LEVEL WILL SHUTDOWN ALL PUMPS.

	[redacted]	SEAL		[redacted]	SWWRF	DATE: SEPTEMBER, 2019	SCALE
	[redacted]	SEAL		[redacted]	SWWRF	DATE: SEPTEMBER, 2019	SCALE
	[redacted]	SEAL		[redacted]	SWWRF	DATE: SEPTEMBER, 2019	SCALE

DRAWING NUMBER [redacted]

o:\CLWF\Proj_data\CLWF\Proj_data\CLWF\Projects\1024 - masotec co\017\60-drawings\Instrumentation\0003-1024-0171_1005.dwg, 9/13/2019 8:33:43 AM, Florio Velasco