# Choosing a Partner for your Project

When planning your migration, there are several resources available to help you develop a proactive lifecycle plan:

## Migration Services from Rockwell Automation

Reduce lifecycle risks before, during and after the migration process with migration services that are tailored to your specific needs. Our modernization services and support are available to help you realize the benefits of CompactLogix System and a modern control architecture. Our factory-trained Field Service Professionals are experienced and prepared to provide onsite assessments, migration planning services, start-up and commissioning of your modernized control architecture. From project management to start-up, we will help define and implement an effective modernization strategy for your facility that goes beyond simply addressing your legacy equipment to truly optimizing your operation.

## Recognized System Integrator or Solution Provider

Our **PartnerNetwork**™ provides an integrated team of engineering specialists and suppliers that are leaders in the automation and manufacturing industry who have experience delivering products or services that are designed to work with Rockwell Automation® solutions.

## Do It Yourself

If you prefer to migrate from SLC-based control system and 1746 I/O to CompactLogix system without assistance, Rockwell Automation provides a number of tools free of charge to help you plan and migrate with as little disruption as possible.

# Tools to Plan and Execute your Migration

Rockwell Automation provides migration tools for hardware selection, code conversion and hardware conversion that practically eliminate the need to modify any field device wiring. All tools are available regardless of who performs the migration: Rockwell Automation, System Integrator, or Do It Yourself

## Product Lifecycle Status

The online Product Lifecycle Status tool can help you determine the lifecycle of your existing equipment and identify the most contemporary Rockwell Automation products, bringing you advancements in performance, flexibility and security. Having this knowledge makes it easier to plan and manage the transition from legacy or obsolete equipment to leading-edge technologies.

## Installed Base Evaluation

An Installed Base Evaluation provides a thorough analysis of your critical plant assets and their condition. This site-delivered service provides detailed reports by site, area, line, machine and panel.

## Integrated Architecture Builder

The Integrated Architecture Builder (IAB) is a graphical, user-friendly software tool that allows you to automatically define and configure a contemporary CompactLogix-based architecture including a detailed bill of materials based on your current SLC-based control system.

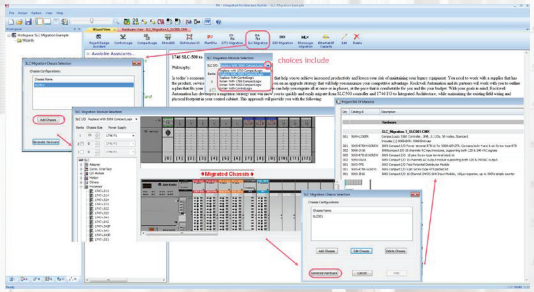

## Popular Configuration Drawings for CompactLogix 5380

Use these system configuration the following system drawings as examples of how to build a scalable integrated architecture for your industrial application and understand the basic performance, capacity, and configurations the controllers can use.

## ProposalWorks Proposal Builder

This tool helps you create bill of materials, RFQs, and proposals for your automation projects directly from your computer. The tool has 1,500 wizards and an easy-to-use search capability to find the right products to meet your application requirements.

## RSLogix 5000 or Studio 5000 Project Migrator

The Project Migrator tool allows you to save time and engineering resources when converting your SLC 500 application code. After exporting your RSLogix 500 project file, you can use the using the embedded conversion utilities to import your code into RSLogix 5000 or Studio 5000 software.

## Network Adaptor Module

The 1747-AENTR Ethernet adaptor module enables communication and data transfer between a CompactLogix controller and remote 1746 I/O via ethernet communications. It can be used to upgrade an existing SLC™ system to a CompactLogix system. The advantages of using the 1747-AENTR module in a phased modernization include allowing the existing Remote I/O network to remain in place and allows the new application to be tested before switch over and to switch back to the old application in minutes.

## Controller and I/O Wiring Conversion Systems (Coming in 2019)

I/O Conversion Modules provide a fast and efficient method for converting from legacy I/O to contemporary I/O. The I/O conversion is accomplished without removing any field wires from the existing 1746 Swing Arm, virtually eliminating the risk of wiring errors. The existing 1746 Swing Arms fit directly onto the edge connector of the Conversion Modules.

# Getting Started

With industry knowledge and worldwide services support, Rockwell Automation will partner with you to ensure a smooth transition from your SLC controllers to the flexible, scalable Integrated Architecture.

## STEP 1

### Document your Current System Layout and Define your Future System Requirements

Begin planning your migration by documenting your existing system as a reference point. This will enable you to consider the available options and find a solution that best meets your existing and future requirements.

*Tools: Installed Base Evaluation*

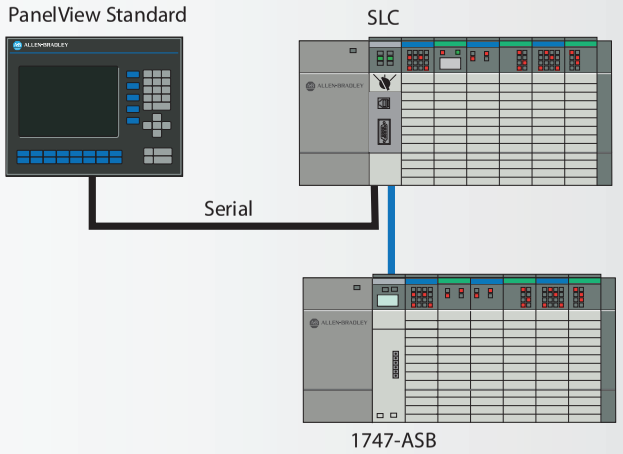


## STEP 2

### Plan your Migration

Once you have planned your overall migration approach, let Integrated Architecture Builder (IAB) help plan the details. The SLC migration wizard embedded in IAB will step you through the system configuration process, allowing to you make the decisions on which components you prefer to keep and reuse and which components you prefer to replace. If you choose to reuse the SLC I/O, IAB will verify module support and power supply loading and help you layout the new EtherNet/IP network.

*Tools: Integrated Architecture Builder (IAB), Popular Configuration Drawings*

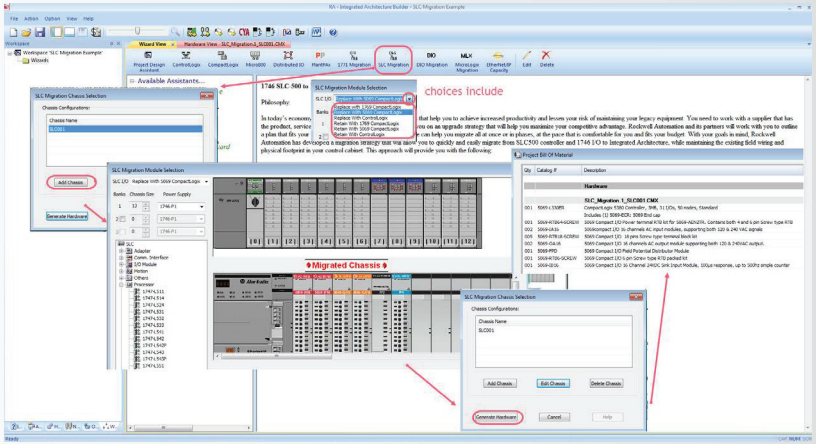

# Moving Forward: Executing Your Project

Whether you choose to migrate all at once or in phases, we have the tools and experience to guide you through the transition. Our approach to modular automation coupled with backward compatibility allows you to maintain productivity as you upgrade portions of your automation system. Migrate in phases at a pace that's right for you.

## PHASE 1

### Application Code Conversion

Save time and engineering resources when converting your SLC 500 application code by using the embedded conversion utilities in either RSLogix 5000 or Studio 5000 software. And, converting your PanelView Standard project to PanelView Plus is as simple as importing the existing project into FactoryTalk View Studio.

*Tools: RSLogix 5000 and Studio 5000 software, FactoryTalk View Studio Software*

**Benefits (application code):**
- Convert 80-100% of code using automated code conversion
- Take advantage of powerful constructs and features that you can leverage to improve the application

**Benefits (HMI application):**
- 80% of the time no further modification is required for HMI application
- Utility generates conversion log identifying features not supported by new hardware selected
- Option to take advantage of enhanced features and graphics
- Better integration with controllers

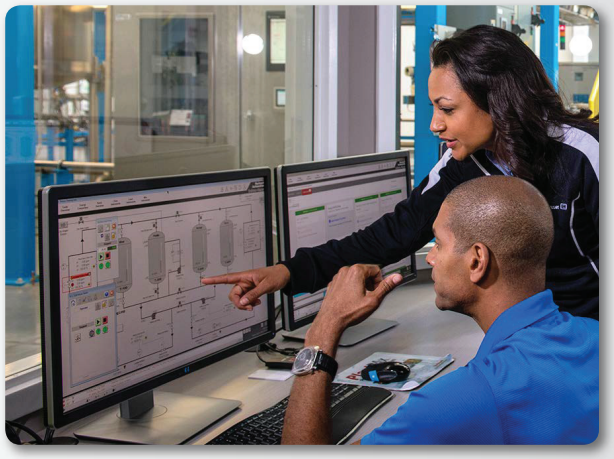

## PHASE 2

### Replace the SLC Processor and/or Adaptor Modules

Mount and wire the CompactLogix™ system and replace the SLC first slot modules (SLC processor or communication adaptor module) with the SLC Ethernet adaptor (1747-AENTR). Utilizing this module allows you to retain your existing SLC I/O and preserve existing field wiring, while allowing your SLC I/O chassis to be controlled from your new CompactLogix controller. This approach simplifies the migrations process, reduces risks associated with rewiring the I/O, and saves valuable time allowing you to quickly get your application into production.

*Tools: 1747-AENTR Ethernet adaptor, CompactLogix User Manual*

Benefits:
- Maintain existing field wiring
- Minimize commissioning time and effort
- Ability to return to SLC control, if needed

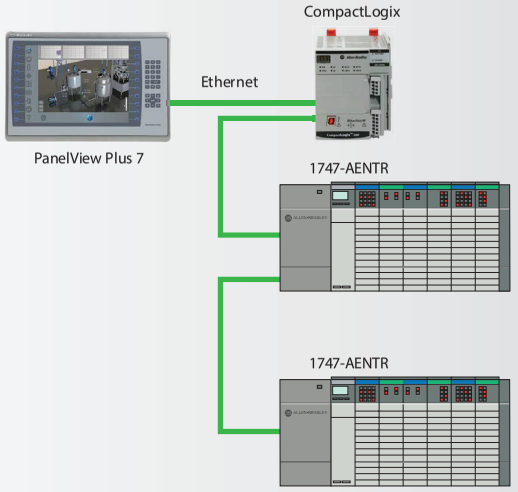

# Moving Forward: Executing Your Project

## PHASE 3

### Replace other System Components

Because Rockwell Automation is a comprehensive supplier, we can help with other products and services. If your control system has legacy or competitive variable speed drives, motion control, sensors or motor control centers we can discuss how we can help migrate those products as well. But it doesn't stop there. We have a worldwide service group that can do the migration work, assist and train operators or provide the maintenance services once it's complete. We can also review your network needs and review asset management for your entire facility.

*Tools: Popular Configuration Drawings for CompactLogix 5380*

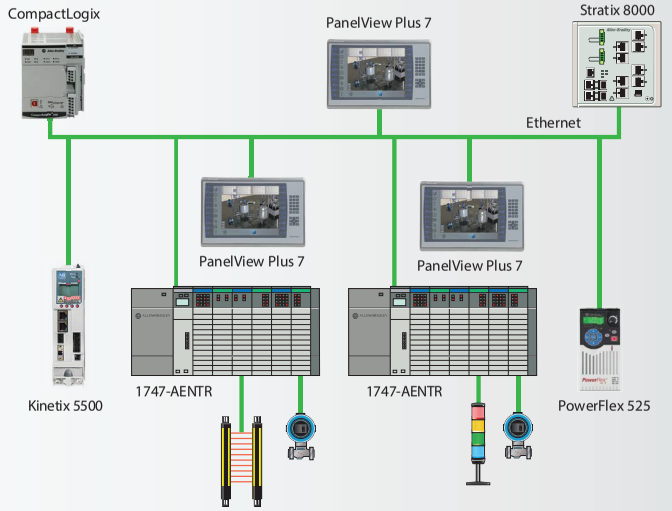


## PHASE 4

### I/O Replacement (FUTURE STATE)

In the final phase of the migration process, the I/O Wiring Conversion System is used to replace the 1746 I/O with the CompactLogix I/O. Because I/O replacement represents a large investment, we provide an approach that's right for your schedule and budget. The I/O Wiring Conversion System provides a method to connect the existing 1746 I/O wiring to the 5069 I/O modules without disturbing the field wiring connections, dramatically reducing labor time and eliminating the potential for downtime that could result from wiring mistakes during the migration. Planning your migration is more manageable as I/O can be swapped one rack at a time or all at once based on your schedule and budget. In either case, you can run both new and old I/O networks simultaneously. Additionally, I/O cross reference documentation assures correctness and provides historical back-up for future troubleshooting or diagnostics.

*Tools: I/O Wiring Conversion System (Coming in 2019), ProposalWorks Selection Software*

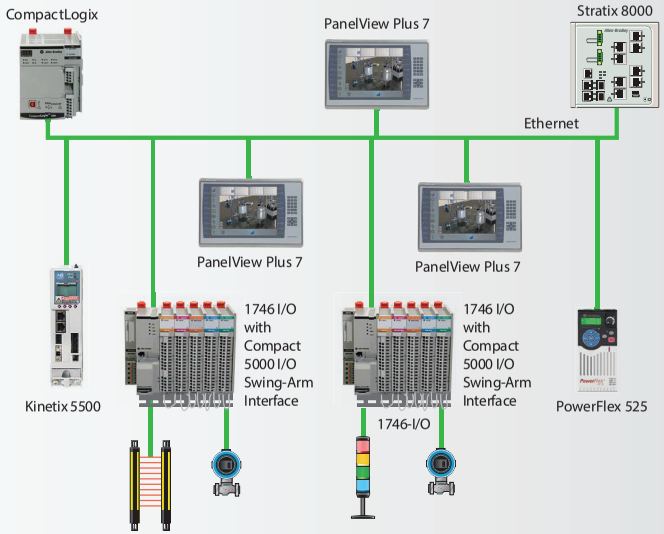

# Complete Conversion Services

In any phase of your conversion project, Rockwell Automation can provide you with technical, industry and project management expertise to help make a migration project easier. We will help you design a plan to account for your short- and long-term goals. You will be assigned a primary engineer who will be responsible for coordinating and scheduling implementation activities and resources, and who will also be the primary communications contact.

## On-site Assessment

Using standardized checklists and processes, a job site visit will be perfromed to confirm the project scope, validate risks, review testing and acceptance criteria, and gather the required information and software to convert existing screens and configurations.

**You will receive:**

- Completed risk assessment form
- Bill of materials
- Conversion acceptance criteria
- Project schedule and timeline
- Required information sent to conversion engineer team

**To request a migration quote, please contact your local authorized Allen-Bradley distributor or Rockwell Automation sales office.**

**If you need additional help, Rockwell Automation can provide:**
**Application level phone support** during the start-up and debugging phase of the project

**Consultation** on system re-engineering, operator interface, architecture and communication strategies, training, and on-site start-up is available through our local Rockwell Automation office.

## Application Conversion Engineering Services

Using custom-developed proprietary software applications designed to convert existing configurations, our engineers will complete and test the screen conversion process and any required PLC code changes necessary.

**We can help you:**

- Decrease turn-around time
- Save money
- Minimize errors that can occur in a manual conversion

**Deliverables include:**

- The existing console and configurations converted to the appropriate Logix controller and FactoryTalk products
- Conversion of the documentation database
- Correct and convert any instruction and/or addressing errors to the new processor family
- Multilingual database conversion offered

## Start-up and Acceptance

Prior to installation, comprehensive functional testing will be performed including pre-loading of all applicable software and firmware. Once installation is complete, our engineer, working closely with your plant staff, will conduct an operational compliance review. Comprehensive system documentation will be provided upon project acceptance.

**Deliverables include:**

- Pre-operational checklist
- Operational test performed and validated by customer
- Customer acceptance
- Necessary documentation, including product sheets and software files

Allen-Bradley, CompactLogix, RSLogix, SLC 500, and Studio 5000 are trademarks of Rockwell Automation, Inc. Trademarks not belonging to Rockwell Automation are property of their respective companies.

**www.rockwellautomation.com**

**Power, Control and Information Solutions Headquarters**

Americas: Rockwell Automation, 1201 South Second Street, Milwaukee, WI 53204-2496 USA, Tel: (1) 414.382.2000, Fax: (1) 414.382.4444
Europe/Middle East/Africa: Rockwell Automation NV, Pegasus Park, De Kleetlaan 12a, 1831 Diegem, Belgium, Tel: (32) 2 663 0600, Fax: (32) 2 663 0640
Asia Pacific: Rockwell Automation, Level 14, Core F, Cyberport 3, 100 Cyberport Road, Hong Kong, Tel: (852) 2887 4788, Fax: (852) 2508 1846

Publication MIGRAT-PP004B-EN-E – February 2019
Supersedes MIGRAT-PP004A-EN-E – September 2011

Copyright © 2019 Rockwell Automation, Inc. All Rights Reserved.

Appendix F

# HMI TOPOLOGY

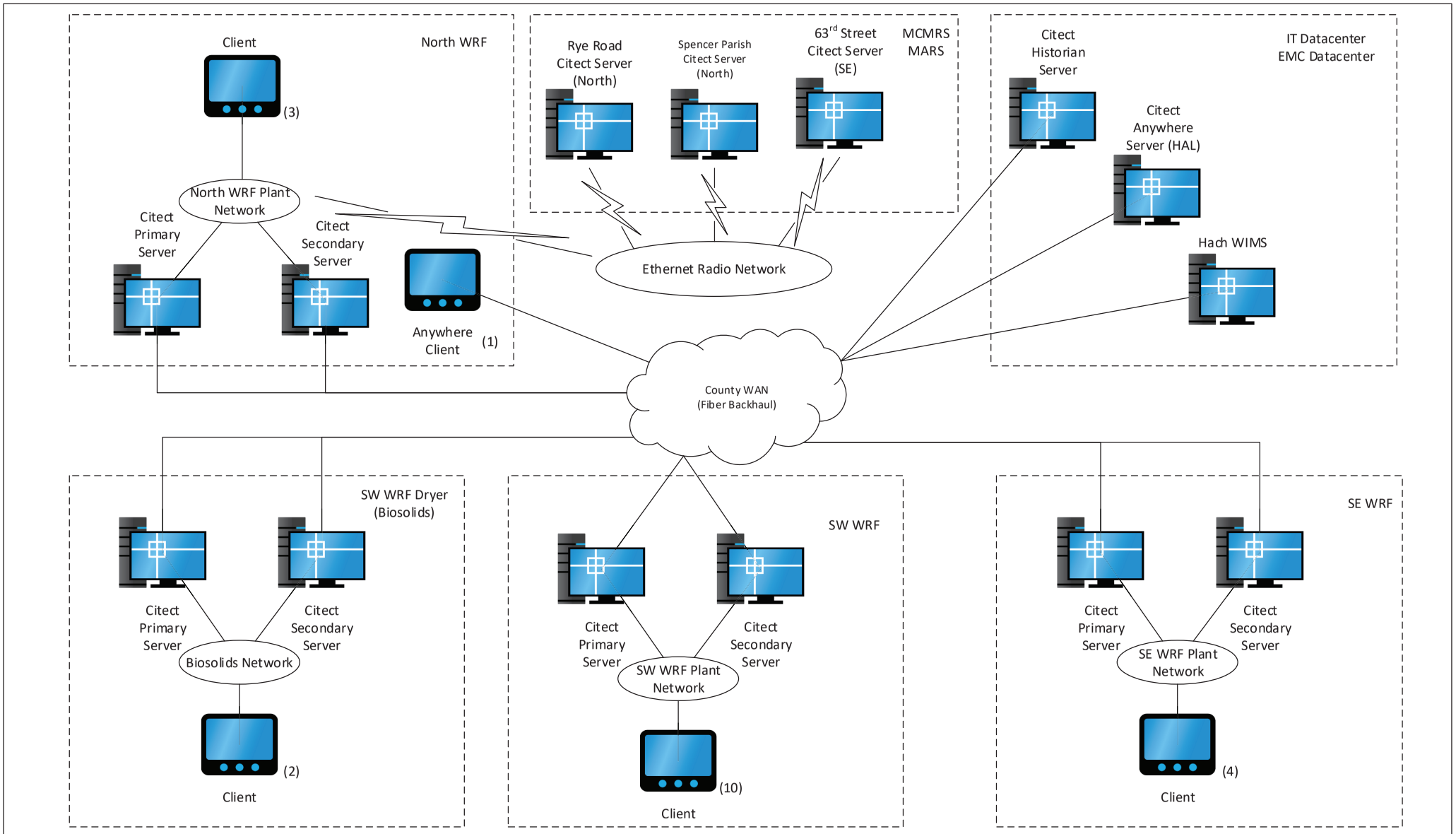


| | | | | |
|---|---|---|---|---|
| Manatee County FLORIDA | MANATEE COUNTY UTILITIES<br>4410 66TH ST W, BRADENTON, FL | | | |
| | SCADA SOFTWARE ARCHITECTURE OVERVIEW | | | |
| INSTRUMENTATION & CONTROL | | DATE<br>3/20/2019 | DWG NO<br>I-XX | REV<br>0 |
| DRAFT | SCALE: NTS | | SHEET 1 OF 2 | |

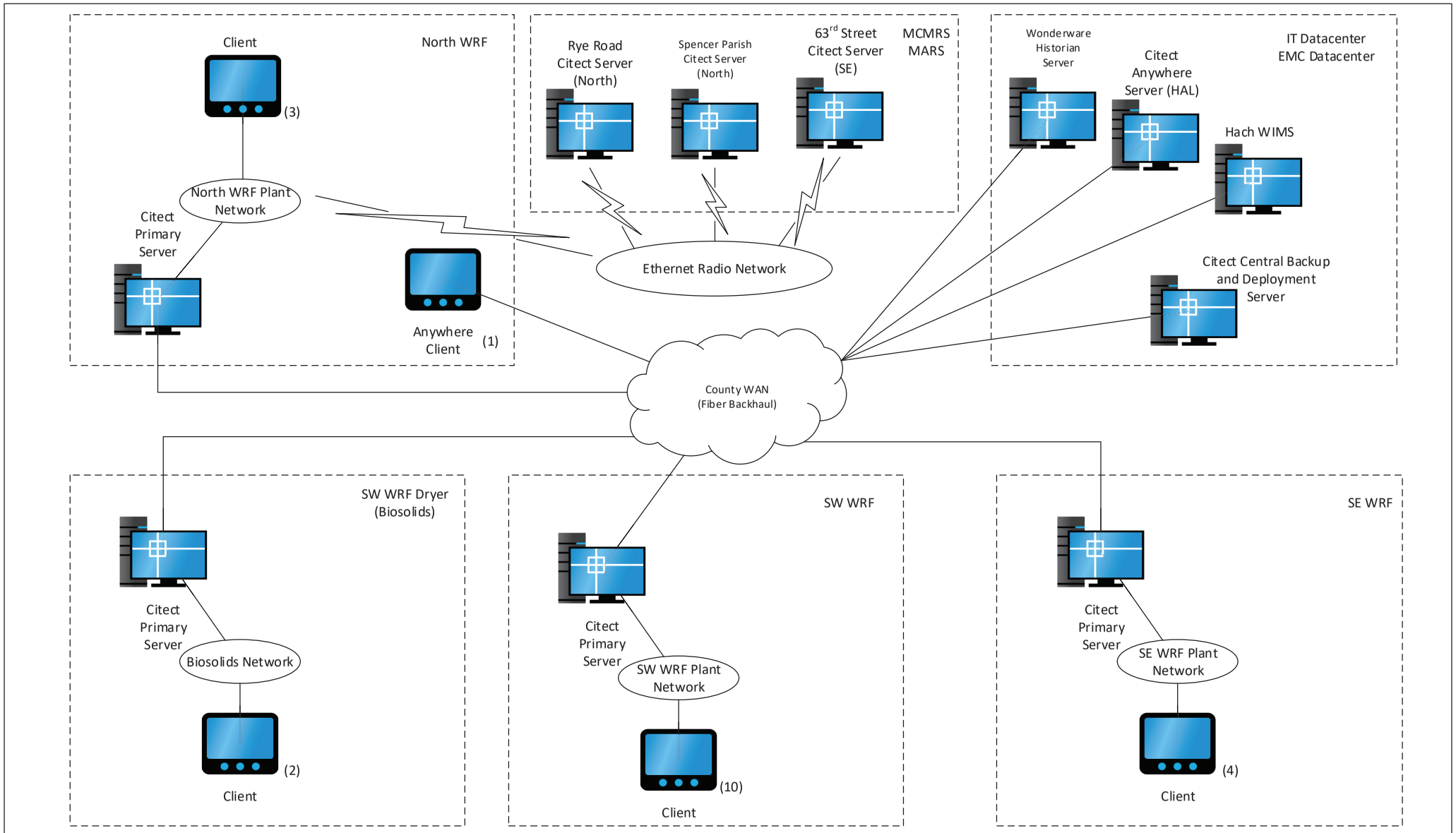


| | | | | |
|---|---|---|---|---|
| Manatee County FLORIDA | MANATEE COUNTY UTILITIES 4410 66TH ST W, BRADENTON, FL | | | |
| | CENTRAL BACKUP SERVER ARCHITECTURE | | | |
| INSTRUMENTATION & CONTROL | | DATE 3/20/2019 | DWG NO I-XX | REV 0 |
| DRAFT | SCALE: NTS | | SHEET 2 OF 2 | |

Appendix G

# SCADA ARCH

# MANATEE COUNTY
# SCADA SYSTEM DOCUMENTATION
# 9/12/2017

*DRAWING LISTING*

| DRAWING NUMBER | SHEET DESCRIPTION | REVISON DATE |
|---|---|---|
| | SOUTHWEST WRF SCADA SYSTEM ARCHITECTURE DRAWING | 9/1/2016 |
| | SOUTHWEST WRF TCP/IP ADDRESS LISTING | 9/1/2016 |
| | SOUTHWEST WRF PLC LISTING | 9/1/2016 |
| | SOUTHWEST WRF MISC. LISTING | 9/1/2016 |
| | SOUTHWEST PLC MESSAGE LISTING | 9/1/2016 |
| | SOUTWEST PLC DEVICE NET MESSAGES | 9/1/2016 |
| | SOUTHEAST WRF SCADA SYSTEM ARCHITECTURE DRAWINGS | 9/12/2017 |
| | SOUTHEAST WRF TCP/IP ADDRESS LISTING | 9/1/2016 |
| | SOUTHEAST WRF PLC LISTING | 9/1/2016 |
| | SOUTHEAST WRF MISC. LISTING | 9/1/2016 |
| | SOUTHEAST WRF PLC MESSAGE LISTING | 9/1/2016 |
| | SOUTHEAST WRF PLC DEVICENET MESSAGE | 9/1/2016 |
| | NORTH WRF SCADA SYSTEM ARCHITECTURE DRAWING | 9/1/2016 |
| | NORTH WRF TCP/IP ADDRESS AND PLC LISTING | 9/1/2016 |
| | NORTH WRF MISC. LISTING | 9/1/2016 |
| | NORTH WRF PLC MESSAGE LISTING | 9/1/2016 |
| | MCMRS SCADA SYSTEM ARCHITECTURE DRAWING | 9/1/2016 |
| | MCMRS TCP/IP ADDRESS AND PLC LISTING | 9/1/2016 |
| | MCMRS MISC. LISTING | 9/1/2016 |
| | SOUTHWEST WRF DRYER SCADA SYSTEM ARCHITECTURE DRAWING | 9/1/2016 |

| REV | DATE | BY | DESCRIPTION |
|---|---|---|---|

DESIGNED YOCUM
DRAWN YOCUM
CHECKED YOCUM
DATE SETP 2017

carollo®

Manatee County FLORIDA

MANATEE COUNTY
WRF SCADA EVALUATION
MANATEE COUNTY WRF
SCADA SYSTEM DOCUMENTATION

VERIFY SCALES
BAR IS ONE INCH ON ORIGINAL DRAWING
0 1"
IF NOT ONE INCH ON THIS SHEET, ADJUST SCALES ACCORDINGLY

JOB NO. 10096H.00
DRAWING NO.

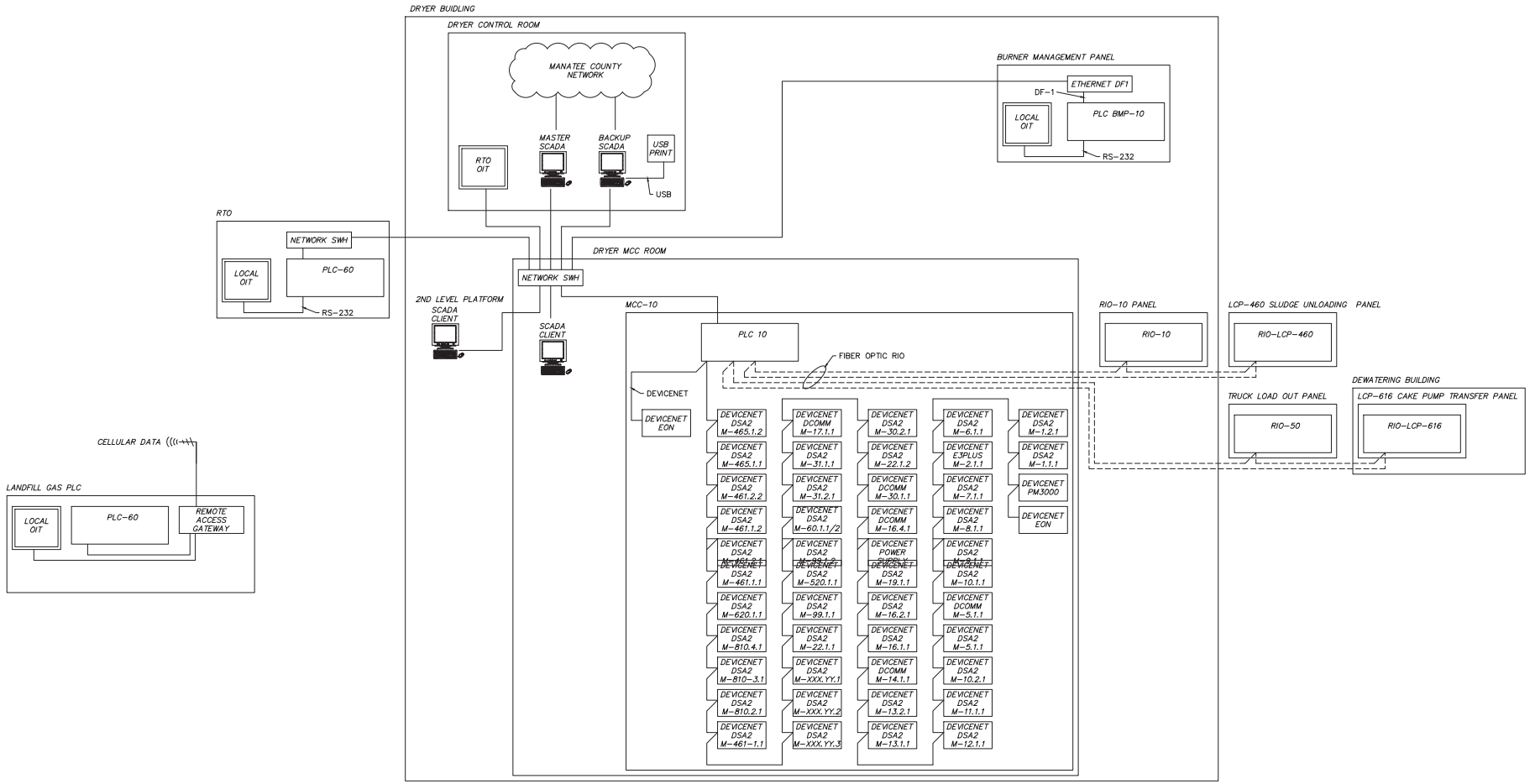


| REV | DATE | BY | DESCRIPTION |
|---|---|---|---|
| | | | |

DESIGNED YOCUM
DRAWN YOCUM
CHECKED YOCUM
DATE SEPTEMBER 2016

carollo

Manatee County FLORIDA

MANATEE COUNTY

WRF SCADA EVALUATION

SOUTHWEST WRF DRYER
SCADA SYSTEM ARCHITECTURE DRAWING

VERIFY SCALES
BAR IS ONE INCH ON ORIGINAL DRAWING
0 1"
IF NOT ONE INCH ON THIS SHEET, ADJUST SCALES ACCORDINGLY

JOB NO. 10096H.00

DRAWING NO.

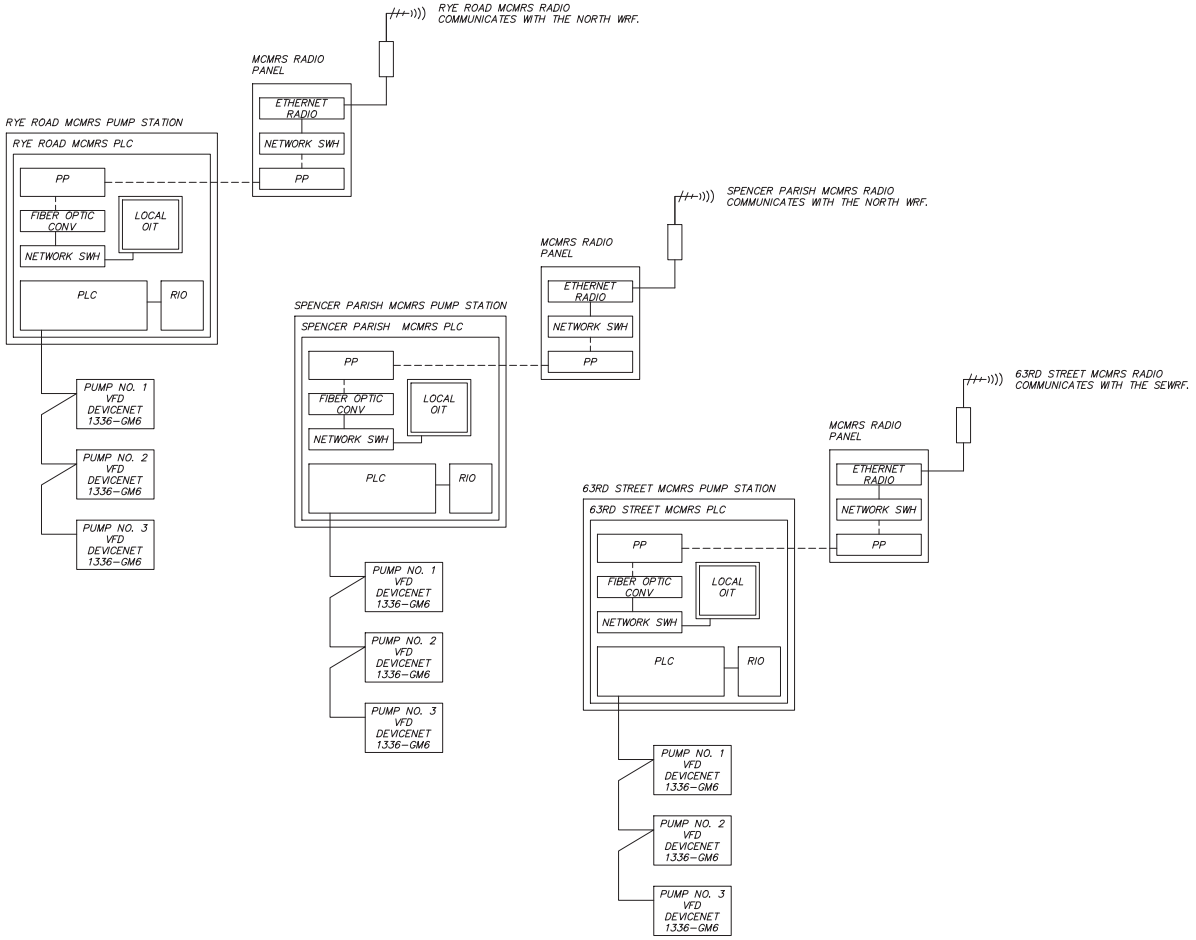


| REV | DATE | BY | DESCRIPTION |
|---|---|---|---|
| | | | |

DESIGNED YOCUM
DRAWN YOCUM
CHECKED YOCUM
DATE SEPTEMBER 2016

carollo

Manatee County FLORIDA

MANATEE COUNTY

WRF SCADA EVALUATION

MCMRS
SCADA SYSTEM ARCHITECTURE DRAWING

VERIFY SCALES
BAR IS ONE INCH ON ORIGINAL DRAWING
0 1"
IF NOT ONE INCH ON THIS SHEET, ADJUST SCALES ACCORDINGLY

JOB NO. 10096H.00

DRAWING NO.

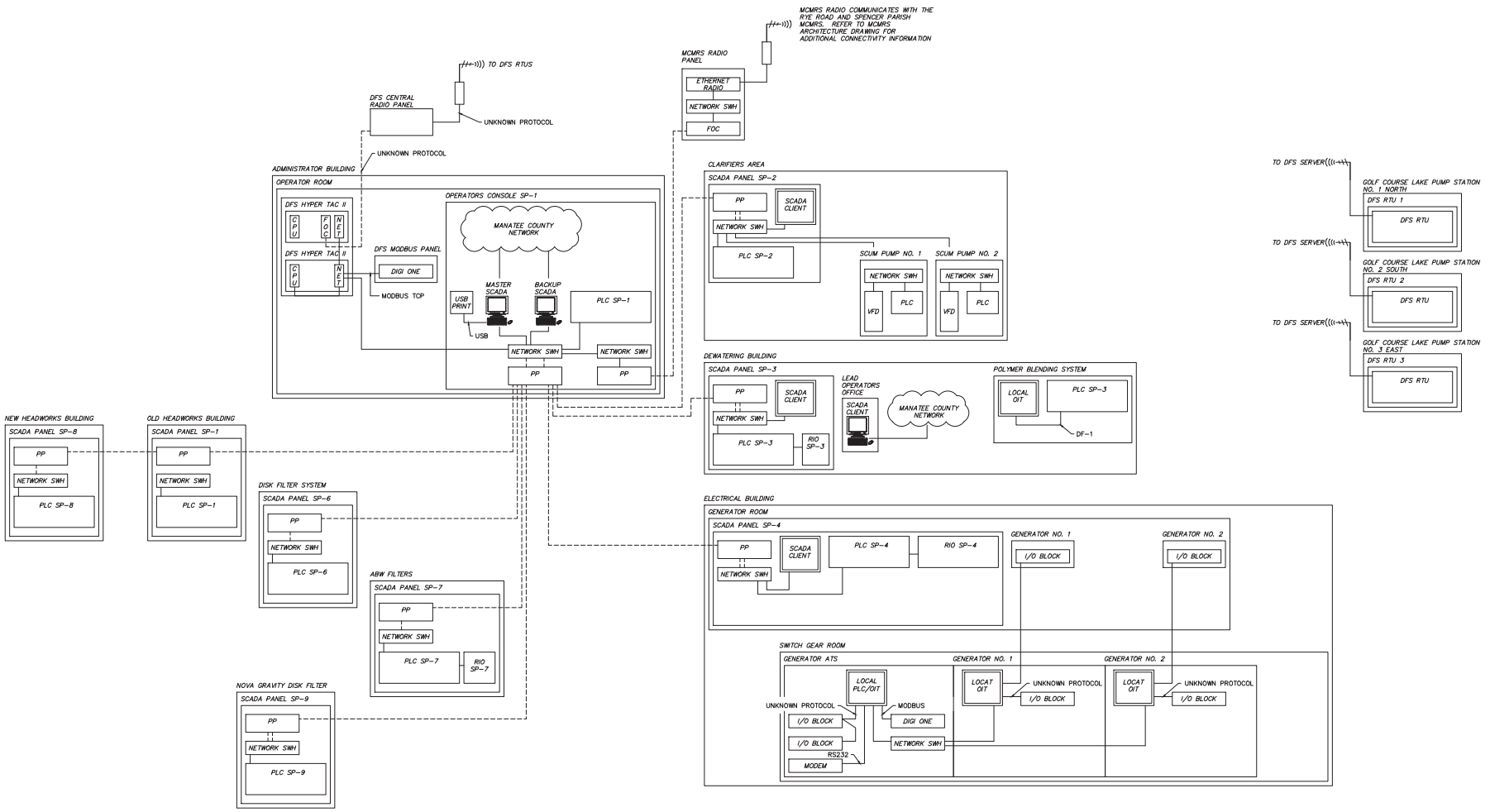


| REV | DATE | BY | DESCRIPTION |
|---|---|---|---|
| | | | |

DESIGNED YOCUM
DRAWN YOCUM
CHECKED YOCUM
DATE SEPTEMBER 2016

carollo

Manatee County FLORIDA

MANATEE COUNTY

WRF SCADA EVALUATION

NORTH WRF
SCADA SYSTEM ARCHITECTURE DRAWING

VERIFY SCALES
BAR IS ONE INCH ON ORIGINAL DRAWING
0 1"
IF NOT ONE INCH ON THIS SHEET, ADJUST SCALES ACCORDINGLY

JOB NO. 10096H.00
DRAWING NO.

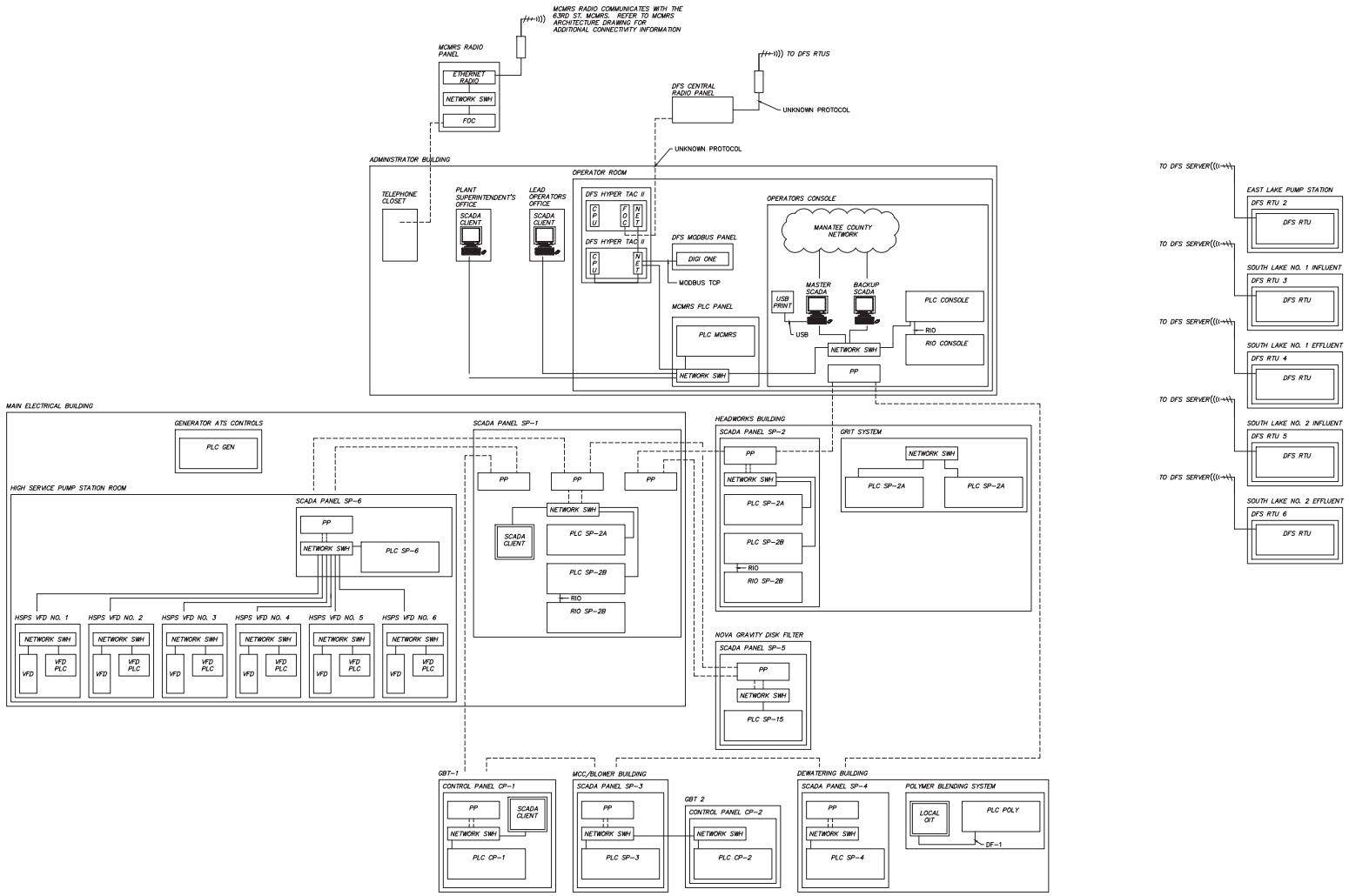


| REV | DATE | BY | DESCRIPTION |
|---|---|---|---|
| | | | |

DESIGNED YOCUM
DRAWN YOCUM
CHECKED YOCUM
DATE SEPTEMBER 2016

carollo

Manatee County FLORIDA

MANATEE COUNTY

WRF SCADA EVALUATION

SOUTHEAST WRF
SCADA SYSTEM ARCHITECTURE DRAWING

VERIFY SCALES
BAR IS ONE INCH ON ORIGINAL DRAWING
0 1"
IF NOT ONE INCH ON THIS SHEET, ADJUST SCALES ACCORDINGLY

JOB NO. 10096H.00
DRAWING NO.

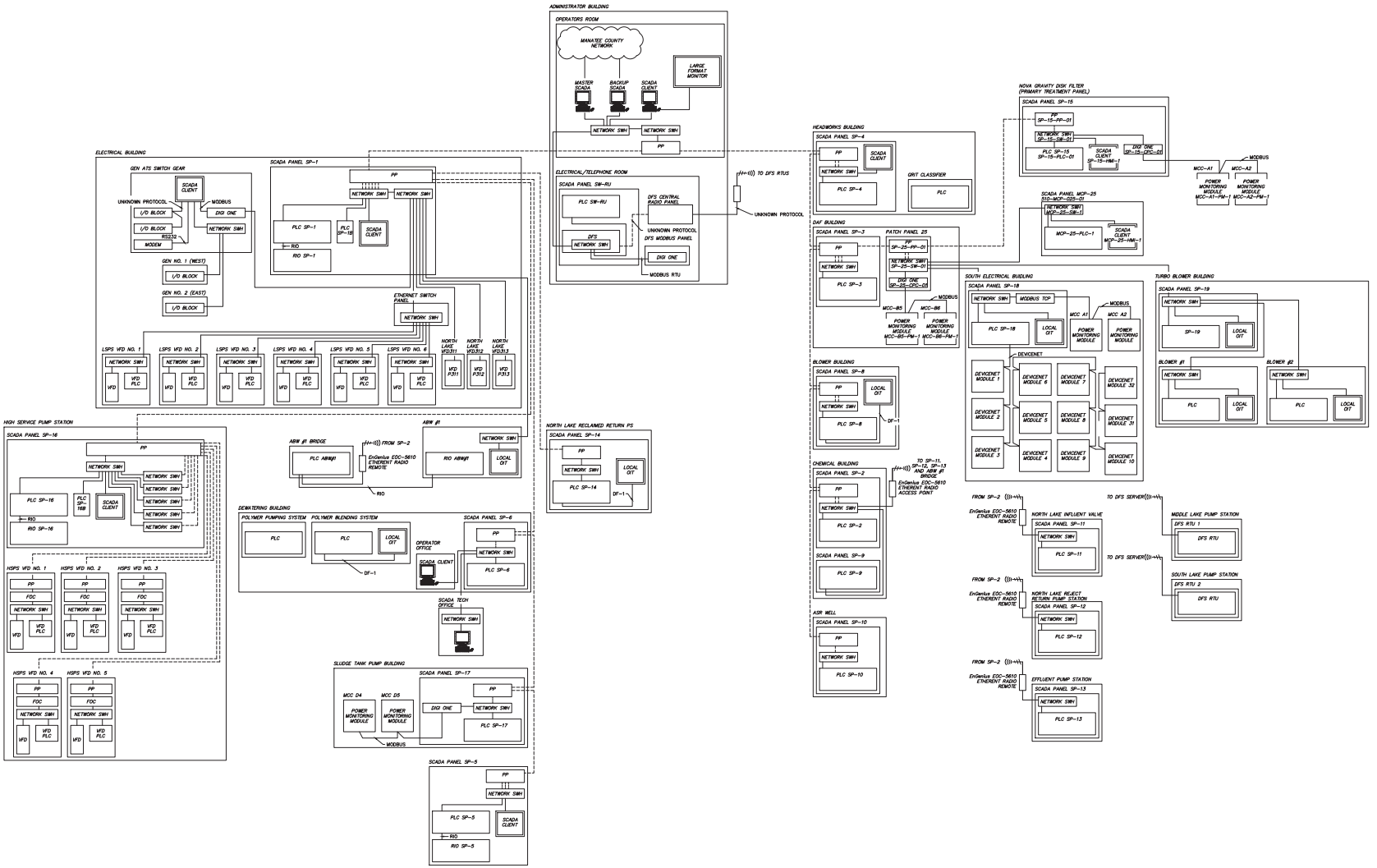


| REV | DATE | BY | DESCRIPTION |
|---|---|---|---|
| | | | |

DESIGNED YOCUM
DRAWN YOCUM
CHECKED YOCUM
DATE SETP 2017

carollo

Manatee County FLORIDA

MANATEE COUNTY

WRF SCADA EVALUATION

SOUTHWEST WRF
SCADA SYSTEM ARCHITECTURE DRAWING

VERIFY SCALES
BAR IS ONE INCH ON ORIGINAL DRAWING
0 1"
IF NOT ONE INCH ON THIS SHEET, ADJUST SCALES ACCORDINGLY

JOB NO. 10096H.00

DRAWING NO.

Appendix H

# FIBER OPTIC CABLE MODIFICATIONS

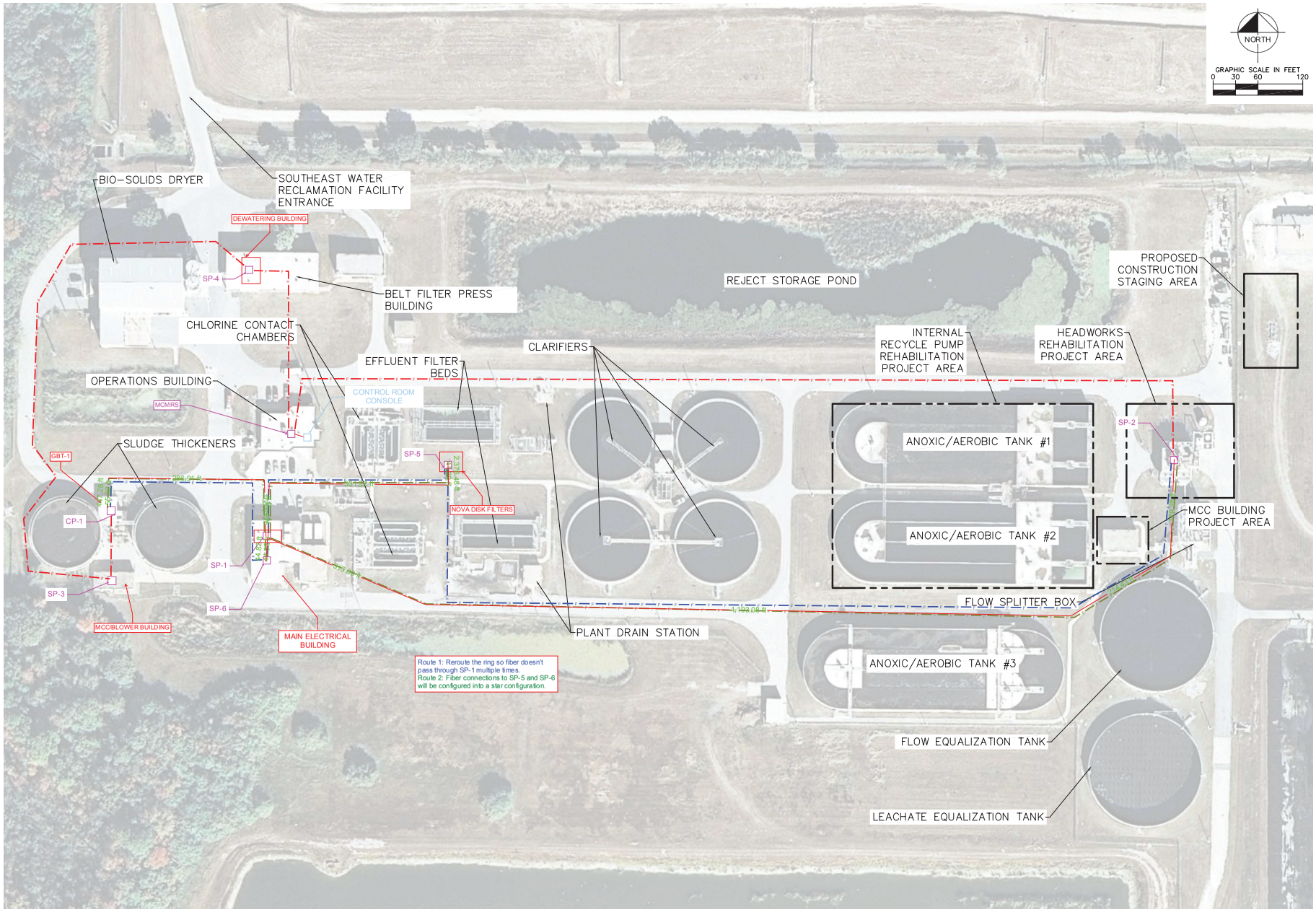


| NO. | REVISIONS | DATE | BY |
|---|---|---|---|
| | | | |

Kimley-Horn and Associates, Inc.
© 2013 KIMLEY-HORN AND ASSOCIATES, INC.
655 NORTH FRANKLIN STREET, SUITE 150, TAMPA, FL 33602
PHONE: 813-620-1460
WWW.KIMLEY-HORN.COM CA 00000696

DESIGN ENGINEER: WAYNE E. WHITE, P.E.
FLORIDA REGISTRATION NUMBER: 53232
DATE:

SCALE: AS NOTED
DESIGNED BY: JWW
DRAWN BY: JRT
CHECKED BY: WEW

# PROJECT LOCATION MAP

MANATEE COUNTY SEWRF
MANATEE COUNTY FLORIDA

DATE
DECEMBER 2013

PROJECT NO.
148400001

SHEET NUMBER
G-0.3

Drawing name: K:\TAM_Civil\148400 - Manatee County\001 - SEWRF Headworks Rehab\CADD\PlanSheets\G-03 PROJECT LOCATION MAP.dwg PROJECT LOCATION MAP Dec 02, 2013 5:02pm by: jordan.walker
This document, together with the concepts and designs presented herein, as an instrument of service, is intended only for the specific purpose and client for which it was prepared. Reuse of and improper reliance on this document without written authorization and adaptation by Kimley-Horn and Associates, Inc. shall be without liability to Kimley-Horn and Associates, Inc.

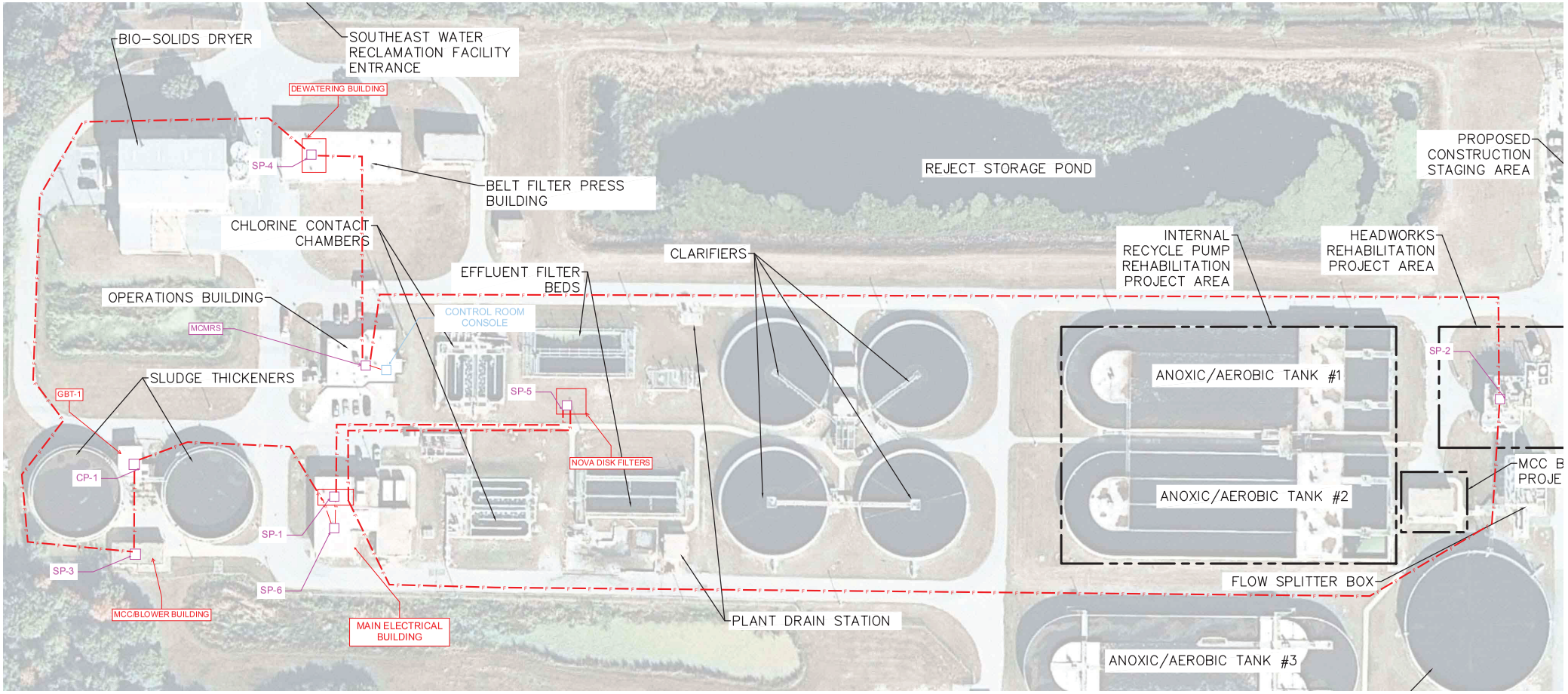
BIO-SOLIDS DRYER
SOUTHEAST WATER RECLAMATION FACILITY ENTRANCE
DEWATERING BUILDING
SP-4
BELT FILTER PRESS BUILDING
REJECT STORAGE POND
PROPOSED CONSTRUCTION STAGING AREA
CHLORINE CONTACT CHAMBERS
CLARIFIERS
INTERNAL RECYCLE PUMP REHABILITATION PROJECT AREA
HEADWORKS REHABILITATION PROJECT AREA
EFFLUENT FILTER BEDS
OPERATIONS BUILDING
CONTROL ROOM CONSOLE
MCMRS
SP-2
ANOXIC/AEROBIC TANK #1
SLUDGE THICKENERS
GBT-1
SP-5
NOVA DISK FILTERS
CP-1
ANOXIC/AEROBIC TANK #2
MCC B
PROJE
SP-1
SP-3
SP-6
FLOW SPLITTER BOX
MCC/BLOWER BUILDING
MAIN ELECTRICAL BUILDING
PLANT DRAIN STATION
ANOXIC/AEROBIC TANK #3

NOTES

1. PRIOR TO THE COMMENCEMENT OF ANY CONSTRUCTION OR DEMOLITION ACTIVITIES, ALL SOIL EROSION AND SEDIMENTATION CONTROL MEASURES SHALL BE IN PLACE AND REMAIN THROUGHOUT CONSTRUCTION.
2. CONTRACTOR SHALL FOLLOW BEST MANAGEMENT PRACTICES THROUGHOUT CONSTRUCTION.
3. CONTRACTOR SHALL PREPARE AND SUBMIT A STORM WATER POLLUTION PLAN (SWPPP) FOR REVIEW AND APPROVAL PRIOR TO COMMENCEMENT OF ANY CONSTRUCTION ACTIVITIES. APPROVAL DOES NOT OBSOLVE CONTRACTOR OF RESPONSIBILITY FOR THE IMPLEMENTATION AND COMPLIANCE OF THE SWPPP. THE CONTRACTOR SHALL BE RESPONSIBLE FOR OBTAINING PERMITS ASSOCIATED WITH THE SWPPP.
4. SEE DWG NO. C-0.2.2 FOR DETAILS.
5. CARE SHALL BE EXERCISED TO PREVENT DISTURBANCE TO THE NATURAL VEGETATION IN AREAS NOT PROPOSED FOR IMMEDIATE CONSTRUCTION.
6. AS SOON AS PRACTICAL, ALL DRESSED SLOPES AND DISTURBED AREAS SHALL BE SODDED OR SEEDED AND MULCHED TO PREVENT EROSION.
7. CONTRACTOR SHALL PREPARE AND SUBMIT A DEWATERING PLAN SHOWING APPLICABLE BEST MANAGEMENT PRACTICES FOR REVIEW AND APPROVAL BY THE OWNER PRIOR TO ANY DEWATERING ACTIVITIES. APPROVAL DOES NOT OBSOLVE CONTRACTOR OF RESPONSIBILITY FOR DEWATERING ACTIVITIES.
8. CONTRACTOR SHALL BE RESPONSIBLE FOR OBTAINING PERMITS ASSOCIATED WITH DEWATERING ACTIVITIES.
9. DEWATERING WATER SHALL BE FILTERED AND TREATED WITH SILTATION SUMP AND/OR FILTER SOCKS OR OTHER FDEP APPROVED METHOD PRIOR TO DISCHARGE ONTO THE GROUND IN A MANNER IN WHICH THE WATER DOES NOT LEAVE THE PREMESIS OR CAUSE A NUISANSE TO PLANT OPERATIONS.

| REV.NO. | DESCRIPTIONS | DATE |
|---|---|---|
| | REVISIONS | |

SEAL

DAVID C. WEHNER, P.E.
No. 59541

SEAL


McKIM&CREED
1365 Hamlet Avenue
Clearwater, Florida 33756
Phone: (727)442-7196, Fax: (727)461-3827
EB0006691
www.mckimcreed.com


MANATEE COUNTY, FLORIDA

NWRF EXPANSION PHASE 1

SOIL EROSION AND SEDIMENTATION CONTROL PLAN

| | |
|---|---|
| DATE: | JULY 2011 |
| MCE PROJ. # | 1024-0143 |
| DRAWN | BFN |
| DESIGNED | DCW |
| CHECKED | JSL |
| PROJ. MGR. | DCW |

SCALE
HORIZONTAL: 1" = 100'
VERTICAL: NA

DRAWING NUMBER
G-0.5

STATUS: ISSUED FOR BID
REVISION

S:\1024\0143\06-Drawings\General\G-0.5.dwg, 7/15/2011 8:01:02 AM, Brian Naught

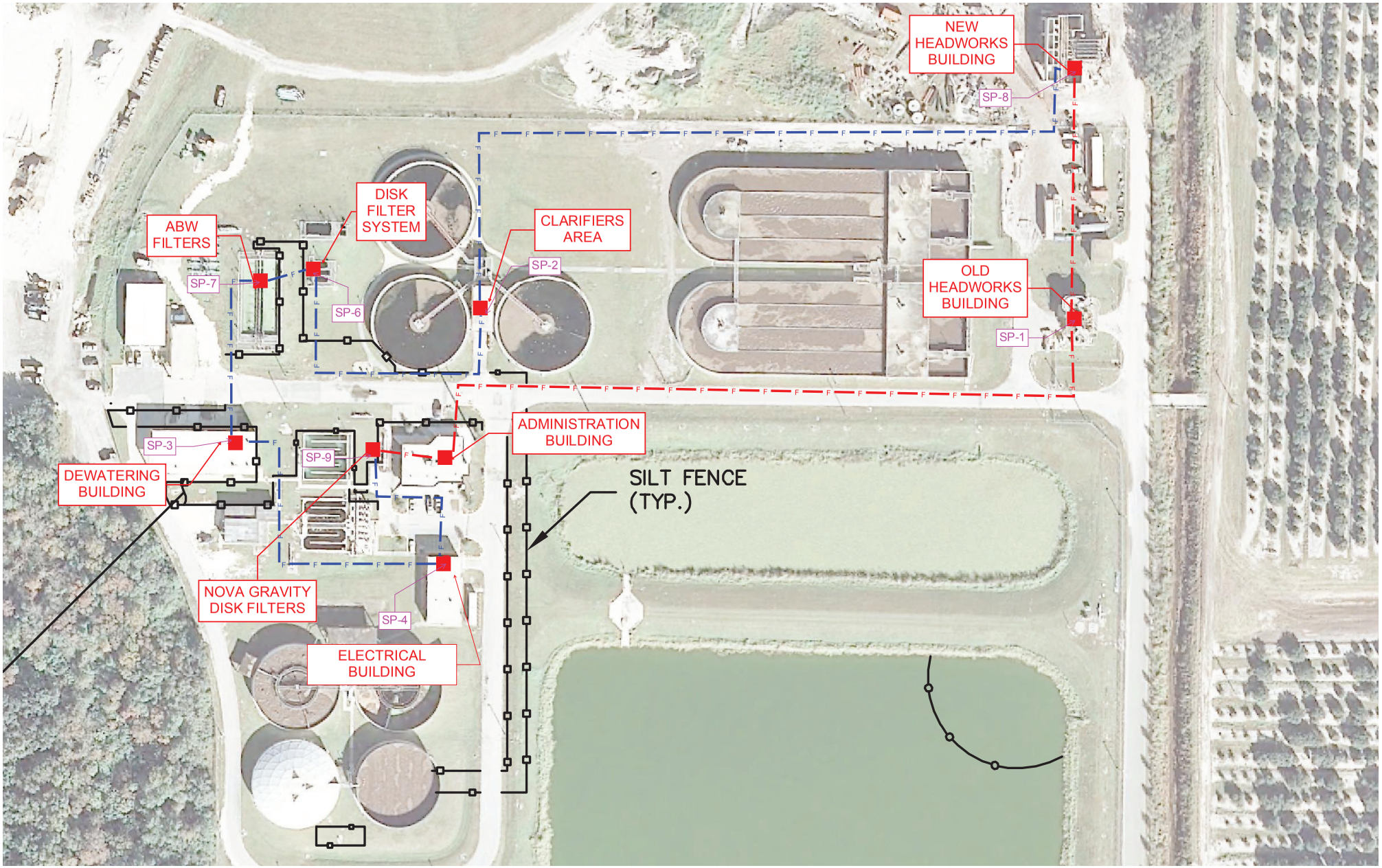
NEW HEADWORKS BUILDING
SP-8
DISK FILTER SYSTEM
ABW FILTERS
CLARIFIERS AREA
SP-2
SP-7
SP-6
OLD HEADWORKS BUILDING
SP-1
ADMINISTRATION BUILDING
SP-3
SP-9
DEWATERING BUILDING
SILT FENCE (TYP.)
NOVA GRAVITY DISK FILTERS
SP-4
ELECTRICAL BUILDING

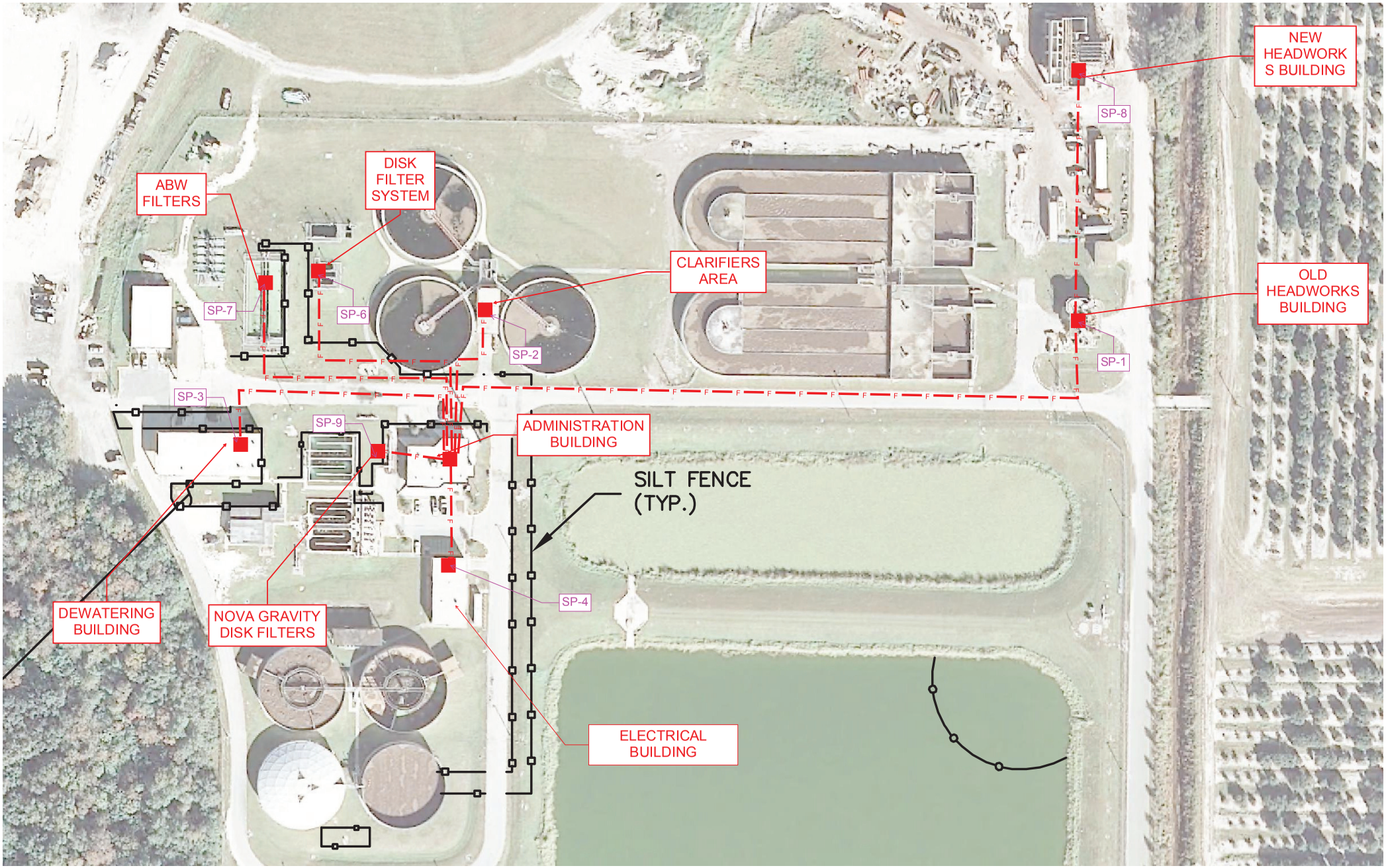
NEW HEADWORKS BUILDING
SP-8
ABW FILTERS
DISK FILTER SYSTEM
CLARIFIERS AREA
OLD HEADWORKS BUILDING
SP-7
SP-6
SP-2
SP-1
SP-3
SP-9
ADMINISTRATION BUILDING
SILT FENCE (TYP.)
SP-4
DEWATERING BUILDING
NOVA GRAVITY DISK FILTERS
ELECTRICAL BUILDING