INVITATION FOR BID
IFB 17-0817OV
MCAT 2017 Construction of Americans with Disabilities Act (ADA) Compliant Bus Stop Landing Pads, Walkways, Sidewalks, Shelter Pads and Bench Pads Project, Manatee County, FL

Manatee County, a political subdivision of the State of Florida, (hereinafter "County") will receive sealed bids from individuals, corporations, partnerships, and other legal entities organized under the laws of the State of Florida or authorized to conduct business in the State of Florida.

NON-MANDATORY INFORMATION CONFERENCE
In order to ensure that all prospective bidders have sufficient information and understanding of the County's needs, an **Information Conference** will be held at the Manatee County Administration Building on **May 31, 2017 at 2:00 PM**, **located at 1112 Manatee Avenue West, Suite 803, Procurement Division Conference Room, Bradenton, FL 34205.** Attendance is not mandatory, but is highly encouraged.

DEADLINE FOR CLARIFICATION REQUESTS: **5:00 PM June 8, 2017**

BID OPENING TIME AND DATE DUE: **3:00 PM on June 22, 2017**

This project is funded by the Federal Transit Administration. Bidders shall comply fully with all Federal and State guidelines for this procurement. Davis Bacon Prevailing Wage Rate in effect for this project.

FOR INFORMATION CONTACT:
Olga Valcich, CPPB, Contract Specialist
(941) 749-3055
Olga.valcich@mymanatee.org
Manatee County Financial Management Department
Procurement Division

AUTHORIZED FOR RELEASE: _____

Table of Contents
IFB 17-0817OV

SECTION A
INFORMATION TO BIDDERS

A.01 OPENING LOCATION

Sealed bids will be **publicly opened** at the **Manatee County Procurement Division, 1112 Manatee Avenue West, Suite 803, Bradenton, Florida 34205** in the presence of County officials at the time and date stated, or soon thereafter. All bidders or their representatives are invited to attend the sealed bid opening.

Any bids received after the stated time and date will not be considered. It shall be the sole responsibility of the bidder to have their bid delivered to the Manatee County Procurement Division for receipt on or before the stated time and date. Bidder shall be solely and strictly responsible for its timely delivery to the Procurement Division. Bids delayed by mail, courier, or bids delayed for any other reason, shall not be considered, shall not be opened at the public opening, and arrangements shall be made for their return at the bidder's request and expense.

A.02 SEALED & MARKED

Bids shall be submitted in **duplicate, one original (marked Original) and one copy/copies (marked Copy)** of your **signed bid** shall be submitted in one **sealed** package, clearly marked on the outside **"Sealed Bid 17-0817OV, MCAT 2017 Construction of ADA Compliant Bus Stop Landing Pads, Walkways, Sidewalks, Shelter Pads and Bench Pads Project, Manatee County, FL** with your company name.

For your convenience, a mailing label is provided with this Invitation for Bid or you may address the package as follows:

Manatee County Purchasing Division
1112 Manatee Avenue West, Suite 803
Bradenton, Florida 34205
Sealed Bid 17-0817OV, MCAT 2017 Construction of ADA Compliant Bus Stop Landing Pads, Walkways, Sidewalks, Shelter Pads and Bench Pads Project, Manatee County, FL

All blank spaces on the bid form must be filled in as noted with amounts extended and totaled and no modifications shall be made in the wording of the forms or in the items thereupon. In the event an edit is made in your submittal, the bidder shall write its initials by the change. Any bid may be rejected which contains any omissions, alterations, irregularities of any kind, or which in any manner fail to conform to the requirements of this IFB.

A bid made by an individual, either in his/her own or proper person or under a trade or firm name, shall be executed under the individual's signature. If made by a partnership, the bid shall be executed by two or more of the general partners. If made by a corporation, the bid shall be executed by its President or other legally authorized corporate officer or agent.

A.03 BID FORMS

Bids must be submitted on the provided forms, although additional pages may be attached. **Bidders must fully complete all pages of the Bid Forms. Bid Forms must be executed by an authorized signatory who has the legal authority to make the bid and bind the company. Bidders must fully comply with all requirements of this IFB in its entirety.** Failure to comply may result in bidder being deemed nonresponsive.

A.04 MATHEMATICAL ERRORS

Bid Forms without imbedded mathematical formulas:
In the event of multiplication/extension error(s), the unit price shall prevail. In the event of addition error(s) the extension totals will prevail. In the event the dollar amount for contract contingency is omitted, it will be added to the total price of the bid.

Bid Forms with imbedded mathematical formulas:
Interactive Bid Forms that contain mathematical formulas may be used for automating lengthy and complex bid forms. In the event these forms are used and a multiplication/extension error(s) is discovered, the unit price entered by the vendor shall prevail. The vendor shall assume the responsibility and accuracy of the information input in the bid form and therefore shall verify that the calculations are correct before submitting their bid.

Regardless of which type of bid form is used, all bids shall be reviewed mathematically and corrected by the Procurement Division, if necessary, using these standards, prior to additional evaluation.

A.05 SECURING BID DOCUMENTS

IFB's and all documents issued pursuant to the IFB are available for download at no charge at mymanatee.org by clicking on "Bids and Proposals" on the left side of the home page. You may view and print these pdf files using Adobe Reader software.

Manatee County may also use DemandStar to distribute bids. Visit the DemandStar website at www.Demandstar.com for more information regarding this service. Participation in the DemandStar system is not a requirement for doing business with Manatee County.

Complete copies of the IFB and all related documents are available for public inspection at the Manatee County Procurement Division, 1112 Manatee Avenue West, Suite 803, Bradenton, FL 34205, or by calling (941) 749-3014. Appointments are encouraged. Documents are available between the hours of 9:00 AM and 4:00 PM Monday through Friday, with the exception of holidays.

In addition, Manatee County informs the Manatee Chamber of Commerce of all active solicitations who then distributes the information to their members.

A.06 EXAMINATION OF BID DOCUMENTS AND SITE(S)

It is the responsibility of each bidder before submitting a bid to (a) examine all IFB documents thoroughly; (b) consider federal, state, and local codes, laws, and regulations which may affect costs, progress, performance, or furnishing of the work; (c) study and carefully correlate bidder's observations with the IFB documents; and (d) notify the County of all conflicts, errors, or discrepancies in the IFB documents prior to the deadline for clarification requests.

A.07 NON-EXCLUSIVE

Unless otherwise stated in this bid specification, any contracts resulting from this bid are nonexclusive. The County reserves the right, in its sole opinion, to purchase items listed in this bid through other sources, including the State of Florida contracts, cooperatives, and other current government contracts. The County reserves the right to solicit separate bids for requirements that are a portion of a larger contract bid as a whole. Additionally at the County's sole option, additional contracts may be entered into as a result of such situations as unusual volumes, time/delivery requirements, special requirements, other brands, lease, project specific requirements, or similar situations.

A.08 MODIFICATION OF BID DOCUMENTS

If a bidder wishes to recommend changes to any portion of the IFB documents, the bidder shall furnish, in writing, data and information necessary to aid County in evaluating the request to modify the IFB documents. County is not obligated to make any changes to the IFB documents. Unless an addendum is issued, the IFB documents shall remain unaltered.

A.09 CLARIFICATION REQUESTS & ADDENDA

Each bidder shall examine all IFB documents and shall judge all matters relating to their adequacy and accuracy. Any inquiries, suggestions or requests concerning interpretation, clarification or additional information pertaining to this IFB shall be made through the Manatee County Procurement Division. County shall not be responsible for oral interpretations given by any County employee, representative, or others.

5:00 PM, June 8, 2017 shall be the deadline to submit to the Procurement Division, in writing, all inquiries, suggestions, or requests concerning interpretation, clarification or additional information pertaining to this IFB.

This deadline has been established to maintain fair treatment of all potential bidders, while maintaining progression of the work.

If any addenda are issued to this IFB, County will post the documents on the Procurement Division's web page at http://www.mymanatee.org/purchasing, and then by clicking on "Bids and Proposals". If the original solicitation was broadcast via DemandStar, the addenda will also be broadcast on the DemandStar distribution system to "Planholders" on this web service.

The issuance of a written addendum is the only official method whereby interpretation, clarification or additional information can be given.

It shall be the **responsibility of each bidder, prior to submitting a bid**, to contact the Procurement Division (see contact information on the cover page) to **determine if any addenda were issued** and to make such addenda a part of their bid.

A complete set of the IFB documents must be used in preparing bids. County assumes no responsibility for errors and misinterpretations resulting from the use of incomplete sets of bid documents.

A.10 CONFIDENTIALITY OF SECURITY RELATED RECORDS

(a) Pursuant to Florida Statutes § 119.071(3), the following records (hereinafter referred to collectively as "the Confidential Security Records") are confidential and exempt from the disclosure requirements of Florida Statutes § 119.07(1):

1. A Security System Plan or portion thereof for any property owned by or leased to the County or any privately owned or leased property held by the County.

2. Building plans, blueprints, schematic drawings, and diagrams, including draft, preliminary, and final formats, which depict the internal layout and structural elements of a building, arena, stadium, water treatment facility, or other structure owned or operated by the County.

3. Building plans, blueprints, schematic drawings, and diagrams, including draft, preliminary, and final formats, which depict the internal layout or structural elements of an attractions and recreation facility, entertainment or resort complex, industrial complex, retail and service development, office development, or hotel or motel development in the possession of, submitted to the County.

(b) Contractor/Vendor agrees that it shall not, as a result of a public records request or for any other reason disclose the contents of, or release or provide copies of the Confidential Security Records to any other party absent the express written authorization of the County's Property Management Director or to comply with a court order requiring such release or disclosure. To the extent Contractor/Vendor receives a request for such records, it shall immediately contact the County's designated Contract Manager who shall coordinate the County's response to the request. Notwithstanding the foregoing, the Contractor/Vendor may

1. Disclose or release Security System Plans to:

(A) The property owner or leaseholder; or
(B) Another state or federal agency to prevent, detect, guard against, respond to, investigate, or manage the consequences of any attempted or actual act of terrorism, or to prosecute those persons who are responsible for such attempts or acts.

2. Disclose or release building plans, blueprints, schematic drawings, and diagrams, including draft, preliminary, and final formats, which depict the internal layout and structural elements of a building, arena, stadium, water treatment facility, or other structure owned or operated by the County:

(A) To another governmental entity if disclosure is necessary for the receiving entity to perform its duties and responsibilities;
(B) To a licensed architect, engineer, or contractor who is performing work on or related to the building, arena, stadium, water treatment facility, or other structure owned or operated by the County and is contractually bound by the Contractor/Vendor to comply with this Article/Section; or
(C) Upon a showing of good cause before a court of competent jurisdiction.

(c) For purposes of this Article/Section, the term "Security System Plan" includes all:

1. Records, information, photographs, audio and visual presentations, schematic diagrams, surveys, recommendations, or consultations or portions thereof relating directly to the physical security of the facility or revealing security systems;
2. Threat assessments conducted by any agency or any private entity;
3. Threat response plans;
4. Emergency evacuation plans;
5. Sheltering arrangements; or
6. Manuals for security personnel, emergency equipment, or security training.

A.11 LOBBYING

After the issuance of any IFB, prospective bidders or their agents, representatives or persons acting at the request of such bidder shall not contact, communicate with or discuss any matter relating to the IFB with any officer, agent or employee of Manatee County other than the Purchasing Official or the contact identified on the first page of this IFB, pursuant to the Manatee County Code of Laws. This prohibition includes copying such persons on all written communication, including email correspondence. This requirement begins with the issuance of an IFB and ends upon execution of the final agreement or when the IFB has been cancelled. Violators of this prohibition shall be subject to sanctions as provided in the Manatee County Code of Laws.

A.12 UNBALANCED BIDDING PROHIBITED

County recognizes that large and/or complex projects will often result in a variety of methods, sources, and prices. However, where in the opinion of the County such variation does not appear to be justified, given bid requirements and industry and market conditions, the bid will be presumed to be unbalanced. Examples of unbalanced bids will include:

a. Bids showing omissions, alterations of form, additions not specified, or required conditional or unauthorized alternate bids.

b. Bids quoting prices that substantially deviate, either higher or lower, from those included in the bids of competitive bidders for the same line item unit costs.

c. Bids where the unit costs offered are in excess of or below reasonable cost analysis values.

In the event County determines that a bid is presumed unbalanced, it will request the opportunity to and reserves the right to, review all source quotes, bids, price lists, letters of intent, etc., which the bidder obtained and upon which the bidder relied upon to develop its bid. County reserves the right to reject as nonresponsive any presumptive unbalanced bids where the bidder is unable to demonstrate the validity and/or necessity of the unbalanced unit costs.

A.13 WITHDRAWAL OF BIDS

Bidders may withdraw bids as follows:

a. Mistakes discovered before the public bid opening may be withdrawn by written notice from the bidder submitting the bid. This request must be received in the Procurement Division prior to the time set for delivery and opening of the bids. A copy of the request shall be retained and the unopened bid returned to the bidder; or

b. After the bids are opened or a selection has been determined, but before an agreement is signed, a bidder alleging a material mistake of fact may be permitted to withdraw their bid if:

   1. The mistake is clearly evident in the solicitation document; or

   2. Bidder submits evidence which clearly and convincingly demonstrates that a mistake was made. Request to withdraw a bid must be in writing and approved by the Purchasing Official.

A.14 IRREVOCABLE OFFER

Any bid may be withdrawn up until the time and date set for opening of the bid. Any bid not so withdrawn shall, upon opening, constitute an irrevocable offer for a period of ninety (90) days to sell to Manatee County the goods or services set forth in the attached IFB until one or more of the bids have been duly accepted by County.

A.15 BID EXPENSES

All expenses for submitting bids to the County are to be borne by the bidder.

A.16 RESERVED RIGHTS

County reserves the right to accept or reject any and/or all bids, to waive irregularities and technicalities, and to request resubmission. Also, County reserves the right to accept all or any part of the bid and to increase or decrease quantities to meet additional or reduced requirements of County. Any sole response received by the first submission date may or may not be rejected by County depending on available competition and current needs of County. For all items combined, the bid of the lowest, responsive, responsible bidder will be accepted, unless all bids are rejected.

The lowest, responsible bidder shall mean that bidder who makes the lowest bid to sell goods and/or services of a quality which meets or exceeds the quality of goods and/or services set forth in the IFB documents or otherwise required by County.

To be responsive, a bidder shall submit a bid which conforms in all material respects to the requirements set forth in the IFB. **Bidders must fully comply with the IFB documents in their entirety.**

To be a responsible bidder, the bidder shall have the capability in all respects to perform fully the bid requirements, and the tenacity, perseverance, experience, integrity, reliability, capacity, facilities, equipment, and credit which will assure good faith performance.

Also, County reserves the right to make such investigation as it deems necessary to determine the ability of any bidder to furnish the service requested. Information County deems necessary to make this determination shall be provided by the bidder. Such information may include, but shall not be limited to current financial statements, verification of availability of equipment and personnel, and past performance records.

A.17 APPLICABLE LAWS

Bidder must be authorized to transact business in the State of Florida. All applicable laws and regulations of the State of Florida and ordinances and regulations of Manatee County will apply to any resulting agreement. Any involvement with the Manatee County Procurement Division shall be in accordance with the Manatee County Procurement Ordinance as amended.

A.18 SCRUTINIZED COMPANIES

Florida Statutes § 287.135, as amended from time to time, may contain limitations on the part of a company to conduct business with the County. Submission of a response to this solicitation shall be subject to all procedural requirements contained within that statute including the submission of any required certification of eligibility to contract with the County. It shall be the responsibility of the company responding to this solicitation to concurrently review the current version of the statute and ensure it is compliant. To the extent a certification is required, it shall be provided on the form located at **Attachment E** *Vendor Certification Regarding Scrutinized Companies Lists.*

A.19 COLLUSION

By submitting a bid in response to this IFB, bidder certifies that it has not divulged, discussed or compared its bid with any other bidder, and has not colluded with any other bidder or parties to this bid whatsoever. Also, bidder certifies, and in the case of a joint bid each party thereto certifies as to their own organization, that in connection with this bid:

a. any prices and/or cost data submitted have been arrived at independently, without consultation, communication, or agreement, for the purpose of restricting competition, as to any matter relating to such prices and/or cost data, with any other bidder or with any competitor;

b. any prices and/or cost data quoted for this bid have not been knowingly disclosed by the bidder and will not knowingly be disclosed by the bidder, prior to the scheduled opening, directly or indirectly to any other bidder or to any competitor;

c. no attempt has been made or will be made by the bidder to induce any other person or firm to submit or not to submit a bid for the purpose of restricting competition;

d. the only person or persons interested in this bid, principal or principals is/are named therein and that no person other than therein mentioned has any interest in this bid or in the resulting agreement to be entered into; and

e. no person or agency has been employed or retained to solicit or secure the resulting agreement upon an agreement or understanding or a commission, percentage, brokerage, or contingent fee except bona fide employees or established commercial agencies maintained by bidder for purpose of doing business.

A.20 CODE OF ETHICS

With respect to this bid, if any bidder violates, directly or indirectly, the ethics provisions of the Manatee County Procurement Ordinance and/or Florida criminal or civil laws related to public procurement, including but not limited to Florida Statutes Chapter 112, Part III, Code of Ethics for Public Officers and Employees, such bidder will be disqualified from eligibility to perform services or provide the goods described in this IFB, and may also be disqualified from furnishing future goods or services to, and from submitting any future bids to supply goods or services to Manatee County.

By submitting a bid, the bidder represents to County that all statements made and materials submitted are truthful, with no relevant facts withheld. If a bidder is determined to have been untruthful in their bid or any related presentation, such bidder will be disqualified from eligibility to provide the goods and/or services described in this IFB, and may also be disqualified from furnishing future goods or services to, and from submitting any future bids to supply goods or services to Manatee County.

A.21 PUBLIC CONTRACTING AND ENVIRONMENTAL CRIMES

A person or affiliate who has been placed on the convicted vendor list following a conviction for a public entity crime, as that term is defined in Section 287.133, Florida Statutes, may not submit a bid to provide any goods or services to a public entity; may not submit a bid with a public entity for the construction or repair of a public building or public work; may not submit bids on leases of real property to a public entity; may not be awarded or perform work as a contractor, supplier, subcontractor, or consultant under an agreement with any public entity; and may not transact business with any public entity in excess of the threshold amount provided in Section 287.017, Florida Statutes, for Category Two for a period of thirty-six (36) months following the date of being placed on the convicted list.

In addition, the Manatee County Procurement Code prohibits the award of any bid to any person or entity who/which has, within the past five (5) years, been convicted of, or admitted to in court or sworn to under oath, a public entity crime or of any environmental law that, in the reasonable opinion of the Purchasing Official, establishes reasonable grounds to believe the person or business entity will not conduct business in a responsible matter.

To ensure compliance with the foregoing, the Code requires all persons or entities desiring to do business with County to execute and file with the Purchasing Official an affidavit, executed under the pain and penalties of perjury, confirming that person, entity and any person(s) affiliated with the entity, does not have such a record and is therefore eligible to seek and be awarded business with County. In the case of a business entity other than a partnership or a corporation, such affidavit shall be executed by an authorized agent of the entity. In the case of a partnership, such affidavit shall be executed by the general partner(s). A Public Contracting and Environmental Crimes Certification form is attached herein for this purpose.

A.22 CONTRACT

The agreement resulting from the acceptance of a bid shall be in the form of a purchase order.

A.23 TERMINATION OF CONTRACT

Manatee County reserves the right to terminate any contract, at any time, with or without cause.

A.24 PURCHASING COOPERATIVE

It is the intent of this Invitation for Bid to include requirements and to obtain bids on behalf of Manatee County and reserve the right for the entities belonging to the Sarasota Bay Chapter of NIGP to obtain purchases from this bid proposal. This opportunity is also made available to any and all local, County, Public Educational Institutions, non-profits, and the State of Florida.

Pursuant to their own governing laws, and subject to the agreement of the vendor, other entities may be permitted to make purchases at the terms and conditions contained herein. Manatee County will not be financially responsible for the purchase of other entities from this solicitation.

A.25 DISCOUNTS

Any and all discounts must be incorporated in the prices contained in the bid and not shown separately. The prices indicated on the Bid Form shall be the prices used in determining award.

A.26 TAXES

Manatee County is exempt from Federal Excise and State Sales Taxes. (F.E.T. Cert. No. 59-78-0089K; Florida Sales Tax Exempt Cert. No. 85-8012622206C-6); therefore, the bidder is prohibited from delineating a separate line item in his bid for any sales or service taxes. Nothing herein shall affect the bidder's normal tax liability.

The successful bidder shall be responsible for the payment of taxes of any kind and character, including, but not limited to sales, consumer, use, and other similar taxes payable on account of the work performed and materials furnished under the award in accordance with the laws and regulations of the place of the project which are applicable during the performance of the work. Nothing herein shall affect the bidder's normal tax liability.

A.27 DESCRIPTIVE INFORMATION

Unless otherwise specifically provided in the IFB documents, all equipment, materials and articles provided shall be new and of the most suitable grade for the purpose intended. Unless otherwise specifically provided in the IFB documents, reference to any equipment, material, article or patented process, by trade name, brand name, make or catalog number, shall be regarded as establishing a standard of quality and shall not be construed as limiting competition.

A.28 DELIVERY

Unless otherwise specified, all prices are to be FOB Destination.

A.29 AUTHORIZED PRODUCT REPRESENTATION

The bidder, by virtue of submitting the name and specifications of a manufacturer's product, will be required to furnish the named manufacturer's product. Failure to do so may, in the County's sole discretion, be deemed a material breach of the resulting agreement and shall constitute grounds for County's immediate termination of the resulting agreement.

A.30 ROYALTIES AND PATENTS

The successful bidder shall pay all royalties and license fees for equipment or processes in conjunction with the equipment and/or services being furnished. Successful bidder shall defend all suits or claims for infringement of any patent, trademark or copyright,

and shall save County harmless from loss on account thereof, including costs and attorney's fees.

A.31 AMERICANS WITH DISABILITIES ACT

County does not discriminate upon the basis of any individual's disability status. This non-discrimination policy involves every aspect of County's functions including one's access to, participation, employment, or treatment in its programs or activities. Anyone requiring **reasonable accommodation** for an Information Conference or Bid Opening should contact the person named on the cover page of this IFB document at least twenty-four (24) hours in advance of either activity.

A.32 EQUAL EMPLOYMENT OPPORTUNITY

In accordance with Title VI of the Civil Rights Act of 1964, Title 15, Part 8 of the Code of Federal Regulations and the Civil Rights Act of 1992, County hereby notifies all bidders that it will affirmatively ensure minority business enterprises are afforded full opportunity to participate in response to this IFB and will not be discriminated against on the grounds of race, color, national origin, religion, sex, age, handicap, or marital status in consideration of bid award.

A.33 MINORITY BUSINESS ENTERPRISE / DISADVANTAGED BUSINESS ENTERPRISE

The State of Florida Office of Supplier Diversity provides the certification process and the database for identifying certified MBE/DBE firms. Additional information can be obtained at http://www.osd.dms.state.fl.us/iframe.htm or by calling (850) 487-0915.

Manatee County Area Transit Goal for FY 2017, 2018 and 2019 for Disadvantaged Business Enterprises (DBE) Participation in Federal Transit Administration (FTA) funded projects is 0.7%.

A.34 SUBCONTRACTORS

The successful bidder will obtain prior written approval from the County for any subcontractor(s) and the work they will perform. A subcontractor is defined as any entity performing work within the scope of the project who is not an employee of the successful bidder.

Bidders subcontracting any portion of the work shall include a list of subcontractors along with their bid. The list shall include: name and address of subcontractor, type of work to be performed and the percent of the contract amount to be subcontracted.

Prior to the employment of any person under this contract, the successful bidder shall utilize the U.S. Department of Homeland Security's E-Verify system to verify the employment eligibility of (a) all persons employed during the contract term by the successful bidder to perform employment duties within Florida and (b) all persons, including subcontractors, assigned by the successful bidder to perform work pursuant to the contract with Manatee County. For more information on this process, please refer to United States Citizenship and Immigration Service site at: http://www.uscis.gov/.

Only those individuals determined eligible to work within the United States shall be employed under this contract.

By submission of a bid in response to this IFB, the successful bidder commits that all employees and subcontractors will undergo e-verification before placement on this contract.

If County has reasonable objection to any subcontractor, the County may request the successful bidder to submit an acceptable substitute without an increase in contract sum or contract time.

If successful bidder declines to make any such substitution, the County may award the resulting agreement to the next lowest qualified bidder that proposes to use acceptable subcontractors, who County does not make written objection to. In the event the successful bidder declines to make any such substitution post award, the County may exercise its right to terminate the agreement.

The successful bidder shall maintain sole responsibility for the actions of its employees and subcontractors. New employees brought in after contract award shall follow the same requirement stated above for the life of the contract.

A.35 E-VERIFY

Contractor:

1. Shall utilize the U.S. Department of Homeland Security's E-Verify system to verify the employment eligibility of all new employees hired by the Contractor during the term of the contract and

2. Shall expressly require any subcontractors performing work or providing services pursuant to the state contract to likewise utilize the U.S. Department of Homeland Security's E-Verify system to verify the employment eligibility of all new employees hired by the subcontractor during the contract term.

A.36 DISCLOSURE

Upon receipt, all inquiries and responses to inquiries related to this IFB become "Public Records", and shall be subject to public disclosure consistent with Florida Statues, Chapter 119.

Bids become subject to disclosure thirty (30) days after the opening or if a notice of intent to award decision is made earlier than this time as provided by Florida Statutes § 119.071(1)(b). No announcement or review of the bid shall be conducted at the public bid opening.

Based on the above, County will receive bids at the time and date stated and will make public at the opening the names of the business entities of all that submitted a bid and

any amount presented as a total offer without any verification of the mathematics or the completeness of the bid.

If County rejects all bids and concurrently notices its intent to reissue the solicitation, the rejected bids are exempt from public disclosure until such time as County provides notice of an intended decision concerning the reissued solicitation or until County withdraws the reissued solicitation. A bid is not exempt for longer than twelve (12) months after the initial notice rejecting all bids.

Pursuant to Florida Statutes 119.0701, to the extent CONTRACTOR is performing services on behalf of the COUNTY, contractor must:

a. Keep and maintain public records required by public agency to perform the service.

b. Upon request from the public agency's custodian of public records, provide the public agency with a copy of the requested records or allow the records to be inspected or copied within a reasonable time at a cost that does not exceed the cost provided in Florida Statutes, Chapter 119, or as otherwise provided by law.

c. Ensure that public records that are exempt or confidential and exempt from public records disclosure requirements are not disclosed except as authorized by law for the duration of the contract term and following completion of the contract if the contractor does not transfer the records to the public agency.

d. Upon completion of the contract, transfer, at no cost, to the public agency all public records in possession of contractor or keep and maintain public records required by the public agency to perform the service. If the contractor transfers all public records to the public agency upon completion of the contract, the contractor shall destroy any duplicate public records that are exempt or confidential and exempt from public records disclosure requirements. If the contractor keeps and maintains public records upon completion of the contract, the contractor shall meet all applicable requirements for retaining public records. All records stored electronically must be provided to the public agency, upon request from public agency's custodian of public records, in a format that is compatible with the information technology systems of the public agency.

IF THE CONTRACTOR HAS QUESTIONS REGARDING THE APPLICATION OF CHAPTER 119, FLORIDA STATUTES, TO THE CONTRACTOR'S DUTY TO PROVIDE PUBLIC RECORDS RELATING TO THIS CONTRACT, CONTACT OWNER'S CUSTODIAN OF PUBLIC RECORDS AT: (941) 742-5845, debbie.scaccianoce@mymanatee.org, Attn: Records Manager, 1112 Manatee Ave W., Bradenton, FL 34205.

A.37 LOCAL PREFERENCE (IF APPLICABLE)

Local business is defined as a business legally authorized to engage in the sale of the goods and/or services, and which certifies within its bid that for at least six (6) months prior to the announcement of the Invitation For Bid it has maintained a physical place of business in Manatee, Desoto, Hardee, Hillsborough, Pinellas or Sarasota County with at least one full-time employee at that location.

Local preference shall not apply to the following categories of agreements:

1. Purchases or agreements which are funded, in whole or in part, by a governmental or other funding entity, where the terms and conditions governing the funds prohibit the preference.

2. Any bid announcement which specifically provides that local preference, as set forth in this section, is suspended due to the unique nature of the goods or services sought, the existence of an emergency as found by either the County Commission or County Administrator, or where such suspension is, in the opinion of the County Attorney, required by law.

3. For a competitive solicitation for construction services in which fifty percent (50%) or more of the cost will be paid from state-appropriated funds which have been appropriated at the time of the competitive solicitation.

To qualify for local preference under this section, **a local business must provide certification to County** by completing an "**Affidavit as to Local Business"** form which is available for download at www.mymanatee.org/vendor. Click on "Affidavit for Local Business" to access and print the form. Complete, notarize, and mail the notarized original to: Manatee County Procurement Division, 1112 Manatee Avenue West, Suite 803, Bradenton, FL 34205.

It is the responsibility of the bidder to ensure accuracy of the affidavit and notify County of any changes affecting same.

A.38 VENDOR REGISTRATION

Registering your business will provide Manatee County a sourcing opportunity to identify supplies of goods and services, plus identify local businesses.

You may register online at www.mymanatee.org/vendor. If you need any assistance, please call (941) 749-3014, Monday – Friday, 8:00 A.M. to 5:00 P.M., excluding holidays, and the Procurement Division can assist you as needed.

Registration is not mandatory; however, by taking the time to register, you are helping the County to provide timely notification of quotation, bid and proposal opportunities to your business.

A.39 ENVIRONMENTAL SUSTAINABILITY

All bidders are encouraged to use as many environmentally preferable "green" products, materials, supplies, etc. as possible in order to promote a safe and healthy environment. Environmentally preferable are products or services that have a reduced adverse effect on the environment.

Bidders shall acknowledge whether or not their organization has an environmental sustainability initiative by checking the appropriate box on the bid form. In addition, the bidder shall submit a summary of their environmental sustainability initiative along with their bid. This information will be used as a determining factor in the award decision when all other evaluative factors, including local preference policies are otherwise equal.

A.40 ePAYABLES

Manatee County Board of County Commissioners and the Manatee County Clerk of the Circuit Court have partnered to offer the ePayables program, which allows payments to be made to vendors via credit cards.

The Clerk of the Circuit Court will issue a unique credit card number to vendor after goods are delivered or services rendered, vendors submit invoices to the remit to address on the purchase order. When payments are authorized, an email notification is sent to the vendor. The email notification includes the invoice number(s), invoice date(s), and amount of payment. There is no cost for vendors to participate in this program; however, there may be a charge by the company that processes your credit card transactions.

If you are interested in participating in this program, please complete the ePayables Application attached herein and return the completed form via email to Ms. Lori Bryan, Supervisor at lori.bryan@manateeclerk.com.

A.41 FUNDING

This bid is subject to the appropriation of funds in an amount sufficient to allow continuation of the County's performance in accordance with the terms and conditions of this bid. The County shall provide prompt written notice to the vendor that sufficient funds have not been appropriated to continue its full and faithful performance under the terms of this bid, and shall, effective thirty (30) days after giving such notice or upon the expiration of the time for which funds were appropriated, whichever occurs first, be thereafter released of all further obligations in any way related to the bid.

A.42 CONDITIONS FOR EMERGENCY/HURRICANE OR DISASTER – TERM CONTRACTS

It is hereby made a part of this Invitation for Bid that before, during and after a public emergency, disaster, hurricane, flood, or other acts of God that Manatee County shall require a "first priority" basis for services. It is vital and imperative that the majority of citizens are protected from any emergency situation which threatens public health and

safety, as determined by the County. Contractor agrees to provide services to the County or other governmental entities as opposed to a private citizen, on a first priority basis. The County expects to pay contractual prices for all services required during an emergency situation. Contractor shall furnish a twenty-four (24) hours phone number in the event of such an emergency.

A.43 PRECEDENCE

Statements contained in the Scope of Work or Bid Summary section of this Invitation for bid, which vary from the information contained in this section A, Information to Bidders, shall have precedence.

A.44 BUY AMERICA REQUIREMENTS

The Buy America Certification form shall be completed and returned with your Bid Form.

A.45 DAVIS-BACON WAGE DETERMINATION ACT

Davis-Bacon Wage Determination for Prevailing Wages, Decision Number: FL170257, 03/10/2017 – FL 257, State: Florida / Construction Type: Building

A.46 LOBBYING REQUIREMENTS

The Lobbying Certification for shall be completed and returned with your Bid Form.

A.47 Government-Wide Debarment and Suspension (Nonprocurement) Certification)

Certification form shall be completed and returned with your Bid Form.

END OF SECTION A

SECTION B
TERMS AND CONDITIONS

B.01 PURPOSE

It is the purpose of Manatee County to establish a multi-year written agreement for the Public Works Transit Division (MCAT) to procure the services of a Certified General Contractor or a Certified Building Contractor, on an **"as required"** basis for the construction of ADA Compliant Bus Stop Landing Pads, Walkways, Sidewalks, Shelter Pads and Bench Pads Project throughout various locations in Manatee County in accordance with the specifications, plans, terms and conditions of this Invitation for Bid.

The primary goal of this contract is the speedy acquisition and construction services of ADA Compliant Bus Stop Landing Pads, Walkways, Sidewalks, Shelter Pads and Bench Pads.

The Contractor shall furnish all shop drawings, working drawings, labor, materials, equipment, tools, services and incidentals necessary to complete all work required by these Specifications and as shown on the Contract Drawings.

The Contractor shall perform the work complete, in place and ready for continuous service and shall include any repairs, replacements, and/or restoration required as a result of damages caused by Contractor prior to the acceptance by the County.

The Contractor shall furnish and install all materials, equipment and labor which is reasonably and properly inferable and necessary for the proper completion of the work, whether specifically indicated in the Contract Documents or not.

B.02 FORM OF AGREEMENT / BLANKET PURCHASE ORDER

The Agreement resulting in the acceptance of any bid from this Invitation for Bid shall be made in the form of a blanket purchase order. Successful bidder (s) shall be bound by the terms and conditions in these Invitation for Bid documents as well as the blanket purchase order.

Should a conflict exist between the terms and conditions contained in these Invitation for Bid documents and the resulting blanket purchase order, the terms contained in the Invitation for Bid shall take precedence.

One or more blanket purchase order(s) shall be issued as a result of this bid. A blanket purchase order number, when accompanied by a valid written release order will authorize work on an "as required" basis, bound by the terms and conditions herein.

The successful bidder(s) is not authorized to proceed with, and will not be compensated for, any work that is not authorized by a valid written release order number issued by the County.

Exact quantities of service to be procured under this contract cannot be determined at this time. The quantities listed on the Bid Forms are estimated and only given as a guideline for preparing your bid and should not be construed as representing actual quantities to be purchased.

Release orders will be issued on an "as required basis". Release orders may be based upon estimated quantities which may be increased or decreased based on actual quantities used. Manatee County reserves the right to add or delete items as necessary at any time during the course of any resulting Agreement.

B.03 TERM

Any blanket purchase order resulting from this Invitation for Bid shall be active for a period of three (3) years, commencing from date of award.

B.04 RENEWAL

Provided that there are no changes in prices, terms or conditions, blanket purchase orders shall be automatically extended / renewed beyond the initial thirty six (36) month term for up to two additional twelve (12) month periods, not to exceed total blanket purchase order duration of sixty (60) months.

Written notice of intention not to renew must be submitted by the successful bidder(s) 90 days prior to the end of a term. Should the County exercise its right to not renew, it will provide written notice of at least 30 days prior to the successful bidder(s).

B.05 PRICE ADJUSTMENTS FOR RENEWAL PERIODS

Prices shall remain firm for the base contract term. Requested price changes for the remaining terms may be adjusted in accordance with the Bureau of Labor Statistics Consumer Price Index (CPI-U); U.S.A. 1982-84 equals 100. The adjustment shall be calculated by dividing the Index on the anniversary date of the previous year's index and subtracting 1.00. If, on the anniversary date, the Index shows a change from the Index of the previous year, this percentage, not to exceed four (4%) percent annually, will be used to adjust the unit prices Bid.

B.06 LIQUIDATED DAMAGES

If the Contractor refuses or fails to prosecute the Work, or any separable part thereof, with such diligence as will hinder its completion within the time specified, the County may seek damages. The actual damages for delay will be impossible to determine and in lieu thereof, the Contractor shall pay to the County the sum of **$100.00** as fixed, agreed, and liquidated damages for each calendar day of the delay until the Work is finally accepted by the County and the Contractor and his Surety shall be liable for the amount thereof.

B.07 INVOICES

Within forty-five (45) days after services have been rendered, and the acceptance by the County, and presentation of an appropriate invoice, the County shall pay the total amount due. Payment invoices must indicate both the blanket purchase order number and the release order number. Not having both on the invoice may delay the processing of payment. Contractor may apply for partial payment on monthly basis, based on the amount of work completed in compliance with the provisions of the contract.

The Contractor agrees to furnish an affidavit stating that all laborers, material men, and subcontractors have been paid on the project for Work covered by the application for payment and that a partial or complete release of lien, as may be necessary, be properly executed by the material men, laborers, subcontractors on the project for Work covered by the application for payment, sufficient to secure the County from any claim whatsoever arising out of the aforesaid Work.

All Pay Applications shall be submitted with a Construction Project Photo and shall reference in detail, the name and address of the project location, the Bus Stop ID Number, the Condition Typical Number (for example: ADA Boarding Pads, Condition Typical 1, Boarding Pads w/ Shelter Slabs, Condition Typical 4, Boarding Pads w/ Bench Slabs, Condition Typical 10), the Blanket Purchase Order Number, the Release Number, and the quantity for each item to complete the release. If a release is over 100K, an executed public construction bond will need to be made part of the release. **(Details included in Section D, Insurance and Bonding Requirements).**

B.08 BI-WEEKLY REPORTS

The Contractor shall be required to submit a copy of a **Bi-Weekly Report Form** to be used that summarizes the Work completed at the end of each two week period.

The Bi-Weekly Report Form shall be submitted at the end of each two week period during the construction project (even when no Work is done), between the time the Notice to Proceed is issued and the time of Final Acceptance of the completed project. The Bi-Weekly Report shall be submitted by 3:00 p.m. on the first Monday following a two week period. This report shall be provided via hardcopy, fax or email.

B.09 MATERIAL SAFETY DATA SHEET

It shall be the responsibility of the successful bidder (s) to submit upon notification of release order, a Material Safety Data Sheet (MSDS) for all toxic substances in accordance with Florida Statutes Chapter 442, The Right to Know Law, which mandates on-site MSDS for all toxic substances appearing in the workplace.

B.10 REGULATIONS

It shall be the responsibility of the bidder to assure compliance with any OSHA, EPA and/or other federal or state of Florida rules, regulations or other requirements, as each may apply.

B.11 MANUALS, SCHEMATICS, HANDBOOKS (IF APPLICABLE)

All manuals, schematics and handbooks shall be provided which are applicable to the equipment delivered. An operators manual, parts manual and technician manual must also be provided. Parts lists (manuals) must include OEM part numbers for items not manufactured by the bidder. Contractor shall furnish two (2) copies of each.

B.12 INDEMNIFICATION

The Contractor covenants and agrees to indemnify and save harmless the County, its agents and employees, from and against all claims, suits, actions, damages, causes of action, or judgments arising out of the terms of the resulting agreement for any personal injury, loss of life, or damage to the property sustained as a result of the performance or non-performance of services or delivery of goods; from and against any orders, judgments, or decrees, which may be entered against the County, its agents or employees; and from and against all costs, attorney's fees, expenses and other liabilities incurred in the defense of any such claim, suit or action, and the investigation thereof. Nothing in the award, resulting agreement, contract or Purchase Order shall be deemed to affect the rights, privileges and immunities of the County as set forth in Florida Statute Section 768.28.

B.11 WARRANTY AND GUARANTEE PROVISIONS

All work, materials, and equipment furnished as defined herein shall be guaranteed and warranted by the Contractor for a minimum period of **one (1) year** unless otherwise specified, from final acceptance by the County to be free from defects due either to faulty materials or equipment or faulty workmanship.

All materials, equipment, and workmanship furnished and installed by the Contractor is warranted and guaranteed by the Contractor to meet the required standards and to accomplish the purposes and functions of the project as defined, detailed, and specified herein.

The County shall, following discovery thereof, promptly give written notice to the contractor of faulty materials, equipment, or workmanship within the period of the guarantee and the contractor shall promptly replace any part of the faulty equipment, material, or workmanship at his own cost. These warranty and guarantee provisions create no limitations on the County as to any claims or actions for breach of guaranty or breach of warranty that the County might have against parties other than the contractor, and do not constitute exclusive remedies of the County against the contractor.

B.11 CANCELLATION

Successful bidder (s) shall be required to perform all work authorized in the release order and to supply all sufficiently skilled workers and suitable materials or equipment as may be required to perform. Failure to do so shall cause the County to order the stop of the work being performed pursuant to the release order until such time as the cause for the order has been eliminated. If successful bidder fails to perform the work

or maintain an established schedule authorized by the release order, without being excused, and falls behind by thirty calendar days or more, the County shall terminate the release order and select another successful bidder.

In addition, the County reserves the right to cancel all or any part of a release order with or without cause.

B.12 NO DAMAGES FOR DELAY

If at any time successful bidder (s) is delayed in the performance of successful bidder's responsibilities under a release order as the result of a default or failure to perform in a timely manner by County, successful bidder (s) shall not be entitled to any damages.

Successful bidder's sole remedy will be a right to extend the time for performance. Nothing herein shall preclude successful bidder (s) from any available remedy against any responsible party other than County.

B.13 FORCE MAJEURE

A party shall not be liable for any failure of or delay in the performance of this Agreement for the period that such failure or delay is due to causes beyond its reasonable control, including but not limited to acts of God, ware, strikes or labor disputes, embargoes, government orders or any other force majeure event.

B.14 NO INTEREST

Any monies not paid by the County when claimed to be due by the successful bidder for work pursuant to a release order shall not be subject to interest.

END OF SECTION B

SECTION C
BID SUMMARY

C.01 MINIMUM QUALIFICATIONS OF BIDDERS

No person who is not certified or registered as a **General Contractor OR a Certified Building Contractor** pursuant to Chapter 489, Florida Statutes, on the day the bid is submitted, and who has continuously held that certification or registration for a period of at least three (3) consecutive years immediately prior to the day the bid is submitted, may be qualified to bid on this Work. In the event that a bidder is a business organization, including a partnership, corporation, business trust or other legal entity as set forth in Section 489.119(2), Florida Statutes, then the bidder shall only be qualified to bid on this Work if: 1) the bidder (the business organization) is on the day the bid is submitted, and for at least three (3) consecutive years immediately prior to the day the bid is submitted has been, in continuous existence, properly licensed and registered as required by Florida law; and 2) the bidder, on the day the bid is submitted, has a certified or registered Qualifying Agent, as required by Section 489.119, Florida Statutes, and that Qualifying Agent has been the same Qualifying Agent of the bidder for a period of at least three (3) consecutive years immediately prior to the day the bid is submitted.

C.02 BASIS OF AWARD

The primary **Award** shall be made to the lowest, responsive and responsible Bidder meeting specifications and having the Total Bid Price for the Work as set forth in this Invitation for Bid. A secondary **Award** shall be made to the responsive, responsible bidder meeting specifications and having the second lowest Total Bid Price for the Work as set forth in this Invitation for Bid.

Bid prices shall include costs for furnishing all labor, equipment and/or materials for the completion of the Work in accordance with and in the manner set forth and described in the Contract documents.

Any Agreement, Contract, or Purchase Order resulting from the acceptance of the bid shall be made by a Purchase Order and be bound by the terms and conditions herein.

It is the intent of the County to place Blanket Release Orders with the lowest, responsive, responsible bidder who can provide the services as set forth in this Invitation for Bid. The County reserves the right to place Blanket Release Orders with other Contractors, in the event of an urgent, immediate need and the availability of material/service requested cannot be met by the lowest priced Contractor at the time of need.

In evaluating bids, County shall consider the qualifications of the bidders; and if required, may also consider the qualifications of the Subcontractors, suppliers, and other persons and organizations proposed. County may also consider the operating costs, maintenance requirements, performance data and guarantees of major items of materials and equipment proposed for incorporation in the Work.

C.03 THE WORK

It is the intent of Manatee County to establish an annual contract for the Public Works Transit Division (MCAT) to procure the services of a Certified General Contractor or a Certified Building Contractor, on an "as required" basis for the construction of ADA compliant bus stop landing pads, walkways, sidewalks, shelter pads and bench pads throughtout various locations of the County in accordance with the specifications, plans, terms and conditons of this Bid.

C.04 WORK AUTHORIZATION

Any work authorized for procurement under this contract shall be on an **"as required"** basis at various locations within the County. The Contractor is not authorized to proceed with, and will not be compensated for, any work that is not authorized by a valid Written Release Order issued by the County. All work shall be scheduled with the County's Representative. The Contractor shall be given a scope of work for each project and shall be required to visit the work site. The Contractor's Proposal to the County for completing the work shall include the number of days to complete the work and the total price to complete the work, including the work items required in accordance with the attached Bid Form. The County reserves the right to disapprove the Bid and shall have no obligation to issue a Release Order for the work.

If during performance of the Work additional work is determined to be required, a written proposal must be provided to the County for approval before any additional work is performed.

If additional quantities are required to complete the work, a "revised" release order detailing the additional work will be issued. It shall be the Contractor's responsibility to advise the County and obtain prior approval for additional quantities to be utilized beyond those specified in the release order.

C.05 PROJECT SCHEDULE

As Relese Orders are issued under the Blanket Purchase Order for the construction of the appropriate pads, individual project schedules will need to be supplied by the Contractor and approved by the County for each project.

C.06 PERMITS / FEES / REGULATIONS

Contractor shall be required to give all necessary notices, obtain all permits and inspections, and pay all costs in connection with the work. Contractor shall assure compliance with any OSHA, EPA, and/or federal, state, and local rules, regulations. Any conflicts between the specifications and code shall be brought to the attention of the County's representative and resolved before the work is continued.

The Contractor shall give all notices and comply with all laws bearing on the conduct of the work as drawn and specified. If the Contractor observes that the drawings and specifications are at variance therewith, Contractor shall promptly notify the County

in writing, and any necessary changes shall be made. If the Contractor performs any work contrary to such laws, ordinances, rules, and regulations and does not comply with the aforesaid procedure, Contractor shall bear all costs incidental to such violation.

All Work which will be performed on FDOT Roads will be required to follow the FDOT Design Standards.

C.07 LAYOUT OF WORK

The Contractor, where required, shall set construction stakes and batter boards for establishing lines, position of structures, slopes, and other controlling points necessary for the proper prosecution of the work. The stakes, as set, will be checked and approved by the County before construction is commenced.

C.10 WARNING SIGNS AND BARRICADES

The Contractor shall provide adequate signs, barricades, flashing lights, flagmen and watchmen, and take all necessary precautions for the protection of the work and the safety of the public. Traffic control warning signs and barricades shall be in strict accordance with the provisions of the Florida Department of Transportation Manual on Traffic Controls and Safety Practices for Street and Highway Construction, Maintenance and Utility Operations (latest revision). All barricades and obstructions shall be protected at night by flashing signal lights which shall be of substantial construction and suitable for night visibility. Suitable warning signs shall be so placed and illuminated at night as to show in advance where construction, barricades, or detours exist. All work items are to include the cost of signing and traffic maintenance, **except** as related to shell and base preparation over 100' or overnight.

Work shall be performed in accordance with FDOT Maintenance Of Traffice (MOT) Index 600.

http://www.fdot.gov/roadway/DS/16/IDx/00600.pdf

The Contractor shall prepare a Maintenance of Traffic plan and submit to the Project Manager for review prior to implementation. It must comply with all FDOT safety criteria, FDOT Design Standards 600 Services, Indexes (see above link). The Maintenance of Traffic Plan will require the seal of a Florida licensed Professional Engineer with a current FDOT Advance Work Zone certification if any change is made to the FDOT Index 600 Series. No road closures will be allowed without approval from the Project Manager.

C.11 PUBLIC SAFETY AND CONVENIENCE

The Contractor shall at all times so conduct his work as to insure the least possible obstruction to traffic and inconvenience to the general public and the residents in the vicinity of the work and to insure the protection of persons and property in a matter satisfactory to the County. No road or street shall be closed to the public except with the permission of the County and proper governmental authority. Fire hydrants on or adjacent to the work shall be kept accessible to fire-fighting equipment at all times.

Temporary provisions shall be made by the Contractor to insure the use of sidewalks and proper functioning of all gutters, sewer inlets, drainage ditches, and irrigation ditches. All public emergency agencies (i.e., fire, medical, police, etc.) shall be furnished a list of all street closing locations and durations at least 48 hours in advance of construction closing.

C.12 PROTECTION OF WORK, PERSONS, AND PROPERTY

The Contractor shall continuously maintain adequate protection of all work from damage and shall protect all property from injury or loss arising in connection with the contract. Contractor shall make good any such damage, injury or loss, except such as may be directly due to error in contract documents. Contractor shall provide, protect, and maintain all passageways, guard fences, lights, and other facilities required by public authority or local conditions.

Contractor shall provide reasonable maintenance of traffic ways for the public and preservation of the continuation of the County's business taking into full consideration all local conditions. Contractor shall comply with Florida Department of Commerce Safety Regulations and any local safety regulations.

C.13 CLEAN UP

The Contractor shall keep the construction site free of rubbish and waste materials and restore to their original condition those portions of the site not designated for alteration by the scope of work. Clean up and restoration shall be accomplished on a continuing basis throughout the contract period and in such a manner as to maintain a minimum of nuisance and interference to the general public and residents in the vicinity of the work. The Contractor shall remove, when no longer needed, all temporary structures and equipment used in his operations. It is the intent of this specification that the construction areas and those other areas not designated for alteration by the scope of work be restored to their original condition or as nearly as possible.

C.14 TESTING

All inspections and testing required for this contract will be performed and paid for by the Contractor through an independent laboratory retained by the County. Contractor shall be responsible for all failed tests. Please note that the Contractor is also required to provide to the County's Project Manager acceptable Testing Certifications for each pad with the appropriate invoice submittal.

C.15 CHECKLIST FOR BID SUBMITTAL

Bidder shall ensure the following documents are executed and returned with the Bid submittal.

1. Bid Form (Including Subcontractor Percentage Form), (Bid Form Page 1-6)
2. Utilization of Minority and Women Owned Businesses (MBE/WBE), (Page 7-8)
3. Section D, Bidder's Insurance Statement, (Page 8)
4. Section D, Indemnity and Hold Harmless Clause (Page 9)
5. Section E, Drug Free Work Place Certification
6. Section F, Federal Transit Administration Contract Clauses
   Article 2 - Buy America Requirements
   Article 7 - Lobbying Requirements
   Article 18- Government – Wide Debarment and Suspension (Nonprocurement)
7. Attachment A, Bidder's Questionnaire
8. Attachment B, Public Contracting and Environmental Crimes Certification
9. Attachment C, The Florida Trench Safety Act
10. Attachment D, ePayables Application
11. Attachement E, Vendor Certification Regarding Scrutinzed Companies Lists
12. Contractor's License

END OF SECTION C

SECTION D/ IFB 17-0817OV
INSURANCE AND BOND REQUIREMENTS

The Successful Bidder will not commence work under the resulting Agreement until all insurance coverages indicated herein have been obtained. The Successful Bidder shall obtain and submit to the Procurement Division within ten (10) calendar days from the date of notice of intent to award, at his expense, the following minimum amounts of insurance (inclusive of any amounts provided by an umbrella or excess policy):

Insurance / Bond Type	Required Limits
1. ☒ Automobile Liability:	Coverage must be afforded under a per occurrence policy form including coverage for all owned, hired and non-owned vehicles. $ 1,000,000 combined single limit, or $500,000 bodily injury and $500,000 property damage. Coverage must also include $10,000 Personal Injury Protection (No Fault), $500,000 Hired-Non Owned Liability and $10,000 Medical Payments. *This policy shall contain severability of interests' provisions.*
2. ☒ Commercial General Liability: (Occurrence Form - patterned after the current ISO form)	Coverage shall be afforded under a per occurrence policy form. $1,000,000 single limit per occurrence; $2,000,000 aggregate Coverage must include: $1,000.000 Products/Completed Operations Aggregate $1,000,000 Personal and Advertising Injury Liability $50,000 Fire Damage Liability $10,000 Medical Expense, and $1,000,000 Third Party Property Damage. $_____ Project Specific Aggregate (Required on projects valued at over $10,000,000) *This policy shall contain severability of interests' provisions.*
3. ☒ Employer's Liability:	$100,000 each accident $500,000 disease each employee $100,000 disease policy limit
4. ☒ Worker's Compensation:	Statutory Limits of Chapter 440, Florida Statutes, and all Federal Government Statutory Limits & Requirements. If any operations are to be undertaken on or about navigable waters, coverage must be included for the US Longshoremen & Harbor Workers Act and Jones Act. Note: Should "leased employees" be retained for any part of the project or service, the employee leasing agency shall provide evidence of workers' compensation coverage and employee liability coverage for all personnel on the worksite and in compliance with the above requirements.

Insurance / Bond Type	Required Limits
	Note: Workers' compensation coverage is a firm requirement. Elective exemptions are considered on a case-by-case basis and are approved in a very limited number of instances.
5. ☒ Other Insurance, as noted:	a. ☐ Aircraft Liability $ _____ per occurrence Coverage shall be carried in limits of not less than $5,000,000 each occurrence if applicable to the completion of the services under this Agreement. b. ☐ Installation Floater If the resulting Agreement **does not** include construction of or additions to above ground building or structures, but does involve the installation of machinery or equipment, Successful Bidder shall provide an **"Installation Floater"** with the minimum amount of insurance to be 100% of the value of such addition(s), building(s), or structure(s). c. ☐ Pollution $ _____ per occurrence d. ☐ Professional Liability and/or Errors and Omissions (E&O) Liability Professional (E&O) Liability shall be afforded for the Bodily Injury and Property Damage for not less than $_____ Each Claim, $1,000,000 Policy Aggregate. e. ☒ Builder's Risk Insurance When this contract or agreement includes the construction of roadways and/or the addition of a permanent structure or building, including the installation of machinery and/or equipment, the following insurance coverage must be afforded: Coverage Form: Completed Value, All Risk (Roadways/Buildings and Machinery/Equipment) in an amount equal to 100% of the value upon completion or the value of the equipment to be installed. Coverage should include, but not be limited to, storage and transport of materials, equipment, supplies of any kind whatsoever to be used on or incidental to the project, theft coverage, and Waiver of Occupancy Clause Endorsement, where applicable. The policy shall not carry a self-insured retention/deductible greater than $10,000.

Insurance / Bond Type	Required Limits
	f. ☐ Cyber Liability Coverage must comply with Florida Statute 501.171 and must be afforded under a per occurrence policy form for limits not less than $_____ Security Breach Liability, $_____ Security Breach Expense (each occurrence), $_____ Security Breach Expense (aggregate), $_____ Replacement or Restoration of Electronic Data, $_____ Extortion Threats, $_____ Business Income and Extra Expense, and $_____ Public Relations Expense. The policy must not carry a self-insured retention/deductible greater than $_____. g. ☐ Hazardous Materials Insurance Hazardous materials includes all materials and substances that are now designated or defined as hazardous by Florida or Federal law or by the rules of regulations of Florida or any Federal Agency. *Pollution Liability* Coverage must be afforded under a per occurrence policy form for limits not less than the value of the contract, subject to a $_____ minimum, for Bodily Injury and Property Damage to include sudden and gradual release, each claim and aggregate. *Asbestos Liability (If handling within scope of Contract)* Coverage must be afforded under a per occurrence policy form for limits not less than the value of the contract, subject to a $_____ minimum, for Bodily Injury and Property Damage to include sudden and gradual release, each claim and aggregate. *Disposal* Coverage must be afforded under a per occurrence policy form for limits not less than the value of the contract, subject to a $_____ minimum, for Liability for Sudden and Accidental Occurrences, each claim and an aggregate and not less than the value of the contract, subject to a $_____ minimum, for Liability for Non-Sudden Occurrences, each claim and aggregate. *Hazardous Waste Transportation Insurance* Coverage must be afforded under a per occurrence policy form for limits not less than the value of the contract, subject to a $_____ minimum, per accident. The Successful Bidder shall designate the hauler and have the hauler furnish a Certificate of Insurance for Automobile Liability Insurance with Endorsement MCS-90 for liability arising out of the transportation of

Insurance / Bond Type	Required Limits
	hazardous materials. The Successful Bidder must also provide the EPA Identification Number. h. ☐ Liquor Liability Coverage must be afforded under a per occurrence policy form for limits not less than $_____ Each Occurrence and Aggregate. i. ☐ Garage Keeper's Liability Coverage shall be required if the maintenance, servicing, cleaning or repairing of any County motor vehicles is inherent or implied within the provision of the contract. Coverage must be afforded under a per occurrence policy form for limits not less than equal to the full replacement value of the lot or garage. j. ☐ Bailee's Customer Coverage must be afforded under a per occurrence policy form for limits not less than equal to the full replacement value of the lot or garage. k. ☐ Watercraft $_____ per occurrence
6. ☐ Bid Bond:	A construction project over $200,000 requires a Bid Bond in the amount of 5% of the total bid offer. Bid bond shall be submitted with the sealed bid and shall include project name, location, and / or address and project number. In lieu of the bond, the bidder may file an alternative form of security in the amount of 5% of the total offer, in the form of a money order, a certified check, a cashier's check, or an irrevocable letter of credit issued to Manatee County.
7. ☒ Payment and Performance Bond:	A construction project over $100,000 requires a Payment and Performance Bond be submitted by Successful Bidder for 100% of the award amount and shall be presented to Manatee County within ten (10) calendar days of issuance of the notice of intent to award. **(If Applicable – Reference Article B.07, Invoices, Invitation for Bid Page B-2 and B-3).**

Reviewed by Risk: _____

INSURANCE REQUIREMENTS

I. THE POLICIES ARE TO CONTAIN, OR BE ENDORSED TO CONTAIN, THE FOLLOWING PROVISIONS:

Commercial General Liability and Automobile Liability Coverages

a. **"Manatee County, a Political Subdivision of the State of Florida," is to be named as an Additional Insured in respect to:** Liability arising out of activities performed by or on behalf of the Successful Bidder, his agents, representatives, and employees; products and completed operations of the Successful Bidder; or automobiles owned, leased, hired or borrowed by the Successful Bidder. The coverage shall contain no special limitation(s) on the scope of protection afforded to the County, its officials, employees or volunteers.

   In addition to furnishing a Certificate of Insurance, the Successful Bidder shall provide the endorsement that evidences Manatee County being listed as an Additional Insured. This can be done in one of two ways: (1) an endorsement can be issued that specifically lists "Manatee County, a Political Subdivision of the State of Florida," as Additional Insured; or, (2) an endorsement can be issued that states that all Certificate Holders are Additional Insured with respect to the policy.

b. The Successful Bidder's insurance coverage shall be primary insurance with respect to the County, its officials, employees and volunteers. Any insurance or self-insurance maintained by the County, its officials, employees or volunteers shall be excess of Successful Bidder's insurance and shall be non-contributory.

c. The insurance policies must be on an occurrence form.

Workers' Compensation and Employers' Liability Coverages

The insurer shall agree to waive all rights of subrogation against the County, its officials, employees and volunteers for losses arising from work performed by the Successful Bidder for the County.

II. GENERAL INSURANCE PROVISIONS APPLICABLE TO ALL POLICIES:

a. Prior to the execution of contract or issuance of a Purchase Order, and then annually upon the anniversary date(s) of the insurance policy's renewal date(s) for as long as this contract remains in effect, Successful Bidder shall furnish the County with a Certificate(s) of Insurance (using an industry accepted certificate form, signed by the Issuer, with applicable endorsements, and containing the solicitation or contract number, and title or description) evidencing the coverage set forth above and naming "Manatee County, a Political Subdivision of the State of Florida" as an Additional Insured on the applicable coverage(s) set forth above.

b. If the policy contains an aggregate limit, confirmation is needed in writing (letter, email, etc.) that the aggregate limit has not been eroded to procurement representative when supplying Certificate of Insurance.

In addition, when requested in writing from the County, Successful Bidder will provide the County with a certified copy of all applicable policies. The address where such certificates and certified policies shall be sent or delivered is as follows:

Manatee County, a Political Subdivision of the State of Florida
Attn: Risk Management Division
1112 Manatee Avenue West, Suite 969
Bradenton, FL 34205

c. The project's solicitation number and title shall be listed on each certificate.

d. Successful Bidder shall provide thirty (30) days written notice to the Risk Manager of any cancellation, non-renewal, termination, material change, or reduction in coverage of any insurance policies to procurement representative including solicitation number and title with all notices.

e. Successful Bidder agrees that should at any time Successful Bidder fail to meet or maintain the required insurance coverage(s) as set forth herein, the County may terminate this contract.

f. The Successful Bidder waives all subrogation rights against Manatee County, a Political Subdivision of the State of Florida, for all losses or damages which occur during the contract and for any events occurring during the contract period, whether the suit is brought during the contract period or not.

g. The Successful Bidder has sole responsibility for all insurance premiums and policy deductibles.

h. It is the Successful Bidder's responsibility to ensure that his agents, representatives and subcontractors comply with the insurance requirements set forth herein. Successful Bidder shall include his agents, representatives, and subcontractors working on the project or at the worksite as insured under its policies, or Successful Bidder shall furnish separate certificates and endorsements for each agent, representative, and subcontractor working on the project or at the worksite. All coverages for agents, representatives, and subcontractors shall be subject to all of the requirements set forth to the procurement representative.

i. All required insurance policies must be written with a carrier having a minimum A.M. Best rating of A- FSC VII or better. In addition, the County has the right to review the Successful Bidder's deductible or self-insured retention and to require that it be reduced or eliminated.

III. Successful Bidder understands and agrees that the stipulated limits of coverage listed herein in this insurance section shall not be construed as a limitation of any potential liability to the County, or to others, and the County's failure to request evidence of this insurance coverage shall not be construed as a waiver of Successful Bidder's obligation to provide and maintain the insurance coverage specified.

IV. The enclosed Hold Harmless Agreement shall be signed by the Successful Bidder and shall become a part of the contract.

V. Successful Bidder understands and agrees that the County does not waive its immunity and nothing herein shall be interpreted as a waiver of the County's rights, including the limitation of waiver of immunity, as set forth in Florida Statutes 768.28, or any other statutes, and the County expressly reserves these rights to the full extent allowed by law.

VI. No award shall be made until the Procurement Division has received the Certificate of Insurance and Hold Harmless Agreement in accordance with this section.

VII. BONDING REQUIREMENTS

Bid Bond/Certified Check. By submitting a bid, the bidder agrees should its bid be accepted, **to execute the form of Agreement and present the same to Manatee County for approval within ten (10) calendar days after notice of intent to award**. The bidder further agrees that failure to execute and deliver said form of Agreement **within ten (10) calendar days** will result in damages to Manatee County and as guarantee of payment of same a bid bond/certified check shall be enclosed within the submitted sealed bid in the amount of five (5%) percent of the total amount of the bid. The bidder further agrees that in case the bidder fails to enter into an Agreement, as prescribed by Manatee County, the bid bond/certified check accompanying the bid shall be forfeited to Manatee County as agreed liquidated damages. If County enters into an agreement with a bidder, or if County rejects any and/or all bids, accompanying bond will be promptly returned.

Payment and Performance Bonds. Prior to commencing work, the Successful Bidder shall obtain, for the benefit of and directed to County, a Payment and Performance Bond satisfying the requirements of Section 255.05, Florida Statutes, covering the faithful performance by the Successful Bidder of its obligation under the Contract Documents, including but not limited to the construction of the project on the project site and the payment and obligations arising thereunder, including all payments to Subcontractors, laborers, and materialmen. The surety selected by the Successful Bidder to provide the Payment and Performance Bond shall be approved by County prior to issuance of such Bond, which approval shall not be unreasonably withheld or delayed provided that surety is rated A- or better by Best's Key Guide, latest edition.

Failure to provide the required bonds on the prescribed form may result in Successful Bidder being deemed nonresponsive. Bonds must be in the form prescribed in Section 255.05, Florida Statutes, and must not contain notice, demand or other terms and conditions, including informal pre-claim meetings, not provided for in Section 255.05, Florida Statutes.

Bonds shall be in an amount equal to 100% of the contract price issued by a duly authorized and nationally recognized surety company, authorized to do business in the State of Florida, satisfactory to County. Surety shall be rated as "A-" or better by Best's Key Guide, latest edition. The attorney-in-fact who signs the bonds must file with the bonds, a certificate and effective dated copy of power-of-attorney. Payment and Performance Bonds shall be issued to Manatee County, a political subdivision of the State of Florida, **within ten (10) calendar days after issuance of notice of intent to award**.

In addition, pursuant to Section 255.05(1)(b), Florida Statutes, prior to commencing work, the Successful Bidder shall be responsible and bear all costs associated to record the Payment and Performance Bond with the Manatee County Clerk of the Circuit Court. A certified copy of said recording shall be furnished to the Procurement Division upon filing. Pursuant to Section 255.05(1)(b), Florida Statutes, County will make no payment to the Successful Bidder until the Successful Bidder has complied with this paragraph.

Furnishing Payment and Performance Bonds shall be requisite to execution of an Agreement with County. Said Payment and Performance Bonds will remain in force for the duration of the Agreement with the premiums paid by the Successful Bidder. Failure of the Successful Bidder to execute such Agreement and to supply the required bonds shall be just cause for cancellation of the award. County may then contract with the next lowest, responsive and responsible bidder or re-advertise this IFB.

Failure of County at any time to require performance by the Successful Bidder of any provisions set out in the resulting Agreement will in no way affect the right of County, thereafter, to enforce those provisions.

BIDDER'S INSURANCE STATEMENT

THE UNDERSIGNED has read and understands the aforementioned insurance and bond requirements of this IFB and shall provide the insurance and bonds required by this section within ten (10) days from the date of notice of intent to award.

Bidder Name: _____ Date: _____

Authorized Bidder's Signature: _____

Print Name: _____

Insurance Agency: _____

Agent Name: _____ Agent Phone: _____

Surety Agency: _____

Surety Name: _____ Surety Phone: _____

Please return this completed and signed statement with your bid.

Manatee County, a Political Subdivision of the State of Florida
IFB 17-0817OV, Section D – Insurance Requirement
Indemnity and Hold Harmless

Respondent shall defend, indemnify and hold harmless the County and all of the County's officers, agents, employees, and volunteers from and against all claims, liability, loss and expense, including reasonable costs, collection expenses, attorneys' fees, and court costs which may arise because of the negligence (whether active or passive), misconduct, or other fault, in whole or in part (whether joint, concurrent, or contributing), of Respondent, its officers, employees, representatives and agents in performance or non-performance of its obligations under the Contract/Agreement. Respondent recognizes the broad nature of this indemnification and hold harmless clause, as well as the provision of a legal defense to the County when necessary, and voluntarily makes this covenant and expressly acknowledges the receipt of such good and valuable consideration provided by the County in support of these indemnification, legal defense and hold harmless contractual obligations in accordance with the laws of the State of Florida. This clause shall survive the termination of this Contract/Agreement. Compliance with any insurance requirements required elsewhere within this Contract/Agreement shall not relieve Respondent of its liability and obligation to defend, hold harmless and indemnify the County as set forth in this article of the Contract/Agreement.

Nothing herein shall be construed to extend the County's liability beyond that provided in section 768.28, Florida Statutes.

PROJECT NUMBER AND/OR NAME	
INSURANCE AGENT	
RESPONDENT SIGNATURE	DATE

Acknowledgement:

STATE OF _____ COUNTY OF _____

The foregoing instrument was acknowledged before me this _____ day of _____,

20____ by _____ [YOUR FULL LEGAL NAME], who is

personally known to me or who has produced _____ as

identification.

Notary Signature _____

Print Name: _____

(seal)

Section E

Drug Free Work Place Certification

THIS FORM MUST BE SIGNED AND SWORN TO IN THE PRESENCE OF A NOTARY PUBLIC OR OTHER OFFICIAL AUTHORIZED TO ADMINISTER OATHS.

This sworn statement is submitted to the Manatee County Board of County Commissioners by _____[print individual's name and title]

_____for_____
[print name of entity submitting sworn statement]

whose business address is _____

and (if applicable) its Federal Employer Identification Number (FEIN) is _____(If the entity has no FEIN, include the Social Security Number of the individual signing this sworn statement:_____

I understand that no person or entity shall be awarded or receive a county contract for public improvements, procurement of goods or services (including professional services) or a county lease, franchise, concession or management agreement, or shall receive a grant of county monies unless such person or entity has submitted a written certification to the County that it will provide a drug free work place by:

(1) providing a written statement to each employee notifying such employee that the unlawful manufacture, distribution, dispensation, possession or use of a controlled substance as defined by •893.02(4), Florida Statutes, as the same may be amended from time to time, in the person's or entity's work place is prohibited specifying the actions that will be taken against employees for violation of such prohibition. Such written statement shall inform employees about:

(i) the dangers of drug abuse in the work place;

(ii) the person's or entity's policy of maintaining a drug free environment at all its work places, including but not limited to all locations where employees perform any task relating to any portion of such contract, business transaction or grant;

(iii)..any available drug counseling, rehabilitation, and employee assistance programs; and

(iv) the penalties that may be imposed upon employees for drug abuse violations.

(2) Requiring the employee to sign a copy of such written statement to acknowledge his or her receipt of same and advice as to the specifics of such policy. Such person or entity shall retain the statements signed by its employees. Such person or entity shall also post in a prominent place at all of its work places a written statement of its policy containing the foregoing elements (i) through (iv).

(3) Notifying the employee in the statement required by subsection (1) that as a condition of employment the employee will:

(i) abide by the terms of the statement; and

(ii) notify the employer of any criminal drug statute conviction for a violation occurring in the work place no later than five (5) days after such a conviction.

(4) Notifying the County within ten (10) days after receiving notice under subsection (3) from an employee or otherwise receiving actual notice of such conviction.

(5) Imposing appropriate personnel action against such employee up to and including termination; or requiring such employee to satisfactorily participate in a drug abuse assistance or rehabilitation program approved for such purposes by a federal, state, or local health, law enforcement, or other appropriate agency.

(6) Making a good faith effort to continue to maintain a drug free work place through implementation of sections (1) through (5) stated above.

I UNDERSTAND THAT THE SUBMISSION OF THIS FORM TO THE CONTRACTING OFFICER FOR MANATEE COUNTY IS VALID THROUGH DECEMBER 31 OF THE CALENDAR YEAR IN WHICH IT IS FILED. I ALSO UNDERSTAND THAT ANY CONTRACT OR BUSINESS TRANSACTION SHALL PROVIDE FOR SUSPENSION OF PAYMENTS, OR TERMINATION, OR BOTH, IF THE CONTRACTING OFFICER OR THE COUNTY ADMINISTRATOR DETERMINES THAT:

(1) Such person or entity has made false certification.

(2) Such person or entity violates such certification by failing to carry out the requirements of sections (1), (2), (3), (4), (5), or (6) or subsection 3-101(7)(B); or

(3) Such a number of employees of such person or entity have been convicted of violations occurring in the work place as to indicate that such person or entity has failed to make a good faith effort to provide a drug free work place as required by subsection 3-101(7)(B).

_____
[Signature]

STATE OF FLORIDA
COUNTY OF_____

Sworn to and subscribed before me this_____day of_____, 20_____

Personally known_____OR Produced identification _____
[Type of identification]

_____My commission expires_____
Notary Public Signature

_____
[Print, type or stamp Commissioned name of Notary Public

FEDERAL TRANSIT ADMINISTRATION CONTRACT CLAUSES

INDEX

(REF: IFB 17-0817OV) – MCAT 2017 Construction of ADA Compliant Bus Stop Landing Pads, Walkways, Sidewalks, Shelter Pads and Bench Pads Project (Manatee County, FL)

FEDERAL TRANSIT ADMINISTRATION (FTA) CONTRACT CLAUSES

1. FLY AMERICA REQUIREMENT

49 U.S.C. §40118
41 CFR Part 301-10

Applicable to: *Contracts that have transportation of persons or property, by air, between a place in the U.S. and a place outside the U.S., or between places outside the U.S., when the FTA will participate in the costs of such air transportation.*

2. BUY AMERICA REQUIREMENTS

49 U.S.C. 5323 (j)
49 C.F.R. Part 661

Applicable to: *Construction contracts and acquisition of goods or rolling stock (valued at more than $100,000).*

The Contractor agrees to comply with 49 U.S.C. 5323(j) and 49 C.F.R. Part 661, which provide that Federal Funds may not be obligated unless steel, iron and manufactured products used in FTA-funded projects are produced in the United States, unless a waiver has been granted by FTA or the product is subject to a general waiver. General waivers are listed in 49 C.F.R. 661.7, and include final assembly in the United States for 15 passenger vans and 15 passenger wagons produced by Chrysler Corporation, and microcomputer equipment and software. Separate requirements for rolling stock are set out at 49 U.S.C. 5323(j)(2)(C) and 49 C.F.R. 661.11. Rolling stock must be assembled in the United States and have a 60 percent domestic content.

A bidder or offeror must submit to the FTA recipient the appropriate Buy America certification (below) with all bids or offers on FTA-funded contracts except those subject to a general waiver. Bids or offers that are not accompanied by a completed Buy America certification must be rejected as nonresponsive. This requirement does not apply to lower tier subcontractors. Bids that are not accompanied by a completed Buy America certification shall be rejected as nonresponsive. This requirement does not apply to lower tier subcontractors.

Certification requirement for procurement of steel, iron, or manufactured products.

Certificate of Compliance with 39 U.S.C. 5323(j) (1)

The bidder or offer hereby certifies that it will meet the requirements of 49 U.S.C. 5323(j) (1) and the applicable regulations in 49 C.F.R. Part 661.5.

Date: _____

Signature: _____

Company Name: _____

Title: _____

Certificate of Non-Compliance with 49 U.S.C. 5323 (j) (1)

The bidder or offeror herby certifies that it cannot comply with the requirements of 49 U.S. C. 5323 (j) (1) and 49 C.F.R. 661.5 but it may qualify for an exception pursuant to 49 U.S.C. 5323 (j) (2) (A), 5323 (j) (2) (B), or 5323 (j) (2) (D), and 49 C.F.R. 661.7.

Date: _____

Signature: _____

Company Name: _____

Title: _____

Certification requirement for procurement of buses, other rolling stock and associated equipment.

Certificate of Compliance with 49 U.S. C. 5323 (j) (2) (C).

The bidder or offeror hereby certifies that it will comply with the requirements of 49 U.S.C. 5323 (j) (2) (C) and the regulations 49 C.F.R. Part 661.11.

Date: _____

Signature: _____

Company Name: _____

Title: _____

Certificate of Non-Compliance with 49 U.S.C. 5323 (j) (2) (C)

The bidder or offeror hereby certifies that it cannot comply with the requirements of 49 U.S.C. 5323 (j) (2) (C) and 49 C.F.R. 661.11 but may qualify for an exception pursuant to 49 U.S.C. 5323 (j) (2) (A), 5323 (j) (2) (B), or 5323 (j) (2) (D), and 49 CFR 661.7.

Date: _____

Signature: _____

Company Name: _____

Title: _____

3. CARGO PREFERENCE REQUIREMENTS

46 U.S.C. 1241
46 CFR Part 381

Applicable to: *All contracts involving equipment, materials, or commodities which may be transported by ocean vessels.*

4. SEISMIC SAFETY REQUIREMENTS

42 U.S.C. 7701 ET SEQ 49
CFR Part 41

Applicable to: *Only to construction of new buildings or additions to existing buildings*

5. ENERGY CONSERVATION REQUIREMENT

42 U.S.C. 6321 et seq.
49 CFR Part 18

Applicable to: *All Contracts*

The Contractor agrees to comply with mandatory standards and policies relating to energy efficiency which are contained in the state energy conservation plan issued in compliance with the Energy Policy and Conservation Act.

6. CLEAN WATER REQUIREMENTS

33 U.S.C. 1251

Applicable to*: All contracts and subcontracts which exceed $100,000*

The Contractor (1) agrees to comply with all applicable standards, orders or regulations issued pursuant to the Federal Water Pollution Control Act, as amended, 33 U.S.C. 1251 et seq. The Contractor agrees to report each violation to the County and understands and agrees that the County will, in turn report each violation as required to assure notification to FTA and the appropriate EPA Regional Office.

(2) The Contractor also agrees to include these requirements in each subcontract exceeding $100,000 financed in whole or in part with Federal assistance provided by FTA.

7. LOBBYING

31 U.S.C. 1352
49 CFR Part 19
49 CFR Part 20

(To be submitted with each bid or offer exceeding $100,000)

Applicable to Contracts*:*

The Lobbying requirements apply to Construction/Architectural and Engineering Acquisition of Rolling Stock/Professional Service Contract/Operational Service Contract/Turnkey contracts.

The Lobbying requirements mandate the maximum flow down, pursuant to Byrd Anti-Lobbying Amendment, 31 U.S.C. § 1352(b)(5) and 49 C.F.R. Part 19, Appendix A, Section 7.

Clause and specific language therein are mandated by 49 CFR Part 19, Appendix A.

Modifications have been made to the Clause pursuant to Section 10 of the Lobbying Disclosure Act of 1995, P.L. 104-65 [to be codified at 2 U.S.C. § 1601, et seq.]

-Lobbying Certification and Disclosure of Lobbying Activities for third party Contractors are mandated by 31 U.S.C. 1352(b)(5), as amended by Section 10 of the Lobbying Disclosure Act of 1995, and DOT implementing regulation, "New Restrictions on Lobbying," at 49 CFR § 20.110(d)

-Language in Lobbying Certification is mandated by 49 CFR Part 19, Appendix A, Section 7, which provides that Contractors file the certification required by 49 CFR Part 20, Appendix A.

Modifications have been made to the Lobbying Certification pursuant to Section 10 of the Lobbying Disclosure Act of 1995.

-Use of "Disclosure of Lobbying Activities," Standard Form-LLL set forth in Appendix B of 49 CFR Part 20, as amended by "Government wise Guidance For New Restrictions on Lobbying," 61 Fed. Reg. 1413 (1/19/96) is mandated by 49 CFR Part 20, Appendix A.

Byrd Anti-Lobbying Amendment, 31 U.S. C. 1352 as amended by the Lobbying Disclosure Act of 1995, P. L. 104-65 [to be codified at 2 U.S.C. §1601, et seq.] Contractors who apply or bid for an award of $100,000 or more shall file the certification required by 49 CFR part 20, "New Restrictions on Lobbying." Each tier certifies to the tier above that it will not and has not used Federal appropriated funds to pay any person or organization for influencing or attempting to influence an officer or employee of an agency, a member of Congress, officer or employee of Congress, or an employee of a member of Congress in connection with obtaining any Federal contract, grant or any other award covered by 31 U.S.C. 1352. Each tier shall also disclose the name of any registrant under the Lobbying Disclosure Act of 1995 who has made lobbying contacts on behalf with non-Federal funds with respect to that Federal contract, grant or award covered by 31 U.S.C. 1352. Such disclosures are forwarded from tier to tier up to the recipient.

APPENDIX A, 49 CFR PART 20 – CERTIFICATION REGARDING LOBBYING

Certification for Contracts, Grants, Loans and Cooperative Agreements

(To be submitted with each bid or offer exceeding $100,000)

The undersigned [Contractor] certifies, to the best of his or her knowledge and belief, that:

(1) No Federal appropriated funds have been paid or will be paid, by or on behalf of the undersigned, to any person for influencing or attempting to influence an officer or employee of an agency, a Member of Congress, an officer or employee of Congress, or an employee of a Member of Congress in connection with the awarding of any Federal contract, the making of any Federal grant, the making of any Federal loan, the entering into of any cooperative agreement and the extension, continuation, renewal,

amendment, or modification of any Federal contract, grant, loan, or cooperative agreement.

(2) If any funds other than Federal appropriated funds have been paid or will be paid to any person for making lobbying contacts to an officer or employee of any agency, a Member of Congress, an officer or employee of Congress, or an employee of a Member of Congress in

connection with this Federal contract, grant, loan, or cooperative agreement, the undersigned shall complete and submit Standard Form—LLL, "Disclosure Form to Report Lobbying," in accordance with its instructions [as amended by "Government wide Guidance for New Restrictions on Lobbying," 61 Fed. Reg. 1413 (1/19/96). Note: Language in paragraph (2) herein has been modified in accordance with Section 10 of the Lobbying Disclosure Act of 1995 (P.L. 104-65, to be codified at 2 U.S.C. 1601, *et seq.*)]

(3) The undersigned shall require that the language of this certification be included in the award documents for all subawards at all tiers (including subcontracts, subgrants, and contract under grants, loans, and cooperative agreements) and that all subrecipients shall certify and disclose accordingly.

This certification is a material representation of fact upon which reliance was placed when this transaction was made or entered into. Submission of this certification is prerequisite for making or entering into this transaction imposed by 31, U.S.C. § 1352 (as amended by the Lobbying Disclosure Act of 1995). Any person who fails to file the required certification shall be subject to a civil penalty of not less than $10,000 and not more than $100,000 for each such failure.

[Note: Pursuant to 31 U.S.C. § 1352(c)(1)-(2)(A), any person who makes a prohibited expenditure or fails to file or amend a required certification or disclosure form shall be subject to a civil penalty of not less than $10,000 and not more than $100,000 for each expenditure or failure.]

The Contractor, _____, certifies or affirms the truthfulness and accuracy of each statement of its certification and disclosure, if any. In addition, the Contractor understands and agrees that the provisions of 31 U.S.C. A3801, et seq., apply to this certification and disclosure, if any.

_____Signature of Contractor's Authorized Official

_____Name and Title of Contractor's Authorized Official

_____Date

8. ACCESS TO RECORDS AND REPORTS

49 U.S.C. 5325
18 CFR 18.36 (i)
49 CFR 633.17

Applicable to: *Contracts as described below*

(1) Where the Purchaser is not a State but a local government and is the FTA Recipient or a subgrantee of the FA Recipient in accordance with 49 C.F.R. 18.36(i), The Contractor agrees to provide the Purchaser, the FTA Administrator, the Comptroller General of the

United States or any of their authorized representatives access to any books, documents, papers and records of the Contractor which are directly pertinent to this contract for the purposes of making audits, examinations, excerpts and transcriptions. Contractor also agrees, pursuant to 49 C.F.F. 633.17 to provide the FTA Administrator or his authorized representatives including any PMO Contractor access to Contractor's records and construction sites pertaining to a major capital project, defined at 49 U.S.C. 5302 (a) 1, which is receiving federal financial assistance through the programs described at 49 U.S.C. 5307, 5309, or 5311.

(2) Where the Purchaser is a State and is the FTA Recipient or a subgrantee of the FTA Recipient in accordance with 49 C.F.R. 633.17, Contractor agrees to provide the Purchaser, the FTA Administrator or his authorized representative, including any PMO Contractor, access to the Contractor's records and construction sites pertaining to a major capital project, defined at 49 U.S.C. 5307, 5309 or 5311. By definition, a major capital project excludes contracts of less than the simplified acquisition threshold currently set at $100,000.

(3) Where the Purchaser enters into a negotiated contract for other than a small purchase or under the simplified acquisition threshold and is an institution of higher education, a hospital or other non-profit organization and is the FTA Recipient or a subgrantee of the FTA Recipient in accordance with 49 C.F. R. 1948, Contractor agrees to provide the Purchaser, FTA Administrator, the Comptroller General of the United States or any of their duly authorized representatives with access to any books, documents, papers and record of the Contractor which are directly pertinent to this contract for the purposes of making audits, examinations, excerpts and transcriptions.

(4) Where any Purchaser which is the FTA Recipient or a subgrantee of the FTA Recipient in accordance with 49 U.S.C. 5325(a) enters into a contract for a capital project or improvement (defined at 49 U.S.C. 5302(a)1) through other than competitive bidding, the Contractor shall make available records related to the contract to the Purchaser, the Secretary of Transportation and the Comptroller General or any authorized officer or employee of any of them for the purposes of conducting an audit and inspection.

(5) The Contractor agrees to permit any of the foregoing parties to reproduce by any means whatsoever or to copy excerpts and transcriptions as reasonably needed.

(6 The Contractor agrees to maintain all books, records, accounts and reports required under this contract for a period of not less than three (3) years after the termination or expiration of this contract, except in the event of litigation or settlement of claims arising from the performance of this contract, in which case Contractor agrees to maintain same until the Purchaser, the FTA Administrator, the Comptroller General, or any of their duly authorized representatives, have disposed of all such litigation, appeals, claims or exceptions related thereto. Reference 49 CFR 18.39(i)(11).

(7) FTA does not require the inclusion of these requirements in subcontracts.

Requirement for Access to Records and Reports by Types of Contractors

Contract Characteristics	Operational Service Contract	Turnkey	Construction	Architectural Engineering	Acquisition of Rolling Stock	Professional Services
I. State Grantees a.Contracts below SAT ($100,000) b.Contracts above ($100,000 / Capital Projects)	None None unless non-competitive award (1)	Those imposed on state pass thru to Contractor	None Yes, if non-competitive award or if funded thru(2) 5307/5311	None None unless non-competitive award	None None unless non-competitive award	None None unless non-competitive award
II. Non State Grantees						
a.Contractors below SAT ($100,000)	Yes (3)	Those imposed on non-state Grantee pass thru to Contractor	Yes	Yes	Yes	Yes
b.Contractors above ($100,000 / Capital Projects)	Yes (3)		Yes	Yes	Yes	Yes

Sources of Authority
(1) 49 USC 5325 (a)
(2) 49 CFR 633.17
(3) 18 CFR 18.36 (i)

9. FEDERAL CHANGES

49 CFR Part 18

Applicable to: *All contracts*

The Contractor shall at all times comply with all applicable FTA regulations, policies, procedures and directives, including without limitation those listed directly or by reference in the Master Agreement between the County and FTA, as they may be amended or promulgated from time to time during the term of this contract. Contractor's failure to so comply shall constitute a material breach of this contract.

10. BONDING REQUIREMENTS

For Bonding requirements, refer to Manatee County's bonding requirements for bid guaranty, payment and performance bonds which is made a part of this Invitation for Bid OR Request for Proposal.

11. Clean Air

42 U.S.C. 7401 ET SEQ
40 CFR 15.61
49 CFR Part 18

Applicable to: *All contracts exceeding $100,000*

(1) The Contractor agrees to comply with all applicable standards, orders or regulations issued pursuant to the Clean Air Act, as amended, 42 U.S.C. §§ 7401 et seq. The Contractor agrees to report each violation to the County and understands and agrees that the County will, in turn, report each violation as required to assure notification to FTA and the appropriate EPA Regional office.

(2) The Contractor also agrees to include these requirements in each subcontract exceeding $100,000 financed in whole or in part with Federal assistance provided by FTA.

12. RECYCLED PRODUCTS

42 U.S.C. 6962
40 CFR 247
Executive Order 12873

Applicable to: *The Recycled Products requirements apply to all contracts for items designated by the EPA, when the purchaser or contractor procures $10,000 or more of these items during the fiscal year, or has procured $10,000 or more of such items in the previous fiscal year, using Federal funds. These regulations apply to all procurement actions involving items designed by the EPA, where the procuring agency purchases $10,000 or more of one of these items in a fiscal year, or when the cost of such items purchased during the previous fiscal year was $10,000.*

Recovered Materials - The Contractor agrees to comply with all requirements of Section 6002 of the Resource Conservation and Recovery ACT (RCRA), as amended (42 U.S.C. 6962) including but not limited to the regulatory provisions of 40 CFR Part 247, and Executive Order 12873, as they apply to the procurement of the items designated in Subpart B of 40 CFR Part 247.

13. DAVIS-BACON AND COPELAND ANTI-KICKBACK ACTS

Applicable to: *Construction contracts over $2000 for Davis-Bacon Act*
Applicable to: *Construction contractors over $100,000 for Copeland Anti-Kickback Act*

Background and Application
The Davis-Bacon and Copeland Acts are codified at 40 USC 3141, *et seq.* and 18 USC874. The Acts apply to grantee construction contracts and subcontracts that "at least partly are financed by a loan or grant from the Federal Government." 40 USC 3145(a), 29 CFR 5.2(h), 49 CFR18.36(i)(5). The Acts apply to any construction contract over $2,000. 40 USC 3142(a), 29 CFR 5.5(a). 'Construction,' for purposes of the Acts, includes "actual construction, alteration and /or repair, including painting and decorating." 29 CFR 5.5 (a). The requirements of both Acts are incorporated into a single clause (*see* 29 CFR 3.11) enumerated at 29 CFR 5.5(a) and reproduced below.

The clause language is drawn directly from 29 CFR 5.5(a) and any deviation from the model clause should be coordinated with counsel to ensure the Acts' requirements are satisfied.

Clause Language
Davis-Bacon and Copeland Anti-Kickback Acts:
(1) Minimum wages – (i) All laborers and mechanics employed or working upon the site of the work (or under the United States Housing Act of 1937 or under the Housing Act of 1949 in the construction or development of the project), will be paid unconditionally and not less often than once a week, and without subsequent deduction or rebate on any account (except such payroll deductions as are permitted by regulations issued by the Secretary of Labor under the Copeland Act (29 CFR part 3), the full amount of wages and bona fide fringe benefits (or cash equivalents therof) due at time of payment computed at rates not less than those contained in the wage determination of the Secretary of Labor which is attached hereto and made a part hereof, regardless of any contractual relationship which may be alleged to exist between the contractor and such laborers and mechanics.

Contributions made or costs reasonably anticipated for bona fide fringe benefits under section 1(b)(2) of the Davis-Bacon Act on behalf of laborers or mechanics are considered wages paid to such laborers or mechanics, subject to the provisions of paragraph (1) (iv) of this section; also, regular contributions made or costs incurred for more than a weekly period (but not less often than quarterly) under plans, funds, or programs which cover the particular weekly period, are deemed to be constructively made or incurred during such weekly period. Such laborers and mechanics shall be pad the appropriate wage rate and fringe benefits on the wage determination for the classification of work actually performed, without regard to skill, except as provided in 29 CFR Part 5.5(a)(4). Laborers or mechanics performing work in more than one classification may be compensated at the rate specified for each classification for the time actually worked therein: Provided that the employer's payroll records accurately set forth the time spent in each classification in which work is performed. The wage determination (including any additional classifications and wage rates conformed under paragraph (1)(ii) of this section) and the Davis-Bacon poster (WH-1321) shall be posted at all times by the contractor and its subcontractors at the site of work in a prominent and accessible place where it can be easily seen by the workers.

(ii)(A) The contracting officer shall require that any class of laborers or mechanics, including helpers, which is not listed in the wage determination and which is to be employed under the contract shall be classified in conformance with the wage determination. The contracting officer shall approve an additional classification and wage rate and fringe benefits therefore only when the following criteria have been met:

(1) Except with respect to helpers as defined as 29 CFR 5.2(n)(4), the work to be performed by the classification requested is not performed by a classification in the wage determination; and

(2) The classification is utilized in the area by the construction industry; and

(3) The proposed wage rate, including any bona fide fringe benefits, bears a reasonable relationship to the wage rates contained in the wage determination; and

(4) With respect to helpers as defined in 29 CFR 5.2(n)(4), such a classification prevails in the area in which the work is performed.

(B) If the contractor and the laborers and mechanics to be employed in the classification (if known), or their representatives, and the contracting officer agree on the classification and wage rate (including the amount designated for fringe benefits where appropriate), a report of the action taken shall be sent by the contracting officer to the Administrator of the Wage and Hour Division, Employment Standards Administration, U.S. Department of Labor, Washington, DC 20210. The Administration, or an authorized representative, will approve, modify, or disapprove every additional classification action within 30 days of receipt and so advise the contracting officer or will notify the contracting officer within the 30-day period that additional time is necessary.

(C) In the event the contractor, the laborers or mechanics to be employed in the classification or their representatives, and the contracting officer do not agree on the proposed classification and wage rage (including the amount designated for fringe benefits, where appropriate), the contracting officer shall refer the questions, including the views of all interested parties and the recommendation of the contracting officer, to the Administrator for determination. The Administrator, or an authorized representative, will issue a determination within 30 days of receipt and so advise the contracting officer or will notify the contracting officer within the 30-day period that additional time is necessary.

(D) The wage rate (including fringe benefits where appropriate) determined pursuant to paragraphs (a)(1)(ii) (B) or (C) of this section, shall be paid to all workers performing work in the classification under this contract from the first day on which work is performed in the classification.

(iii) Whenever the minimum wage rate prescribed in the contract for a class of laborers or mechanics includes a fringe benefit which is not expressed as an hourly rate, the contractor shall either pay the benefit as stated in the wage determination or shall pay another bona fide fringe benefit or an hourly cash equivalent thereof.

(iv) If the contractor does not make payments to a trustee or other third person, the contractor may consider as part of the wages of any laborer or mechanic the amount of any costs reasonably anticipated in providing bona fide fringe benefits under a plan or program, Provided, That the Secretary of Labor has found, upon the written request of the contractor, that the applicable standards of the Davis-Bacon Act have been met. The Secretary of Labor may require the contractor to set aside in a separate account assets for the meeting of obligations under the plan or program.

(v)(A) The contracting officer shall require that any class of laborers or mechanics which is not listed in the wage determination and which is to be employed under the contract shall be classified in conformance with the wage determination. The contracting officer shall approve an additional classification and wage rate and fringe benefits therefore only when the following criteria have been met:

(1) The work to be performed by the classification requested is not performed by a classification in the wage determination; and

(2) The classification is utilized in the area by the construction industry; and

(3) The proposed wage rate, including any bona fide fringe benefits, bears a reasonable relationship to the wage rates contained in the wage determination.

(B) If the contractor and the laborers and mechanics to be employed in the classification (if known), or their representatives, and the contracting officer agree on the classification and wage rate (including the amount designated for fringe benefits where appropriate), a report of the action taken shall be sent by the contracting officer to the Administrator of the Wage and Hour Division, Employment Standards Administration, Washington, DC 20210. The Administrator, or an authorized representative, will approve, modify, or disapprove every additional classification action within 30 days of receipt and so advise the contracting officer or will notify the contracting officer within the 30-day period that additional time is necessary.

(C) In the event the contractor, the laborers or mechanics to be employed in the classification or their representatives, and the contracting officer do not agree on the proposed classification and wage rate (including the amount designated for fringe benefits, where appropriate), the contracting officer shall refer the questions, including the views of all interested parties and the recommendation of the contracting officer, to the Administrator for determination. The Administrator, or an authorized representative, will issue a determination within 30 days of receipt and so advise the contracting officer or will notify the contracting officer within the 30-day period that additional time is necessary.

(D) The wage rate (including fringe benefits where appropriate) determined pursuant to paragraphs (a) (1) (v) (B) or (C) of this section, shall be paid to all workers performing work in the classification under this contract from the first day on which work is performed in the classification.

(2) Withholding – **The County** shall upon its own action or upon written request of an authorized representative of the Department of Labor withhold or cause to be withheld from the contractor under this contract or any other Federal contract with the same prime contractor, or any other federally-assisted contract subject to Davis-Bacon prevailing wage requirements, which is held by the same prime contractor, so much of the accrued payments or advances as

may be considered necessary to pay laborers and mechanics, including apprentices, trainees, and helpers, employed by the contractor or any subcontractor the full amount of wages required by the contract. In the event of failure to pay any laborer or mechanic, including any apprentice, trainee, or helper, employed or working on the site of the work (or under the United States Housing Act of 1937 or under the Housing Act of 1949 in the construction or development of the project), all of part of the wages required by the contract, the County may, after written notice to the contractor, sponsor, applicant, or owner, take such action as may be necessary to cause the suspension of any further payment, advance, or guarantee of funds until such violations have ceased.

(3) Payrolls and basic records – (i) Payrolls and basic records relating thereto shall be maintained by the contractor during the course of the work and preserved for a period of three years thereafter for all laborers and mechanics working at the site of the work (or under the United States Housing Act of 1937), or under the Housing Act of 1949, in the construction or development of the project). Such records shall contain the name, address, and social security number of each such worker, his or her correct classification, hourly rates of wages paid (including rates of contributions or costs anticipated for bona fide fringe benefits or cash equivalents thereof of the types described in section 1 (b) (2) (B) of the Davis-Bacon Act), daily and weekly number of hours worked, deductions made and actual wages paid. Whenever the Secretary of Labor has found under 29 CFR 5.5(a) (1) (iv) that the wages of any laborer or mechanic include the amount of any costs reasonably anticipated in providing benefits under a plan or program described in section 1 (b)(2) (B) of the Davis-Bacon Act, the contractor shall maintain records which show that the commitment to provide such benefits is enforceable, that the plan or program is financially responsible, and that the plan or program has been communicated in writing to the laborers or mechanics affected, and records which show the costs anticipated or the actual cost incurred in providing such benefits.

Contractors employing apprentices or trainees under approved programs shall maintain written evident of the registration of apprenticeship programs and certification of trainee programs, the registration of the apprentices and trainees, and the ratios and wage rates prescribed in the applicable programs.

(ii)(A) The contractor shall submit weekly for each week in which any contract work is performed a copy of all payrolls to the **County** for the transmission to the Federal Transit Administration. The payrolls submitted shall set out accurately and completely all of the information required to be maintained under section 5.5(a)(3)(i) of Regulations, 29 CFR part 5. This information may be submitted in any form desired. Optional Form WH-347 is available for this purpose and may be purchased from the Superintendent of Documents (Federal Stock Number 029-005-0014-1), U.S. Government Printing Office, Washington, DC 20402. The prime contractor is responsible for the submission of copies of payrolls by all subcontractors.

(B) Each payroll submitted shall be accompanied by a "Statement of Compliance," signed by the Contractor or subcontractor or his or her agent who pays or supervises the payment of the persons employed under the contract and shall certify the following:

(1) That the payroll for the payroll period contains the information required to be maintained under section 5.5(a) (3) (i) of Regulations, 29 CFR part 5 and that such information is correct and complete:

(2) That each laborer or mechanic (including each helper, apprentice, and trainee) employed on the contract during the payroll period has been paid the full weekly wages earned, without rebate, either directly or indirectly, and that no deductions have been made either directly or indirectly from the full wages earned, other than permissible deductions as set forth in Regulations, 29 CFR part 3;

(3) That each laborer or mechanic has been paid not less than the applicable wage rates and fringe benefits or cash equivalents for the classification of work performed, as specified in the applicable wage determination incorporated into the contract.

(C) The weekly submission of a property executed certification set forth on the reverse side of Optional Form WH-347 shall satisfy the requirement for submission of the "Statement of Compliance" required by paragraph (a) (3) (ii) (B) of this section.

(D) The falsification of any of the above certifications may subject the contractor or subcontractor to civil or criminal prosecution under section 1001 of title 18 and section 231 of title 31 of the United States Code.

(iii) The contractor or subcontractor shall make the records required under (a) (3) (i) of this section available for inspection, copying, or transcription by authorized representatives of the Federal Transit Administration or the Department of Labor and shall permit such representatives to interview employees during working hours on the job. If the contractor or subcontractor fails to submit the required records or to make them available, the Federal agency may, after written notice to the contractor, sponsor, applicant, or owner, take such action as may be necessary to cause the suspension of any further payment, advance, or guarantee of funds. Furthermore, failure to submit the required records upon request or to make such records available may be grounds for debarment action pursuant to 29 CFR 5.12.

(4) Apprentices and Trainees – (i) Apprentices – Apprentices will be permitted to work at less than the predetermined rate for the work they performed whey they are employed pursuant to and individually registered in a bona fide apprenticeship program registered with the U.S. Department of Labor, Employment and Training Administration, Bureau of Apprenticeship and Training, or with a State Apprenticeship Agency recognized by the Bureau, or if a person is employed in his or her first 90 days of probationary employment as an apprentice in such an apprenticeship program, who is not individually registered in the program, but who has been certified by the Bureau of Apprenticeship and Training or a State Apprenticeship Agency (where appropriate) to be eligible for probationary employment as an apprentice. The allowable ratio of apprentices to journeymen on the job site in any craft classification shall not be greater than the ratio permitted to the contractor as to the entire work force under the registered program. Any worker listed on a payroll at an apprentice wage rate, who is not registered or otherwise employed as stated above, shall be paid not less than the applicable wage rate on the wage determination for the classification of work actually performed. In addition, any apprentice performing work on the job site in excess of the ratio permitted under the registered program shall be paid not less than the applicable wage rate on the wage determination for the work actually performed.

Where a contractor is performing construction on a project in a locality other than that in which its program is registered, the ratios and wage rates (expressed in percentages of the journeyman's hourly rate) specified in the contractor's or subcontractor's registered program shall be observed. Every apprentice must be paid at not less than the rate specified in the registered program for the apprentice's level of progress, expressed as a percentage of the journeymen hourly rate specified in the applicable wage determination. Apprentices shall be paid fringe benefits in accordance with the provisions of the apprenticeship program. If the apprenticeship program does not specify fringe benefits, apprentices must be paid the full amount of fringe benefits listed on the wage determination for the applicable classification. If the Administrator of the Wage and Hour Division of the U.S. Department of Labor determines that a different practice prevails for the applicable apprentice classification, fringes shall be paid in accordance with that determination. In the event the Bureau of Apprenticeship and Training, or a State Apprenticeship Agency recognized by the Bureau, withdraws approval of an apprenticeship program, the contractor will no longer be permitted to utilize apprentices at less than the applicable predetermined rate for the work performed until an acceptable program is approve.

(ii) Trainees – Except as provided in 29 CFR 5.16, trainees will not be permitted to work at less than the predetermined rate for the work performed unless they are employed pursuant to and individually registered in a program which has received prior approval, evidenced by formal certification by the U.S. Department of Labor, Employment and Training Administration. The ratio of trainees to journeymen on the job site shall not be greater than permitted under the plan approved by the Employment and Training Administration. Every trainee must be paid at not less than the rate specified in the approved program for the trainee's level of progress, expressed as a percentage of the journeyman hourly rate specified in the applicable wage determination. Trainees shall be paid fringe benefits in accordance with the provisions of the trainee program. If the trainee program does not mention fringe benefits, trainees shall be paid the full amount of fringe benefits listed on the wage determination unless the Administrator of the Wage and Hour Division determines that there is an apprenticeship program associated with the corresponding journeyman wage rate on the wage determination which provides for less than full fringe benefits for apprentices.

Any employee listed on the payroll at a trainee rate who is not registered and participating in a training plan approved by the Employment and Training Administration shall be paid not less than the wage rate on the wage determination for the classification of work actually performed. In addition, any trainee performing work on the job site in excess of the ratio permitted under the registered program shall be paid not less than the applicable wage ratio on the wage determination for work actually performed. In the event the Employment and Training Administration withdraws approval of a training program, the contractor will no longer be permitted to utilize trainees at less than the applicable predetermined rate for the work performed until an acceptable program is approved.

(iii) Equal employment opportunity – The utilization of apprentices, trainees and journeymen under this part shall be in conformity with the equal employment opportunity requirements of Executive Order 11246, as amended, and 29 CFR part 30.

(5) Compliance with Copeland Act requirements – The contractor shall comply with the requirements of 29 CFR part 3, which are incorporated by reference in this contract.

(6) Subcontracts – The contractor or subcontractor shall insert in any subcontracts the clauses contained in 29 CFR 5.5 (a) (1) through (10) and such other clauses as the Federal Transit Administration may by appropriate instructions require, and also a clause requiring the subcontractors to include these clauses in any lower tier subcontracts. The prime contractor shall be responsible for the compliance by any subcontractor or lower tier subcontractor with all the contract clauses in 29 CFR 5.5.

(7) Contract termination: debarment – A breach of the contract clause in 29 CFR 5.5 may be grounds for termination of the contract, and for debarment as a contractor and a subcontractor as provided in 29 CFR 5.12.

(8) Compliance with Davis-Bacon and Related Act requirements – All rulings and interpretations of the Davis-Bacon and Related Acts contained in 29 CFR parts 1, 2 and 5 are herein incorporated by reference in this contract.

(9) Disputes concerning labor standards – Disputes arising out of the labor standards provisions of this contract shall not be subject to the general disputes clause of this contract. Such disputes shall be resolved in accordance with the procedures of the Department of Labor set forth in 29 CFR parts 5, 6 and 7. Disputes within the meaning of this clause include disputes between the contractor (or any of its subcontractors) and the contracting agency, the U.S. Department of Labor, or the employees or their representatives.

(10) Certification of eligibility – (i) By entering into this contract, the contractor certifies that neither it (nor he or she) nor any person or firm who has an interest in the contractor's firm is a person or firm ineligible to be awarded Government contracts by virtue of section 3(a) of the Davis-Bacon Act or 29 CFR 5.12 (a) (1).

(ii) No part of this contract shall be subcontracted to any person or firm ineligible for award of a Government contract by virtue of section 3(a) of the Davis-Bacon Act or 29 CFR 5.12(a)(1).

(iii) The penalty for making false statements is prescribed in the U.S. Criminal Code, 18 U.S.C 1001.

14. CONTRACT WORK HOURS AND SAFETY STANDARDS ACT

Background and Application

The Contract Work Hours and Safety Standards Act is codified at 40 USC 3701, *et seq.* The Act applies to grantee contracts and subcontracts "financed at least in part by loans or grants from … the Federal Government." 40 USC 3701 (b) (1) (B) (iii) and (b) (2), 29 CFR 5.2 (h), 49 CFR 18.36 (i) (6). Although the original Act required its application in any construction contract over $2,000 or non-construction contract to which the Act applied over $2,500 (and language to that effect is still found in 49 CFR 18.36(i) (6), the Act no longer applies to any "contract in an amount that is not greater than $100,000." 40 USC 3701 (B) (3) (A) (iii).

The Act applies to construction contracts and, in very limited circumstances, non-construction projects that employ "laborers or mechanics on a public work." These non-construction applications do not generally apply to transit procurements because transit procurements (to include rail cars and buses) are deemed "commercial items." 40 USC 3707, 41 USC 403 (12). A grantee that contemplates entering into a contract to procure a developmental or unique item should consult counsel to determine if the Act applies to that procurement and that additional language required by 29 CCFR 5.5(c) must be added to the basic clause below. The clause language is drawn directly from 29 CFR 5.5 (b) and any deviation from the model
Clause below should be coordinated with counsel to ensure the Act's requirements are satisfied.

(1) Overtime requirements – No contractor or subcontractor contracting for any part of the contract work which may require or involve the employment of laborers or mechanics shall require or permit any such laborer or mechanic in any workweek in which he or she is employed on such work to work in excess of forty (40) hours in such workweek unless such laborer or mechanic receives compensation at a rate not less than one and one-half times the basic rate of pay for all hours worked in excess of forty hours in such workweek.

(2) Violation; liability for unpaid wages; liquidated damages – In the event of any violation of the clause set forth in paragraph (1) of this section the contractor and any subcontractor responsible therefore shall be liable for the unpaid wages. In addition, such contractor and subcontractor shall be liable to the United States for liquidated damages. Such liquidated damages shall be computed with respect to each individual laborer or mechanic, including watchmen and guards, employed in violation of the clause set forth in paragraph (1) of this section in the sum of $10 for each calendar day on which such individual was required or permitted to work in excess of the standard workweek of forty (40) hours without payment of the overtime wages required by the clause set forth in paragraph (1) of this section.

(3) Withhold for unpaid wages and liquidated damages – The County shall upon its own action or upon written request of an authorized representative of the Department of Labor withhold or cause to be withheld, from any money payable on account of work performed by the contractor or subcontractor under such contract or any other Federal contract with the same prime contractor, or any other federally-assisted contract subject to the Contract Work Hours and Safety Standards Act, which is held by the same prime contractor, such sums as may be determined to be necessary to satisfy any liabilities of such contractor or subcontractor for unpaid wages and liquidated damages as provided in the clause set forth in paragraph (2) of this section.

(4) Subcontracts – The contractor or subcontractor shall insert in any subcontracts the clauses set forth in paragraphs (1) through (4) of this section and also a clause requiring the subcontractors to include these clauses in any lower tier subcontracts. The prime contractor shall be responsible for compliance by any subcontractor or lower tier subcontractor with the clauses set forth in paragraphs (1) through (4) of this section.

15. NO GOVERNMENT OBLIGATION TO THIRD PARTIES

Applicable to: *All contracts*

(1) Manatee County and Contractor acknowledge and agree that, notwithstanding any concurrence by the Federal Government in or approval of the solicitation or award of the underlying contract, absent the express written consent by the Federal Government, the Federal Government is not a party to this contract and shall not be subject to any obligations or liabilities to the County, Contractor, or any other party (whether or not a party to that contract) pertaining to any matter resulting from the underlying contract.

(2) The Contractor agrees to include the above clause in each subcontractor financed in whole or in part with Federal assistance provided by FTA. It is further agreed that the clause shall not be modified, except to identify the subcontractor who will be subject to its provisions.

16. PROGRAM FRAUD AND FALSE OR FRAUDULENT STATEMENTS AND RELATED ACTS

31 U.S.C. 3801 ET SEQ
49 CFR Part 31 18 U.S.C. 1001
49 U.S.C. 5307

Applicable to: *All contracts*

(1) The Contractor acknowledges that the provisions of the Program Fraud Civil Remedies Act of 1986, as amended, 31 U.S.C. § 3801 et seq. and U.S. DOT regulations, "Program Fraud Civil Remedies," 49 CFR Part 31, apply to its actions pertaining to this Project. Upon execution of the underlying contract, the Contractor certifies or affirms the truthfulness and accuracy of any statement it has made, it makes, it may make, or causes to be made, pertaining to the underlying contract or the FTA assisted project for which this contract work is being performed. In addition to other penalties that may be applicable, the Contractor further acknowledges that if it makes, or causes to be made, a false, fictitious, or fraudulent claim, statement, submission, or certification, the Federal Government reserves the right to impose the penalties of the Program Fraud Civil Remedies Act of 1986 on the Contractor to the extend the Federal Government deems appropriate.

(2) The Contractor also acknowledges that if it makes, or causes to be made, a false, fictitious, or fraudulent claim, statement, submission, or certification to the Federal Government under a contract connected with a project that is financed in whole or in part with Federal assistance originally awarded by FTA under the authority of 49 U.S.C. § 5307, the Government reserves the right to impose the penalties of 18 U.S.C. § 1001 and 49 U.S.C. § 5307 (n)(1) on the Contractor to the extend the Federal Government deems appropriate.

(3) The Contractor agrees to include the above two clauses in each subcontract financed in whole or in part with Federal assistance provided by FTA. It is further agreed that the clauses shall not be modified, except to identify the subcontractor who will be subject to the provisions.

17. TERMINATION

49 U.S.C. Part 18
FTA Circular 4220.1E

Applicable to: *All contracts in excess of $10,000*

a. Termination for Convenience (General Provision): Manatee County may terminate this contract, in whole or in part, at any time by written notice to the Contractor when it is in the Government's best interest. The Contractor shall be paid its costs, including contract close-out costs, and profit on work performed up to the time of termination. The Contractor shall promptly submit its termination claim to the County to be paid to the Contractor. If the Contractor has any property in its possession belonging to the County, the Contractor will account for the same, and dispose of it in the manner the County directs.

b. Termination for Default [Breach or Cause] (General Provision): If the Contractor does not deliver supplies in accordance with the contract delivery schedule, or, if the contract is for services, the Contractor fails to perform in the manner called for in the contract, or if the Contractor fails to comply with any other provisions of the contract, the County may terminate this contract for default. Termination shall be effected by serving a notice of termination on the contractor setting forth the manner in which the Contractor is in default. The Contractor will only be paid the contract price for supplies delivered and accepted, or services performed in accordance with the manner of performance set forth in the contract.

If it is later determined by the County that the Contractor had an excusable reason for not performing, such as a strike, fire, or flood, events which are not the fault of or are beyond the control of the Contractor, the County, after setting up a new delivery of performance schedule, may allow the Contractor to continue work, or treat the termination as a termination for convenience.

c. Opportunity to Cure (General Provisions): The County in its sole discretion may, in the case of termination for breach or default, allow the Contractor [an appropriately short period of time] in which to cure the defect. In such case, the notice of termination will state the time period in which cure is permitted and other appropriate conditions.

If Contractor fails to remedy to the County's satisfaction the breach or default of any of the terms, covenants, or conditions of this contract within [ten (10) days] after receipt by Contractor of written notice from the County setting forth the nature of said breach or default, the County shall have the right to terminate the contract without any further obligation to the Contractor. Any such termination for default shall not in any way operate to preclude the County from also pursuing all available remedies against the Contractor and its Sureties for said breach or default.

d. Waiver of Remedies for any Breach: In the event that the County elects to waive its remedies for any breach by Contractor of any covenant, term or condition of this contract, such waiver by the County shall not limit the County's remedies for any succeeding breach of that or any other term, covenant, or condition of this contract.

e. Termination for Convenience (Professional or Transit Service Contracts): The County, by written notice, may terminate this contract, in whole or in part, when it is in the Government's interest. If this contract is terminated, the County shall be liable only for payment under the payment provisions of this contract for services rendered before the effective date of termination.

f. Termination for Default (Supplies and Service): If the Contractor fails to deliver supplies or to perform the services within the time specified in this contract or any extension or if the Contractor fails to comply with any other provisions of this contract, the County may terminate this contract for default. The County shall terminate by delivering to the Contractor a Notice of Termination specifying the nature of the default. The Contractor will only be paid the contract price for supplies delivered and accepted, or services performed in accordance with the manner or performance set forth in this contract.

If, after termination for failure to fulfill contract obligations, it is determined that the Contractor was not in default, the rights and obligations of the parties shall be the same as if the termination had been issued for the convenience of the Recipient.

g. Termination for Default (Transportation Services): If the Contractor fails to pick up the commodities or to perform the services, including delivery services, within the time specified in this contract or any extension or if the Contractor fails to comply with any other provisions of this contract, the County may terminate this contract for default. The County shall terminate by delivering to the Contractor a Notice of Termination specifying the nature of default. The Contractor will only be paid the contract price for services performed in accordance with the manner of performance as set forth in this contract.

If this contract is terminated while the Contractor has possession of the County's goods, the Contractor shall, upon direction of the County, protect and preserve the goods until surrendered to the County or its agent. The Contractor and the County shall agree on payment for the preservation and protection of goods. Failure to agree on an amount will be resolved under the Dispute clause.

If, after termination for failure to fulfill contract obligation, it is determined that the Contractor was not in default, the rights and obligations of the parties shall be the same as if the termination had been issued for the convenience of the County.

h. Termination for Default (Construction): If the Contractor refuses or fails to prosecute the work or any separable part, with the diligence that will insure its completion within the time specified in this contract or any extension or fails to complete the work within this time, or if the Contractor fails to comply with any other provisions of this contract, the County may terminate this contract for default. The County shall terminate by delivering to the Contractor a Notice of Termination specifying the nature of the default. In this event, the County may take over the work and complete it by contract or otherwise, and may take possession of and use any materials, appliances, and plant on the work site necessary for the completing the work. The Contractor and its Sureties shall be liable for any damage to the County resulting from the Contractor's refusal or failure to complete the work within specified time, whether or not the Contractor's right to proceed with the work is terminated. This liability includes any increased costs incurred by the County in completing the work.

The Contractor's right to proceed shall not be terminated nor the Contractor charged with damages under this clause if:

1. the delay in completing the work arises from unforeseeable causes beyond the control and without the fault or negligence of the Contractor. Examples of such causes include: acts of God, acts of the County, acts of another Contractor in the performance of a contract with the County, epidemics, quarantine restrictions, strikes, freight embargoes; and

2. the contractor, with ten (10) days from the beginning of any delay, notifies the County in writing of the causes of delay. If in the judgment of the County, the delay is excusable, the time for completing the work shall be extended. The judgment of the County shall be final and conclusive on the parties, but subject to appeal under the Dispute clauses.

If, after termination of the Contractor's right to proceed, it is determined that the Contractor was not in default, or that the delay was excusable, the rights and obligations of the parties will be the same as if the termination had been issued for the convenience of the County.

i. Termination for Convenience or Default (Architect and Engineering): The **County** may terminate this contract in whole or in part, for the **County's** convenience or because of the failure of the Contractor to fulfill the contract obligations. The **County** shall terminate by delivering to the Contractor a Notice of Termination specifying the nature, extent, and effective date of the termination. Upon receipt of the notice, the Contractor shall (1) immediately discontinue all services affected (unless the notice directs otherwise), and (2) deliver to the Contracting Officer all data, drawings, specifications, reports, estimates, summaries, and other information and materials accumulated in performing this contract, whether completed or in process.

If the termination is for the convenience of the **County**, the Contracting Officer shall make an equitable adjustment in the contract price but shall allow no anticipated profit on unperformed services.

If the termination is for failure of the Contractor to fulfill the contract obligations, the County may complete the work by contract or otherwise and the Contractor shall be liable for any additional cost incurred by the **County**.

If, after termination for failure to fulfill contract obligations, it is determined that the Contractor was not in default, the rights and obligations of the parties shall be the same as if the termination had been issued for the convenience of the County.

j. Termination for Convenience of Default (Cost-Type Contracts): The **County** may terminate this contract, or any portion of it, by serving a notice or termination on the Contractor. The notice shall state whether the termination is for convenience of the **County** or for the default of the Contractor. If the termination is for default, the notice shall state the manner in which the contractor has failed to perform the requirements of the contract. The Contractor shall account for any property in its possession paid for from funds received from the **County**, or property supplied to the Contractor by the **County**. If the termination is for default, the County may fix the fee, if the contract provides for fees, to be paid the Contractor in proportion to the value, if any, of work performed up to the time of termination.

The Contractor shall promptly submit its termination claim to the **County** and the parties shall negotiate the termination settlement to be paid the Contractor.

If the termination is for convenience of the **County**, the Contractor shall be paid its contract close-out costs, and a fee, if the contract provided for payment of a fee, in proportion to the work performed up to the time of termination.

If, after serving a notice of termination for default, the **County** determines that the Contractor has an excusable reason for not performing, such as strike, fire, flood, events which are not the fault of and are beyond the control of the Contractor, the **County**, after setting up a new work schedule, may allow the Contractor to continue work, or treat the termination as a termination for convenience.

18. GOVERNMENT-WIDE DEBARMENT AND SUSPENSION (NONPROCUREMENT)

49 CRF Part 29
Executive Order 12459

Applicable to: *All contracts and subcontracts which exceed $25,000*

This contract is a covered transaction for purposes of 49 CFR Part 29. As such, the Contractor is required to verify that none of the Contractor, its principals, as defined at 49 CFR 29.995, or affiliates, as defined at 49 CFR 29.905, are excluded or disqualified as defined at 49 CFR 29.940 and 29.945.

The Contractor is required to comply with 49 CFR 29, Subpart C and must include the requirement to comply with 49 CFR, Subpart C in any lower tier covered transaction it enters into. By signing and submitting its bid or proposal, the bidder or proposer certifies as follows:

The certification in this clause is a material representation of fact relied upon by the County. If it is later determined that the bidder or proposer knowingly rendered an erroneous certification, in addition to remedies available to the County, the Federal Government may pursue available remedies, including but not limited to suspension and /or debarment. The bidder or proposer agrees to comply with the requirements of 49 CFR 29, Subpart C while this offer is valid and throughout the period of any contract that may arise from this offer. The bidder or proposer further agrees to include a provision requiring such compliance in its lower tier covered transactions.

SIGNATURE: _____

COMPANY NAME: _____

DATE: _____

19. PRIVACY ACT

5 U.S.C. 552

Applicable to: *All contracts*

Contracts Involving Federal Privacy Act Requirements: The following requirements apply to the Contractor and its employees that administer any system of records on behalf of the Federal Government under any contract:

(1) The Contractor agrees to comply with, and assures the compliance of its employees with, the information restrictions and other applicable requirements of the Privacy Act of 1974, 5U.S.C. § 552a. Among other things, the Contractor agrees to obtain the express consent of the Federal Government before the Contractor or its employees operate a system of records on behalf of the Federal Government. The Contractor understands that the requirements of the Privacy Act, including the civil and criminal penalties for violation of that Act, apply to those individuals involved, and that failure to comply with the terms of the Privacy Act may result in termination of the underlying contract.

(2) The Contractor also agrees to include these requirements in each subcontract or administer any system of records on behalf of the Federal Government financed in whole or in part with Federal assistance provided by FTA.

20. CIVIL RIGHTS REQUIREMENTS

29 U.S.C. § 623, 42 U.S.C. § 2000
42 U.S.C. § 6102, 42 U.S.C. § 12112
42U.S.C. § 12132, 49 U.S.C. § 5332
29 CFR Part 1630, 41 CFR Parts 60 et seq.

Applicable to: *All contracts*

(1) Nondiscrimination: In accordance with Title VI of the Civil Rights Act, as amended, 42 U.S.C. § 2000d, section 303 of the Age Discrimination Act of 1975, as amended, 42 U.S.C. § 6102, section 202 of the Americans with Disabilities Act of 1990, 42 U.S.C. § 12132, and Federal transit law at 49 U.S.C. § 5332, the Contractor agrees that it will not discriminate against any employee or applicant for employment because of race, color, creed, national origin, sec, age, or disability. In addition, the Contractor agrees to comply with applicable Federal implementing regulations and other implanting requirements FTA may issue.

(2) Equal Employment Opportunity: The following equal employment opportunity requirements apply to the underlying contract:

(2) Equal Employment Opportunity:

(a) Race, Color, Creed, National Origin, Sex: In accordance with Title VII of the Civil Rights Act, as amended, 42 U.S.C. § 2000e, and Federal transit laws at 49 U.S.C. § 5332, t he Contractor agrees to comply with all applicable equal employment opportunity requirements of U.S. Department of Labor (U.S. DOL) regulations "Office of Federal Contract Compliance Programs, Equal Employment Opportunity, Department of Labor," 41 C.F. R. Part 60 et seq., (which implement Executive Order No. 11246, "Equal Employment Opportunity," as amended by Executive Order No. 11375, "Amending Executive Order 11246 Relating to Equal Employment Opportunity," 42 U.S.C. § 2000e note), and with any applicable Federal statutes, executive orders, regulations, and Federal policies that may in the future affect construction activities undertaken in the course of the Project. The Contractor agrees to take affirmative action to ensure that applicants are employed, and that employees are treated during employment, without regard to their race, color, creed, national origin, sex, or age. Such action shall include, but not be limited to, the following: employment, upgrading, demotion or transfer, recruitment or recruitment advertising, layoff or termination; rates of pay or other forms of compensation; and selection for training, including apprenticeship. In addition, the Contractor agrees to comply with any implementing requirements FTA may issue.

(b) Age: In accordance with section 4 of the Age Discrimination in Employment Act of 1967, as amended, 29 U.S.C. § § 623 and Federal Transit law at 49 U.S.C § 5332, the Contractor agrees to refrain from discrimination against present and prospective employees for reason of age. In addition, the Contractor agrees to comply with any implementing requirements FTA may issue.

(c) Disabilities: In accordance with section 102 of the Americans with Disabilities Act, as amended, 42 U.S.C. § 12112, the Contractor agrees that it will comply with the requirements of U.S. Equal Employment Opportunity Commission, "Regulations to Implement the Equal Employment Provisions of the Americans with Disabilities Act," 29 C.F.R. Part 1630, pertaining to employment of persons with disabilities. In addition, the Contractor agrees to comply with any implementing requirements FTA may issue.

(3) The Contractor also agrees to include these requirements in each subcontract financed in whole or in part with Federal assistance provided by FTA, modified only if necessary to identify the affected parties.

21. BREACHES AND DISPUTE RESOLTUION

49 CFR Part 18
FTA Circular 4220.1E

Applicable to: *All contracts in excess of $100,000*

Breaches and Dispute Resolution are in accordance with Manatee County Code of Law, Chapter 2-26, Manatee County Purchasing Ordinance.

22. DISADVANTAGED BUSINESS ENTERPRISE (DBE)
49 CFR Part 26

Applicable to: *All contracts*

(a) This contract is subject to the requirements of Title 49, Code of Federal Regulations, Part 26, Participation by Disadvantaged Business Enterprises in Department of Transportation Financial Assistance Programs. The national goal for participation of Disadvantaged Business Enterprises is 10%. Manatee County's overall goal for DEB participation is .7% for Fiscal Years 2017 through 2019.

If a specific DBE goal is assigned to this contract, it will be clearly stated in the bid documents.

(b) The Contractor shall not discriminate on the basis of race, color, national origin, or sex in the performance of this contract. The Contractor shall carry out applicable requirements of 49 CFR Part 26 in the award and administration of this DOT assisted contract. Failure by the Contractor to carry out these requirements is a material breach of this contract, which may result in the termination of this contract or other such remedy as the County may deem appropriate. Each subcontract the Contractor signs with a subcontractor must include the assurance in this paragraph (see 49 CFR 26.13 (b)).

(c) ***If a separate contract goal has been established,*** the Bidders / Offerors are required to document sufficient DBE participation to meet these goals or, alternatively, document adequate good faith efforts to do so, as provided for in 49 CFR 26.53. Award of this contract is conditioned on submission of the following **[concurrent with and accompanying sealed bid] [concurrent with and accompanying an initial proposal] [prior to award]:**

1. The names and addresses of DBE firms that will participate in the contract;

2. A description of the work each DBE will perform;

3. The dollar amount of the participation of each DBE firm participating;

4. Written documentation of the bidder/offeror's commitment to use a DBE subcontractor whose participation it submits to meet the contract goal;

5. Written confirmation from the DBE that it is participating in the contract as provided in the prime contractor's commitment; and

6. If the contract goal is not met, evident of good faith efforts to do so.

[Bidders] [Offerors] must present the information above **[as a matter of responsiveness] with initial proposals [prior to contract award]** (see 49 CFR 26.53 (3)).

If NO separate contract goal has been established, the successful bidder/offeror will be required to report its DBE participation obtained through race-neutral means throughout the period of performance.

(d) The contractor is required to pay its subcontractors performing work related to this contract for satisfactory performance of that work no later than 30 days after the contractor's receipt of payment for that work from **Manatee County**. In addition, **[the contractor may not hold retainage from its subcontractors.] [is required to return any retainage payments to**

those subcontractors within 30 days after the subcontractor's work related to this contract is satisfactorily completed.] [is required to return any retainage payments to those subcontractors within 30 days after incremental acceptance of the subcontractor's work by {Manatee County} and contractor's receipt of the partial retainage payment related to the subcontractor's work].

(c) The contractor must promptly notify **Manatee County,** whenever a DBE subcontractor performing work related to this contract is terminated or fails to complete its work, and must make good faith efforts to engage another DBE subcontractor to perform at least the same amount of work. The contractor may not terminate any DBE subcontractor and perform that work through its own forces or those of an affiliate without prior written consent of **Manatee County.**

(d) The Contractor agrees to pay each subcontractor under this prime contract for satisfactory performance of its contractor no later than 10 days from the receipt of each payment the Contractor receives from the County. The Contractor agrees further to return retainage payments (if any) to each subcontractor within 30 calendar days after the subcontractor(s)' work is satisfactory completed. Any delay or postponement of payment from the above referenced time frame may occur only for good cause following written approval by the County. This clause applies to both DBE and non-DBE subcontractors. The Contractor and its subcontractors shall further comply with Section 218.735 of the Florida Prompt Payment Statute to the extent applicable.

(e) The Contractor must promptly notify the County whenever a DBE subcontractor performing work related to this contract is terminated or fails to complete its work, and must make good faith efforts engage another DBE subcontractor to perform at least the same amount of work. The Contractor may not terminate any DBE subcontractor and perform that work through its own forces or those of an affiliate without prior written consent of the County.

23. INCORPORATION OF FEDERAL TRANSIT ADMINISTRATION (FTA TERMS)

FTA Circular 4220.1E

Applicable to: *All contracts*

Incorporation of Federal Transit Administration (FTA) Terms: The preceding provisions include, in part, certain Standard Terms and Conditions required by DOT, whether or not expressly set forth in the preceding contract provisions. All contractual provisions required by DOT, as set forth in FTA Circular 4220.1E, are herby incorporated by reference. Anything to the contrary herein notwithstanding, all FTA mandated terms shall be deemed to control in the event of conflict or other provisions contained in this Agreement. The Contractor shall not perform any act, fail to perform any act, or refuse to comply with any County requests which would cause **Manatee County** to be in violation of the FTA terms and conditions.

Section G

General Decision Number: FL170257 03/10/2017 FL257

Superseded General Decision Number: FL20160257

State: Florida

Construction Type: Building

County: Manatee County in Florida.

BUILDING CONSTRUCTION PROJECTS (does not include single family homes or apartments up to and including 4 stories).

Note: Under Executive Order (EO) 13658, an hourly minimum wage of $10.20 for calendar year 2017 applies to all contracts subject to the Davis-Bacon Act for which the contract is awarded (and any solicitation was issued) on or after January 1, 2015. If this contract is covered by the EO, the contractor must pay all workers in any classification listed on this wage determination at least $10.20 (or the applicable wage rate listed on this wage determination, if it is higher) for all hours spent performing on the contract in calendar year 2017. The EO minimum wage rate will be adjusted annually. Additional information on contractor requirements and worker protections under the EO is available at www.dol.gov/whd/govcontracts.

Modification Number	Publication Date
0	01/06/2017
1	02/03/2017
2	02/10/2017
3	03/10/2017

ASBE0067-003 01/01/2017

	Rates	Fringes
ASBESTOS WORKER/HEAT & FROST INSULATOR	$ 27.40	14.29

---

* ELEC0915-005 12/05/2016

	Rates	Fringes
ELECTRICIAN (Includes Low Voltage Wiring) Building Electrical Contracts over $200,000. Excludes all Educational, Theme Park, and Hospital Facilities	$ 25.09	37%+.2

ELEV0074-001 01/01/2017

	Rates	Fringes
ELEVATOR MECHANIC	$ 38.70	31.585

FOOTNOTE:
A. Employer contributions 8% of regular hourly rate to

vacation pay credit for employee who has worked in business more than 5 years; Employer contributions 6% of regular hourly rate to vacation pay credit for employee who has worked in business less than 5 years.

Paid Holidays: New Year's Day; Memorial Day; Independence Day; Labor Day; Thanksgiving Day; The Friday after Thanksgiving Day; and Christmas Day.

ENGI0487-021 07/01/2016

	Rates	Fringes
OPERATOR: Crane		
All Cranes 160 Ton Capacity and Over	$ 33.05	9.20
All Cranes Over 15 Ton Capacity	$ 32.05	9.20
OPERATOR: Forklift	$ 23.25	9.20
OPERATOR: Mechanic	$ 32.05	9.20
OPERATOR: Oiler	$ 23.50	9.20

IRON0397-007 07/01/2014

	Rates	Fringes
IRONWORKER, STRUCTURAL	$ 25.99	13.59

IRON0402-001 10/01/2015

	Rates	Fringes
IRONWORKER, ORNAMENTAL	$ 22.34	10.15

---

* SFFL0821-004 01/01/2017

	Rates	Fringes
SPRINKLER FITTER (Fire Sprinklers)	$ 26.98	18.17

SUFL2014-021 08/16/2016

	Rates	Fringes
CARPENTER	$ 19.78	8.05
CEMENT MASON/CONCRETE FINISHER	$ 14.85	0.60
IRONWORKER, REINFORCING	$ 26.37	12.65
LABORER: Common or General, Including Cement Mason Tending	$ 13.11	0.60
LABORER: Pipelayer	$ 14.00	1.40
OPERATOR: Backhoe/Excavator/Trackhoe	$ 22.07	8.80

OPERATOR: Bulldozer	$ 15.40	1.90
OPERATOR: Grader/Blade	$ 18.97	0.00
OPERATOR: Loader	$ 14.00	1.40
OPERATOR: Roller	$ 14.43	4.78
PAINTER: Brush, Roller and Spray	$ 14.72	2.13
PIPEFITTER, Includes HVAC Pipe Installation	$ 21.93	7.96
PLUMBER	$ 21.14	8.11
ROOFER	$ 19.00	1.17
SHEET METAL WORKER, Includes HVAC Duct Installation	$ 18.82	6.78
TILE SETTER	$ 18.01	0.00
TRUCK DRIVER: Dump Truck	$ 13.22	2.12
TRUCK DRIVER: Lowboy Truck	$ 14.24	0.00

WELDERS - Receive rate prescribed for craft performing operation to which welding is incidental.

==========

Note: Executive Order (EO) 13706, Establishing Paid Sick Leave for Federal Contractors applies to all contracts subject to the Davis-Bacon Act for which the contract is awarded (and any solicitation was issued) on or after January 1, 2017. If this contract is covered by the EO, the contractor must provide employees with 1 hour of paid sick leave for every 30 hours they work, up to 56 hours of paid sick leave each year. Employees must be permitted to use paid sick leave for their own illness, injury or other health-related needs, including preventive care; to assist a family member (or person who is like family to the employee) who is ill, injured, or has other health-related needs, including preventive care; or for reasons resulting from, or to assist a family member (or person who is like family to the employee) who is a victim of, domestic violence, sexual assault, or stalking. Additional information on contractor requirements and worker protections under the EO is available at www.dol.gov/whd/govcontracts.

Unlisted classifications needed for work not included within the scope of the classifications listed may be added after award only as provided in the labor standards contract clauses (29CFR 5.5 (a) (1) (ii)).

The body of each wage determination lists the classification and wage rates that have been found to be prevailing for the cited type(s) of construction in the area covered by the wage determination. The classifications are listed in alphabetical order of "identifiers" that indicate whether the particular rate is a union rate (current union negotiated rate for local), a survey rate (weighted average rate) or a union average rate (weighted union average rate).

Union Rate Identifiers

A four letter classification abbreviation identifier enclosed in dotted lines beginning with characters other than "SU" or "UAVG" denotes that the union classification and rate were prevailing for that classification in the survey. Example: PLUM0198-005 07/01/2014. PLUM is an abbreviation identifier of the union which prevailed in the survey for this classification, which in this example would be Plumbers. 0198 indicates the local union number or district council number where applicable, i.e., Plumbers Local 0198. The next number, 005 in the example, is an internal number used in processing the wage determination. 07/01/2014 is the effective date of the most current negotiated rate, which in this example is July 1, 2014.

Union prevailing wage rates are updated to reflect all rate changes in the collective bargaining agreement (CBA) governing this classification and rate.

Survey Rate Identifiers

Classifications listed under the "SU" identifier indicate that no one rate prevailed for this classification in the survey and the published rate is derived by computing a weighted average rate based on all the rates reported in the survey for that classification. As this weighted average rate includes all rates reported in the survey, it may include both union and non-union rates. Example: SULA2012-007 5/13/2014. SU indicates the rates are survey rates based on a weighted average calculation of rates and are not majority rates. LA indicates the State of Louisiana. 2012 is the year of survey on which these classifications and rates are based. The next number, 007 in the example, is an internal number used in producing the wage determination. 5/13/2014 indicates the survey completion date for the classifications and rates under that identifier.

Survey wage rates are not updated and remain in effect until a new survey is conducted.

Union Average Rate Identifiers

Classification(s) listed under the UAVG identifier indicate that no single majority rate prevailed for those classifications; however, 100% of the data reported for the classifications was union data. EXAMPLE: UAVG-OH-0010 08/29/2014. UAVG indicates that the rate is a weighted union average rate. OH indicates the state. The next number, 0010 in the example, is an internal number used in producing the wage determination. 08/29/2014 indicates the survey completion date for the classifications and rates under that identifier.

A UAVG rate will be updated once a year, usually in January of each year, to reflect a weighted average of the current negotiated/CBA rate of the union locals from which the rate is based.

WAGE DETERMINATION APPEALS PROCESS

1.) Has there been an initial decision in the matter? This can be:

* an existing published wage determination
* a survey underlying a wage determination
* a Wage and Hour Division letter setting forth a position on a wage determination matter
* a conformance (additional classification and rate) ruling

On survey related matters, initial contact, including requests for summaries of surveys, should be with the Wage and Hour Regional Office for the area in which the survey was conducted because those Regional Offices have responsibility for the Davis-Bacon survey program. If the response from this initial contact is not satisfactory, then the process described in 2.) and 3.) should be followed.

With regard to any other matter not yet ripe for the formal process described here, initial contact should be with the Branch of Construction Wage Determinations. Write to:

Branch of Construction Wage Determinations
Wage and Hour Division
U.S. Department of Labor
200 Constitution Avenue, N.W.
Washington, DC 20210

2.) If the answer to the question in 1.) is yes, then an interested party (those affected by the action) can request review and reconsideration from the Wage and Hour Administrator (See 29 CFR Part 1.8 and 29 CFR Part 7). Write to:

Wage and Hour Administrator
U.S. Department of Labor
200 Constitution Avenue, N.W.
Washington, DC 20210

The request should be accompanied by a full statement of the interested party's position and by any information (wage payment data, project description, area practice material, etc.) that the requestor considers relevant to the issue.

3.) If the decision of the Administrator is not favorable, an interested party may appeal directly to the Administrative Review Board (formerly the Wage Appeals Board). Write to:

Administrative Review Board
U.S. Department of Labor

200 Constitution Avenue, N.W.
Washington, DC 20210

4.) All decisions by the Administrative Review Board are final.

==========

END OF GENERAL DECISION

BID FORM
(SUBMIT IN DUPLICATE)

For: IFB17-0817OV,
MCAT 2017 Construction of ADA Compliant Bus Stop Landing Pads, Walkways, Sidewalks, Shelter Pads and Bench Pads Project
Manatee County, FL

Total Offer: $_____

We, the undersigned, hereby declare that we have carefully reviewed the IFB Documents in their entirety and with full knowledge and understanding of the aforementioned herewith submit this bid, completely meeting each and every specification, term, and condition contained therein.

As bidder, we understand that the IFB documents, in its entirety, including but not limited to, all specifications, terms, and conditions shall be made a part of any resulting Agreement between Manatee County and the successful bidder. Failure to comply shall result in Agreement default, whereupon, the defaulting successful bidder shall be required to pay for any and all re-procurement costs, damages, and attorney fees as incurred by County, and agrees to forfeit his/her bid bond, (if applicable).

Communications concerning this bid shall be addressed as follows: **(Complete all fields)**

Bidder's Name: _____

Mailing Address: _____
Telephone: ( ) _____ Fax: ( ) _____

Email Address: _____

Acknowledge Addendum No.____ Dated: _____ Acknowledge Addendum No.____ Dated: _____
Acknowledge Addendum No.____ Dated: _____ Acknowledge Addendum No.____ Dated: _____
Acknowledge Addendum No.____ Dated: _____ Acknowledge Addendum No.____ Dated: _____

Authorized Signature(s): _____

Name and Title of Above Signer(s): _____

Date: _____

BID FORM FOR IFB 17-0817OV

MCAT 2017 CONSTRUCTION OF AMERICANS WITH DISABILITIES ACT (ADA) COMPLIANT BUS STOP

LANDING PADS, WALKWAYS, SIDEWALKS, SHELTER PADS AND BENCH PADS PROJECT

(Submit in Duplicate)

Quantities listed are Estimated Quantities and are provided to you as a guideline for preparing your bid and should not be construed as representing actual quantitites to be purchased.

ITEM NO.	FDOT ITEM NO.\ M/C PLANS		DESCRIPTION	QTY	U/M	BID PRICE	EXTENDED PRICE
			Construction of Americans with Disabilities Act (ADA) Compliant Concrete Boarding and Alighting Passenger Landing Pads in accordance with the latest Manatee County Utility Design Standards, Transportation Design Standards and Stormwater Design Standards, dated June 2015. All Construction and Standards Referenced within shall meet or exceed F.D.O.T. Roadway and Traffic DesignStandards (Latest Edition) and F.D.O.T. Standard Specifications for Road and Bridge Construction (Latest Edition), unless otherwise noted. Plans for Boarding Pad Typicals, Shelter Slab Typicals, Bench Pad Typicals are attached detailing Condition 1 through 10, as required.				
1	102-1		Mobilization Day Time	40	DAY	$	$
2	102-1		Mobilization Night Time	9	DAY	$	$
3	102-1		MOT 1 Lane Closure W/Crew - Day Time	108	DAY	$	$
4	102-1		MOT 1 Lane Closure W/Crew - Night Time	25	DAY	$	$
5	102-1		Flaggers (2)	25	DAY	$	$
6	120-1		Cut	1,000	CY	$	$
7	120-6		Fill	1,000	CY	$	$
8	430-174		Pipe Storm Sewer Concrete (RCP 15" or 18")	32	LF	$	$

BIDDER:_____

AUTHORIZED SIGNATURE:_____

BID FORM FOR IFB 17-0817OV

MCAT 2017 CONSTRUCTION OF AMERICANS WITH DISABILITIES ACT (ADA) COMPLIANT BUS STOP

LANDING PADS, WALKWAYS, SIDEWALKS, SHELTER PADS AND BENCH PADS PROJECT

(Submit in Duplicate)

Quantities listed are Estimated Quantities and are provided to you as a guideline for preparing your bid and should not be construed as representing actual quantitites to be purchased.

ITEM NO.	FDOT ITEM NO.\ M/C PLANS		DESCRIPTION	QTY	U/M	BID PRICE	EXTENDED PRICE
9	430-174		Pipe Storm Sewer Concrete (RCP 24" or 30")	32	LF	$	$
10	430-98		Miter End Section (MES 15" or 18")	2	EA	$	$
11	430-98		Miter End Section (MES 24" or 30")	2	EA	$	$
12	430-99		Miter End Section (MES 30" Bars)	2	EA	$	$
13	520-2		Curb Type D	702	LF	$	$
14	520-1		Curb Type E	1,000	LF	$	$
15	520-1		Curb Type F	1,000	LF	$	$
16	522-2		6" Reinforced Concrete	58,346	SF	$	$
17	527-2		ADA Truncated Dome (Detecable Warning	500	SF	$	$
18	515-2		Railing	61	LF	$	$
19	570-1		Bahia Sod	1,427	SY	$	$

BIDDER:_____

AUTHORIZED SIGNATURE:_____

BID FORM FOR IFB 17-0817OV

MCAT 2017 CONSTRUCTION OF AMERICANS WITH DISABILITIES ACT (ADA) COMPLIANT BUS STOP LANDING PADS, WALKWAYS, SIDEWALKS, SHELTER PADS AND BENCH PADS PROJECT

(Submit in Duplicate)

Quantities listed are Estimated Quantities and are provided to you as a guideline for preparing your bid and should not be construed as representing actual quantitites to be purchased.

ITEM NO.	FDOT ITEM NO.\ M/C PLANS		DESCRIPTION	QTY	U/M	BID PRICE	EXTENDED PRICE
20	MCAT Condition 1 thru 10		Installation of ADA Boarding Pads W/Bench Slabs	40	EA	$	$
21	MCAT Condition 1 thru 10		Installation of ADA Boarding Pads W/Shelter Slabs	20	EA	$	$
22	MCAT Condition 1 thru 10		Installation of ADA Boarding Pads	30	EA	$	$
23	MCAT Condition 1 thru 10		Installation of Trash Receptacle W/ Shelter Pads and / or Bench Pads	30	EA	$	$
			TOTAL OFFER (Items 1 through 23)				$
				UNIT OF MEASURE	**UNIT PRICE**	**MULTIPLIER**	
			OVERTIME SURCHARGE SHALL BE AT THE RATE OF:	**HOURS**	**$**	**x 40 HOURS =**	$

BIDDER:_____

AUTHORIZED SIGNATURE:_____

Bid Form / Subcontractor Percentage Form
(Submit in Duplicate)
IFB 17-0817OV

MCAT 2017 CONSTRUCTION OF AMERICANS WITH DISABILITIES ACT (ADA) COMPLIANT BUS STOP, LANDING PADS, WALKWAYS, SIDEWALKS, SHELTER PADS AND BENCH PADS PROJECT

ITEM NO.	FDOT ITEM NO. / MC PLANS	DESCRIPTION	%	DBE	DESCRIPTION OF WORK BY SUBCONTRACTOR	NAME AND CONTACT INFORMATION OF SUBCONTRACTOR
		Construction of ADA Compliant Bus Stop Pads - This is a duplication of the Bid Items where the Bidder shall state the percentage of work (of each item listed) and a description of the work which shall be performed by a subcontractor.				
1	102-1	Day Time Mobilizaton				
2	102-1	Night Time Mobilization				
3	102-1	MOT 1 Lane Closure W/Crew - Day Time				
4	102-1	MOT 1 Lane Closure W/Crew - Night Time				
5	102-1	Flaggers (2)				
6	120-1	Cut				
7	120-6	Fill				
8	430-174	Pipe Storm Sewer Concrete (RCP 15" or 18")				
9	430-174	Pipe Storm Sewer Concrete (RCP 24" or 30")				
10	430-98	Miter End Section (MES 15" or 18"				
11	430-98	Miter End Section (MES 24" or 30")				

BIDDER:_____

AUTHORIZED SIGNATURE:_____

Bid Form / Subcontractor Percentage Form
(Submit in Duplicate)
IFB 17-0817OV

MCAT 2017 CONSTRUCTION OF AMERICANS WITH DISABILITIES ACT (ADA) COMPLIANT BUS STOP, LANDING PADS, WALKWAYS, SIDEWALKS, SHELTER PADS AND BENCH PADS PROJECT

ITEM NO.	FDOT ITEM NO. / MC PLANS	DESCRIPTION	%	DBE	DESCRIPTION OF WORK BY SUBCONTRACTOR	NAME AND CONTACT INFORMATION OF SUBCONTRACTOR
12	430-99	Miter End Section (MES 30" Bars)				
13	520-2	Curb Type D				
14	520-1	Curb Type E				
15	520-1	Curb Type F				
16	522-2	6" Reinforced Concrete				
17	527-2	ADA Truncated Dome (Detecable Warning)				
18	515-2	Railing				
19	570-1	Bahia Sod				
20	MCAT Condition 1 thru 10	Installation of ADA Boarding Pads W/Bench Slabs				
21	MCAT Conditon 1 thru 10	Installation of ADA Boarding Pads w/ Shelter Slabs				
22	MCAT Condition 1 thru 10	Installation of ADA Boarding Pads				
23	MCAT Condition 1 thru 10	Installation of Trash Receptacle W/Shelter and / or Bench Pads				

BIDDER:_____

AUTHORIZED SIGNATURE:_____

PART OF BID FORM IFB 17-0817OV

MCAT 2017 Construction of ADA Compliant Bus Stop Landing Pads, Walkways, Sidewalks, Shelter Pads and Bench Pads Project

MINORITY BUSINESS ENTERPRISE / WOMAN OWNED BUSINESS ENTERPRISE (MBE/WBE) CERTIFICATION

Utilization of Minority and Women Owned Businesses (MBE/WBE)

If the bidder intends to subcontract any portion of the work, the bidder must take all necessary affirmative steps to assure that minority businesses, women owned business enterprises, and labor surplus area firms are used when possible. Bidders shall document their efforts to utilize MBE/WBE firms to include information demonstrating the specific firms which were solicited as suppliers and/or subcontractors as applicable and submit this information with their bid.

For additional information, Bidder may seek information about certification or MBE/WBE firms from the following sources:

- Florida Department of Management Services (Office of Supplier Diversity)
- Florida Department of Transportation
- Minority Business Development Centers in most large cities and
- Local government MBE/DBE programs in many large counties and cities

Completing the information requested below, bidders shall submit documentation of good faith efforts to assure minority businesses, woman owned business enterprises and labor surplus firms are used when possible.

If the bidder intends to utilize MBE/WBE subcontractors for any portion of the work on this project, complete the information below by following these instructions: On the first line, indicate the name of the MBE/WBE firm and person at that firm who you contacted. On the second line indicate the date the firm was contacted and specify the work or expertise rendered by the MBE/WBE firm. Finally, check only one box indicating whether or not the MBE/WBE firm is interested in providing services on this project. If the box "not interested" is checked, provide a brief summary of the MBE/WBE's response. Submit this form with your bid.

If subcontractors will not be used on this project, check the box directly above the signature block and submit the form with your bid.

Firm / Person Contacted: _____

Date Contacted: _____ Area of Expertise: _____

☐ Interested ☐ *Not* Interested Response: _____

Firm / Person Contacted: _____

Date Contacted: _____ Area of Expertise: _____

☐ Interested ☐ *Not* Interested Response:
_____Firm / Person Contacted:
_____

Date Contacted: _____ Area of Expertise: _____

☐ Interested ☐ *Not* Interested Response: _____

Firm / Person Contacted: _____

Date Contacted: _____ Area of Expertise: _____

☐ Interested ☐ *Not* Interested Response: _____

Firm / Person Contacted: _____

Date Contacted: _____ Area of Expertise: _____

☐ Interested ☐ *Not* Interested Response: _____

☐ Subcontractors will not be used on this project.

The undersigned certifies the above to be true and correct to the best of their knowledge and has been given the authority to act on behalf of the bidder.

Authorized Signature(s): _____

Print Name and Title of Above Signer(s): _____

Date: _____

MAILING LABEL

Cut along the outside border and affix this label to your sealed bid envelope to identify it as a "Sealed Bid". Be sure to include the name of the company submitting the bid and the bid due date and time where requested.

MAILING LABEL TO AFFIX TO OUTSIDE OF SEALED BID PACKAGE:

BIDDER: _____

INVITATION FOR BID No.: IFB17-0817OV

BID TITLE: , MCAT Construction of American With Disabilities ACT (ADA) Compliant Bus Stop Landing Pads, Walkways, Sidewalks, Shelter Pads and Bench Pad Project

Bid Location: Manatee County Administration Building, Procurement Division, Suite 803, Bradenton, FL 34205

DUE DATE/TIME:

ATTACHMENT A
IFB17-0817OV

BIDDER'S QUESTIONNAIRE

(Submit in Duplicate)

The bidder warrants the truth and accuracy of all statements and answers herein contained. (Attach additional pages if necessary.)

THIS QUESTIONNAIRE MUST BE COMPLETED AND SUBMITTED WITH YOUR BID

1. Contact Information:

   FEIN #: _____

   License #: _____
   License Issued to: _____
   Date License Issued (MM/DD/YR): _____
   Company Name: _____
   Physical Address: _____
   City: _____ State of Incorporation: _____ Zip Code: _____
   Phone Number: ( ) _____ Fax Number: ( ) _____
   Email address: _____

2. Bidding as: an individual __; a partnership __; a corporation __; a joint venture __

3. If a partnership, list names and addresses of partners; if a corporation, list names of officers, directors, shareholders, and state of incorporation; if joint venture, list names and address of ventures' and the same if any venture are a corporation for each such corporation, partnership, or joint venture:

   _____
   _____
   _____
   _____

4. Bidder is authorized to do business in the State of Florida: ☐ Yes ☐ No

   For how many years? _____

5. Your organization has been in business (under this firm's name) as a

   _____

   Is this firm in bankruptcy? _____

6. Attach a list of projects where this specific type of Work was performed.

BIDDER: _____

7. Is this firm currently contemplating or in litigation? Provide summary details.

_____

_____

_____

8. Have you ever been assessed liquidated damages under a contract during the past five (5) years? If so, state when, where (contact name, address and phone number) and why.

_____

_____

_____

9. Have you ever failed to complete Work awarded to you? Or failed to complete projects within contract time? If so, state when, where (contact name, address, phone number) and why.

_____

_____

_____

10. Have you ever been debarred or prohibited from providing a bid to a governmental entity? If yes, name the entity and describe the circumstances.

_____

_____

_____

11. Will you subcontract any part of this Work? If so, describe which portion(s) and to whom.

_____

_____

_____

BIDDER: _____

12. If any, list MBE/DBE (with Agreement amount) to be utilized:

_____

_____

_____

13. What equipment do you own to accomplish this Work? (A listing may be attached)

_____

_____

_____

14. What equipment will you purchase/rent for the Work? (Specify which)

_____

_____

_____

15. List the following in connection with the surety which is providing the bond(s):

Surety's Name: _____

Address: _____

_____

Name, address, phone number and email of surety's resident agent for service of process in Florida:

Agent's Name: _____

Address: _____

_____

Phone: _____

Email: _____

BIDDER: _____

ATTACHMENT B

PUBLIC CONTRACTING AND ENVIRONMENTAL CRIMES CERTIFICATION

SWORN STATEMENT PURSUANT TO ARTICLE V, MANATEE COUNTY PROCUREMENT CODE

THIS FORM MUST BE SIGNED AND SWORN TO IN THE PRESENCE OF A NOTARY PUBLIC OR OTHER OFFICIAL AUTHORIZED TO ADMINISTER OATHS.

This sworn statement is submitted to the Manatee County Board of County Commissioners by

_____

[Print individual's name and title]

____ for _____[Print name of entity submitting sworn statement]

whose business address is _____

and (if applicable) its Federal Employer Identification Number (FEIN) is _____. If the entity has no FEIN, include the Social Security Number of the individual signing this sworn statement: _____

I understand that no person or entity shall be awarded or receive an Owner's Agreement for public improvements, procurement of goods or services (including professional services) or an Owner's lease, franchise, concession or management agreement, or shall receive a grant of Owner's monies unless such person or entity has submitted a written certification to Owner that it has not:

(1) been convicted of bribery or attempting to bribe a public officer or employee of Manatee County, the State of Florida, or any other public entity, including, but not limited to the Government of the United States, any state, or any local government authority in the United States, in that officer's or employee's official capacity; or

(2) been convicted of an agreement or collusion among bidders or prospective bidders in restraint of freedom of competition, by agreement to bid a fixed price, or otherwise; or

(3) been convicted of a violation of an environmental law that, in the sole opinion of Owner's Purchasing Official, reflects negatively upon the ability of the person or entity to conduct business in a responsible manner; or

(4) made an admission of guilt of such conduct described in items (1), (2) or (3) above, which is a matter of record, but has not been prosecuted for such conduct, or has made an admission of guilt of such conduct, which is a matter of record, pursuant to formal prosecution. An admission of guilt shall be construed to include a plea of nolo contendere; or

(5) where an officer, official, agent or employee of a business entity has been convicted of or has admitted guilt to any of the crimes set forth above on behalf of such an entity and pursuant to the direction or authorization of an official thereof (including the person committing the offense, if he is an official of the business entity), the business shall be chargeable with the conduct herein above set forth. A business entity shall be chargeable with the conduct of an affiliated entity, whether wholly owned, partially owned, or one which has common ownership or a common Board of Directors. For purposes of this Form, business entities are affiliated if, directly or indirectly, one business entity controls or has the power to control another business entity, or if an individual or group of individuals controls or has the power to control both entities. Indicia of control shall include, without limitation, interlocking management or ownership, identity of interests among family members, shared organization of a business entity following the ineligibility of a business entity under this Article, or using substantially the same management, ownership or principles as the ineligible entity.

(Continued)

Any person or entity who claims that this Article is inapplicable to him/her/it because a conviction or judgment has been reversed by a court of competent jurisdiction shall prove the same with documentation satisfactory to Owner's Purchasing Official. Upon presentation of such satisfactory proof, the person or entity shall be allowed to contract with Owner.

I UNDERSTAND THAT THE SUBMISSION OF THIS FORM TO THE CONTRACTING OFFICER FOR MANATEE COUNTY IS VALID THROUGH DECEMBER 31 OF THE CALENDAR YEAR IN WHICH IT IS FILED. I ALSO UNDERSTAND THAT ANY AGREEMENT OR BUSINESS TRANSACTION SHALL PROVIDE FOR SUSPENSION OF PAYMENTS, OR TERMINATION, OR BOTH, IF THE CONTRACTING OFFICER OR COUNTY ADMINISTRATOR DETERMINES THAT **SUCH PERSON OR ENTITY HAS MADE FALSE CERTIFICATION.**

_____
[Signature]

STATE OF FLORIDA
COUNTY OF _____

Sworn to and subscribed before me this ____ day of _____, 20_____ by _____

Personally known _____ OR Produced identification _____
[Type of identification]

_____ My commission expires _____
Notary Public Signature

_____
[Print, type or stamp Commissioned name of Notary Public]

Signatory Requirement - In the case of a business entity other than a partnership or a corporation, this affidavit shall be executed by an authorized agent of the entity. In the case of a partnership, this affidavit shall be executed by the general partner(s). In the case of a corporation, this affidavit shall be executed by the corporate president.

ATTACHMENT C

SWORN STATEMENT

THE FLORIDA TRENCH SAFETY ACT

THIS FORM MUST BE SIGNED IN THE PRESENCE OF A NOTARY PUBLIC OR BY AN OFFICER AUTHORIZED TO ADMINISTER OATHS.

1. This Sworn Statement is submitted with **IFB NO.17-0817OV**
2. This Sworn Statement is submitted by_____ whose business address is_____ and, if applicable, its Federal Employer Identification Number (FEIN) is_____. If the entity has no FEIN, include the Social Security Number of the individual signing this sworn statement _____.
3. Name of individual signing this Sworn Statement is: _____.
   Whose relationship to the above entity is: _____.
4. The Trench Safety Standards that will be in effect during the construction of this project shall include, but are not limited to: Laws of Florida, Chapters 90-96, TRENCH SAFETY ACT, and OSHA RULES AND REGULATIONS 29 CFR 1926.650 Subpart P, effective October 1, 1990.
5. The undersigned assures that the entity will comply with the applicable Trench Safety Standards and agrees to indemnify and hold harmless Owner and Engineer, and any of their agents or employees from any claims arising from the failure to comply with said standard.
6. The undersigned has appropriated the following costs for compliance with the applicable standards:

Trench Safety Measure (Description)	Units of Measure (LF, SY)	Unit Quantity	Unit Cost	Extended Cost
a. _____	_____	_____	$_____	_____
b. _____	_____	_____	$_____	_____
c. _____	_____	_____	$_____	_____
d. _____	_____	_____	$_____	_____

7. The undersigned intends to comply with these standards by instituting the following procedures:
   _____
   _____
   _____

THE UNDERSIGNED, in submitting this bid, represents that they have reviewed and considered all available geotechnical information and made such other investigations and tests as they may deem necessary to adequately design the trench safety system(s) to be utilized on this project.

_____

(AUTHORIZED SIGNATURE / TITLE)

SWORN to and subscribed before me this _____ day of _____, 20_____.

(Impress official seal)

Notary Public, State of Florida: _____

My commission expires: _____

Angelina M. Colonneso
CLERK OF THE CIRCUIT COURT AND COMPTROLLER OF MANATEE COUNTY
1115 Manatee Avenue West, Bradenton, Florida 34205 - Phone (941) 749-1800 – Fax (941) 741-4082
P.O. Box 25400, Bradenton, Florida 34206 - www.manateeclerk.com

ATTACHMENT D: E PAYABLES APPLICATION

Company name_____

Contact person_____

Phone number_____

Email Address_____

FINANCE USE ONLY

Open orders: YES or NO

PEID _____

CREATE DATE _____

CONFIRMED WITH _____
Name and phone number

IFAS _____

BANK _____

INITIALS_____

Return completed form to:

Via email to: lori.bryan@manateeclerk.com

Via fax to: (941) 741-4011

Via mail:

PO Box 1000

Bradenton, Fl 34206

Revised: September 30, 2015

Attachment E

VENDOR CERTIFICATION REGARDING
SCRUTINIZED COMPANIES LISTS

I am agent authorized by the company responding to this solicitation to make the following certification: I hereby certify that the company has reviewed Florida Statutes § 287.135, and that after such review, the company is not prohibited by the terms of that statute from entering into an agreement with Manatee County for the commodities and/or services which are the subject of this solicitation. I further acknowledge that my submission of a false certification may subject me and/or my company to civil penalties, attorney's fees, and/or costs.

Vendor Name:_____

Vendor FEIN:_____

Address:_____

City:_____ State:_____ Zip:_____

Certified by:_____

Who is authorized to sign on behalf of the company listed above.

Authorized Signature:_____

Print Name:_____

Title:_____

Date:_____

SPECIFICATIONS

Division 1 - Division 16

ADA BOARDING, BASE PADS
ADA BOARDING PADS W/SHELTER SLABS
ADA BOARDING PADS W/ BENCH SLABS

MANATEE COUNTY PUBLIC WORKS
1022 26th Avenue East
Bradenton, FL 34208

September, 2013

May 2017, Update to Florida Building Code

Specifications
Division 1 - Division 16

ADA BOARDING, BASE PADS
ADA BOARDING PADS SHELTER SLABS
ADA BOARDING PADS W/ BENCH SLABS

MANATEE COUNTY PUBLIC WORKS
1022 26th Avenue East
Bradenton, FL 34208

September, 2013
May 2017, Update to Florida Building Code

TABLE OF CONTENTS

MANTEE COUNTY PUBLIC WORKS
ADA BOARDING PAD PROJECT

END
TABLE OF CONTENTS

SECTION 01005

ADMINISTRATIVE PROVISIONS

PART 1 GENERAL

1.01 WORK COVERED BY CONTRACT DOCUMENTS

A. The Base Bid shall be all Work associated with the construction of a site specific Americans with Disabilities Act (ADA) bus boarding pad for the Manatee County Public Works Department located in Manatee County, Florida.

There are three (3) separate drawing packages provided on 11" x 17" with one (1) Bid Form which consists of:

(1) ADA Boarding Pads, Base Bid
(2) ADA Boarding Pads W/Bench Slabs
(3) ADA Boarding Pads W/ Shelter Slabs

County Project Manager shall provide the Contractor location and details of the ADA Pads required for installation.

B. All applicable work shall conform to the 2014, Fifth Edition of the Florida Building Code, latest Americans with Disabilities Act and all applicable codes and ordinances.

1.02 SEQUENCE OF CONSTRUCTION

A. The site work and construction shall be coordinated with the Manatee County Project Manager.

1.03 COORDINATION

A. Coordinate work of the various Sections of Specifications to assure efficient and orderly sequence of installation of construction elements, with provisions for accommodating items Installed later.

1.04 FIELD ENGINEERING

A. The Contractor shall provide field engineering services; establish grades, lines and levels, by use of a recognized engineering surveyor who is registered and licensed in the State of Florida. Contractor shall be responsible for all surveying fees incurred.

B. Control datum for survey is that shown on Drawings. The Contractor shall locate the reference points and the Contractor shall protect and control those referenced points.

1.05 REFERENCE STANDARDS

A. For products specified by association or trade standards, comply with requirements of the standard, except when more rigid requirements are specified or are required by applicable codes.

B. The date of the standard and / or code is that in effect as of the contract date, except when a specific date is specified.

1.06 CONFLICTS IN THE DOCUMENTS

A. Should conflicts arise between the contract documents and the specifications, the contractor Shall report eh discrepancy to the Owner.

B. Should conflicts arise between the contract documents and the specifications, the more stringent criteria shall apply. If this does not apply, the specifications shall take precedence.

PART 2 PRODUCTS

Not Used.

Part 3 EXECUTION

Not Used

END OF SECTION

SECTION 01019

CONTRACT CONSIDERATIONS

PART 1 GENERAL

1.01 CONTRACTOR WARRANTIES

A. The County shall also require the successful Contractor to represent and warrant that:

1. The construction schedule and budget include reasonable contingencies and reserves for design and plan revision, modifications, coordination, clarification or interpretation that may reasonably be anticipated on a project of this type.

   Clarification: No specific contingency amount will be determined by the County. Pricing provided by the Contractor shall include all costs for furnishing all labor, equipment and / or materials, incidentals required for the completion of the Work in accordance with and in the manner set forth and described in the Contract documents.

2. Construction plans and specifications are two dimensional instruments of professional service and usually require some degree of revision, interpretation, coordination, clarification or modification as actual construction presents them in three dimensions during the construction phase.

3. The County and the Architect have exercised reasonable care in endeavoring to coordinate the architectural, mechanical and structural design into a cohesive set of plans and specifications. However, the General Contractor acknowledges that it is not possible to address every element of coordination during the design process and some coordination errors or deficiencies probably will be encountered during the construction phase of the project.

1.02 APPLICATIONS FOR PAYMENT

A. Each Application for Payment shall be consistent with the previous applications and payments as reviewed by the County's representative and paid for by the County.

   1. The Initial Application for Payment, the Application for Payment at time of Substantial Completion, and Final Application for Payment involve additional requirements. See items G, I, J and K of this section.

B. Payment Application Forms: Use the Manatee County's most updated form as the form for Application for Payment. Form given at the Preconstruction Conference.

C. Application Preparation: Complete every entry on the form, including notarization and execution by person authorized to sign legal documents on behalf of the County. Incomplete applications will be returned without action.

   1. Entries shall match data on the Bid Form data.

   2. Include amounts of Change Orders and Construction Change Directives issued prior to the last day of the construction period covered by the application.

E. Transmittal: Submit three (3) original executed copies of each Application for Payment to the Project Manager by means ensuring receipt within 24 hours; one copy shall be complete, including waivers of lien and similar attachments, when required.

1. Transmit each copy with a transmittal form listing attachments, and recording appropriate information related to the application in a manner acceptable to the Project Manager

F. Waivers of Mechanics Lien: With each Application for Payment submit waivers of mechanics liens form subcontractors and suppliers for the construction period covered by the previous application.

1. Submit partial waivers on each item for the amount requested, prior to deduction of retainage on each item.
2. When an application shows completion of an item, submit final or full waivers.
3. The County reserves the right to designate which entities involved in the work must submit waivers.
4. List all Subcontractors start and finish dates to substantiate any Notice to owner received by the Project manager.

G. Pictures of the work areas shall be included with each Application for Payment per location.

H. Initial Application for Payment: Administrative actions and submittals that precede or coincide with the submittal of the first Application for Payment include the following:

1. List of principal subcontractors.
2. List of principal suppliers.
3. Schedule of Values
4. Approved Contractor Construction Schedule (preliminary if not final).
5. Schedule of principal products
6. Schedule of unit prices (if applicable).
7. Submittal schedule (preliminary if not final).
8. List of Contractor's staff assignments.
9. Copies of building permits for trades requiring separate permits.
10. Copies of authorizations ad licenses from governing authorities for performance of the Work.
11. Initial progress report.
12. Report of Pre-construction Meeting.
13. Initial settlement survey and damage report (if required).
14. Listing of all long lead procurement items monthly applications for payment **will** be accompanied with updated schedule and review of as-built drawings.

I. Interim Application for Payment: Payment will be processed once a month. No applications will be processed without receipt of previous month's waiver of liens described in subsection F above. Payment for item will be based on percentage completed as determined and approved by the County Project Manager or Invoice for store materials. Retainage (10%) will be held for al interim applications.

J. Administrative actions and submittals that shall proceed or coincide with Substantial Completion Payment. Substantial Completion as defined per the County's **General Conditions** and shall include:

1. Occupancy permits and similar approvals
2. Warranties (guarantees) and maintenance agreements. The warranty shall be for one (1) year from acceptance of each shelter slab.
3. Change-over information related to Owner's occupancy, use, operation and maintenance.
4. Final cleaning.
5. Application for reduction of retainage and consent of surety.
6. List of incomplete Work, recognized as exceptions to Project Manager Certificate of Substantial Completion.

K. Final payment Application: Administrative actions and submittals which must precede or coincide with submittal of final payment. Application for Payment includes the following:

1. Completion of Project Close-out requirements.
2. Completion of items specified for completion after Substantial Completion
3. Assurance that unsettled claims will be settled.
4. Assurance that all work has been completed and accepted.
5. Proof that taxes, fees and similar obligations have been paid.
6. Removal of surplus materials, rubbish and similar elements.

PART 2 PRODUCTS

Not used.

PART 3 EXECUTION

Not used.

END OF SECTION

SECTION 01200

COORDINATION AND MEETINGS

PART 1 GENERAL

1.01 COORDINATION

A. Coordinate scheduling, submittals and work of the various Sections of Specifications to assure efficient and orderly sequence of installation of interdependent construction elements with provisions for accommodating items installed later.

B. Coordinate completion and clean up of work of separate sections in preparation for Substantial Completion.

1.02 FIELD ENGINEERING

A. The Contractor shall provide and pay for all surveying.

B. The Contractor shall locate and protect survey control and reference points.

C. Control datum for survey is that established by County provided survey and shown on Drawings.

D. The Contractor shall provide field engineering services. Establish elevations, lines, and levels, utilizing recognized engineering survey practices.

1.03 PRECONSTRUCTION CONFERENCE

A. County will schedule a conference after Notice of Award.

B. Attendance Required: County and Contractor.

C. Minimum Agenda:

1. Verification of need for additional Contract Documents.

2. Submission of list of Subcontractors, list of Products, schedule of values, and progress schedule.

3. Designation of personnel representing the parties in Contract and County.

4. Procedures and processing of field decisions, submittals, substitutions, applications for payments, proposal request, Change Orders and Contract closeout procedures.

5. Scheduling.

6. Construction site access.

1.04 PROGRESS MEETINGS

A. Schedule and administer weekly meetings throughout progress of the work.

B. Make arrangements for meetings, prepare agenda with copies for participants, preside at meetings, record minutes, and distribute copies within three days to the County, participants, and those affected by decisions made.

C. Provide an updated schedule at every meeting, address areas of work (especially critical path tasks) and corrective action to be taken

D. Attendance Required: Project manager, Superintendent, and County.

E. Agenda:

1. Review minutes of previous meetings.
2. Contractors report.
3. Review of schedule
4. Review of old business.
5. New business.

PART 2 PRODUCTS

Not used.

PART 3 EXECUTION

Not used.

END OF SECTION

SECTION 01300

SUBMITTALS

PART 1 GENERAL

1.01 SUBMITTAL PROCEDURES

A. Transmit each submittal package per Specification Section with County approved transmittal form. All submittals that do not include total package per specification section will be returned un-reviewed. Each submittal shall include the specification number followed by the sequential submittal number.

B. Re-submittals are to have original number with an alphabetic suffix noting the original status of the submittal, such as R-1, R-2, etc.

C. Identify Project, Contractor, Subcontractor or supplier; pertinent Drawing sheet and detail number(s), and Specification Section number, as appropriate.

D. On each submittal and copy apply Contractor's stamp, signed or initialed certifying that review, verification of products required, field dimensions, adjacent construction work, and coordination of information, is in accordance with the requirements of the work and Contract Documents.

E. Schedule submittals to expedite the Project according to approved schedule, and deliver to address provided by the. Coordinate submission of related items. Forward a copy of entire submittal to County.

F. Identify variations from Contract Documents which may be detrimental to successful performance of the completed work. Failure to identify variations will be considered to mean that the Contractor intends to install the work with no variation from the Contract Documents.

G. Revise and resubmit submittals as required, identify all changes made since previous submittal. Re-submittals shall have original submittal number with suffix letter as noted in B above.

I. Distribute copies of reviewed submittals to all suppliers and subcontractors impacted by the submittal. Do not allow work to be done using un-reviewed submittals. Instruct suppliers and subcontractors to promptly report any inability to comply with provisions.

1.02 SHOP DRAWINGS

A. Submit 3 sets of all shop drawing, 2 of which will be retained by the County. Provide additional shop drawings as required to be returned for the proper coordination of the work with suppliers and subcontractors. The exact number of shop drawings will be verified at the pre-construction conference.

B. After review, reproduce and distribute in accordance with Article on Procedures above and for Record Documents.

1.03 PRODUCT DATA

A. Submit 3 sets of all submittals, 2 of which will be retained by the County. The contractor shall provide additional copies of the submittal as required to be returned for the proper coordination of the work with suppliers and subcontractors. The exact number of copies will be verified at the pre-construction conference.

B. Mark each copy to identify applicable products, options, and other data. Supplement manufacturers' standard data to provide information unique to this Project.

C. After review, distribute in accordance with Article on Procedures above and provide copies for Record Documents.

PART 2 PRODUCTS

Not used.

PART 3 EXECUTION

Not used.

END OF SECTION

SECTION 01305
MODIFICATION PROCEDURES

PART 1 GENERAL

1.01 SUMMARY

A. This section specifies administrative and procedural requirements for handling and processing Contract modifications.

1.02 MINOR CHANGES IN THE WORK

A. Supplemental instructions authorizing minor changes in the work, not involving an adjustment to the Contract Sum or Contract Time, will be issued by the Project Manager.

1.03 CHANGE ORDER PROPOSAL REQUESTS

A. County-initiated Proposal Requests: Proposed changes in the work that will require adjustments to the Contract Sum or Contract Time will be issued by the Project Manager, with a detailed description of the proposed change and supplemental or revised Drawings and Specifications, if necessary.

1. Proposal requests issued by the Project Manager are for informational purposes only. Do not consider them instruction either to stop work in progress, or to execute the proposed changes.

2. Unless otherwise indicated in the proposal request, within 10 days of receipt of the proposal request, submit to the Project Manager from the County's review, an estimate of cost necessary to execute the proposed change.

   a. Include a list of quantities of products to be purchased and unit costs, along with the total amount of purchases to be made. Where requested, furnish survey data to substantiate quantities.

   b. Indicate applicable taxes, delivery charges, equipment rental, and amounts of trade discounts.

   c. Include a statement indicating the effect the proposed change in the work will have on the Contract Time.

   d. Contractor and subcontractors will provide a complete detailed labor and material breakdown to justify change order request amounts.

B. Contract-Initiated Change Order Requests: When latent or other unforeseen conditions in mutual accord with the County Representative's finding require modifications to the Contract, the Contractor may propose changes by submitting a request for a change to the County.

1. Include a statement outlining the reasons for the change and the effect of the change on the work. Provide a complete description of the proposed change. Indicate the effect of the proposed change on the Contract Sum or Contract Time.

2. Include a list of quantities of products to be purchased and unit costs, along with the total amount of purchases to be made. Where requested, furnish survey data to substantiate quantities.

3. Indicate applicable taxes, delivery charges, equipment rental, and amounts of trade discounts.

4. Comply with requirements regarding product substations if the proposed change in the work required that the substitution of one product or system for a product or system not specified.

PART 2 PRODUCTS

Not used.

PART 3 EXECUTION

Not used.

END OF SECTION

SECTION 01400

QUALITY CONTROL

PART 1 GENERAL

A. Maintain quality control over suppliers, manufacturers, products, services, site conditions and workmanship to produce work of specified quality.

1.02 WORKMANSHIP

A. Comply with industry standards except when more restrictive tolerances or specified requirements indicate more rigid standards or more precise workmanship.

B. Perform work by persons qualified to produce workmanship of specified quality. Refer to individual specifications sections for requirements for approvals by product manufacturers.

1.03 TESTING LABORATORY SERVICES

A. The Contractor shall employ and pay for services of an Independent Testing Laboratory to perform inspections, tests and other services required by individual Specifications Sections.

B. Services will be performed in accordance with requirements of governing authorities and with standards specified in each technical; specification section.

C. Reports will be submitted to the Contractor and the County indicating observations and results of tests, indicating compliance or non-compliance with specified standards and with Contract Documents.

D. Contractor shall cooperate with Testing Laboratory personnel including scheduling of the testing, furnish tools, samples of materials, design mix, storage and assistance as requested.

1. Notify County and Testing Laboratory at least 24 hours prior to expected time for operations requiring testing services. Changes by the Testing Laboratory for waiting time and cancellations without prior notification shall be paid by the Contractor.

E. Any retesting required for failed or unresponsive tests will be paid by the contractor. The Contractor shall directly reimburse the County for the cost as stated above or will include the cost as a credit to the County which will be reflected in the Request for Payment.

PART 2 PRODUCTS

Not used.

PART 3 EXECUTION

Not used.

END OF SECTION

SECTION 01600

PRODUCTS

PART 1 GENERAL

1.01 REQUIREMENTS INCLUDED

A. Products.

B. Transportation and Handling.

C. Storage and Protection

D. Product Options.

E. Products List.

F. Substitutions.

1.02 PRODUCTS

A. Products include material.

B. Comply with Specifications and referenced standards as minimum requirements.

C. Components required to be supplied in quantity within a Specification section shall be the same and shall be interchangeable.

1.03 TRANSPORTATION AND HANDLING

A. Transport products by methods to avoid product damage; deliver in undamaged condition in manufacturer's unopened containers or packaging, dry.

B. Provide equipment and personnel to handle products by methods to prevent soiling or damage.

C. Promptly inspect shipments to assure that products comply with requirements, quantities are correct and products are undamaged.

1.04 STORAGE AND PROTECTION

A. Store products in accordance with manufacturer's instructions, with seals and labels intact and legible.

B. Arrange storage to provide access for inspection. Periodically inspect to assure products are undamaged and are maintained under required conditions.

PART 2 PRODUCTS

Not Used.

PART 3 EXECUTION

Not Used.

END OF SECTION

SECTION 01700

PROJECT CLOSEOUT

PART 1 GENERAL

1.01 REQUIREMENTS INCLUDED

Comply with requirements stated in Conditions of the Contract and in Specifications for administrative procedures in closing out the work.

1.02 SUBSTANTIAL COMPLETION

A. The Contractor shall submit the following items when the Contractor considers the work to be substantially complete:

1. A written notice that the work or designated portion thereof, is substantially complete.
2. A list of items to be completed or corrected.

B. Within a reasonable time after receipt of such notice, the County shall make an inspection to determine the status of completion.

C. If the County determines that the work is not substantially complete:

1. The County shall notify the Contractor in writing, stating the reasons.
2. The contractor shall remedy the deficiencies in the work and send a second written notice of substantial completion to the County.
3. The County shall re-inspect the work.

1.03 FINAL INSPECTION

A. When the Contractor considered the work to be complete, he shall submit written certification stating that:

1. The work has been inspected for compliance with Contract Documents
2. The work has been completed in accordance with Contract Documents.
3. The work is completed and ready for final inspection.

B. The County shall make an inspection to verify the status of completion after receipt of such certification.

C. If the County determines that the work is incomplete or defective:

1. The County shall promptly notify the Contractor in writing, listing the incomplete or defective work.
2. The Contractor shall take immediate steps to remedy the stated deficiencies and send a second written certification to County that the work is complete.
3. The County shall re-inspect the work.

D. Upon finding the work to be acceptable under the Contract Documents, the County shall request the Contractor to make closeout submittals.

E. For each additional inspection beyond a total of two (2) inspections for substantial and final completion due to the incompleteness of the work, the Contractor shall reimburse the County's fees.

1.04 FINAL ADJUSTMENT OF ACCOUNTS

A. Submit a final statement of accounting to the County.

B. Statement shall reflect all adjustments to the Contract Sum:

1. The original Contract Sum.
2. Additions and deductions resulting from:
   a. Previous Change Orders
   b. Unit Prices
   c. Penalties and Bonuses
   d. Deductions for Liquidated Damages
   e. Other Adjustments
3. Total Contract Sum, as adjusted.
4. Previous payments.
5. Sum remaining due.

C. Project Management shall prepare a final Change Order, reflecting approved adjustments to the Contract Sum which were not previously made by Change orders.

PART 2 PRODUCTS (NOT USED)

PART 3 EXECUTION (NOT USED)

END OF SECTION

SECTION 01710

CLEANING

PART 1 GENERAL

1.01 REQUIREMENTS INCLUDED

Execute cleaning during progress of the work and at completion of the work, as required by the General Conditions.

1.02 DISPOSAL REQUIREMENTS

Conduct cleaning and disposal operations to comply with all Federal, State and Local codes, ordinances, regulations and anti-pollution laws.

PART 2 PRODUCTS

2.01 MATERIALS

A. Use only those cleaning materials which will not create hazards to health or property and which will not damage surfaces.

B. Use only those cleaning materials and methods recommended by manufacturer of the surface material to be cleaned.

C. Use cleaning materials only on surfaces recommended by cleaning material manufacturer.

PART 3 EXECUTION

3.01 DURING CONSTRUCTION

A. Execute periodic cleaning to keep the work, the site and adjacent properties free from accumulation of waste materials, rubbish and wind-blown debris, resulting from construction operations.

B. Provide on-site containers for the collection of waste materials, debris and rubbish.

C. Remove waste materials, debris and rubbish from the site periodically and dispose of at legal disposal areas away from the site.

3.02 DUST CONTROL

A. Clean interior spaces prior to the start of finish painting and continue cleaning on an as-needed basis until painting is finished.

B. Schedule operations so that dust and other contaminants resulting from cleaning process will not fall on wet or newly-coated surfaces.

3.03 FINAL CLEANING

A. Employ skilled workmen for final cleaning.

B. Broom clean exterior paved surfaces; rake clean other surfaces of the grounds.

C. Prior to final completion or County occupancy, Contractor shall conduct an inspection of sight-exposed interior and exterior surfaces and all work areas to verify that the entire work is clean.

END OF SECTION

SECTION 02230

SITE WORK AND FOUNDATION EXCAVATIONS AND EARTHWORK

PART 1 GENERAL

1.01 SECTION REQUIREMENTS

A. Traffic: Minimize interference with adjoining roads, streets, walks, and other adjacent occupied or used facilities during site-clearing operations.

B. Salvable Improvements: Carefully remove items indicated to be salvaged and store on Owner's premises where indicates.

C. Notify utility locator service for area where Project is located before site clearing.

PART 2 PRODUCTS

Not Applicable.

PART 3 EXECUTION

3.01 GENERAL

A. Protect and maintain benchmarks and survey control points from disturbance.

B. Install erosion and sedimentation control measures before site clearing.

C. Protect site improvements to remain from damage. Restore damaged improvements to condition existing before start of site clearing.

D. Locate and clearly flag trees and vegetation to remain or to be relocated.

E. Protect remaining trees and shrubs from damage and maintain vegetation. Employ a licensed arborist to repair tree and shrub damage. Restore damaged vegetation. Replace damaged trees that cannot be restored to full growth, as determined by arborist.

F. Do not store materials or equipment or permit excavation within drip line of remaining trees.

G. Locate, identify, disconnect, and seal or cap off utilities indicated to be removed.

3.02 SITE CLEARING

A. Strip topsoil. Stockpile topsoil that will be reused in the Work.

B. Remove obstructions, trees, shrubs, grass, and other vegetation to permit installation of new construction. Removal includes digging out stumps and obstructions and grubbing roots.

C. Remove existing above-and below-grade improvements as indicated and as necessary to facilitate new construction.

D. Remove slabs, paving, curbs, gutters, and aggregate base as required for the new pad construction.

E. Dispose of waste materials, including trash, debris, and excess topsoil, off Owner's property. Burning waste materials on-site is not permitted.

3.03 SITE PREPARATION

A. Prior to construction, the location of any existing underground utility lines within the construction area should be established. Notify the Owner of any interfering utility lines within the construction area. Abandoned underground pipes shall be removed or plugged.

B. The site shall be cleared; this primarily includes the removal of the ground brush, root mats or other deleterious and organic materials encountered. Undesirable material shall be removed prior to beginning further construction at the site. As a minimum, the clearing operations shall extend at least 5 feet beyond the building lines. Any "topsoil" removed from the building areas shall be stockpiled in designated locations for use in landscaped areas. Any excavations or cavities formed by the removal of organic material or ground brush should be filled with clean compacted structural fill.

C. Following the clearing operations, the exposed subgrade should be evaluated by the Owner and proofrolled to confirm that all unsuitable materials have been removed. The proofrolling should consist of compaction with a large diameter, heavy static drum roller or fully-loaded 2 cubic yard capacity, rubber tired, front-end loader. Large vibratory compaction equipment will not be used due to vibration concerns relating to the masonry structures that exist on-site. Careful observations should be made during proofrolling to help identify any areas of soft yielding soils that may require overexcavation and replacement. Notify the Owner of suspect areas.

D. A minimum of ten (10) overlapping passes shall be made by the static roller over the building areas, with the successive passes aligned perpendicular. Within the building area, the fill soils and natural ground, to a minimum depth of one (1) foot below stripped grade, shall be compacted to a dry density of at least 95% of the modified Proctor maximum dry density (ASTM D-1557).

E. Following satisfactory completion of the initial compaction on the existing grade, the proposed project area may be brought up to finished subgrade levels. Fill should consist of fine sand with less than 12% passing the No. 200 sieve, free of rubble, organics, clay, debris and other unsuitable material. Native soil may be used for fill if approved. Submit tests for approval of native soil and/or imported fill. Approved sand fill should be placed in loose lifts not exceeding 12 inches in thickness and should be compacted to a minimum of 95% of the modified Proctor maximum dry density. Density tests to confirm compaction will be performed in each fill lift before the next lift is placed. Testing is by Owner.

F. Control soil moisture contents in order to facilitate proper compaction. If additional moisture is necessary to achieve compaction objectives, then water should be applied in such a way that it will not cause erosion or removal of the subgrade soils. Moisture content within the fill soil should be controlled to within ± 2% of optimum as established in ASTM D-1557 to help insure

development of both density and stability during compaction operations.

G. All slab/foundation excavations will be observed by the Owner to explore the extent of any loose, soft, or otherwise undesirable materials. If the foundation excavation is approved, the bottom of foundation excavations should be compacted to develop a minimum density requirement of 95% of the modified Proctor maximum dry density (ASTM D-1557), for a minimum depth of one (1) foot below the bottom of the footing depth, as determined by field density compaction tests. Backfill soils placed adjacent to existing footings should be carefully compacted with a light rubber-tired roller or vibratory plate compactor to avoid damaging the footings or walls. Approved sand fills, to provide foundation embedment constraint, should be placed in loose lifts not exceeding six (6) inches and should be compacted to a minimum of 95% of the modified Proctor maximum dry density.

H. If soft pockets are encountered in the footing excavations, the unsuitable materials shall be removed and the footings may be located at a lower elevation on firm, acceptable material, or the proposed footing elevation may be re-established by backfilling after the undesirable material has been removed. This backfilling may be done with a very lean concrete or with a well-compacted, suitable fill such as clean sand, gravel, or crushed Florida Department of Transportation (FDOT) No. 57 or FDOT No. 67 stone. Sand backfill shall be compacted to a dry density of at least 95% of the modified Proctor maximum dry density (ASTM D-1557), as previously described.

I. Immediately prior to reinforcing steel placement, the bearing surfaces of all footing and floor slab areas shall be compacted using hand operated mechanical tampers. In this manner, any localized areas which have been loosened by excavation operations should be adequately re-compacted.

J. After inspection, approval and final compaction of footing bottoms the foundation concrete shall be placed as quickly as possible to avoid exposure of the footing bottoms to wetting and drying. Surface run-off water should be drained away from the excavations and not be allowed to pond. The foundation concrete should be placed during the same day the excavation is made. If it is required that the footing excavations be left open for more than one day, they should be protected to reduce evaporation or entry of moisture.

END OF SECTION

SECTION 02270

EROSION CONTROL

PART 1 - GENERAL

1.01 WORK INCLUDED

A. The work of this section consists of furnishing all necessary labor, equipment, material and transportation necessary to provide temporary and permanent erosion and sediment control as required by appropriate government agency permits, the plans and as noted in this specification.

PART 2 - EXECUTION

2.01 INSTALLATION

A. Install temporary erosion and sediment control items prior to clearing and commencing earthwork or as soon as practical as sitework progresses.

2.02 PROTECTION

A. Stabilization of Denuded Areas: No disturbed area may be denuded for more than thirty (30) calendar days, (excluding rights-of-way) unless otherwise authorized by the Owner's Engineer. During construction, denuded areas shall be covered by mulches such as straw, hay, filter, seed and mulch, sod or some other permanent vegetation. Within sixty (60) calendar days after final grade is established on any portion of a project site, that portion of the site shall be provided with established permanent soil stabilization measures per the original site plan, whether by impervious surface or landscaping.

B. Protection and Stabilization of Stockpiles: Fill material stockpiles shall be protected at all times by on-site drainage controls which prevent erosion of the stockpiled material. Control of dust from such stockpiles may be required, depending upon their location and the expected length of time the stockpiles will be present. In no case shall an unstabilized stockpile remain after thirty (30) calendar days.

C. Protection of Existing Storm Sewer Systems: During construction, all storm sewer inlets shall be protected by approved sediment traps such as secured hay bales, sod, stone, etc., which shall be maintained and modified as required by construction progress, and which must be approved by the Owner's Engineer.

D. Sediment Trapping Measures: Sediment basins and traps, perimeter berms, filter fences, berms, sediment barriers (hay bales), vegetative buffers and other measures intended to trap sediment and/or prevent the transportation of sediment onto adjacent properties, or into existing water bodies, must be installed, constructed or, in case of vegetative buffers, protected from disturbance, as a first step in the land alteration process.

E. Silt curtains or other filter/siltation reduction devices must be installed on the downstream side of the in channel alteration activity to eliminate impacts due to increased turbidity. Whenever stream crossings are required, properly sized temporary culverts shall be provided by the Contractor and removed when construction completed. The area of the crossing shall be restored to a condition as nearly as possible equal to that which existed prior to any construction activity.

F. Swales and Ditches: All swales, ditches and channel leading from the site shall be sodded within three (3) days of excavation. All other interior swales, etc., including detention areas will be sodded prior to issuance of as Certificate of Occupancy.

2.03 PERFORMANCE

A. Maintenance: All erosion and siltation control devices shall be checked regularly, especially after each rainfall and will cleaned out and/or repaired as required.

END OF SECTION

SECTION 02280

SOIL TREATMENT FOR TERMITE CONTROL

PART 1 - GENERAL

1.01 DESCRIPTION OF WORK

A. Provide soil treatment for termite control below grade as specified.

1.02 QUALITY ASSURANCE

A. In addition to the requirements of these specifications, comply with manufacturer's instructions and recommendations for the work, including preparation of substrate and application.

B. Engage a professional pest control operator, licensed by the State of Florida for application of soil treatment solution.

1.03 JOB CONDITIONS

A. Restrictions: Do not apply soil treatment solution until excavating, filling and grading operations are completed except as otherwise required in construction operations..

B. Ensure penetration: do not apply soil treatment during inclement weather. Comply with other handling and application instructions of the soil toxicant manufacturer.

1.04 SUBMITTALS

A. Product Data: Submit four-copies of manufacturer's technical data and application instructions. Include toxicants to be used, composition by percentage, dilution schedule, and intended application rate.

1.05 GUARANTEE

A. Furnish four-copies of written guarantee certifying that the applied soil poisoning treatment will prevent the infestation of subterranean termites. If subterranean termite activity is discovered during the guarantee period, the Contractor will re-treat the soil around the boarding pads.

B. Provide guarantee for a period of five years.

C. The Owner reserves the right to renew warranty for an additional 5-years at an additional cost.

1.06 REGULATORY REQUIREMENTS

A. Conform to applicable code for requirements for application in accordance with the EPA.

B. Comply with the general requirements of the Florida Building Code, Chapter 1 and Section 1816.

1.07 PROJECT CLOSEOUT

A. Record moisture content of soil before application, date and rate of application, areas of application, diary of toxicity meter readings and corresponding soil coverage.

PART 2 - PRODUCTS

2.01 SOIL TREATMENT SOLUTION

A. EPA approved, emulsible concentrate insecticide for dilution with water, specially formulated to prevent infestation by termites. Fuel oil is not permitted as a diluent. Provide a working solution of one of the following chemical elements and concentrations:

1. Dursban T.C.: 1.0% in water emulsion.

2. Prevail TC: 0.60% in water emulsion.

3. Pryfom: 0.75% in water emulsion.

B. Other solutions may be used as recommended if acceptable to local governing authorities and the EPA. Use only soil treatment solutions, which are not injurious to planting.

PART 3 - EXECUTION

3.01 INSPECTION

A. Examine the areas and conditions under which soil treatment for termite control is to be installed and notify the Owner in writing of conditions detrimental to the proper and timely completion of the work. Do not proceed with the work until unsatisfactory conditions have been corrected.

B. Verify that final grading is completed.

3.02 APPLICATION

A. Surface Preparation: Remove foreign matter that could decrease effectiveness of treatment on areas to be treated. Loosen, rake and level soil to be treated, except previously compacted areas under slabs and foundations.

B. Application Rates: Apply soil treatment solution as specified and in strict accordance with Manufacturer's recommendation for mixing and application.

1. Allow not less than 12 hours for drying after application, before beginning concrete placement or other construction activities.

2. Post signs in the areas of application warning workers that soil poisoning has been applied. Remove signs before areas are covered by other construction.

3. Reapply soil treatment solution to areas disturbed by subsequent excavation or other construction activities following initial application.

END OF SECTION

SECTION 02510

CONCRETE SIDEWALKS

PART 1 - GENERAL

1.01 WORK INCLUDED

A. The work included in this Section consists of furnishing all labor, material equipment and transportation for the construction of the sidewalks and ADA boarding pads to the lines and grades as shown on the Drawings and verified in the field for project specific projects.

1.02 SUBMITTALS

A. All materials specified shall be certified by the producer or manufacturer that the furnished material meets the specific requirements of the specifications.

PART 2 - PRODUCTS

2.01 MATERIALS

A. Concrete: Concrete shall be Class B that conforms to the requirements of Section 03000.

B. Welded Wire Fabric: Welded wire fabric shall conform to the requirements of Section 03000.

C. Preformed Joint Filler: Preformed joint filler shall be non-extruding and resilient bituminous type and shall conform to the requirements of AASHTO Designation M 153 or AASHTO Designation M 213.

PART 3 - EXECUTION

3.01 PREPARATION

A. Subgrade Condition:

1. The finished subgrade shall be maintained in a smooth, compact condition and any areas which are disturbed prior to placing of the concrete shall be restored at the Contractor's expense. The subgrade shall be moist at the time the concrete is placed. Water shall be uniformly applied ahead of the pouring operations as directed by the Owner. Large boulders and other obstructions shall be removed to a minimum depth of 6 inches below the finished subgrade elevation, and the space shall be backfilled with sand, base course material or other suitable material which shall be thoroughly compacted by rolling or tamping.

2. The subgrade shall be accurately trimmed to the required elevation with a 1/4-inch tolerance. High areas shall be trimmed to proper elevation. Low areas may be filled with suitable material and compacted to the specified density or filled with concrete integrally with the placing of the pavement.

B. Setting Forms: The forms shall be accurately set to line and grade and such that they rest firmly, throughout their entire length upon the compacted subgrade surface. Forms shall be

joined neatly and tightly and braced to resist the pressure of the concrete and the finished operations. The alignment and grade of all forms shall be approved before and immediately prior to the placing of concrete.

C. Mixing Concrete: Concrete shall be mixed in accordance with the requirements of Section 03000.

3.02 INSTALLATION

A. Placing Concrete:

1. The concrete shall be distributed on the subgrade to such depth that, when it is consolidated and finished, the thickness required by the Drawings will be obtained at all points and the surface will at no point be below the grade specified for the finished surface. The concrete shall be deposited on the subgrade in a manner which will require as little rehandling as possible. Placing of the concrete shall be continuous between transverse joints, without the use of intermediate bulkheads.

2. Reinforcement shall be placed as shown on the Drawings and shall be maintained at this location during the placing and finishing operations.

B. Striking-off, Consolidating And Finishing Concrete: Immediately after the placing, the concrete shall be struck off, consolidated and finished, to produce a finished product conforming to the cross section, width and surface finish required by the Drawings and Specifications.

C. Straightedging and Surface Corrections:

1. After floating has been completed and the excess water removed, but while the concrete is still in a plastic state, the surface of the concrete shall be tested for trueness with an accurate 10-foot straightedge. The straightedge shall be furnished by the Contractor. The straightedge shall be held in successive positions parallel to the walk center line, in contact with the surface, and the whole area tested from one side of the slab to the other as necessary. The advance along the walk shall be in successive stages of not more than one-half the length of the straightedge. Any depressions shall be immediately filled with freshly mixed concrete and struck-off, consolidated and refinished. High areas shall be cut down and refinished. Straightedge testing and surface correction shall continue until the entire surface appears to conform to the required grade and cross section. All surface irregularities exceeding 1/4 inch in a 10 foot shall be corrected.

D. Final Finish: As soon as the water sheen has disappeared and just before the concrete becomes non-plastic, all edges, including expansion joint edges, shall be finished with an edging tool having a radius of 1/4 inch. Finally the top shall be given a light broom finish perpendicular to the forms.

E. Joints:

1. Transverse Construction Joints: Transverse construction joints shall be constructed at the end of all pours and at other locations where the pouring operation are stopped for as long as 30 minutes. Construction joints, however, shall not be placed within five feet of any other transverse joint or of either end of a section of walk. If sufficient concrete has not been placed to form a slab at least five feet long, the excess concrete, back to the last preceding joint, shall be removed. The joints shall

be formed by placing a wood or metal bulkhead accurately and securely in place, in a plane perpendicular to the profile and center line of the walk. Construction joints shall have tooled edges with a 1/4-inch radius.

2. Transverse Contraction Joints: Transverse contraction joints shall be formed at five foot intervals and shall consist of planes of weakness created by an edging tool. The cut in the fresh concrete shall be perpendicular to the surface of the walk, shall extend to a depth of 1 1/2 inches below the top surface and shall have 1/4-inch radius tooled edges.

3. Transverse Expansion Joints: One half-inch expansion joints shall be formed by placing preformed joint filler around all structures and at intervals not exceeding 100 feet.

F. Curing:

1. After the finishing operations have been completed and as soon as the concrete has hardened sufficiently that marring of the surface will not occur, the entire surface and the edges of the newly placed concrete shall be water cured by misting or covering with a double thickness of burlap or other approved material kept thoroughly saturated with water.

2. The forms shall be kept wet until removed and upon removal, the curing specified herein shall be started immediately.

3. Concrete shall be cured for a period of 7 days for normal Portland cement or 4 days for high early strength cement.

4. Concrete poured in the dry shall not be submerged until it has attained sufficient strength to adequately sustain the stress involved, nor shall it be subjected to flowing water across the surface for 4 days.

G. Form Removal: After the concrete has sufficiently set a minimum of 12 hours, the Contractor shall remove the forms and shall backfill the space on each side. The earth shall be compacted and graded in a satisfactory manner without damage to the concrete work. Honeycombs shall be filled with sand cement mortar. Plastering will not be allowed on the face of the walk. Rejected walk shall be removed and replaced without additional compensation.

END OF SECTION

SECTION 02528

CONCRETE CURB, CURB AND GUTTER

PART 1 - GENERAL

1.01 WORK INCLUDED

A. The work included in this Section consists of furnishing all labor, material equipment and transportation for the construction of the curb and gutter to the lines and grades as shown on the Drawings.

1.02 SUBMITTALS

A. All materials specified shall be certified by the producer or manufacturer that the furnished material meets the specific requirements of the specifications.

PART 2 - PRODUCTS

2.01 MATERIALS

A. Concrete: Concrete shall be Class B that conforms to the requirements of Section 03000.

B. Reinforcing Steel And Welded Wire Fabric: Reinforcing steel bars and welded wire fabric shall conform to the requirements of Section 03000.

C. Preformed Joint Filler: Preformed joint filler shall be non-extruding and resilient bituminous type and shall conform to the requirements of AASHTO 153 or AASHTO Designation M 213.

D. Joint Sealer For Gutters:

1. Hot Poured Type: Joint sealer shall conform to the requirements of AASHTO Designation M 173.

   Cold Applied Type: In lieu of the hot poured type, joint sealer shall be a one or two part polysulfide base self leveling sealant for horizontal surfaces that has been developed for foot and vehicular traffic. The sealant shall be listed on the Thiokol approved product list.

PART 3 - EXECUTION

3.01 PREPARATION

A. Subgrade Condition:

1. The finished subgrade shall be maintained in a smooth, compact condition and any areas which are disturbed prior to placing of the concrete shall be restored at the Contractor's expense. The subgrade shall be moist at the time the concrete is placed. Water shall be uniformly applied ahead of the pouring operations as directed by the Owner.

2. The subgrade shall be accurately trimmed to the required elevation with a 1/4 inch tolerance. High areas shall be trimmed to proper elevation. Low areas may be filled with suitable material and compacted to the specified density or filled with concrete integrally with the placing of the pavement.

B. Setting Forms: The forms shall be accurately set to line and grade and such that they rest firmly, throughout their entire length upon the compacted subgrade surface. Forms shall be joined neatly and tightly and braced to resist the pressure of the concrete and the finished operations. The alignment and grade of all forms shall be approved before and immediately prior to the placing of concrete.

C. Mixing Concrete: Concrete shall be mixed in accordance with the requirements of Section 03000.

3.02 INSTALLATION/APPLICATION

A. Placing Concrete:

1. The concrete shall be distributed on the subgrade to such depth that, when it is consolidated and finished, the thickness required by the Drawings will be obtained at all points and the surface will at no point be below the grade specified for the finished surface. The concrete shall be deposited on the subgrade in a manner which will require as little rehandling as possible. Placing of the concrete shall be continuous between transverse joints, without the use of intermediate bulkheads.

2. Reinforcement shall be placed as shown on the Drawings and shall be maintained at this location during the placing and finishing operations.

3. Concrete shall be thoroughly consolidated against and along the faces of all forms by means of vibration. Tamping or vibration at any one location shall not continue so long as to produce puddling or the accumulation of excessive grout on the surface.

B. Striking-Off, Consolidating And Finishing Concrete:

1. Immediately after the placing, the concrete shall be struck off, consolidated and

finished, to produce a finished product conforming to the cross section, width and surface finish required by the Drawings and Specifications.

2. After the concrete has sufficiently set a minimum of 12-hours, the Contractor shall remove the forms and shall backfill the space on each side. The earth shall be compacted and graded in a satisfactory manner without damage to the concrete work. Honeycombs shall be filled with sand cement mortar. Plastering will not be allowed on the face of the curb. Rejected curb and gutter or valley gutter shall be removed and replaced without additional compensation.

C. Final Finish: As soon as the water sheen has disappeared and just before the concrete becomes non-plastic, a light broom finish shall be given to the surface.

D. Joints:

1. Transverse Construction Joints: Transverse construction joints shall be constructed at the end of all pours and at other locations where the pouring operation are stopped for as long as 30 minutes. Construction joints, however, shall not be placed within ten feet of any other transverse joint or of either end of a section of curb. If sufficient concrete has not been placed to form a slab at least ten feet long, the excess concrete, back to the last preceding joint, shall be removed. The joints shall be formed by placing a wood or metal bulk-head accurately and securely in place, in a plane perpendicular to the profile and center line of the pavement. Construction joints shall be sawed, in a manner similar to contraction joints, so that a groove will be formed for holding the joint sealing compound.

2. Transverse Contraction Joints: Transverse contraction joints shall be constructed at ten foot intervals and shall consist of planes of weakness created by sawing the surface of the hardened concrete. The cut shall be perpendicular to the surface of the pavement, and shall extend to a depth of six inches below the top of the curb and one and one-half inches below the gutter.

   a. It shall be the Contractor's responsibility to see that the sawing equipment does not damage the curb and to saw the transverse contraction joints as soon as the curb, curb and gutter has hardened to the degree that tearing and raveling are not excessive and before uncontrolled shrinkage cracking begins. If, at any time, uncontrolled cracking occurs, the Contractor will be required to modify his methods.

3. Transverse Expansion Joints: One-half inch expansion joints shall be formed by placing preformed joint filler at the ends of each radius return, around all structures, and at intervals not exceeding 500 feet.

4. Cleaning And Sealing Joints: Joints in gutters which are to be sealed, shall be filled with joint sealing material before the roadway is opened to traffic and as soon after completion of the curing period as is feasible. Just prior to sealing, each joint shall be thoroughly cleaned of all foreign material (including any membrane curing

compound) and the joint faces shall be clean and surface-dry when the sealer is applied.

a. The sealing material shall be applied to each joint to conform to the details shown on the Drawings and in accordance with the manufacturer's recommendation. The pouring shall be done in such manner that the material will not be spilled on the exposed surfaces of the concrete. Any excess material on the surface of the concrete gutter shall be removed immediately and the gutter surface cleaned.

All cracks occurring in the gutter prior to its acceptance shall be cleaned out and sealed as specified above, except that the cracks and fractures shall be completely filled with joint sealer and any excess filler material cut down level with the gutter surface.

E. Curing:

1. After the finishing operations have been completed and as soon as the concrete has hardened sufficiently that marring of the surface will not occur, the entire surface and the edges of the newly placed concrete shall be water cured by misting or covering with a double thickness of burlap, cotton mats, or other approved material kept thoroughly saturated with water.

2. The forms shall be kept wet until removed and upon removal, the curing specified herein shall be started immediately.

3. Concrete shall be cured for a period of seven (7) days for normal Portland cement or four (4) days for high early strength cement.

4. Concrete poured in the dry shall not be submerged until it has attained sufficient strength to adequately sustain the stress involved, nor shall it be subjected to flowing water across the surface for four (4) days.

END OF SECTION

SECTION 03000

CONCRETE

PART 1 GENERAL

1.01 WORK INCLUDED

A. Formwork, shoring, bracing, and anchorage.

B. Concrete reinforcement and accessories.

C. Cast-in-place concrete; ready mixed concrete; concrete placement, finishing and curing.

D. Cast-in-place concrete for specialized flooring materials.

1.02 REFERENCES

A. ACI 301 - Specifications for Structural Concrete for Buildings.

B. ACI 305 - Hot Weather Concreting.

C. ACI 315 - Details and Detailing of Concrete Reinforcement.

D. ACI 318 - Building Code Requirements for Reinforced Concrete.

E. ACI 347 - Recommended Practice for Concrete Formwork.

F. ANSI/ASTM A185 - Welded Steel Wire Fabric for Concrete Reinforcement.

G. ASTM A615 - Deformed and Plain Billet-Steel for Concrete Reinforcement.

H. ASTM C78 - Flexural Strength of Concrete (Using Simple Beam with Third Point Loading).

I. ASTM C94 - Ready-Mixed Concrete.

J. ASTM C150 - Portland Cement.

K. ASTM C171 - Sheet Materials for Curing Concrete.

L. ASTM C260 - Air Entraining Admixtures for Concrete.

M. ASTM C309 - Liquid Membrane-Forming Compounds for Curing Concrete.

N. ASTM C494 - Chemical Admixtures for Concrete.

O. ASTM D1751 - Preformed Expansion Joint Filler for Concrete Paving and Structural Construction (Non-extruding and Resilient Bituminous Types).

P. ASTM D1752 - Preformed Sponge Rubber and Cork Expansion Joint Fillers for Concrete Paving and Structural Construction.

Q. ASTM D1850 - Concrete Joint Sealer Cold Application Type.

R. AASHTO M 182-60 - Burlap Cloth Made from Jute or Kenaf.

S. FS TT-C-800 - Curing Compound, Concrete, for new and existing Surfaces.

1.03 QUALITY ASSURANCE

A. Perform work in accordance with ACI 301, ACI 304, ACI 305, ACI 315, ACI 347, ACI 318, ASTM A615, ASTM C-150 and all other applicable referenced documents, (1.03).

1.04 TESTS

A. Testing shall be as described below and the cost of testing shall be paid by the contractor.

B. Submit proposed mix design of each class of concrete for review and approval prior to commencement of work.

B. Testing firm will take cylinders and perform slump tests in accordance with ACI 301.

C. Tests of cement and aggregates will be performed to ensure conformance with requirements stated herein.

Submit data, source and certificates on proposed aggregates.

D. At least three concrete test cylinders will be taken for every 50 cu. yds. or less of each class of concrete placed each day.

E. One slump test will be taken for each set of test cylinders taken.

F. Chemical Resistance: Independent resting shall be performed to ASTM C 267-77 "Chemical Resistance of Mortars" and ASTM 39-86 "Compressive Strength of Cylindrical Concrete Specimens".

1. Concrete samples (treated and untreated) to have a design strength as listed in paragraph 2.08. No admixtures permitted.
2. Coatings to have a maximum thickness of 0.05 inches per coat with up to two coats permitted.
3. Untreated and treated specimens to be immersed for a minimum of 84 days in the following chemical solutions: hydrochloric acid, toluene, caustic soda.
4. Treated specimens after exposure, and shall have a minimum of 14% increase in compressive strength versus untreated control specimens.

G. Potable Water Approval: Independent testing shall be performed according to NSF Standard 61 and approval for use of waterproofing material on structures holding potable water shall be evidenced by NSF certification.

1.05 SHOP DRAWINGS

A. Submit shop drawings of reinforcing steel indicating sizes, spacings, shapes, locations and quantities of reinforcing steel, and wire fabric; bending and cutting schedules; splicing; and supporting and spacing devices.

B. Prepare signed and sealed shop drawings under supervision of professional structural engineer registered in State of Florida.

C. Submit product data, including manufacturer's specifications, installation instructions, and general recommendations for waterproofing applications. Also include manufacturer's certification or other data substantiating that the products comply with the requirements of the Contract Documents.

D. Test Reports: Submit for acceptance, complete test reports from approved independent testing laboratories certifying that the waterproofing system conforms to the performance characteristics and testing requirements specified herein.

E. Manufacturer's Certification: Provide certificates signed by the manufacturer or manufacturer's representative certifying that the materials to be installed comply in all respects with the requirements of this specification, and that the applicator is qualified and approved to install the materials in accordance with the manufacturer's product data.

F. Manufacturer's Field Report: Provide a copy of the report from the manufacturer's representative confirming that the surfaces to which waterproofing material is to be applied are in a condition suitable to receive the same.

1.06 Project Conditions: Comply with the manufacturer's product data regarding condition of substrate to receive waterproofing, weather conditions before and during installation, and protection of the installed waterproofing system.

PART 2 PRODUCTS

2.01 FORM MATERIALS

A. Conform to ACI 301 and ACI 347.

2.02 REINFORCING STEEL

A. Reinforcing Steel: ASTM A615, 60 yield grade billet steel deformed bars; uncoated finish. 40 yield grade only where noted on the drawings.

B. Welded Steel Wire Fabric: Plain type, ANSI/ASTM A185; coiled rolls; uncoated finish.

2.03 CONCRETE MATERIALS

A. Cement: ASTM C150, Type 1 Portland, grey color.

B. Fine and Coarse Aggregates: ASTM C33.

C. Water: Clean and not detrimental to concrete.

2.04 ADMIXTURES.

A. Air Entrainment Admixture: ASTM C260.

2.05 ACCESSORIES

A. Vapor Barrier: ASTM D2103, 6 mil thick clear polyethylene film.

B. Non-Shrink Grout: Premixed compound with non-metallic aggregate, cement, water reducing and plasticizing agents; capable of minimum compressive strength of 3000 psi in 28 days.

C. Form Release Agent: Colorless material which will not stain concrete, absorb moisture or impair natural bonding or color characteristics of coating intended for use on concrete.

D. Joint Filler: ASTM D1751 or 1752.

E. Expansion Joint Material: ASTM D1751 - Preformed Expansion Joint Filler for Concrete Paving and Structural Construction (Non-extruding and Resilient Bituminous Types).

2.06 CURING MATERIALS

A. Membrane Curing Compound: ASTM C309, or Fed. Spec. TT-C-800

B. Curing Sheets and Mats: ASTM D 2103 or AASHTO M 182-60 or ASTM C171.

2.07 CONCRETE MIX

A. Mix concrete in accordance with ASTM C94, ACI 301 and ACI 304.

B. Compressive Strength at 28 days: 3000 psi.

C. Slump: In accordance with ACI 301; 4" maximum.

PART 3 EXECUTION

3.01 GENERAL

A. Work to be in conformance with ACI 301, ACI 304, ACI 305, ACI 315, ACI 318, ACI 347 and ASTM C94.

3.02 FORMWORK ERECTION

A. Verify lines, levels, and measurement before proceeding with formwork.

B. Hand trim sides and bottom of earth forms; remove loose dirt.

C. Align form joints.

D. Do not apply form release agent where concrete surfaces receive special finishes or applied coatings which may be affected by agent.

3.03 REINFORCEMENT

A. Comply with ACI 301, ACI 315, ACI 318 and ANSI/ASTM A185.

B. Place, support, and secure reinforcement against displacement.

C. Locate and lap reinforcing splices as noted on the drawings and/or as required by ACI 318 and ACI 315.

3.04 PLACING CONCRETE

A. Notify Owner a minimum 24 hours prior to commencement of concreting operations.

B. Install vapor barrier under interior floor slabs on fill. Lap joints minimum 6 inches and seal. Extend vapor barrier to top of footing. Do not disturb vapor barrier while placing reinforcement. **The vapor barrier must be completely sealed.**

C. Concrete shall not be dropped freely over 4 feet; use pipe troughs or chutes. Placement of concrete shall be such as to avoid segregation or separation of aggregates.

D. Concrete shall be deposited nearly as possible in its final position. Large quantities shall not be deposited at one point and then run and worked along the forms. Do not move concrete horizontally with a vibrator nor garden rake. Avoid segregation of the mix.

3.05 TOLERANCES

A. Provide Class A tolerance to floor slabs according to ACI 301. **Slope as indicated on the drawings.**

3.06 REMOVAL OF FORMS

A. Do not remove forms and bracing until concrete has gained sufficient strength to carry its own weight and design loads that are liable to be imposed upon it. Verify strength of concrete by compressive test results.

3.07 FINISHING FORMED SURFACES

A. All Concrete: Fill all voids, honeycombs and other intrusions. Clean all voids, honeycombs and holes of loose concrete and debris. Fill solid with neat cement paste, 1 part cement and 1-1/2 part fine, clean sand; wet areas before filling. Remove projections, fins, irregularities and form tie ends.

B. Formed concrete surfaces exposed to view: Remove blemishes; rub to uniform texture.

C. Provide smooth rubbed finishes on vertical faces of formed concrete exposed to view as follows:

1. Smooth Rubbed Finish: On exposed, poured-in-place concrete vertical surfaces.

Fill and repair blemishes, rub finish to uniform color and texture. Use mortar mix of 1 part Portland cement and 2 parts well graded sand passing No. 30 sieve with water added to give the consistency of thick paint. Thoroughly wet surface and allow to approach surface dryness. Apply vigorously with burlap, cork or wood; scrape off excess grout with a trowel. As soon as can be accomplished without pulling mortar from voids, rub surface with burlap pads having the dry sand-cement mixture on the pads.

3.08 CURING

A. Begin curing concrete immediately after finishing. Concrete shall be protected against moisture loss and rapid temperature change for at least 10 days. Use one of the following procedures.

1. **Curing of the slab shall be 10 full days.**

2. Ponding or continuous sprinkling.

3. Application of absorptive mats or fabric or impervious sheets kept continuously wet.

4. Continuous application of steam (not exceeding 150 degrees F) or mist spray.

5. Application of liquid membrane-forming compounds conforming to ASTM C309 or Fed. Spec. TT-C-800.

6. Immediately after curing, thoroughly clean slabs of any marks, spots, stains, mortar or other debris.

END OF SECTION

MANATEE COUNTY
PUBLIC WORKS STANDARDS

PART I. UTILITIES STANDARDS MANUAL

June 2015

Manatee County
Public Works Standards

Part 1. Utilities Standards Manual

June 2015

TABLE OF CONTENTS

Note: Items not addressed by these standards shall provide a similar superior level of quality.

MANATEE COUNTY
PUBLIC WORKS STANDARDS MANUAL

PART 1 - UTILITY STANDARDS

SECTION 1.1 SITE DEVELOPMENT STANDARDS

This section 1.1 contains general standards for the construction of infrastructure in Manatee County. Subsequent sections contain more detailed standards. All improvements shall be subject to all the standards contained in this manual.

1.1.1 WATER

A. Individual private water distribution systems supplied by individual wells shall be constructed to facilitate independent connections to a public water distribution facility. All water wells constructed in Manatee County shall conform to Chapter 373 F.S., the requirements of the Southwest Florida Water Management District and theManatee County Natural Resources Division, including all provisions in the interlocal agreement between Manatee County and the Southwest Florida Water Management District.

B. The coordination and sharing of any water distribution system, excluding individual private well water supply systems, between developments shall be preferred, including installation of oversized facilities to serve a logical area. Such over sizing may be paid for, where appropriate, by the Utilities Department when designed to serve property other than that owned by the developers.

C. In the twenty-five (25) year and one hundred (100) year floodplain, all new and replacement water supply systems shall be located and designed to:

   (1) Avoid impairment to the floodplain;

   (2) Minimize contamination to the floodplain;

   (3) Eliminate infiltration of flood waters; and

   (4) Prevent contamination of the aquifers.

D. All new construction, additions, including buried storage tanks, must be anchored as necessary to prevent flotation, collapse, or lateral movement of the structure.

1.1.2 SANITARY SEWERAGE

A. General and individual sewerage systems including septic systems where allowed outside the defined EPA 201 service area or exempted by Chapter 2-31 of the Code of Ordinancesand Resolution 89-70 shall be approved by the Manatee County Health Department, Environmental Health Services and the Public Works Department. On-site sewerage systems shall be constructed in accordance with the Manatee County Health Department, Environmental Health Services regulations in such a manner as to facilitate later connection to a public collection facility including design and installation of septic systems so as to provide for eventual connection of this system to a public sewage collection system.

B. The coordination and sharing of any portion of the sewerage system between developments shall be preferred, including installation of over size facilities to serve a natural tributary area, with such oversizing paid for where appropriate, by the Manatee County Public Works Department when designed to serve property other than that owned by the developer. All major sewer collection lines provided by a

developer, together with necessary easements for access and maintenance, shall be dedicated to Manatee County.

C. All new and replacement sewerage and waste disposal systems located within the twenty-five (25) and one hundred (100) year floodplain, shall meet the requirements of Floodplain Management standards contained in this manual, the Stormwater Management Design Manual and the Land Development Code, and shall be located and designed to:

(1) Avoid impairment to the floodplain;

(2) Minimize contamination to the floodplain;

(3) Eliminate infiltration of flood waters; and prevent contamination of the aquifers.

Additionally, all new parts of the system, including buried storage tanks, must be anchored as necessary to prevent flotation, collapse, or lateral movement.

D. All industrial or commercial land uses which generate a wastewater load of a character not permitted for disposal in the County's system, pursuant to Ordinance 88-01, the property owner and facility operator shall pretreat wastewater to achieve compliance with standards required by that Ordinance. This pretreatment shall occur prior to discharge of wastewater into any public or on-site sewage system.

E. Satellite Lift Stations. All satellite lift stations shall be landscaped in accordance with the Landscape & Irrigation requirements for Pump Stations of this Manual.

1.1.3 IRRIGATION.

A. When a suitable water supply other than public potable water is available, irrigation shall be from the non-public water source. A suitable water supply, may be, but is not limited to, lakes, ponds, stormwater retention areas, and approved reuse systems. Design and use of wet stormwater facilities as sources of water for irrigation shall be required, as long as the use for irrigation does not adversely impact normal water levels in such a way that it impairs the viability of the biological treatment system. Suction lines from individual lots shall not be connected to or extend to sewer, stormwater drains, or catch basins to provide irrigation or non-potable water for any lot.

B. The Department Director may require the use of drought resistant species and may specify operational schedules and practices for irrigation for water conservation. No water service shall be furnished to any person by a public or private utility or water well unless such person agrees to accept all the provisions of the Water Shortage Plan and the Water Shortage Emergency. The acceptance of water service shall be in itself the acceptance of the above provisions. The use of reclaimed water or other alternative sources shall be required for sites located outside of the Watershed Overlay Districts and located in an area that either has the distribution system for reclaimed water or is programmed to have such system installed. Potable water shall not be used for landscape irrigation unless the cost to extend reclaimed water lines is prohibitive and there is no access to alternative sources, such as shallow wells and wet retention/detention ponds.

C. Dual distribution systems for irrigation purposes may be required on all sites within a EPA 201 service area which are identified by the Department Director as being economically feasible for the Public Works Department to provide a connection to a public re-use water system at the periphery of the development. Such systems shall be connected to the approved reuse system when available. The determination of when the dual distribution system will be required will be made at the time the applicant submits the initial development application.

D. Dual distribution systems with supplemental source or irrigation water is required, whenever a development covenant running with the land requires all lots to install irrigation systems.

E. Dual distribution systems serving residential developments shall be installed in accordance with this manual.

F. No private irrigation sprinkler line or sprinkler head shall be installed within the rights-of-way without the written approval of the Public Works Department. Sprinkler heads shall be installed so as not to distribute water onto the sidewalks and travel lanes or effect the safety of pedestrian and motorists safety.

G. All piping and outlets conveying re-use water shall be adequately and durably identified by a distinctive color coding so that it is readily distinguished from piping carrying potable water. The color coding shall comply with the American National Standards Institute ANSI Z53.1 and identified in accordance with ANSI A13.1.

1.1.4 SOLID WASTE REGULATIONS

A. Purpose and Intent. These regulations are established to provide for the safe, efficient management of solid waste, the minimization of wastes generated, the recovery of recyclable materials and the reduction of wastes disposed of, in accordance with State and County mandates and regulations.

B. Administration. The Public Works Department shall be responsible for the administration and enforcement of these regulations in conjunction with County Ordinances 85-11, 89-58, and amendments thereto; and in coordination with Federal, State and other County and regulatory agencies.

C. Construction Wastes.

(1) *Generation.* The applicant shall consider various waste management and waste minimization procedures to reduce the amount of wastes which will be generated during the construction phase of the proposed project. Waste materials are defined not only as those materials resulting directly from construction, but includes materials generated by construction crews during their occupation at the site.

(2) *Storage.* The applicant shall provide for approved temporary waste storage on the site. Any hazardous materials shall be stored and identified in appropriate containers as mandated by law and required by these Standards.

(3) *Transport.* The applicant shall remove all wastes from the site in an acceptable manner. Special wastes, including hazardous and biohazardous wastes, shall be delivered to approved processing sites for the specific waste involved.

D. Occupancy Wastes.

(1) Storage. The applicant shall make provisions for temporary on-site waste storage including the separate storage of all hazardous and biohazardous wastes in suitable containers on the site.

(2) Transport. The applicant shall make arrangements with licensed haulers to transport all waste generated to be transported to appropriate process and/or disposal sites.

E. Waste Storage Facilities.

(1) *Dumpsters and Compactors, General.* All multi-family and non-residential establishments of sufficient size shall require large containers, such as "dumpsters" and "compactors," for storing solid waste between collections. Because these large containers must be properly located and supported, the following minimum criteria shall be adhered to:

a. Support Pads. All dumpsters and compactors shall be placed on concrete pads. All dumpster pads shall be designed in accordance with detail US-14, Compactor and Dumpster Pads.

b. Siting.

i. No dumpster or compactor shall be located in the front yard of any lot. Exceptions may be made for corner lots where no reasonable alternative location is available, except that minimum district front yard setbacks shall be maintained.

ii. All dumpsters, pads and associated screening shall be setback a minimum of ten (10) feet from side and rear lot lines. Dumpster and compactor pads must be located to provide adequate maneuverability for the lift truck length of forty (40) feet and an additional forty (40) feet for backing and turning.

iii. The siting for waste storage facilities and dumpster pads shall not encroach upon a parking space, pedestrian walkway, landscaped area, fire lane, driveway entrance, public rights-of-way, visibility triangle, or easement. The turning radii for the waste hauler at the waste storage facility or dumpster pad shall not encroach upon a parking space, pedestrian walkway, landscape area, driveway entrance or rights-of-way.

iv. Businesses such as gas stations that have canopies must provide direct access to the dumpsters no closer than ten (10) feet to the canopy. All dumpsters and associated screening which consist of combustible fencing around the dumpster pad shall have a minimum separation from the nearest building or building overhang of ten (10) feet. Large commercial/industrial dumpsters, such as 20 or 40 yard containers may require a larger separation due to Building and Fire Codes. This minimum separation may be reduced or waived if the dumpster is protected by one or more fire sprinkler heads of a fire sprinkler system designed in accordance with sound engineering practices and as approved by Fire Marshall.

v. All dumpsters shall be screened from view with a minimum six (6) foot opaque fence. Screening and construction requirements for compactors and vertipack units will be addressed on a case by case basis. The contractor shall provide an accessible site that does not cause obstruction of or damage to existing County roads or rights-of-way.

(2) *Dumpsters and Compactors, Food Service.* In addition to the foregoing, businesses serving food and utilizing a dumpster or compactor must also meet the following criteria:

a. Pad Design. The dumpster or compactor pad shall be surrounded with a four (4) inch high curb to prevent spillage while cleaning. The pad shall be sufficiently elevated above grade to prevent storm water intrusion. The pad shall be sloped to a drain equipped with a grit trap with a removable bucket and connected to a grease trap which in turn is connected to the sanitary sewer system or an on-site sewage disposal system as per County requirements. The pad must be equipped with a hose bib with a back flow prevention device in accordance with the County Cross Connection and Backflow Prevention Code.

b. Aerator. Clean mist aerators shall be required at owner's expense on food service compactors if odors can be detected at the subject parcel's property line, complaints are received from neighboring residents or businesses, and as required by Manatee County Sewer Use Ordinance and State regulations.

(3) *Roll Off Containers.*

a. Placement. Roll off container on-site placement shall be determined on case-by-case basis by the Department Director.

b. Siting.The requirements of Section 1.1.4.E.(1).b (Siting) of this manual shall be adhered to except that screening requirements may be modified or waived by the Department Director.

(4) *Can Enclosure Locations***.** Enclosures are required where cans are approved for containment of solid waste generated by any single use requiring a special permit, final site plan, or off- street parking application. Can enclosures must be screened on three sides by an opaque fence a minimum of three feet high. The enclosure must be sized to contain a minimum of six (6) cans (approximately 5' x 8'). If the enclosure is not located so that one side is a building wall, a gate is required as the fourth side to ensure containment.

F. General and Specific Waste Handling. See Florida Administrative Code for additional specific requirements relative to certain types of trash removal (i.e. Beauty Salons, Doctor Offices, Veterinarian Clinics).

G. Hazardous and Biohazardous Waste. Any facility which will generate hazardous and/or biohazardous waste is obligated to handle it in compliance with the Florida Administrative Code 10D-104 and other sections of the Land Development Code. Any application for a Development Permit where the facility or operation in which any hazardous and biohazardous wastes are to be handled; the method of storage, safety features, transport and disposal shall be indicated. A contingency plan must be provided along with a site and building plan indicating the areas in which specific types and amounts of wastes will be stored. The licensed hauler of the wastes and the disposal and/or processing sites must be identified. Evidence of insurance or a bond to cover accidents involving the wastes must be provided as part of the application. This evidence must be resubmitted to and approved by the Public Works Department on a yearly basis as proof of continued coverage.

H. County Ordinance. Chapter 2-16 of the County Code of Ordinances provides for mandatory collection and disposal of solid waste within the unincorporated area of Manatee County. Disposal is currently (1991), and for the foreseeable future, at the County-owned Lena Road Solid Waste Management Facility. Inasmuch as this ordinance, including definitions, affects the design, construction and use of any development, building or structure, it shall be considered part of this manual and Land Development Code.

I. Enforcement. The Public Works Department is responsible for the enforcement of this Section and shall investigate violations of this Section and shall process confirmed violations in accordance with the violations section of theLand Development Code or as otherwise allowed by law.

SECTION 1.2 MODIFICATIONS TO EXISTING STRUCTURES, PIPING AND EQUIPMENT

1.2.1 DESCRIPTION OF WORK

Modification or conversion of existing structures as required by the construction drawings. Existing piping and equipment removal, dismantling, and disposal, as required.

1.2.2 PRODUCTS

A. Epoxy mortar shall be fiberglass fiber mixed with an epoxy filler.

B. Non-shrink grout shall be a sand-cement, non-metallic formulation, having a 28-day strength of 4,000 psi and 0.0 percent shrinkage per ASTM C1090.

C. Liners to be installed in existing manholes and wetwells shall be spray-applied, monolithic, reinforced urethane resin. Urethane resin-based manhole liner material shall be resistant to hydrogen sulfide gas, and other common contents found in a sanitary sewer environment.

D. Approved manhole and wet well liner products are SprayWall, Raven 405, Green Monster, SpectraShield, Polyurethane Lining System by Protective Liner Systems, and Sauereisen.

1.2.3 GENERAL MODIFICATION WORK

A. Cut, repair, reuse, excavate, demolish or otherwise remove parts of the existing structures or appurtenances, as indicated on the construction drawings, or as necessary to complete the work as required. Dispose of surplus materials resulting from the above work in an approved manner. The work shall include all necessary cutting and bending of reinforcing steel, structural steel, or miscellaneous metal work found embedded in the existing structures.

B. Dismantle and remove all existing equipment, piping, and other appurtenances required for the completion of the work. Where called for or required, cut existing pipelines for the purpose of making connections thereto.

C. Anchor bolts for equipment and structural steel to be removed shall be cut off one inch below the concrete surface. Surfaces shall then be refinished using non-shrink grout or epoxy mortar or as indicated on the construction drawings. Repairs to the interior surfaces of existing concrete structures in sanitary sewers shall be made with epoxy mortar. Repairs to be made on other existing concrete surfaces using non-shrink grout shall be made using a bonding agent such as Acrylbond by Concrete Producers Solutions or an equal approved by the County. Remove all dirt, curing compounds, sealers, paint, rust or other foreign material, and etch with muriatic acid solution. Flush with clean water and while still damp, apply a coating of the bonding agent. Place the new grout patch onto the treated area immediately.

D. At the time that a new connection is made to an existing pipeline, additional new piping, extending to and including a new valve, shall be installed. Pipe restraint devices, if required, shall also be installed as required. At the time when a new potable or reclaimed water service is installed, a pipe locator tracer wire shall be installed and connected to the tracer wire at the main.

E. No existing structure, equipment, or appurtenance shall be shifted, cut, removed, or otherwise altered except with the express approval of and only to the extent approved by the County. All existing valve boxes, fire hydrants, air release valve cabinets, and manholes shall be relocated to meet the new finished grade elevations after construction.

F. When removing materials or portions of existing utility pipelines or structures or when making openings in walls and partitions, take all precautions and use all necessary barriers and other protective devices so

as not to damage the structures beyond the limits necessary for the new work, and not to damage the structures or contents by falling or flying debris. Unless otherwise approved by the County, saw-cutting, rotary core-boring, or line drilling will be required in removing material from existing concrete structures or pipes.

G. Materials and equipment removed in the course of making alterations and additions shall remain the property of the County, except that items not salvageable, as determined by the County, shall be disposed of off the work site.

H. All alterations to existing utility pipes and structures shall be done at such time and in such a manner as to comply with the approved time schedule. Before any part of the work is started, all tools, equipment, and materials shall be assembled and made ready so that the work can be completed without delays.

I. All cutting of existing concrete or other material to provide suitable bonding to new work shall be done in a manner to meet the requirements of the respective section of these Standards covering the new work. When not covered, the work shall be carried on in the manner and to the extent directed by the County or per the construction drawings.

J. Surfaces of seals visible in the completed work shall be made to match as nearly as possible the adjacent surfaces.

K. Non-shrink cementatious grout shall be used for setting wall castings, sleeves, leveling pump bases, doweling anchors into existing concrete and elsewhere as shown on the construction drawings. The surface to which grout is to be applied shall be wetted to facilitate good bonding.

L. Where necessary or required for the purpose of making connections; cut existing pipelines in a manner to provide an approved joint. Where required, use flanges, couplings, or adapters, all as required.

M. Provide flumes, hoses, piping, pumps and well points, and other related items to divert or provide suitable plugs, bulkheads, or other means to hold back the flow of water or other liquids, all as required in the performance of the work.

N. Care shall be taken not to damage any part of existing buildings or foundations or outside structures.

O. Prior to entering confined spaces in sanitary sewer structures, conduct an evaluation of the atmosphere within, in accordance with local, state, and federal regulations. Provide ventilation equipment and other equipment as required to assure safe working conditions.

1.2.4 CONNECTING TO EXISTING PIPING AND EQUIPMENT

Verify exact location, material, alignment, joint, etc. of existing piping and equipment prior to making the connections called out in the construction drawings. The verifications shall be performed with adequate time to correct any potential alignment or other problems prior to the actual time of connection. The County Inspector must be present for all tie-ins for a visual inspection.

1.2.5 REMOVAL AND ABANDONMENT OF ASBESTOS CEMENT PIPE AND APPURTENANCES

A. All work associated with the removal or abandonment of existing asbestos cement pipe and appurtenances shall be performed by a licensed asbestos removal Contractor registered in the State of Florida.

B. The asbestos Contractor shall contact the appropriate regulatory agencies prior to removal or abandonment of any asbestos material and shall obtain all required permits and licenses and issue all

required notices. The cost for all fees associated with permits, licenses and notices to the governing regulatory agencies shall be borne by the asbestos Contractor.

C. All work associated with removal or abandonment of asbestos cement pipe and appurtenances shall be performed in accordance with the standards listed below and all other applicable local, State, or Federal standards.

(1) Florida Administrative Code, Chapter 62-257, ASBESTOS PROGRAM

(2) Title 40 CFR, Part 61, Subpart M, NATIONAL EMISSION STANDARD FOR ASBESTOS

(3) Occupational Safety and Health Act, Title 29 CFR

(4) Title 40 CFR, Part 763, ASBESTOS

(5) Florida Statute Title XXXII, Chapter 469, ASBESTOS ABATEMENT

D. All asbestos cement pipe sections indicated on the construction drawings to be removed, and all related valves, fittings and appurtenances shall be removed in their entirety and disposed of by the asbestos Contractor in accordance with this Section. After removal of the pipelines, all excavations shall be backfilled in accordance with the applicable provisions of the Trenching and Excavation Section of these Standards. The cost of disposing of the removed materials shall be borne by the asbestos Contractor.

E. The cutting of existing asbestos-cement (A/C, a.k.a. "Transite") pipe shall be by hand tools only. No powered machine cutting is allowed. Removal of all fragments of pipe shall be double bagged prior to shipment. Longer sections of pipe removed may be shipped without double bagging. An asbestos manifest form must accompany each shipment of such pipe or pipe material waste to the Manatee County Lena Road Landfill. Prior to each shipment, a minimum of 24 hours notice to the Landfill field office (telephone (941) 748-5543) is required.

1.2.6 IN-PLACE GROUTING OF EXISTING PIPE

A. Where water and wastewater utility pipes are to be abandoned in place, they shall be filled with a non-shrinking sand-cement grout. When such pipes are made of asbestos-cement materials, the abandonment activities shall be performed by a licensed asbestos Contractor. It is completely the Contractor's responsibility to obtain all regulatory clearances and provide documentation in cases where they have determined that an asbestos-cement pipe abandonment activity by in-place grouting does not require a licensed asbestos Contractor.

B. The ends of the pipe sections to be grout-filled shall be capped or plugged with suitable pipe fittings. The grout material shall be of suitable properties and the pumping pressure shall be such that the pipe sections are filled completely with grout. All above ground features shall be removed: hydrants, meters, valve & meter boxes, pads, vaults, etc.

C. The County shall be given timely notice so that the County's representative may be present to monitor all pipe grouting operations. Provide standpipes and/or additional means of visual inspection as required to determine if adequate grout material has filled the entire pipe sections.

1.2.7 SPRAY-APPLIED MANHOLE LINERS

A. Use a high-pressure water spray to remove all foreign material from the walls and bench of the manhole. Loose or protruding masonry materials shall be removed using a hammer and chisel. Fill any voids, holes or cracks with epoxy mortar to form a uniform surface. Place covers over all pipe openings to prevent

extraneous material from entering the pipes. Block or divert sewer flow from entering the manhole. Any infiltration leaks shall be stopped by using such methods as approved by the County.

B. The liner material shall be sprayed onto the invert, bench and wall areas. The sprayed-on material shall be applied such that the entire manhole is lined with a structurally enhanced monolithic liner. The thickness of the wall liner material shall be such that it will withstand the hydraulic load generated by the surrounding groundwater table, using a factor of safety of two, and using the assumption that the groundwater table is at the level of the top of the structure. The invert and bench liner material shall be the same thickness as that required for the base of the wall.

C. Special care shall be used to provide a smooth transition between the intersecting pipelines and the manhole inverts such that flow is not impaired. Remove concrete material from the existing manhole base channel in depth to the required thickness of the new liner material.

D. No active sewer flow shall be allowed in the newly lined manhole, nor shall any vacuum tests be performed, until the liner material has had adequate time to cure, as recommended by the liner material manufacturer.

E. Install the coating systems per manufacturer's recommendation and completely protect the structure from corrosion. The liner or coating systems must extend and seal onto manhole ring, onto and around pipe openings and any other protrusions, and completely cover the bench and flow invert. Provide a five (5)-year unlimited warranty on all workmanship and products. The work includes the surface preparation and application of the coating or liner system, and shall protect the structure for at least five (5) years from all leaks and from failure due to corrosion from exposure to corrosive gases such as hydrogen sulfide.

1.2.8 CONNECTION TO EXISTING MANHOLES

A. Where required or as indicated on the construction drawings, make connection of new pipelines to existing manhole structures. If pipe stub-outs of the correct size and position are not available, make connections by removing a portion of the manhole wall by mechanical rotary core boring. The connection between pipe and concrete manhole shall be complete with resilient seals meeting the requirements of ASTM C923.

B. A new channel shall be formed in the manhole base by removing and reforming or by providing new concrete to convey the new flow into the existing channel in accordance with the standard requirements for new sewer manhole structures. Flow direction shall not change by more than 90 degrees within the manhole base.

C. Repair internal coating of existing manholes cored during connection of new sewers by applying approved coating material as listed above in accordance with the manufacturer's recommendations. If existing manhole has an internal coating other than that listed above, sandblast the interior of the existing manhole and apply an approved coating in accordance with the manufacturer's recommendations.

END OF SECTION

SECTION 1.3 TRENCHING AND EXCAVATION

1.3.1 DESCRIPTION OF WORK

Excavate for utility pipelines, valves and fittings, manholes, utility vaults and pump stations. Dewater underground soils to elevations as required to allow the installation of pipe lines, beddings, foundations and structures. Store excavated soil materials that are suitable for use as backfill. Dispose of excavated soil materials that are either unsuitable for use as backfill or will not be required for fill on the project site. Import suitable soil materials or granular rock materials as required to provide suitable backfill, bedding or foundation materials. Place and compact bedding and foundation materials and install utility structures. Place and compact backfill materials to finished grades. Provide other materials and labor as required to complete the utility work as indicated on the construction drawings.

1.3.2 CLEARING AND GRUBBING

Clear and grub the areas within rights-of-way and utility easements where utility structures will be installed. Completely remove and dispose of all buildings, foundations, materials, rubbish, debris, trees, brush, stumps, roots, or any other obstructions on or buried near the surface of the ground. Remove roots and other obstructions to a depth of at least 12 inches below the surface.

1.3.3 DEWATERING

A. The construction of pipelines, structures, foundations, beddings, and the placement of backfill materials shall be in dry or dewatered subsurface soil conditions. Where the existing groundwater piezometric elevation is higher than 18 inches below the bottom of the proposed excavation, use well points, wells, pumps and other approved methods to lower the groundwater level to 18 inches below the elevation of the proposed excavation bottom. Excavation for pipelines and structures shall not proceed unless or until the existing groundwater levels have been lowered to at least 18 inches below the intended lowest elevation of the digging operation.

B. Dewatering operations shall continue while the pit is open and while structure placement and construction is taking place and while backfilling and compaction is accomplished. At all times during the construction operations, the groundwater levels shall be maintained at an elevation 18 inches below the lowest level where structures are being installed.

C. Divert surface water flows as necessary to prevent surface water from entering the open excavations.

D. Discharged flows from dewatering operations shall be disposed of in a manner consistent with US EPA, FDEP, and SWFWMD regulations.

1.3.4 PROTECTION OF EXISTING STRUCTURES

A. Where excavations are made and underground utility structures are constructed in close proximity to existing structures, take all reasonable precautions and measures to prevent damage to such structures. Existing building foundations and existing utility structures shall be monitored during the construction operations and any movement of these structures shall be reported to the County's authorized representative. When any movement of existing structures has been detected, immediately take any and all remedial measures required to effect the protection and prevent damage to the structures.

B. Existing structure protection measures shall include, but shall not be limited to the installation of sheet piling, or other shoring methods or materials as needed, maintenance of the groundwater piezometric elevation, and control of the vibrations from construction operations. Where existing utility pipelines or

structures are situated vertically above a line from the base of the excavation pit or trench along an angle of repose of the soil, or where an existing utility crosses a trench transversely, take reasonable measures to protect and support these structures during the construction operations.

1.3.5 EXCAVATION

A. Excavate trenches and pits for structures to the elevations indicated on the construction drawings. Take special care to avoid over-excavating or disturbing the bottom of the trench or pit, so that the soil at the bottom of the hole remains in a naturally compacted condition. Excavate to widths sufficient to provide adequate working room to install the required structures. Do not excavate the final layer of soil to the designed grade until just before placing the bedding, foundation, pipe, structure, or masonry work required. Remove boulders, rocks, logs or any unforeseen obstacles encountered.

B. In case the foundation soil found at the bottom of the trench or pit is soft, plastic or mucky, or does not conform to the soils classification specified as suitable foundation material, over-excavation to a greater depth will be required. Soils not meeting the classification required for foundation material shall be removed to a depth at least four inches below the bottom of the pipe, bedding or structure bottom elevation. Rock, boulders or other hard or lumpy material shall be removed to a depth 12 inches below the bottom of the pipe, bedding or structure bottom elevation. Remove muck, clay or other soft material to a depth as needed to establish a firm foundation.

C. Where possible, the sides of trenches should be vertical up to at least the spring line of the installed pipe.

D. Trench excavation shall be performed in accordance with Florida Statute Title XXXIII, Chapter 553, Part III, Trench Safety Act.

1.3.6 BACKFILL MATERIALS

A. Bedding - shall conform to FDOT Standard Specifications for Road and Bridge Construction, Section 901 Coarse Aggregate, and shall be either coarse aggregate of Size No. 57 or coarse sand of Size No. 9. Washed shell size No.57 may be used as an alternate bedding material.

B. Structural Fill - shall be either soil classification A-1, A-2 or A-3, per AASHTO M-145, and shall be free of organic matter, lumps of clay or marl, muck, compressible materials, and rock exceeding 2.5 inches in diameter. Broken concrete, masonry, rubble or other similar materials shall not be used as backfill.

C. Selected Common Fill - shall have the same material classification and requirements as Structural Fill, as per Paragraph 1.3.6.B, above.

D. Common Fill - shall be either soil classification A-1, A-2, A-3, A-4, A-5 or A-6, per AASHTO M-145, and shall be free of organic matter, lumps of clay or marl, muck, compressible materials and rock exceeding 2.5 inches in diameter. Broken concrete, masonry, rubble or other similar materials shall not be used as backfill.

E. Unsuitable Material - soil classification A-7 and A-8, per AASHTO M-145, shall not be used as backfill material.

1.3.7 BACKFILL

A. Backfill materials shall be placed on solid, firm, naturally compacted or compacted, dry or dewatered in-place soil foundations.

B. Where over-excavation is required due to nonconforming soil classification or rocky, unstable, or otherwise undesirable soil conditions, place Structural Fill or Selected Common Fill in the over-excavated

zone up to the base of the bedding material layer. Compact the over-excavated zone to a density approximately the same as the natural material into which the trench or pit was cut.

C. When backfilling in an over-excavated zone where moist or watery conditions exist, backfill shall be coarse No. 9 sand or a mixture of No. 57 coarse aggregate with either No. 9 coarse sand, A-1, or A-3 material.

D. After compaction, backfill material in the over-excavation zone shall form a solid and firm foundation on which to build up successive layers of backfill and structures.

E. Bedding materials shall be placed on solid, firm soil foundations and shall be compacted to a density approximately the same as the natural material into which the trench or pit was cut.

F. Concrete and masonry structures shall be backfilled using Structural Fill. Backfilling and compaction shall be carried up evenly on all walls of an individual structure simultaneously. The maximum allowable difference in backfill elevations shall be two feet. No backfilling shall be allowed against concrete or masonry walls until the walls and their supporting slabs have been in place at least seven days or until the specified 28-day strength has been attained. Compaction of Structural Fill shall be 98 percent of the maximum dry density of the material as determined by AASHTO T-180. The Structural Fill shall be either dried or shall have water added so that the moisture content of the material is within a range that will allow the required density to be achieved.

G. Trenching backfill for pipe installation shall be Selected Common Fill for the pipe bedding zone. The pipe bedding envelope shall begin at the level four inches, six inches, or nine inches, depending on pipe diameter, below the bottom of the pipe, and shall extend vertically up to a level 12 inches above the top of the pipe. Where the in-place soil material within the four inch, six inch, or nine inch pipe bedding zone beneath the bottom of the pipe meets the soil classification for Selected Common Fill, undercutting of the trench below the bottom of the pipe will not be required. In this case, loosen the soil in the bottom of the trench immediately below the middle third of the pipe diameter, and place the pipe upon it. Where the in-place soil material within the pipe bedding zone does not meet the soil classification for Selected Common Fill, undercutting shall be required, and the bedding zone shall be backfilled with Selected Common Fill. In this case, place the pipe bedding material and leave it in a moderately firm uncompacted condition under the middle third of the pipe diameter, and compact the outer portions of the trench bottom to 98 percent of the maximum dry density. Soils that were over-excavated due to rocky, soft or otherwise unsuitable soil foundation conditions shall also be replaced with Selected Common Fill. Compaction of Selected Common Fill shall be 98 percent of the maximum dry density as determined by AASHTO T-180. Such backfill material shall have an optimized moisture content that will allow the required density to be achieved.

H. Pipe sections for gravity flow systems shall be laid with spigots downstream and bells upstream. Excavate for pipe bells before laying pipe. Lay pipe true to the lines and grades indicated on the construction plans. Place backfill material on both sides of the pipe and compact. Take special care to effect the filling and compaction of material in the haunch areas under the sides of the pipe.

I. For pipes that are not installed under roadways or driveways, trenching backfill for pipe installation shall be Common Fill above the pipe envelope zone, and shall be compacted to 90 percent of the maximum dry density of the material as determined by AASHTO T-180, and shall have moisture content optimized to allow the required density. For pipes that are installed under roadways or driveways, trenching backfill for pipe installation shall be Selected Common Fill above the pipe envelope zone, and shall be compacted to 98 percent of the maximum dry density of the material as determined by AASHTO T-180, and shall have moisture content optimized to allow the required density. Selected Common Backfill shall be placed in layers not to exceed 6 inches. Common Backfill shall be placed in layers not to exceed 12 inches.

J. Backfill compaction tests shall be performed every 500 feet in pipe line trenches and for every utility structure. Test reports shall be presented to the County Inspector.

1.3.8 GRADING AND CLEANING UP

A. Surplus and unsuitable soil materials not used on-site shall be removed and disposed of off-site in a manner that is consistent with state and local regulations. In no case shall surplus or unsuitable material be deposited on-site or on adjacent lands.

B. The surface of backfilled areas shall be graded smooth and true to the lines and grades indicated on the construction plans. No soft spots or uncompacted areas shall be allowed in the work.

C. Upon completion of the work, leave the work areas and all adjacent areas in a neat and presentable condition, clear of all temporary structures, rubbish and surplus materials. Pile any salvageable materials that have been removed in neat piles for pickup by County crews, unless otherwise directed.

END OF SECTION

SECTION 1.4 DUCTILE IRON PIPE AND FITTINGS

1.4.1 DESCRIPTION OF WORK

A. Furnish all labor, materials, equipment and incidentals required to install ductile iron pipe, restrained joint ductile iron pipe and cast iron or ductile iron fittings, complete, as indicated on the construction drawings.

B. Provide and install complete all fittings and appurtenances not noted specifically on the construction plans as required to complete the utility system in accordance with these Standards.

1.4.2 PRODUCTS

A. Ductile iron pipe shall conform to AWWA C150 and AWWA C151. Pipe shall be Pressure Class 350. All ductile iron pipe used in above ground applications shall be Special Thickness Class 53. All pipe materials used in potable water systems shall comply with NSF Standard 61.

B. Unrestrained joint pipe shall be supplied in lengths not to exceed 21 ft. and shall be either the rubber-ring compression-type push-on joint or standard mechanical joint pipe as manufactured by the American Cast Iron Pipe Company, U.S. Pipe and Foundry Company, or an approved equal.

C. All mechanical joint fittings shall be pressure rated for 350 psi for sizes 4-24 inches and 250 psi for sizes 30 inches and larger. All flanged fittings shall be pressure rated for 250 psi for all sizes. All fittings shall meet the requirements of AWWA C110 or AWWA C153.

D. Rubber gaskets shall conform to AWWA C111 for mechanical and push-on type joints and shall be Ethylene Propylene Diene Monomer (EPDM) rubber for potable water and reclaimed water pipelines. Standard gaskets shall be such as Fastite as manufactured by American Cast Iron Pipe Company, or an approved equal. Acrylonitrile butadiene (NBR) gaskets shall be used for potable water mains that are located in soil that is contaminated with low molecular-weight petroleum products or non-chlorinated organic solvents or non-aromatic organic solvents. Fluorocarbon (FKM) gaskets shall be used for potable water mains that are located in soil that is contaminated with aromatic hydrocarbons or chlorinated hydrocarbons. Fluorocarbon (FKM) gaskets shall be used where both classes of contaminates are found.

E. Water Main and Reclaimed Water Main Coatings: All ductile iron pipe used in water and reclaimed water systems shall have a standard thickness cement lining on the inside in accordance with AWWA C104 and a standard 1-mil asphaltic exterior coating per AWWA C151. All ductile iron or gray iron fittings used in water and reclaimed water systems shall have standard thickness cement linings on the inside per AWWA C104 and an asphaltic exterior coating or they shall have factory-applied fusion bonded epoxy coatings both inside and outside in accordance with AWWA C550.

F. Wastewater Main Coatings: All ductile iron pipe and fittings used in wastewater sewer systems shall have a factory applied dry film thickness 40-mil Protecto 401 or 40-mil Novocoat SP2000W amine cured novalac ceramic epoxy lining on the inside. The interior lining application is to be based on the manufacturer's recommendation for long-term exposure to raw sewage. To ensure a holiday-free lining, documentation must be provided, prior to shipment, showing each section of lined pipe has passed holiday testing at the time of production per ASTM G62. The lining shall have a minimum ten year warranty covering failure of the lining and bond failure between liner and pipe.

   Exterior coatings for ductile iron pipe and fittings used in wastewater systems shall be either an asphaltic coating per AWWA C151 or a factory-applied epoxy coating per AWWA C550.

G. Thrust restraint devices shall be provided at all horizontal and vertical bends and fittings, in casings under roads and railroads and at other locations specifically indicated on the construction drawings. Thrust

restraint devices shall be either concrete thrust blocks or restraining glands as manufactured by Star Pipe Products, Stargrip 3000 and 3100, Allgrip 3600, or as manufactured by EBAA Iron Sales, Megaflange, 2000 PV, or other approved equal restraining gland products. Restrained joints, where used, shall be installed at bend and fitting locations and at pipe joint locations both upstream and downstream from the bends or fittings at distances as required by these Standards. Restrained joint pipe fittings shall be designed and rated for the following pressures:

350 psi for pipe sizes up to and including 24" diameter

250 psi for pipe sizes 30" diameter and above

1.4.3 DETECTION

A. Pipe shall have a 3-inch wide warning tape of the proper color placed directly above the pipe 12 inches below finished grade or a 6-inch warning tape between 12 inches and 24 inches below finished grade.

B. Pipe shall have a No. 10 gauge solid, insulated wire of proper color installed along the pipe alignment as detailed in these standards.

1.4.4 IDENTIFICATION

A. Each length of pipe and each fitting shall be marked with the name of the manufacturer, size and class, lining type, and shall be clearly identified as ductile iron pipe. All gaskets shall be marked with the name of the manufacturer, size and proper insertion direction.

B. Pipe shall be polyethylene-wrapped blue for water mains, purple (Pantone 522 C) for reclaimed water mains and green for sewer mains, per AWWA C105. Pipe need not be entirely polyethylene wrapped if soil testing, which is performed by the Engineer of Record or the Contractor in accordance with AWWA C105, indicates that the soil at the site is not corrosive. If soil testing indicates that the soil at the site is not corrosive, pipe may be spiral wrapped with color coded polyethylene at a six-inch minimum spacing, or the ductile iron pipe (DIP) may be painted with a minimum 1-inch wide color coded stripe on the top and both sides of the DIP.

END OF SECTION

SECTION 1.5 POLYETHYLENE (HDPE) PIPE AND FITTINGS

1.5.1 DESCRIPTION OF WORK

Furnish all labor, materials, equipment and incidentals required to install high density polyethylene (HDPE) pressure pipe, tubing, fittings and appurtenances as indicated on the construction drawings.

1.5.2 PRODUCTS

A. Polyethylene pipe 4" diameter and larger shall be high-density bimodal PE3408/PE 100/PE4710 polyethylene resin with a minimum cell classification of 445574 per ASTM D3350, Class 160, DR 11, Performance Pipe DriscoPlex 4000, or an approved equal, meeting the requirements of AWWA C906. All pipe materials used in potable water systems shall comply with NSF Standard 61. Outside diameters of water, reclaimed water and pressure sewer HDPE pipes shall be ductile-iron sizing system (DIPS).

B. Polyethylene tubing 2 inches in diameter and smaller for potable water and reclaimed water shall be high-density PE 3408 polyethylene resin per ASTM D2737, Pressure Class 200, Copper Tube Size (CTS), SDR 9, Performance Pipe DriscoPlex 5100, Endot EndoPure, Charter Plastics or an approved equal, meeting the requirements of AWWA C901. Butt fusion or CTS brass connections shall be used. All pipe materials used in potable water systems shall comply with NSF Standard 61.

C. Polyethylene pipe 3 inches in diameter (for potable water and reclaimed water), and 3 inches in diameter and smaller (for wastewater force mains) shall be high-density PE 3408 polyethylene, per ASTM D2737, Pressure Class 160, iron pipe size (IPS) outside diameter, DR 11, Performance Pipe DriscoPlex 4100 or an approved equal, meeting the requirements of ASTM D 3035 and AWWA C901.

1.5.3 JOINTS

A. Where PE pipe is joined to PE pipe, it shall be by thermal butt fusion. Thermal fusion shall be accomplished in accordance with the written instructions of the pipe manufacturer and fusion equipment supplier. The installer of the thermal butt fused PE pipe shall have received training in heat fusion pipe joining methods and shall have had experience in performing this type of work.

B. Flanged joints, mechanical joints and molded fittings for 4” and larger pipe shall be in accordance with AWWA C906. Mechanical joints and fittings for 3” and smaller pipe & tubing shall meet the requirements of: AWWA C901, ASTM D 3350 and ASTM D 3140.

1.5.4 DETECTION

A. Direct buried HDPE pipe shall have 3" warning tape of the proper color placed directly above the pipe and 12" below finished grade or 6" warning tape between 12" and 24" below finished grade.

B. Direct buried or horizontal directional drilled HDPE pipe shall also have a No. 10 gauge solid, insulated wire of proper color installed along the pipe alignment as detailed in these Standards.

1.5.5 IDENTIFICATION

A. Pipe and tubing shall bear identification markings in accordance with AWWA C906 or C901.

B. Pipe shall be color coded blue for water, purple (Pantone purple 522 C) for reclaimed water or green for pressure sewer using a solid pipe color or embedded colored stripes. Where stripes are used, there shall be a minimum of three stripes equally spaced.

END OF SECTION

SECTION 1.6 POLYVINYL CHLORIDE (PVC) PRESSURE PIPE

1.6.1 DESCRIPTION OF WORK

A. Furnish all labor, materials, equipment and incidentals required to install the PVC piping, iron fittings and other appurtenances complete and ready for use as indicated on the construction drawings.

B. Provide and install complete all fittings and appurtenances not noted specifically on the construction plans as required to complete the utility system in accordance with these Standards.

1.6.2 PRODUCTS

A. Polyvinyl chloride (PVC) pressure pipe, 4 - 12 inches in diameter, shall be Class 235, DR 18, meeting the requirements of AWWA C900 and shall have cast-iron-pipe-equivalent outside diameters (also known as ductile iron pipe size (DIPS)). Each length of pipe shall be hydrostatically tested to four times its pressure class of the pipe by the manufacturer in accordance with AWWA C900.

B. Polyvinyl chloride (PVC) pressure pipe, 14 inches in diameter, shall be ductile iron pipe size (DIPS) outside diameter and shall meet the requirements of AWWA C905. Pipe used in water and reclaimed water service shall be DR 18 and Pressure Class 235. Pipe used in sewer force mains shall be DR 21 and Pressure Class 200. Each length of pipe shall be hydrostatically tested at twice its pressure class in accordance with AWWA C905. Pipe shall be furnished in standard lengths of approximately 20 feet.

C. Polyvinyl chloride (PVC) pressure pipe, 2-3 inches in diameter, shall be Pressure Rated 200, SDR21, conforming to ASTMD2241, and shall have Iron Pipe Size (IPS) outside diameters. SDR 21 PVC pipe 2-3 inches in diameter shall not be used for working pressures greater than 125 psi. PVC pipe shall not be used in applications which require pipes that are less than 2 inches in diameter for wastewater force mains. PVC Pipe shall not be used in applications which require pipes that are less than 3 inches in diameter for potable water piping and reclaimed water piping.

D. Standard PVC pressure pipe joints shall be bell and spigot push-on type with elastomeric ring seals. Ring seal gaskets used at push-on joints shall conform to ASTM F 477 and shall be EPDM rubber for potable and reclaimed water pipes.

E. Lubricant furnished for lubricating the push-on joints in potable water pipes shall be nontoxic, water soluble, shall not support the growth of bacteria, shall have no deteriorating effects on the gasket or pipe material, and shall not impart color, taste, or odor to the water, and shall be an approved substance per NSF 61.

F. Thrust restraint devices shall be provided at all horizontal and vertical bends and fittings, in casings under roads and railroads and at other locations as indicated on the construction drawings. Thrust restraint devices for PVC pipe and fittings shall be either concrete thrust blocks or restraining glands as manufactured by Star Pipe Products, Stargrip 3000 and 3100, Allgrip 3600, or as manufactured by EBAA Iron Sales, Megaflange, 2000PV or other approved equal restraining gland products. Restrained joints, where used, shall be installed at bend and fitting locations and at pipe joint locations both upstream and downstream from bends or fittings at distances as required by these Standards.

G. All fittings for PVC pipe shall be ductile iron or gray iron with mechanical joints and shall conform to AWWA C110 or AWWA C153 and to the applicable sections of these Standards for ductile iron and gray iron fittings.

H. All pipe materials used in potable water systems shall comply with NSF Standard 61.

1.6.3 DETECTION

A. Direct buried pipe shall have 3" warning tape of the proper color placed directly above the pipe 12" below finished grade or 6" warning tape between 12" and 24" below grade.

B. PVC pipe shall have a No. 10 gauge solid, insulated wire of proper color installed along the pipe alignment as detailed in these Standards.

1.6.4 IDENTIFICATION

A. PVC pipe shall bear identification markings in accordance with AWWA C900, AWWA C905 or ASTM D2241.

B. PVC pipe shall be color coded blue for water, purple (Pantone purple 522C) for reclaimed water or green for pressure sewer using a solid pipe color pigment.

END OF SECTION

SECTION 1.7 POLYVINYL CHLORIDE (PVC) GRAVITY SEWER PIPE

1.7.1 DESCRIPTION OF WORK

Furnish all labor, equipment, materials, testing and incidentals required to install the gravity sewers, complete, as indicated on the construction drawings.

1.7.2 PRODUCTS

A. Polyvinyl chloride (PVC) gravity sewer pipe and fittings, 4-15 inches in diameter, shall be SDR 26, meeting the requirements of ASTM D 3034. Joining of pipe sections and fittings shall be by water-tight push-on joints using elastomeric gaskets in accordance with ASTM D 3212.

B. Polyvinyl chloride (PVC) pipe, 16-48 inches in diameter, for gravity sewers, shall be DR 25, with cast-iron (CI) outside diameter, meeting the requirements of AWWA C905.

C. All PVC sewer pipe bell ends shall be field inspected for out-of-roundness and spigot ends shall be field inspected for out-of-roundness and for squareness of the pipe end. Any materials not in conformance with the tolerances of ASTM D 3212 or AWWA C905 shall be removed from the work site.

D. All PVC sewer pipe sections shall also be field inspected for excessive cross-section deflection. Any pipe section visually found to have a pipe deflection, before installation, of 2 percent of the Base Inside Diameter or greater shall be removed from the work site. After installation and backfill, pipe deflection shall not be allowed to be 5 percent or greater of the Base Inside Diameter. Any length of pipe found installed having excessive deflection shall be dug up and either reinstalled or removed from the work site.

E. Six inch PVC fittings for sewer laterals shall also be SDR 26, molded in one piece, with elastomeric joints in accordance with ASTM D-3034. Fittings not currently available in molded form may be fabricated in accordance with ASTM D-3034 with manufacturer's standard pipe bells and gaskets.

1.7.3 JOINING PVC GRAVITY SEWER PIPE AND FITTINGS

A. The PVC joints shall be of the push-on type with a single rubber gasket conforming to ASTM F 477.

B. Wyes and riser fittings shall be gasketed connections. Rubber doughnuts are not to be used.

C. Joints between pipes of different materials shall be made using flanged connections. Metal piping shall not be threaded into plastic fittings, valves, or couplings, nor shall plastic piping be threaded into metal valves, fittings, or couplings.

1.7.4 IDENTIFICATION AND DETECTION

A. PVC gravity sewer pipe shall bear identification markings in accordance with ASTM D 3034 or AWWA C905.

B. PVC gravity sewer pipe shall be color coded green using a solid pipe color pigment.

END OF SECTION

SECTION 1.8 TESTING AND INSPECTIONS

1.8.1 DESCRIPTION OF WORK

Timely notice shall be given to the County Inspector of approvals or observations which may be required, and a time and date for a field visit shall be scheduled. Provide all materials, equipment, supplies and labor as required to complete the testing or inspection operations. Should any test fail, the causes of failure shall be corrected, and the work shall be retested until all test requirements have been successfully met.

1.8.2 FIELD VISITS

Field tests or observations which require the presence of a County Inspector shall be scheduled on week days during normal working hours. A minimum of two full days' notice, not counting weekends, shall be provided to the inspector in advance of when the test is to be conducted. Any requests for emergency test scheduling must be made in writing, stating why the test should be scheduled ahead of tests for other jobs.

1.8.3 PIPELINE INSPECTIONS

A. During the County Inspector's routine inspections of construction, the County Inspector shall observe that the pipe interior, fittings, valves and other appurtenances are thoroughly cleaned of all dirt, debris and obstructions before being lowered into the trenches; and that the interior of all pipelines are kept clean during and after installation; and that all open pipe ends are securely plugged or capped water-tight when construction stops during the day, or during lunch, or overnight or during long periods of inactivity.

B. All thrust restraint devices on pressure pipelines shall be checked and approved by the County Inspector before backfilling.

C. The County Inspector shall be present during the flushing and pigging operations and verify that final discharges are clear and free of debris.

1.8.4 COMPACTION TESTING

A. Granular earth backfill materials shall be tested for percentage of compaction every 500 feet in pipeline trenches and for every fifth excavation for structures.

B. Backfill compaction testing shall be done in accordance with AASHTO T-180, the Modified Proctor Method, unless otherwise approved by the County.

1.8.5 MATERIALS CLASSIFICATION

Soils and soil-aggregate mixtures used as backfill materials shall be identified according to the AASHTO system, designation M-145.

1.8.6 FLOW TESTS

Measurements of static, pitot, and residual pressures and available fire flow, for use in the design of water distribution systems, shall be made using the two-hydrant method (or additional hydrants as required) as described in AWWA Publication M17, "Installation, Field Testing, and Maintenance of Fire Hydrants".

1.8.7 HYDROSTATIC TESTING OF PRESSURE PIPELINES

A. After the water mains, reclaimed water mains or sewer force mains are installed complete, and the fire hydrants, valves, fittings, blow-offs and restraining devices are permanently installed, and the trenches are backfilled, the new pipelines shall be tested hydrostatically for leakage.

B. The County Inspector shall have been notified and shall be present during hydrostatic testing procedures. The Contractor and an Engineer of Record representative shall also be present during the tests.

C. All excavations for any utility pipes or cables within the rights-of-way or easements must be complete before a hydrostatic test is performed. Any subsequent digging or boring across the water, sewer or reclaimed pipelines after they have been tested shall result in a requirement for the pipelines to be retested.

D. All mains to be tested shall be cleaned as specified in these Standards to remove all dirt, stones, pieces of wood or any other material which may have entered the lines during construction. Any obstructions remaining shall be removed.

E. Pipelines to be tested shall have been allowed to remain in place undisturbed for at least 24 hours to allow time for all joints to develop a complete seal. All potable water services and reclaimed water services are to be installed complete with curb stops, resetters and meter boxes prior to beginning the test. Gate valves on fire hydrant laterals shall be opened so that the test pressure bears against the closed hydrant valve.

F. Discharged flows from cleaning or flushing operations shall be disposed of in a manner consistent with US EPA, FDEP, and SWFWMD regulations.

G. Only one connection to the existing water supply system shall be allowed prior to acceptance of the main. Connection shall be made through an approved backflow prevention device. Air shall be expelled completely from the section of pipeline to be tested. If permanent air venting valves are not installed at high points along the line, corporation cocks shall be installed at these points to expel the air completely as the line is filled with water. After the hydrostatic test has been successfully completed, the corporation stops, located at the temporary jumper connection, are to be closed and plugged with brass or PVC stops.

H. The hydrostatic test duration shall be at least two hours. The test pressure at the beginning of the test shall be 180 psi for water mains and reclaimed water mains, and shall be 150 psi for sewer force mains. The water supply, and the water supply pump, shall be disconnected during the test. The test pressure shall not vary by more than plus or minus 5 psi during the test. If the pressure drops 5 psi, makeup water shall be pumped into the test pipeline section during the test duration to maintain the pressure to within 5 psi of the test pressure and the amount of leakage measured. The total amount of makeup water added shall be measured and shall be compared to the allowable leakage.

I. The allowable leakage measured during the test duration for DI and PVC pipe shall be as determined by the following formula:

$$L = \frac{SD\sqrt{P}}{148{,}000}$$

where,

L = testing allowance (makeup water), gallons per hour

S = length of pipe tested, feet

D = nominal pipe diameter, inches

P = test pressure, psi (gage)

or, as determined by Table 5A of the Hydrostatic Testing section of AWWA C600.

J. The maximum length of pipe to be hydrostatically tested shall be 2,600 feet. If an exception to this rule is granted by the County's authorized representative, and a length of pipeline greater than 2,600 feet is tested, the allowable leakage will still be figured for a 2,600-foot length of pipe line.

K. Force mains shall be pressurized for testing between the valve vault valves at the pumping station and the valve at the termination to the existing force main system or at the termination to the gravity system manhole.

L. Any exposed pipe sections, valves, fittings, hydrants, services and pipe joints shall be carefully observed during the test duration. All visible leaks shall be repaired, regardless of the amount of leakage.

M. Any damaged or defective pipeline components that are discovered after the hydrostatic testing shall be repaired or replaced with standard materials, and the test shall be repeated until a satisfactory test result is achieved. Any modifications to the new pipeline made after a successful hydrostatic test has been performed shall be cause for a new hydrostatic test of the same pipeline to be performed again.

N. No pipeline installation shall be accepted if the amount of make up water is greater than the allowable leakage. In the event of a failed test result, locate all leaks and make repairs or replacements as required, and retest the pipeline until the leakage is within the allowable limit.

O. When the test has been completed successfully, blow off the pressure from the opposite end of the line from the water supply connection, to demonstrate the limits of the length of pipeline subjected to testing. Also flush water from all hydrants, services and blow-offs, to demonstrate that they were on-line during the test.

P. The section of pipeline being tested shall be identified on the Charge Sheet. The station numbers from the construction survey shall be used to describe the extent of the tested pipelines, if available. The exact lengths and sizes, and the precise extents of the tested pipelines, and the particular valves being tested against, must all be identified clearly on the Charge Sheet. A copy of the Charge Sheet shall be provided to the Engineer of Record's and the Contractor's representative.

Q. A punch list shall be made at the end of all tests.

R. Hydrostatic Testing for HDPE Pipelines:

(1) For pressure pipelines laid wholly using HDPE pipe, a modified hydrostatic test is required. In the modified test, the pipeline shall be cleaned, flushed, filled and vented, and otherwise prepared for testing similar to other types of pipeline materials; but, prior to the test, an initial expansion period at test pressure shall be allowed, during which the HDPE pipe shall be allowed to stretch and assume an equilibrium volume against the applied pressure. During the expansion period, make-up water shall be added to the pipeline to maintain the test pressure. If pressure testing dissimilar materials (PVC and HDPE, etc.) the test shall use the PVC standard for allowable leakage. Otherwise test the HDPE individually.

(2) After the initial expansion period, the test shall commence, and shall proceed in accordance with the methods presented in Chapter 2, "Inspections, Tests and Safety Considerations" of the Handbook of Polyethylene Pipe, Plastics Pipe Institute, or using information provided by the pipe manufacturer for the material and class of pipe installed and conducted in accordance with ASTM F2164, unless otherwise approved by the County. In the event of a test failure, locate and repair the cause of the leakage and retest the pipeline. Repair all visible leaks regardless of the amount of leakage.

1.8.8 BACTERIOLOGICAL TESTING

A. After the new potable water pipelines have been hydrostatically tested, or after existing potable water pipelines have been modified or repaired, they shall be cleaned, disinfected and sampled and tested for the presence of coliform organisms in accordance with AWWA C651.

B. The County Inspector shall have been notified and shall be present at the time of the introduction of the chlorine disinfectant and water from the supply system into the main.

C. At the end of the chlorine contact period, the chlorine residual shall be determined by sampling and testing, and the results shall be reported to the regulatory agencies with the County and State. The pipelines shall then be flushed thoroughly with clean potable water until chlorine measurements show that the concentration is no higher than the chlorine concentration that is acceptable for domestic use.

D. Discharge flows from cleaning or flushing operations, and heavily chlorinated water from disinfecting operations, shall be disposed of in a manner consistent with US EPA, FDEP and SWFWMD regulations. Chapter 62-302 F.A.C. water quality standard for residual chlorine in Class III waters is <0.01 mg/L (ppm).

E. After final flushing and before the new main is connected to the distribution system, sampling and analysis of the replacement water shall be performed by an approved laboratory or by the Department of Health. Sampling locations shall be as required by AWWA C651 or as determined by the FDEP representative. Pipelines that are tested and return an unsatisfactory test result shall be reflushed and resampled, or re-disinfected, or otherwise reconditioned, until a satisfactory result is attained.

F. No potable water main shall be placed into service until the results of the bacteriological tests are satisfactory and the FDEP has provided the County with a written letter of acceptance. Potable water services, fire service, and fire hydrant leads that are exempt from a permit from the FDEP but still require bacteriological sampling in accordance with Chapter 62-555, Florida Administrative Code, shall not be placed into service until the results of the bacteriological tests are satisfactory and the Manatee County Public Works Engineering Department has provided written acceptance.

1.8.9 INSPECTION OF PRECAST CONCRETE STRUCTURES

A. Precast concrete manhole bases, sections and tops, utility vaults, and wetwells shall be subject to inspection and approval by the County.

B. The County Inspector will carefully examine the structures for compliance with ASTM C 478, these Standards, and the manufacturer's shop drawings. All structures will be inspected for dimensions, cracks, voids, blisters, roughness, soundness, scratch strength, and general appearance. After installation, there shall be no visible leaks within the manholes, utility vaults and wetwells.

C. Structures with minor imperfections may be repaired, subject to the approval of the County's Representative, after demonstration by the manufacturer that such repairs will result in strong and permanent restorations. All visible leaks in the manhole structures shall be repaired. Repair leaks by injecting grout using Avanti Multi-Grout AV-202, AV-118, or equal approved by Manatee County. The County Inspector shall have been notified and shall be present during the repair and retesting. Repairs shall be carefully examined by the County Inspector before final approval by the County.

1.8.10 AIR TESTING OF GRAVITY SEWER MAINS

A. Gravity sewer pipes shall be tested for leakage by performing the low-pressure air test. The County Inspector shall have been notified and shall be present during the pressure test.

B. All excavations for any utilities or cables within the rights-of-way or easements must be complete before a low-pressure air test is performed. Any subsequent digging or boring across the gravity sewer pipes after they have been tested shall result in a requirement for the sewer system to be retested.

C. The sewer pipes to be tested shall be flushed and cleaned prior to the test to remove dirt, debris or obstructions.

D. Each pipe section tested shall be the length of pipe between two manholes. The ends of all branches, laterals, tees, wyes and stub-outs included in a test section, as well as the ends of the pipe section to be tested, shall be plugged to prevent any air leakage, and all plugs shall be secured in place to prevent blowouts due to the internal test pressure.

E. The test pressure shall be no less than 3.5 psi and no more than 9 psi. The specific test pressure shall be determined by the average height of the natural ground water table above the pipe springline. The elevation of the ground water table shall be measured by using a test well, or by digging a test pit, or by other approved methods, or the County Inspector may accept an assumption of the surface of the ground or pavement for the ground water table elevation. The height of the ground water table above the test pipe section shall be the average of the height above the inlet of the pipe and the height above the outlet of the pipe.

F. The test pressure shall be calculated individually for each test section of pipe and shall be as determined by the following formula:

$$P = 3.5 + 0.43H \quad P \leq 9$$

where,

P = test pressure, psi (gage)
H= average height of ground water table above pipe springline, feet

G. Air shall be pumped into the test section of pipe until the pressure inside reaches the test pressure. After the pressure has been stabilized at the test pressure, remove the connection from the pressurized air source and begin the test duration. The test duration shall be as indicated in the following table:

LOW PRESSURE AIR TEST
SPECIFICATION TIME REQUIRED FOR A 1.0 PSIG PRESSURE DROP FOR SIZE AND LENGTH OF PIPE INDICATED FOR Q = 0.0015

L = length of test section, feet.

1. Pipe Diameter (in.)	2. Minimum Time (min: sec)	3. Length for Minimum Time (ft.)	4. Time for Longer Length (sec)	Specification Time for Length (L) Shown (min: sec)							
				100 ft	150 ft	200 ft	250 ft	300 ft	350 ft	400 ft	450 ft
4	3:46	597	.380 L	3:46	3:46	3:46	3:46	3:46	3:46	3:46	3:46
6	5:40	398	.854 L	5:40	5:40	5:40	5:40	5:40	5:40	5:42	6:24
8	7:34	298	1.520 L	7:34	7:34	7:34	7:34	7:36	8:52	10:08	11:24
10	9:26	239	2.374 L	9:26	9:26	9:26	9:53	11:52	13:51	15:49	17:48
12	11:20	199	3.418 L	11:20	11:20	11:24	14:15	17:05	19:56	22:47	25:38
15	14:10	159	5.342 L	14:10	14:10	17:48	22:15	26:42	31:09	35:36	40:04
18	17:00	133	7.692 L	17:00	19:13	25:38	32:03	38:27	44:52	51:16	57:41
21	19:50	114	10.470 L	19:50	26.10	34:54	43:37	52:21	61:00	69:48	78:31
24	22:40	99	13.674 L	22:47	34:11	45:34	56:58	68:22	79:46	91:10	102:33
27	25:30	88	17.306 L	28:51	43:16	57:41	72:07	86:32	100:5	115:2	129:48
30	28:20	80	21.366 L	35:37	53:25	71:13	89:02	106.5	7	2	160:15
33	31:10	72	25.852 L	43:05	64:38	86:10	107:4	0	124:3	142:2	193:53
36	34:00	66	30.768 L	51:17	76:55	102:3	3	129.1	8	6	230:46
						4	128.1	6	150:4	172:2	
							2	153.5	3	1	
								0	179:2	205:0	
									9	7	

Source: Uni-Bell Handbook of PVC Pipe.

H. No more air shall be added to the test section during the test duration. The allowable drop in pressure during the test duration shall be 1 psi or less. No gravity sewer main installation shall be accepted if the pressure drop during the test duration is greater than 1 psi.

I. In the event of a failed test result, locate all leaks and make repairs or replacements as required, and retest the sewer main until the leakage is within the allowable limit. All visible leaks in sewer pipes or at connections to manholes shall be repaired regardless of the results of the low-pressure air tests.

J. Any damaged or defective sewer main or service lateral components that are discovered after the low-pressure air testing shall be repaired or replaced with standard materials, and the test shall be repeated until a satisfactory test result is achieved. Any modifications to the new sewer collection system made after a successful test has been performed shall be cause for a new low-pressure air test of the same sewer main to be performed again.

1.8.11 TELEVISION INSPECTION OF GRAVITY SEWERS

A. TV inspection of the entire length of the inside of new gravity sewer mains shall be conducted by the Contractor. The County Inspector shall have been notified and shall be present during the TV inspection.

B. The sewer pipelines shall be thoroughly cleaned of all dirt, debris or obstructions before the TV inspection. Water shall be added to the upstream manhole until it is seen flowing from the most downstream point of the system to be inspected.

C. The TV camera shall be a self-propelled, 360 degree pan-head, color type and shall have dual DVD recording capability. The camera shall be equipped with a depth gauge calibrated to ¼-inch increments to accurately record the depth of the water in the pipeline. A calibration report shall be submitted with each digital video disk (DVD), which shall include a drawing of the depth gauge, indicating the marks on the gauge, and what depth each mark represents.

D. The County Inspector shall be present and will observe the TV monitor along with the camera operator as the camera progresses through the pipe. All pipelines will be inspected with the camera progressing in an upstream direction when possible. The camera operator shall record the manhole numbers and the distance the camera has progressed from the downstream manhole as the inspection proceeds. The operator shall stop the progress of the camera and record the distance at all locations along the pipeline where unusual or defective features are encountered. The operator shall record the distance and depth of the water in the pipe at all locations where the depth is greater than or equal to ¾ inch. The camera operator shall make records where cracked, dented or deformed pipe is found, or at joints that are not properly installed, or where infiltration is observed, or at any other abnormality or where any other defective feature is encountered.

E. At the end of the inspections, or at the end of the day, one original digital video disk (DVD) of the TV record shall be submitted to the County Inspector along with the written inspection report and depth gauge calibration for evaluation. The County's representative shall be the sole judge of whether any information imparted by the TV test DVD will cause the County to accept or reject the pipe test section.

F. Pipe grade between manholes shall not deviate by more than 1 inch from the design grade line, as measured with the television (TV) camera's depth gauge during the TV inspection, provided that such deviation does not result in a level or a reverse slope. Joint deflection and longitudinal pipe deflection between manholes that exceeds 1 inch or more than two deflections that exceed ¾ inch, as measured with the television camera's depth gauge during the TV inspection, shall not be accepted.

1.8.12 LIFT STATION INSPECTIONS

A. Prior to placing a sanitary sewer pumping station into service, the new facility will be inspected for general compliance with the County's standards and for conformance to the pump performance required by the construction drawings.

B. The County Inspector shall have been notified and shall be present during the pump start-up tests. When calling for inspection, the pumping station Contractor shall have ready the approved shop drawings, pump sheet, manufacturer's information and maintenance manuals for the facility and he shall present them to the County at the time of the inspection. The manufacturer's information shall include the model number, serial number, impeller diameter, motor horsepower, voltage, speed and certified performance curve for each pump installed. Provide County's Lift Station Maintenance Section with one copy of the lift station information described above at startup.

C. The total dynamic head for each pump shall be found by direct measurement. The performance of each pump shall be in substantial conformance with the design performance requirement as indicated on the construction drawings. The Contractor shall perform a "draw down" test and a "dead head" test for each pump.

D. Any materials or installation found not in compliance with the County standards shall be reinstalled or removed and replaced with standard materials. Any pumps found to be not conforming to the performance required by the construction drawings shall be removed and replaced with conforming pumps. Replacement pumps shall be retested until a satisfactory result is achieved. Manatee County Public Works Department and Utilities Department representatives shall be the sole judges of the suitability and acceptability of the pumps.

E. Generator Set Testing

(1) All test instruments used to perform the testing are to have been calibrated within the past 12 months. The calibration shall be performed in accordance with the standards of the National Institute for Standards and Technology.

(2) Perform all necessary tests recommended by the manufacturer and all NFPA 110 tests that are in addition to the following:

a. System Integrity Test: Verify proper installation, connection, and integrity of each of the components of the generator system before and during operation.

b. Exhaust Emissions Test: After installation at the project site, perform the standard emission test and verify that the engine complies with all applicable local, state and federal requirements for emissions.

c. Noise level test: Measure and calculate the A-weighted (DbA) levels emanating from the product assembly at three meters for at least six equally spaced points around the enclosure while the machine is under load. Include such points as the exhaust discharge, and cooling air intake and discharge. Refer to the test method as defined by ISO 3744.

d. Load Bank test: Run a two hour minimum test with all applicable field loads. The automatic transfer switch is to be engaged and fully tested for all phases of operation during this test. The load bank may be either resistive or inductive. For purposes of the load test, the NEMA LRKVA/HP Code of the pump motors is H.

e. Determine the rise by resistance of the generator while under full load. It may be performed in conjunction with the load test. This test is sometimes called a “Heat Run” or “Hot Shutdown Test” (refer to IEEE – 112) and is performed by measuring the ambient temperature and the resistance across any two phases (+/- 1% accuracy) of the generator immediately prior to starting the machine for the load test and at the conclusion of the load test and temperature stabilization. The test is performed for a minimum of two hours and at least until the measured temperature stabilizes in the machine while under full load. After the termination of the load test and the temperature stabilization, allow the machine to coast to a stop, quickly remove any residual charge on the windings and immediately measure the resistance again (+/- 1% accuracy) across the exact same leads as when measuring the ambient temperature at the beginning of the test. The rise by resistance is calculated by a formula which correlates a change in electrical resistance to a change in temperature.

(3) Compare all measured quantities with required values of testing. Correct all deficiencies identified by tests and repeat test and correction procedure until specified test requirements are met. All problems and shortcomings in the product provided, which are discovered during the testing process, shall be remedied and corrected at the expense of the supplier with no cost to the County.

(4) The County shall have the option of whether or not to witness all testing that is performed. Report all test results in writing to the County prior to acceptance of the generator by the County.

F. Fiberglass Wetwells And Valve Vaults

(1) Wetwalls and valve vaults for privately owned and maintained grinder lift stations may be fiberglass. The manufacture, dimensions, material and construction methods shall be made available for review by the County and shall be approved by the Engineer of Record in advance of construction.

(2) The quality of all materials, the process of manufacture and the finished wetwells and valve vaults shall be subject to inspection and approval by the Engineer of Record and the County Inspector. Such inspection may be made at the place of manufacture, on site, or both locations. The fiberglass wetwells and utility vaults may be inspected prior to unloading from the delivery truck and marked by the inspector showing acceptance or rejection. Discovery of failure at any time to meet the requirements of these Specifications is cause for rejection.

(3) Wetwells and valve vaults rejected after delivery to the job shall be marked for identification and shall be removed from the job at once. All wetwells and valve vaults which are damaged after delivery as determined by the Engineer of Record or County Inspector shall be rejected and shall be removed and replaced entirely at the Contractor's expense.

(4) Fiberglass wetwells and valve vaults shall be fabricated in compliance with ASTM D3753, and constructed in accordance with the manufacturer’s shop drawings and the approved construction drawings. Structures shall be inspected for general appearance, correct dimensions, blisters, cracks, holes, roughness, and soundness and must be free of defects.

(5) Minor imperfections may be repaired subject to the approval of the Engineer of Record and County Inspector and after demonstration by the manufacturer that repairs will be strong and permanent.

(6) There shall be no leaks in the fiberglass structures.

G. Lift stations will not be accepted for County ownership and maintenance until all punch list items are resolved. This includes security fence and driveways, landscaping when required, irrigation, water meter, and an FDEP acceptance letter.

1.8.13 IN-PLACE GROUTING OF ABANDONED PIPE

The County Inspector shall have been notified and shall be present at the time when the grout is pumped into the abandoned pipe. Provide stand pipes or other visual means of inspection as required by the County Inspector to determine if adequate grout material has filled the entire interior volume of the pipe.

1.8.14 TRACER WIRE CONTINUITY TEST

Prior to acceptance of pressure pipe by the County, the Contractor shall demonstrate that the locator tracer wire functions properly. During the tracer wire testing, the Contractor shall also demonstrate that the wire is connected to all services at meter boxes, hydrants, backflow preventers, butterfly valves, wastewater plug valves, tapping valves, air release valves, and blow-off valves. The Contractor shall use one of several commercially available utility locating instruments to energize and trace the locator wire for continuity. Direct signal locate method shall directly apply the current from the transmitter to the tracer wire and the signal shall be detected and followed with a receiver. Submit to the County Inspector for approval the method and equipment to be used. Testing of the locator wire shall be done prior to or concurrent with the hydrostatic pressure test.

END OF SECTION

SECTION 1.9 INSTALLATION OF PIPELINES

1.9.1 GENERAL

A. Furnish and install pipe, fittings, valves, fire hydrants, services, and all other appurtenances and incidentals complete and in-place as required by the construction drawings.

B. Where potable or reclaimed water mains are to be installed under pavement, in parking lots, etc., the main shall be DI or protected by a steel casing pipe.

C. All pipe crossing state or federal roads or local arterials & thoroughfares shall be installed in a casing pipe.

D. Services under any kind of pavement shall be Type "K" copper or Schedule 40 stainless steel.

E. Water mains 16-inches and larger shall be ductile iron or high density polyethylene or PVC (for 16" only).

F. Ductile iron pipe, with gasket materials as required in these Standards, shall be used in soil that is contaminated with low molecular-weight petroleum products, aromatic hydrocarbons, chlorinated hydrocarbons or organic solvents.

G. Trees shall not be planted or located within 10 feet of any potable water main, reclaimed water main, sanitary force main or gravity sanitary sewer main that is owned and maintained by Manatee County.

H. All distribution waterlines that enter private property become private lines and shall have a back-flow preventer installed at the right-of-way. BFP can be part of a meter assembly or a BFP / detector check assembly.

1.9.2 HANDLING AND STORAGE

A. Prior to installation, all pipe and fittings shall be inspected. Cracked, broken, or otherwise defective materials not in compliance with these standards shall not be used and shall be removed from the project site.

B. The pipeline installer shall take care in the handling, storage and installation of the pipe and fittings to prevent injury to the materials or coatings. Use proper implements, tools and facilities for the safe and proper protection of the work. Lower the pipe and fittings from the truck to the ground and from the ground into the trench in a manner to avoid any physical damages. Under no circumstances shall the pipe or fittings be dropped onto the ground or into the trenches.

C. The pipeline installer shall not distribute material on the job site faster than it can be used to good advantage. Unless otherwise approved by the County, installer shall not distribute more than one week's supply of material in advance of laying. Any materials not to be installed within two weeks of delivery shall be protected from the sunlight, atmosphere and weather by suitable enclosures or protective wrapping until ready for installation. Stored PVC pipe shall be placed on suitable racks with bottom tiers raised above the ground to avoid damage. Storage of pipe on the job site shall be done in accordance with the pipe manufacturer's written instructions.

1.9.3 CLEANING

The interior of pipe, fittings, valves and other appurtenances shall be thoroughly cleaned of all dirt, debris and obstructions before being lowered into the trenches. All pipelines shall be kept clean during and after installation and shall be protected from dirt or foreign matter entering the pipe at all times. All open pipe ends shall be securely plugged or capped water-tight when construction stops during the day, or during lunch, or overnight or during longer periods of inactivity.

1.9.4 INSTALLATION

A. Pipe, fittings, valves and other appurtenances shall be installed in accordance with the manufacturer's written installation instructions and with the provisions of "Recommended Standards for Water Works" report as incorporated by reference in Chapter 62-555, F.A.C., and with the provisions of "Recommended Standards for Wastewater Facilities" report as incorporated by reference in Chapter 62-604, F.A.C.

B. Lay all pipe true to the lines and grades indicated on the construction drawings. Gravity sewer pipe shall be laid on grade with bell upgrade and spigot downgrade. Pressure pipe, including water, reclaimed water and force main sewer, shall be laid with no less than three feet of cover, but not more than six feet of cover, unless otherwise approved by the County. The trenches and bedding for the pipe installations shall be prepared according to Section 1.3, Trenching and Excavation, of these standards. Pipe sections shall be laid in full contact with the prepared pipe bedding, with bell holes dug out, to provide a continuous and uniform bearing and support for the pipe barrel between joints. Blocking under the pipe shall not be permitted (except through casing sleeves).

C. While laying pipe in gravity sewer installations, the pipe alignment shall not deviate by more than 1/2 inch for line and 1/4 inch for grade, as measured at the pipe inverts at the manhole, from the design line and grade established on the construction drawings, provided that such variance does not result in a level or a reverse sloping pipe invert. Line and grade of gravity sewer pipelines shall be measured at the pipe invert and shall be controlled during installation by laser beam method. Other methods of controlling line and grade may be approved by the County if the laser beam method is shown to be unworkable. A "Caution - Laser Light" placard shall be displayed in a conspicuous place while laser beam pipe laying equipment is in use. Pipe grade between manholes shall not deviate by more than 1 inch from the design grade line, as measured with the television (TV) camera's depth gauge during the mandatory pre-acceptance TV inspection, provided that such deviation does not result in a level or a reverse sloping pipe invert.

D. Joining of pipe sections shall be done in strict accordance with the pipe manufacturer's written instructions. The joining surfaces of the bell and spigot and the rubber seal ring shall be thoroughly cleaned and lubricated immediately prior to joining the pipe per the written instructions. After the joint has been made, the pipe alignment shall be checked. Place sufficient backfill material around and over the pipe to secure the pipe from movement before installing the next joint to assure proper pipe alignment and joint makeup.

E. When cutting or machining pipe in the field is necessary, the pipe installer shall use only the tools and methods recommended by the manufacturer in the written instructions. Care shall be taken to not damage the pipe coating or linings. Damage to linings shall be cause for rejections of the complete section of pipe, or for the rejection of a fitting or valve. Damage to exterior coatings shall be corrected to the original standard material specification.

F. At connections to manholes or other concrete structures, the pipe joint shall be located a minimum of 18 inches outside of the edge of the structure.

G. At stub-outs from new structures to future pipelines, the pipe stub-out length shall be the same as the standard pipe length being laid. Stub-out pipes shall be closed off with standard plug or cap fittings.

H. Thrust restraint devices shall be either cast-in-place concrete thrust blocks or other approved restrained joint devices. Cast-in-place concrete for thrust blocks shall have a 28-day strength of 3,000 psi. Precast thrust blocks shall not be accepted. At all fire hydrant laterals, the lateral pipe from tee to fire hydrant shoe shall have all joints restrained. The lateral shall also be restrained from side movement by concrete thrust blocks placed at the fire hydrant shoe and at the lateral tee.

I. Place and secure a bag over all fire hydrants not yet placed into service to designate them as such and to serve as a warning that the water is not safe to drink. Bags shall be colored orange and shall have the words "NOT IN SERVICE" printed on them, and shall be N.I.S. bags as manufactured by Assured Flow Sales, or an approved equal.

J. All pressure water, reclaimed water and force main sewer pipelines laid in trenches shall have a continuous, No. 10 gauge solid copper wire attached to the pipe with minimum 30-mils polyethylene insulation rated UF or USE by Underwriter's Laboratories. Insulation shall be of proper color. The plastic wire insulation shall be color coded blue (water), Pantone purple 522 C (reclaimed water) or green (sanitary sewer). The wire shall be laid on top of the pipe and secured in place at every joint and at 5 foot intervals.

K. All pressure mains which are installed by the open-trench method, regardless of piping material, shall also include the installation of a warning tape buried directly over the pipe continuously. Pipe shall have a 3-inch wide warning tape of the proper color placed directly above the pipe 12 inches below finished grade or a 6-inch wide warning tape between 12 inches and 24 inches below finished grade. The tape shall be colored green (sewer), blue (water), or Pantone purple 522C (reclaimed water) on top, and be boldly labeled every eighteen to thirty-two (18-32) inches as follows "CAUTION POTABLE WATER LINE BURIED BELOW", "CAUTION WASTEWATER LINE BURIED BELOW", OR "CAUTION RECLAIMED WATER LINE BURIED BELOW". The tape shall have a tensile strength of no less than 4,000 psi, a dart impact strength of no less than 120 grams per 1.5 mils, be no less than 0.0055 inch thick. The tape shall be designed to last as long as the pipe it is installed over, even in adverse soils.

L. Trenching, backfilling and compaction for the newly laid pipelines shall be accomplished in accordance with Section 1.3, Trenching and Excavation.

M. In directional bore applications, one #10 gauge extra high strength copper clad steel wire shall be pulled and secured to the top of the pipe with duct tape or 10-mil thickness polyethylene pressure sensitive tape at every joint and at 24-inch intervals. The tracer wire shall have minimum 30-mil polyethylene insulation rated UF or USE by Underwriter's Laboratories. The plastic wire insulation shall be color coded blue (water), purple (reclaimed water) or green (sanitary sewer).

N. Underground splice connections shall be minimized and shall be rated for direct burial service. Spliced tracer wire connections shall be underground wire connectors meeting UL 486D test standards, as DryConn Direct Bury Lug Aqua or equivalent. The wire shall terminate at fire hydrants, backflow preventers, and at each meter box with a wire nut. The wire shall also terminate at valve boxes for butterfly valves, wastewater plug valves, tapping valves, air release valves and blow-off valves. The tracer wire shall also terminate at gate valve boxes that are not located within 200 feet of a fire hydrant, backflow preventer, meter box, butterfly valve, air release valve or blow-off valve. Meter boxes shall have at least 12 inches of wire looped into the boxes. The looped termination shall allow for the connection of an electronic locator transmitter.

O. With the County Inspector present, new water and reclaimed water mains with diameters greater than or equal to 6 inches shall be pigged then flushed and new water and reclaimed water mains with diameters smaller than 6 inches shall be either flushed or pigged and then flushed to clean all parts of the system and to remove any accumulation of construction debris, rocks, sand, gravel, silt and other foreign material. If necessary, also make use of mechanical rodding or bucketing equipment. Prior to construction of potable water mains and reclaimed water mains, the Contractor shall propose a flushing/pigging plan to the County Inspector showing on the drawings each location where each pig will be placed in the pipe and each location that the pig will be retrieved. A pig recommended by the pipe manufacturer for the type of pipe installed, shall run through pressure potable and reclaimed water main pipes greater than or equal

to 6 inches. Pipes smaller than 6 inches shall be flushed. Inspectors must be notified 48 hours in advance of any pigging and flushing operations. Short pipe lengths (i.e. stubs) may be flushed without pigs with prior approval from County. If flushing of pipes smaller than 6 inches fails, or if the potable water main or reclaimed water main has a pipe diameter greater than or equal to 6 inches, or if the water supply is not sufficient to supply the quantity of water required for flushing a new main smaller than 6-inches, the pipe shall be cleaned with pigs recommended by the pipe manufacturer. For flushing, a minimum velocity of at least 3.0 ft/sec, preferably 3.5 ft/sec, shall be obtained in the pipe. This velocity shall be maintained long enough to allow three (3) complete pipe volume changes of water for proper flushing action. Successful flushing shall be determined visually by the County Inspector and may be deemed acceptable when the water is clear and free of debris.

P. During the installation of pipelines using the horizontal directional drilling (HDD) method, the pulling force and downhole mud pressure shall be monitored with DCI's TensiTrak System, or an approved equal. Pulling force shall be limited to the maximum allowed by the pipe manufacturer, which may require use of a break-away swivel during pipe pull-back.

Q. As a marker for the Surveyor, a PVC pipe marker or 2” x 4” marker shall be inserted by the Contractor on the top of pipe for potable water mains, reclaimed water mains and sanitary force mains at intervals no greater than 200 feet apart and at locations where there is a substantial grade change. The pipe markers shall indicate the pipe diameter and shall be labeled PWM in “safety” blue, RWM in purple, and FM in green, for potable water mains, reclaimed water mains and sanitary force mains, respectively. As a marker for the Surveyor, a PVC pipe marker or 2” x 4” marker shall be inserted by the Contractor on the top of all pipe fittings (other than sanitary sewer service wyes, potable water saddles and reclaimed water saddles). The markers for fittings shall indicate the type of fitting and shall be labeled PWF in “safety” blue, RWF in purple, and FMF in green, for potable water fittings, reclaimed water fittings, and sanitary force main fittings, respectively. The Contractor is responsible for making the aforementioned markers available to the Surveyor. The Contractor shall field locate the mains and fittings when markers are not made available to the Surveyor.

R. A PVC pipe marker or 2” x 4” marker shall be inserted by the Contractor at the beginning and end of each horizontal directional drill (HDD). The HDD Contractor shall provide a certified report and bore log indicating the horizontal and vertical location every 25 linear feet or less along the pipe.

1.9.5 PRESSURE TAPS

A. Pressure taps for connection of new water, reclaimed water or sewer systems to existing County pressure mains shall be made by a County crew for tap sizes up to and including 12 inches diameter. For each pressure tap performed by the County, the pipeline installer shall provide excavation to unearth the existing pipe and provide a dry, safe tapping pit, and shall provide and install the tapping sleeve and tapping valve. Prior to the tapping of the pipe, the pipeline installer shall pressure test the sleeve and the valve to the satisfaction of the County Tapping Crew or the County Inspector. After the tap has been made, the pipeline installer shall backfill and compact the excavation, and provide all other materials and labor required to complete the work.

B. Pressure taps shall not be used to make pipeline connections in new work except to make a connection to an existing County main, and then only if it is deemed to be inconvenient or unworkable to make the connection by another method using standard fittings. Where a new phase of the system will be connected to a future phase or future subdivision, standard fittings will be assembled which shall include a line valve and stub-out and cap where the future system will be connected without need for making another pressure tap. All Pressure tap installations shall be subject to approval by the county.

C. All pressure taps for tap sizes larger than 12 inches in diameter, and for all tap sizes on concrete mains, shall be made by a Manatee County approved tapping company.

D. When installations are made under pressure, the flow of water through the existing main shall be maintained at all times. The diameter of the tap shall be at least two inches smaller than the inside diameter of the through main.

E. The Contractor shall determine the locations of the existing main to be tapped to confirm the fact that the proposed position for the tapping sleeve will be satisfactory and no interference will be encountered such as the occurrence of existing utilities or of a joint or fitting at the location proposed for the connection. No tap will be made closer than 30 inches from a pipe joint or a fitting.

F. Adequate support shall be provided under the sleeve and valve during the tapping operation. Thrust blocks shall be provided behind all tapping sleeves. Proper tamping of supporting earth around and under the valve and sleeves is mandatory. After completing the tap, the valve shall be flushed to ensure that the valve seat is clean.

1.9.6 FINAL FLUSHING OF WATER MAINS

After disinfection and prior to final acceptance, all new potable water mains shall receive a final flush to clean all parts of the system and to remove all remaining concentrations of heavily chlorinated water.

1.9.7 PIPELINE ALIGNMENTS

A. Water, sewer and reclaimed water pipelines to be installed within new roadway rights-of-way shall be situated along typical uniform alignments that minimize the number of interferences or obstructions between the different utilities.

B. Potable water pipelines shall typically be located along the southerly and easterly sides of the roadways 5 feet away from the back-of-curb line. Fire hydrants shall be installed on the same side of the roadways as the potable water mains. Potable water mains shall be on the opposite side of the street from sidewalks, sanitary force mains and reclaimed water mains.

C. Force main sewer pipelines shall typically be located on the opposite side of the road from the water mains, generally along the northerly and westerly sides of the roadways 5 feet away from the back-of-curb line when no reclaimed water pipeline is present, or no closer than 3 feet to the right-of-way line when this side of the road is shared with a reclaimed water main.

D. Reclaimed water pipelines shall be typically located on the same side of the roads as the force mains, 3 feet away from the back of curb and 5 feet away from the force mains, when force mains are present; when no force main is present, the reclaimed water main shall be located 5 feet away from the back-of-curb, on the northerly and westerly sides of the roadways. Fire hydrants on reclaimed water mains shall be on the same side of the roadway as the main.

E. Where it is demonstrated that it is not technically feasible or economically practical for the sanitary force mains or the reclaimed water mains to be on the opposite side of the street from the potable water mains; a minimum horizontal separation of potable water mains to force mains and reclaimed water mains shall be 10 feet and 5 feet, respectively.

F. Gravity-flow sanitary sewer pipelines shall typically be located under the roadway pavement along the centerline of the right-of-way, and may vary from side to side under curved roadways, but shall be no closer to the potable water main than 10 feet and no closer to the reclaimed water or force mains than 5 feet.

G. Depth of bury for potable water mains, reclaimed water mains and force mains shall typically be no less than 3 feet and no more than 6 feet of cover at final grade. Potable water mains, when crossing sewer or reclaimed water mains, shall cross over the top of the other mains with a minimum of 18 inches of vertical clearance. Where approved by the County, potable water, reclaimed water or force mains may be buried less than 3 feet deep to avoid an obstruction or another pipeline, provided the potable water mains or reclaimed water mains are constructed of ductile iron pipe or the potable water mains or reclaimed water mains or force mains are enclosed in ductile iron or steel encasement pipes. Increased thrust restraint shall be provided for pipes with less depth of cover. Written approval from the County is required prior to construction for depth of bury for potable water mains, reclaimed water mains and force mains less than 3 feet or more than 6 feet of cover.

H. A minimum of 10 feet of horizontal separation (outside of pipe to outside of pipe) is required between water mains and force mains, and between water mains and gravity sewer, and between water mains and storm sewer, and between storm sewer and gravity sewer. All other combinations of water, gravity sewer, force main, reclaimed water and storm sewer pipes must have 5 feet of separation at a minimum, except for gravity sewer and force mains, which shall have a minimum of 3 feet of separation.

I. Where it is technically feasible and economically practical, the standard minimum horizontal separations between pipelines shall be practiced. Where it is demonstrated and the County agrees that standard separations are not realistic, the county Engineer may approve reductions of the standard separations as follows:

(1) Separation from reclaimed water to gravity sewer, water, storm, or force mains may be reduced to 3 feet when the reclaimed water is DI or HDPE, or has a water tight casing pipe.

(2) Separation from gravity sewer to water or storm may be reduced to 5 feet, and separation from gravity sewer to reclaimed or storm water may be reduced to 3 feet when the gravity sewer has a water tight casing pipe.

(3) Separation from water to gravity sewer, storm and force mains may be reduced to 5 feet, and separation from water to reclaimed water may be reduced to 3 feet when the water is DI or HDPE, or has a water tight casing pipe.

(4) Separation from force main to water may be reduced to 5 feet, and separation from force main to reclaimed water may be reduced to 3 feet when the force main is HDPE or has a water tight casing pipe.

J. A standard minimum 18 inches of vertical clearance shall be practiced for water, gravity sewer, reclaimed water, storm and force mains pipes that cross. Where it is demonstrated and the County agrees that standard separations are not realistic, or where maintenance of a pipe would be made more accessible the county Engineer may approve reductions of the standard separations as follows:

(1) Clearance from water to force main, storm, reclaimed water and gravity sewer and clearance from reclaimed water to gravity sewer, water, , force main and storm may be reduced to 6 inches when the water or reclaimed water pipe is DI.

(2) Clearance from force main to water and reclaimed water may be reduced to 3 inches when the force main is below and has a water tight casing pipe.

(3) Clearance from reclaimed water to water may be reduced to 3 inches when the reclaimed water is below and has a water tight casing pipe.

K. Force mains 4 inches and larger in diameter shall be designed to minimize the adverse effects of air pocket entrapment by either the use of air release valves (ARV's) or by the selection of pumps such that air-

scouring fluid velocity is achieved within the pipeline. Where ARV's are used, long upward or downward sloping runs of pipeline should be used – rather than laying-to-cover of 3 feet minimum bury, or rather than dipping up and down under other utility structures – and the vertical alignment should be designed such that the number of ARV's required is limited to the minimum. ARV's shall be placed at high points along the pipeline and where air would otherwise become entrapped. For vertical alignments requiring ARV's, such alignments shall be fully defined and depicted on the construction plans with use of elevation notations at each station or with use of elevations given for all vertical points of intersection and slopes given on the pipeline in between all vertical points of intersection from the lift station valve vault to the termination of the force main. Any proposed significant deviation from the vertical alignment of the approved construction plans must be resubmitted for checking and re-approval by the Manatee County Utility Engineering Division representative before such revised vertical alignments may be constructed. Where an air-scouring design is proposed, and air is to be transported downstream along the pipeline by the sufficiently rapid movement of the fluid, no ARV's are required and no strict definition of the alignment by means of elevation and slope notations are required on the plans. Air-scouring velocity to move air pockets downstream at various downward slopes shall be as determined by Wheeler in Table B-9 of Pumping Station Design, by Robert L. Sanks, 1998, or as determined by an equally credible source or calculation.

1.9.8 VALVE AND HYDRANT PLACEMENT

A. In-line potable or reclaimed water valves shall generally be installed at intervals no greater than 1,600 LF on transmission mains where systems serve widely scattered customers and where future development is not expected; and at intervals of no greater than 800 LF on main distribution loops and feeders, and on all primary branches connected to these lines.

B. In residential, commercial and industrial subdivisions, water valves shall be installed at intervals no greater than 800 feet and at all sides of tees and crosses located at roadway intersections, unless there is another in-line valve on that leg within 200 feet. Additional in-line isolation valves shall be located in the run of the tee at fire hydrant connections.

C. In-line sewer valves shall be installed at intervals of no greater than 1,200 LF on sewer force mains.

D. In all instances, for both water and pressure sewer pipes, valves shall be placed to maximize the effectiveness of isolation of the pipelines during maintenance and repairs. Valves shall not be placed in curbs or gutters, blow-off valve assemblies shall not be placed in driveways or sidewalks. In-line sewer valves shall be installed near each side of a canal crossing and/or major road crossing and at all jack and bore crossings. Valves shall be placed at the right-of-way line where a public water distribution or sewer collection system crosses over onto private property and becomes a privately maintained system. All valves shall be noted and depicted on the construction and record drawings. Clearance of 18 inches or one pipe diameter, whichever is greater, shall be maintained between valves and all other fittings and joints (bells, valves, flanges, etc.).

E. Fire hydrants shall be located no more than 800 feet apart and within 400 feet of the main entrance of all non-residential buildings as measured along normal access routes, typically on the same side of the roadway as the water main. Hydrants shall be placed at the end of a water line unless within 500 feet of another hydrant. Hydrants shall not be located within 40 feet of any building, except within a right of way or within one-story single family residential areas.

1.9.9 MINIMUM PIPE FLOW DESIGN CRITERIA

A. Gravity Sewer Design. A minimum design velocity of 2.0 feet per second and a maximum design velocity of 10.0 feet per second shall be used for the design of gravity-flow pipelines. Maximum design flow depths for peak design flow rates shall not exceed 80 percent of the pipe inside diameter. Minimum slopes required to achieve a velocity of at least 2.0 feet per second are provided below:

Sewer Pipe Diameter in Inches, I.D.	Minimum Slope in Feet per 100 Feet, Manning's *n* = 0.013
8	0.40
10	0.28
12	0.22
14	0.17
15	0.15
16	0.14
18	0.12
21	0.10
24	0.08
27	0.067
30	0.058
36	0.046

B. Sewer Force Main Design. Sewer force main velocities shall not be less than 2 feet per second, with one/smallest pump running (at minimum flow) and not exceed 6 feet per second at peak-hour flow conditions. Hazen-William's roughness coefficient of a maximum of 120 will be used in the calculations.

C. Gravity Sewer, Sewer Force Main, and Pump (Lift) Station Design. Construction drawings that are submitted to Manatee County for approval shall include engineering calculations, which may include computer hydraulic modeling. Gravity sewer, sewer force main, and pump station design shall be based on peak-hour flow rate. Unless the Engineer of Record provides credible documentation and/or data to support peaking factors used in his or her calculations, peaking factors for peak hour flow rate shall be based on the following equation:

Peak-Hour Flow/Average Daily Flow = $(18 + \sqrt{P})/(4 + \sqrt{P})$

(where $\sqrt{P}$ = square root of the population in thousands)

(Peak hour factor not to exceed 4)

D. Water Distribution Main Design. Water mains shall be designed with velocities no greater than 5 feet per second at peak-hour flow conditions and no greater than 10 feet per second at maximum-day plus needed fire flow conditions. Hazen-William's roughness coefficient of a maximum of 130 shall be used in the calculations for plastic pipe and lined ductile iron pipe. Delivered flows for pressure water mains shall meet the needed fire flow rate plus a background water demand equivalent to the maximum-day demand with a residual gauge pressure not less than 20 pounds per square inch (psi). A residual gauge pressure not less than 20 psi shall be maintained at the peak-hour water demand. Construction drawings that are submitted to Manatee County for approval shall include engineering calculations, which may include computer hydraulic modeling. Unless the Engineer of Record provides credible documentation and/or data to support peaking factors used in his or her calculations, peaking factors for peak-hour and maximum-day flow rates in potable water main design shall based on the following equations:

Q-Peak = 2.2 X Average Daily Flow

Q-Max Day = 1.5 X Average Daily Flow

1.9.10 DETECTION

A. Direct buried pipe shall have 3” detectable metallic tape of the proper color placed directly above the pipe and 12" below finished grade or 6" detectable tape between 12" and 24" below finished grade.

B. Direct buried or horizontal directional drilled non-metalic pipe shall also have a tracer wire installed along the pipe alignment. The tracer wire to be used shall be a solid, 10 gauge, high strength, copper clad steel wire with a polyethylene jacket of appropriate color manufactured by Copperhead Industries or Manatee County approved equal.

C. A 2” PVC pipe marker with a painted end cap shall be inserted by the Contractor at the ROW line indicating each individual new service location or stub out. The marker shall be a 6 foot length of PVC pipe inserted 2 feet into the ground and shall be painted “safety” blue for potable water, purple for reclaimed water, and green for sewer.

END OF SECTION

SECTION 1.10 CLEANING AND DISINFECTING WATER PIPELINES

1.10.1 DESCRIPTION OF WORK

Furnish all labor, materials, equipment and incidentals required to clean and disinfect portable water pipe lines. This work is required to place all types of pipe into service as potable water lines.

1.10.2 CLEANING WATER MAINS

A. With the County Inspector present, all new potable and reclaimed water mains shall be preliminarily cleaned (pigged or flushed) in accordance with Paragraph 1.9.4.O of this Manual.

B. Fire hydrants may be used to perform flushing. A blowoff connection, if one has been installed, may also be used if diameter is determined to be large enough to flush debris. A velocity of at least 3.0 ft/sec, preferably 3.5 ft/sec, should be obtained in the pipe without causing the County's main pressure to fall below 35 psi. This velocity should be maintained long enough to allow three complete changes of water for proper flushing action and follow the requirements in Sections 1.9.4.O and 1.9.6.

1.10.3 DISINFECTING POTABLE WATER PIPE LINES

A. Prior to being placed in service, all potable water pipe lines shall be chlorinated in accordance with AWWA C651. The location of the chlorination and sampling points shall be determined by the Engineer of Record, FDEP, and Manatee County's representative. Taps for sampling shall be uncovered and backfilled by the pipeline installer as required.

B. The general procedure for chlorination shall be to flush or pig all dirty or discolored water from the lines, then introduce chlorine in approved dosages through a tap at one end while water is being withdrawn at the other end of the line. The chlorine solution shall remain in the pipeline for 24 hours.

C. Water for flushing, pigging, filling and disinfecting the new lines must be obtained without contaminating existing pipe lines. Water obtained from existing pipe lines for this purpose shall pass through an approved backflow prevention device.

D. Following the chlorination period, all concentrations of heavily chlorinated water shall be flushed from the lines at their extremities and replaced with water from the distribution system. Bacteriological sampling and analysis of the replacement water shall then be made by an approved laboratory or the Health Department in full accordance with the AWWA Manual C651. The line shall not be placed in service until the requirements of the State are met. Results of the bacteriological tests together with certified record drawings must be submitted to FDEP within 60 days of the tests.

E. Water discharged by cleaning, disinfecting and flushing operations shall be disposed of in accordance with US EPA, FDEP, and SWFWMD regulations.

F. Special disinfecting procedures, when approved by the County, may be used where the method outlined above is not practical.

END OF SECTION

SECTION 1.11 VALVES AND APPURTENANCES

1.11.1 DESCRIPTION OF WORK

Furnish all labor, materials, equipment and incidentals required and install complete and ready for operation all valves and appurtenances as indicated on the construction drawings and as specified herein.

1.11.2 GENERAL REQUIREMENTS

A. All of the types of valves and appurtenances shall be products of well established reputable firms who are fully experienced and qualified in the manufacture of the particular equipment to be furnished. The equipment shall be designed, constructed and installed in accordance with the best practices and methods and shall comply with these standards as applicable. Valves used in waterworks applications shall comply with Section 8 of NSF Standard 61 for mechanical devices.

B. All of the equipment and materials specified herein are intended to be standard for use in controlling the flow of potable water, reclaimed water, wastewater, etc., depending on the applications.

C. All valves and appurtenances shall be of the size shown on the drawings and, to the extent possible, all equipment of the same type on the project shall be from a single manufacturer.

D. All valves and appurtenances shall have the name of the manufacturer, year of the valve and the working pressure for which they are designed cast in raised letters upon some visible part of the body.

E. Special tools, if required for the normal operation or maintenance, shall be supplied with the equipment.

F. All hand actuated buried valves shall have three-piece adjustable valve boxes and 2-inch square AWWA operating nuts. Provide stainless steel extension stems and alignment rings where needed to bring the operating nut to within 4 feet below the box lid.

G. Water and reclaimed water system isolation valves shall be gate valves for sizes 2-inch through 12-inch and shall be butterfly valves for sizes 16-inch and larger.

H. With the exception of force main tapping valves, isolation valves for sewer force main pipelines shall be plug valves. Gate valves shall be used for tapping force mains.

I. Valves shall open when turning the operating nut or wheel counterclockwise and shall close when turning clockwise.

J. All bonnet bolts, gland bolts, flange connection bolts, nuts, washers, and other trim hardware exposed to the outside environment shall be stainless steel. Thrust collar tie-rod bolts shall be stainless steel. All underground bolts, nuts, and washers shall be COR-TEN or stainless steel.

K. All valves shall have a factory applied, holiday free, fusion bonded epoxy coating on the interior and exterior unless otherwise noted in the plans or the following specification. All other painted items exposed to sunlight, including field painted box lids, etc., shall be painted the appropriate color with an epoxy type paint.

1.11.3 DIRECTORY

The following valves and appurtenances are specified herein:

1.11.4 GATE VALVES

A. Where indicated on the drawings or necessary due to locations, size, or inaccessibility, chain wheel operators shall be furnished with the valves. Such operators shall be designed with adequate strength for the valves with which they are supplied and provide for easy operation of the valve. Chains for valve operators shall be galvanized.

B. Gate valves installed underground shall be provided with a box cast in a concrete pad and a box cover. Stainless steel or equivalent valve extension stems shall be provided to place the valve operating nut no more than 4 feet deep. One valve wrench, 6 feet in length, shall be provided for every 15 valves installed.

C. Gate valves 2 inches to 14 inches in diameter shall be resilient seated, manufactured to meet or exceed the requirements of AWWA C509 or AWWA C515 and shall be UL listed and FM approved where applicable. Valves shall have an unobstructed waterway equal to or greater than the full nominal diameter of the valve.

D. The valves shall have a non-rising stainless steel stem to eliminate lead content. All bolts, nuts and washers shall be stainless steel to eliminate exterior corrosion and maintain fastener strength. Manufacturer shall use Never-Seez or equivalent during assembly of bolt and nut sets to prevent galling of similar metals. Stem seals shall be provided and shall be of the O-ring type, two above and one below the thrust collar. Valves that are located above grade and located in valve vaults shall be OS&Y with flanged joints.

E. The wedge shall be ductile iron fully encapsulated with an EPDM rubber. The Elastomer type shall be permanently indicated on the disc or body of the valve. The resilient sealing mechanism shall provide zero leakage at the water working pressure when installed with the line flow in either direction.

F. The valve body, bonnet, and bonnet cover shall meet or exceed all the requirements of AWWA C509 or AWWA C515.

G. Gate valves meeting AWWA C509 requirements shall be rated for an operating pressure of 200 psi and shall be tested in accordance with AWWA C509. Valves meeting AWWA C515 requirements shall be rated for an operating pressure of 250 psi and shall be tested in accordance with AWWA C515.

H. The valves are to have 2-inch cast or ductile iron AWWA operating nuts and shall open left or counter-clockwise.

I. The valves shall be covered by a Manufacturer's 10 year warranty on manufacturer's defects and reasonable labor costs for replacement. Warranty shall become effective from the date of purchase by the end user and delivered within 30 days from the receipt of the purchase order. For publicly owned and maintained utilities, the end user is Manatee County Government.

J. Gate valves shall be assembled and tested in a certified ISO 9001:2000 manufacturing facility within the United States and provide their certification of meeting internationally recognized quality control procedures.

1.11.5 COMBINATION PRESSURE REDUCING & PRESSURE SUSTAINING VALVE WITH CHECK VALVE OPTION

A. Pressure sustaining and check valve shall be pilot operated diaphragm actuated valve with cast iron body, bronze trim, and 125-pound flanged ends. The valve shall be hydraulically operated, diaphragm type globe valve. The main valve shall have a single removable seat and a resilient disc, of rectangular cross section, surrounded on three and a half sides. No external packing glands are permitted and there shall be no pistons operating the main valve or any controls. The valve shall be equipped with isolation valves to service the pilot system while permitting flow if necessary. Main valve and all pilot controls shall be manufactured in the United States of America. Valve shall be single chamber type, with stainless steel stem.

B. Valve shall automatically reduce pressure for the downstream distribution network and sustain a minimum pressure in the high pressure main regardless of distribution demand, and as an option, shall also close when a pressure reversal occurs for check valve operations. The pilot system shall consist of two direct acting, adjustable, spring loaded diaphragm valves.

C. Valve shall be cast iron or ductile iron with main valve trim of brass and bronze. The pilot control valves shall be cast brass with 303 stainless steel trim. Valve shall be similar in all respects to Cla-Val Company, Model 92-01 or a similar control valve such as Bermad Model 723, GA Industries Model 4700 or an approved equal.

1.11.6 BALL VALVES

A. Ball valves for water and reclaimed water, in sizes 3/4-inch through 2-inch, shall be brass body, stem and ball per ASTM B 62, alloy 85-5-5-5, full port, full flow, 1/4-turn check, ball curb valves, rated for 300 psi, Mueller 300 (as specified in the table below), Ford B-Series, or approved equal, with compression, pack joint, flare, threaded or flanged ends as required. Ball valves for wastewater, 2-inch through 3-inch, shall be 316 stainless steel body, cap, stem and ball per ASTM A351, full port, full flow, 1/4-turn check, ball valves, steam rated for 150 psi, pressure rating 1,000 psi CWT, Apollo 76F or approved equal, with threaded or flanged ends as required.

Curb Stops for Water and Reclaimed Water

Pipe Material	Type of Connection	Model
HDPE	Compression x FIP	B-25170 *
HDPE	Pack Joint x FIP	P-25170 *
Copper	Compression x FIP	B-25170
Copper	Flare x FIP	B-25166
Stainless Steel	FIP x FIP Thread	B-20200

* Insert required, part number per manufacturer product information.

B. All valves shall be mounted in such a position that valve position indicators are plainly visible. Above grade ball valves shall have a vinyl coated lever handle. Lever handle, handle nut, and lever packing gland shall be 304 or 316 stainless steel.

C. Potable plastic service pipe material and compression and pack joint connectors shall not be used in soil that is contaminated with low molecular-weight petroleum products, aromatic hydrocarbons, chlorinated hydrocarbons or organic solvents. Appropriate service tubing shall apply.

1.11.7 BUTTERFLY VALVES

A. Butterfly valves shall conform to AWWA C504, Class 250 B, Mueller Lineseal XPII, DeZurik AWWA, Pratt HP-250II, or an approved equal.

B. Valve seats shall be an EPDM elastomer. Valve seate 24 inches and larger shall be field adjustable and replaceable without dismounting operator dise or shaft and without removing the valve from the line. Valves 20 inches and smaller shall have bonded or mechanically restrained seats as outlined in AWWA C504.

C. All valves shall be subject to hydrostatic and leakage tests at the point of manufacture. The hydrostatic test for Class 250 valves shall be performed with an internal hydrostatic pressure equal to 500 psi applied to the inside of the valve body of each valve. During the hydrostatic test, there shall be no leakage through the metal, the end joints or the valve shaft seal. The leakage test for the Class 250 valves shall be performed at a differential pressure of 250 psi and against both sides of the valve. No adjustment of the valve disc shall be necessary after pressure test for normal operation of valve. All valves shall be leak-tight in both directions.

D. Butterfly valve actuators shall conform to AWWA C504. Gearing for the actuators shall be totally enclosed in a gear case. Actuators shall be capable of seating and unseating the disc against the full design pressure and shall transmit a minimum torque to the valve. Actuators shall be rigidly attached to the valve body.

1.11.8 PLUG VALVES

A. Plug valves shall be eccentric, non-lubricating type with integral plug and shafts and shall be furnished with end connections and with actuating mechanisms as called for on the construction plans or as otherwise required. Valves shall seal bubble-tight or water drop-tight in both directions when tested according to the Leakage Test method of AWWA C504 with an air pressure or hydrostatic pressure of 150 psi.

B. Plug valves shall also be subjected to the internal, full body Hydrostatic Test of AWWA C504 at a pressure two times the rated pressure or a minimum pressure of 300 psi, whichever is greater. During the test, there shall be no leakage through the metal, or through the end joints or shaft seal, nor shall any part of the valve be deformed.

C. Flanged valve ends shall be faced and drilled according to ANSI B 16.1, Class 125. Mechanical joint valve ends shall conform to AWWA C111. Threaded ends shall conform to the NPT requirements of ANSI B1.20.1.

D. The plug valve body, bonnet and gland shall be cast iron per ASTM A 126, Class B. The integral plug and shafts shall be cast iron ASTM A 126, Class B, or 316 stainless steel. The entire plug, except for the shafts, shall be covered with nitrile (Buna N) rubber. The rubber compound shall have been vulcanized to the metal plug and shall have a peel strength of not less than 75 pounds per inch when tested according to

ASTM D 429, method B. The valve seat shall be at least 90 percent pure nickel, welded-in overlay into the cast iron body. The top and bottom bearings shall be 316 stainless steel.

E. Plug valves shall have a minimum full port area of 100 percent of the nominal pipe size area unless noted otherwise on the plans.

F. Valves shall have worm gear type actuators with 2-inch square operating nuts.

G. Plug valves shall be installed side-ways with plug shaft horizontal so that the plug rotates upward when it opens, with the flow entering the seat end of the valve.

H. Plug valves shall be coated inside with Protecto 401 or amine-cured novolac ceramic epoxy or another two-part epoxy suitable for sanitary sewer service which has been approved by Manatee County.

1.11.9 VALVE ACTUATORS

A. Butterfly valve and plug valve actuators. Butterfly valve and plug valve actuators shall conform to the requirements for actuators presented in AWWA C 504 and shall be either manual or motor operated. Actuators shall be capable of seating and unseating the disc against the full design pressure and velocity, as specified for each class, into a dry system downstream, and shall transmit a minimum torque to the valve. Actuators shall be rigidly attached to the valve body.

B. Manual Actuators. Manual actuators shall have permanently lubricated, totally enclosed gearing with handwheel and gear ratio sized on the basis of actual line pressure and velocities. Actuators shall be equipped with handwheel, position indicator, and mechanical stop-limiting locking devices to prevent over travel of the disc in the open and closed positions. They shall turn counter-clockwise to open valves. Manual actuators shall be of the traveling nut, self-locking type or of the worm gear type and shall be designed to hold the valve in any intermediate position between fully open and fully closed without creeping or fluttering. Valves located above grade shall have handwheel and position indicator, and valves located below grade shall be equipped with a 2-inch square AWWA operating nut located at ground level and cast iron extension type valve box.

C. Motor Actuators (Modulating)

(1) The motor actuated valve controller shall include the motor, actuator unit gearing, limit switch gearing, limit switches, position transmitter which shall transmit a 4-20 mA DC signal, control power transformer, electronic controller which will position the valve based on a remote 4-20 milliamp signal, torque switches, bored and key-wayed drive sleeve for non-rising stem valves, declutch lever and auxiliary handwheel as a self-contained unit.

(2) The motor shall be specifically designed for valve actuator service using 480 volt, 60 Hertz, three phase power as shown, on the electrical drawings. The motor shall be sized to provide an output torque and shall be the totally enclosed, non-ventilated type. The power gearing shall consist of helical gears fabricated from heat treated alloy steel forming the first stage of reduction. The second reduction stage shall be a single stage worm gear. The worm shall be of alloy steel with carburized threads hardened and ground for high efficiency. The worm gear shall be of high tensile strength bronze with hobbed teeth. All power gearing shall be grease lubricated. Ball or roller bearings shall be used throughout. Preference will be given to units having a minimum number of gears and moving parts. Spur gear reduction shall be provided as required.

(3) Limit switches and gearing shall be an integral part of the valve control. The limit switch gearing shall be made of bronze and shall be grease lubricated, intermittent type and totally enclosed to prevent

dirt and foreign matter from entering the gear train. Limit switches shall be of the adjustable type capable of being adjusted to trip at any point between fully opened valve and fully closed valve.

(4) The speed of the actuator shall be the responsibility of the system supplier with regard to hydraulic requirements and response compatibility with other components within the control loop. Each valve controller shall be provided with a minimum of two rotor type gear limit switches, one for opening and one for closing. The rotor type gear limit switch shall have two normally open and two normally closed contacts per rotor. Gear limit switches must be geared to the driving mechanism and in step at all times whether in motor or manual operation. Provision shall be made for two additional rotors as described above, each to have two normally open and two normally closed contacts. Each valve controller shall be equipped with a double torque switch. The torque switch shall be adjustable and will be responsive to load encountered in either direction of travel. It shall operate during the complete cycle without auxiliary relays or devices to protect the valve, should excessive load be met by obstructions in either direction of travel. The torque switch shall be provided with double-pole contacts.

(5) A permanently mounted handwheel shall be provided for manual operation. The handwheel shall not rotate during electric operations, but must be responsive to manual operation at all times except when being electrically operated. The motor shall not rotate during hand operation nor shall a fused motor prevent manual operation. When in manual operating position, the unit will remain in this position until motor is energized at which time the valve operator will automatically return to electric operation and shall remain in motor position until handwheel operation is desired. This movement from motor operation to handwheel operation shall be accomplished by a positive declutching lever which will disengage the motor and motor gearing mechanically, but not electrically. Hand operation must be reasonably fast. It shall be impossible to place the unit in manual operation when the motor is running. The gear limit switches and torque switches shall be housed in a single easily accessible compartment integral with the power compartment of the valve control. All wiring shall be accessible through this compartment. Stepping motor drives will not be acceptable.

(6) The motor with its control module must be capable of continuously modulating over its entire range without interruption by heat protection devices. The system, including the operator and control module must be able to function, without override protection of any kind, down to zero dead zone.

(7) All units shall have strip heaters in both the motor and limit switch compartments.

(8) The actuator shall be equipped with open-stop-close push buttons, an auto-manual selector switch, and indicating lights, all mounted on the actuator or on a separate locally mounted power control station.

(9) The electronics for the electric operator shall be protected against temporary submergence.

(10) Actuators shall be Limitorque L120 with Modutronic Control System containing a position transmitter with a 4-20MA output signal or equal.

D. Motor Actuators (Open-Close)

(1) The electronic motor-driven valve actuator shall include the motor, actuator gearing, limit switch gearing, limit switches, torque switches, fully machined drive sleeve, declutch lever, and auxiliary handwheel as a self-contained unit.

(2) The motor shall be specifically designed for valve actuator service and shall be of high torque totally enclosed, nonventilated construction, with motor leads brought into the limit switch compartment without having external piping or conduit box.

(3) The motor shall be of sufficient size to open or close the valve against maximum differential pressure when voltage to motor terminals is 10% above or below nominal voltage.

(4) The motor shall be prelubricated and all bearings shall be of the anti-friction type.

(5) The power gearing shall consist of helical gears fabricated from heat treated steel and worm gearing. The worm shall be carburized and hardened alloy steel with the threads ground after heat treating. The worm gear shall be of alloy bronze accurately cut with a hobbing machine. All power gearing shall be grease lubricated. Ball or roller bearings shall be used throughout.

(6) Limit switches and gearing shall be an integral part of the valve actuator. The switches shall be of the adjustable rotor type capable of being adjusted to trip at any point between fully opened valve and fully closed valve. Each valve controller shall be provided with a minimum of two rotor type gear limit switches, one for opening and one for closing (influent valves require additional contacts to allow stopping at an intermediate position). The rotor type gear limit switch shall have two normally open and two normally closed contacts per rotor. Additional switches shall be provided if shown on the control and/or instrumentation diagrams. Limit switches shall be geared to the driving mechanism and in step at all times whether in motor or manual operation. Each valve actuator shall be equipped with a double torque switch. The torque switch shall be adjustable and will be responsive to load encountered in either direction of travel. It shall operate during the complete cycle without auxiliary relays or devices to protect the valve should excessive load be met by obstructions in either direction of travel. Travel and thrusts shall be independent of wear in valve disc or seat rings.

(7) A permanently mounted handwheel shall be provided for manual operation. The handwheel shall not rotate during electric operation except when being electrically operated. The motor shall not rotate during hand operation, nor shall a fused motor prevent manual operation. When in manual operating position, the unit will remain in this position until motor is energized at which time the valve actuator will automatically return to electric operation and shall remain in motor position until handwheel operation is desired. Movement from motor operation to handwheel operation shall be accomplished by a positive declutching lever which will disengage the motor and motor gearing mechanically, but not electrically. Hand operation must be reasonably fast. It shall be impossible to place the unit in manual operation when the motor is running.

(8) Valve actuators shall be equipped with an integral reversing controller and three phase overload relays, Open-Stop-Close push buttons, local-remote-manual selector switch, control circuit transformer, three-phase thermal overload relays and two pilot lights in a NEMA 4X enclosure. In addition to the above, a close coupled air circuit breaker or disconnect switch shall be mounted and wired to the valve input power terminals for the purpose of disconnecting all underground phase conductors.

(9) The valve actuator shall be capable of being controlled locally or remotely via a selector switch integral with the actuator. In addition, an auxiliary dry contact shall be provided for remote position feedback.

(10) Valve A.C. motors shall be designed for operation on a 480 volt, 3-phase service. Valve control circuit shall operate from a fuse protected 120 volt power supply.

(11) Motor operators shall be as manufactured by Limitorque Corporation, Type L120 or approved equal.

1.11.10 AIR RELEASE VALVES

A. Air release valves shall be automatic float operated, GA Industries fig-929 for sewer applications, fig-920 for water and reclaimed water application, or an approved equal, with inlet size and working pressure ratings as required and NPT connections.

B. Valve bodies shall be cast iron per ASTM A 126, Class B. The orifice, float and linkage shall be stainless steel. The seat shall be (Buna N) nitrile elastomer.

1.11.11 VALVE BOXES

A. Buried valves shall have adjustable cast iron or HDPE valve boxes. Lids shall be cast iron drop type, and shall have "WATER", "SEWER", or "RECLAIM", as applicable, cast into the top. Lids will be painted "safety" blue for potable, purple for reclaimed, and green for sanitary sewer.

B. Cast iron boxes shall be two-piece, or three-piece, as required, screw type, Tyler Pipe, 6850 Series, Box 461-S through 668-S, with extensions, as required to make the desired box length, or an approved equal. Bottom barrel shall be 5-1/4 inches inside diameter, with a flanged bottom with sufficient bearing area to prevent settling.

C. HDPE boxes shall be two-piece, adjustable, 1/4-inch thick minimum heavy wall, high density polyethylene, with cast iron top and galvanized steel adjustable stem, Trench Adapter, as manufactured by American Flow Control, or an approved equal. Bottom barrel shall have flanged bottom to prevent settling. All bolts, screws and pins shall be stainless steel.

D. Reclaimed Valve Boxes shall be square 9-inch x 9-inch load bearing marked "Reclaimed Water" and painted Pantone 522C purple.

E. All valves shall either have operating nuts within 4 feet below the top of the lid or shall have extension stems with centering guides to provide an extended operating nut within 4 feet below the lid. Extension stems shall be fixed to the valve operating nut with a stainless steel fastener.

F. All potable water, sewer, and reclaimed water grade-adjustment risers shall be cast iron material just like the valve box.

G. A centering device AFC part no. B 59434 or equal shall be installed in the valve box.

H. Stand pipe shall match color code of the system being installed, (blue for potable, Pantone purple 522 C for reclaimed, and green for sanitary sewer).

1.11.12 CORPORATION STOPS AND SADDLES

A. Corporation stops for connections to ductile iron and PVC water and reclaimed water mains shall be all red brass, alloy 85-5-5-5, per ASTM B 62, and shall conform to AWWA C800. 1-inch through 2-inch corporation stops shall be ball type, 300 psi working pressure rated, with AWWA MIP threaded inlets and compression, pack joint, flare, or FIP threaded joint outlets, Mueller as shown in the table below, or an approved equal. All joints made to CTS size HDPE tubing shall use stainless steel insert stiffeners.

<u>Corporation Stops</u>

Pipe Material	Type of Connection	Mueller 300 Model
HDPE	Compression x AWWA IP Thread	B-25028 (Saddle) *
HDPE	Compression x AWWA Taper Thread	B-25008 (Direct Tap) *
HDPE	Pack Joint x AWWA IP Thread	P-25028 (Saddle) *
HDPE	Pack Joint x AWWA Taper Thread	P-25008 (Direct Tap) *
Copper	Compression x AWWA IP Thread	B-25028 (Saddle)
Copper	Pack Joint x AWWA Taper Thread	B-25008 (Direct Tap)
Copper	Pack Joint x AWWA IP Thread	P-25028 (Saddle)
Copper	Pack Joint x AWWA Taper Thread	P-25008 (Direct Tap)
Copper	Flare x AWWA IP Thread	B-25025 (Saddle)
Copper	Flare x AWWA Taper Thread	B-25000 (Direct Tap)
Stainless Steel	FIP Thread x AWWA IP Thread	B-20046 (Saddle)
Stainless Steel	FIP Thread x AWWA Taper Thread	B-20045 (Direct Tap)

*Insert required, part number per manufacturer product information.

B. Potable plastic service pipe material and compression and pack joint connectors shall not be used in soil that is contaminated with low molecular-weight petroleum products, aromatic hydrocarbons, chlorinated hydrocarbons or organic solvents. Appropriate service tubing shall apply.

C. Water and reclaimed water service connections to PVC and DIP mains shall be made using red brass saddles, alloy 85-5-5-5, per ASTM B 62. Straps, washers and nuts shall be brass or stainless steel. No ductile iron, cast iron or steel saddles will be allowed. Saddles shall be Smith Blair 325 Bronze saddles with Stainless Steel or brass extra wide strap or equivalent.

D. Connections to PVC sanitary force mains for services up to 2 inches shall be made using Romac Style 306 double bolt stainless steel service saddles or equivalent.

E. Service and air release valve (ARV) connections to HDPE water, reclaimed water and sewer mains may be made using Romac Style 306H saddle or approved equal. All saddles shall be properly sized per the manufacturer product information and be installed according to the manufacturer's written instructions. Connections to HDPE mains shall not be made using narrower saddles similar to the Smith-Blair 325.

1.11.13 FLANGED ADAPTERS AND PLAIN END COUPLINGS

Plain end couplings and adapters shall be fusion-bonded epoxy coated carbon steel with Ethylene Propylene Diene Monomer (EPDM) rubber gaskets and stainless steel nuts, bolts and spacers. Acrylonitrile butadiene (NBR) gaskets shall be used for potable water mains that are located in soil that is contaminated with low molecular-weight petroleum products or non- chlorinated organic solvents or non-aromatic organic solvents. Fluorocarbon (FKM) gaskets shall be used for potable water mains that are located in soil that is contaminated with aromatic hydrocarbons or chlorinated hydrocarbons. Fluorocarbon (FKM) gaskets shall be used for potable water mains if the soil is contaminated with aromatic hydrocarbons or chlorinated hydrocarbons, and is also contaminated with low molecular-weight petroleum products or organic solvents. Couplings shall be Dresser Style 38, or another approved equal. Flange adapters shall have a plain end compression seal similar to the style 38, with an ANSI 125 Class flange on the opposite end, and shall be Dresser Style 128W or an approved equal. Stainless steel backup rings shall be used for force mains that are located in corrosive environments including wetwells and valve vaults.

1.11.14 HOSE BIBS

Hose bibs shall be 3/4-inch or 1-inch brass, polished chromium plated brass, with vacuum breaker as noted on the drawings.

1.11.15 SWING CHECK VALVES

A. Check valves shall be swing type, weighted lever, conforming to AWWA C508. Valves shall be iron-body, bronze-mounted, single disk, 175 psi working pressure for 2- through 12-inch, 150 psi for 14- through 30-inch, with ANSI B16.1 Class 125 flanged ends, by Mueller; No. A-2600-6-01 (sewer), No. A-2602-6-01 (water), or AVK Series 41, or an approved equal.

B. When there is no flow through the line, the disc shall hang lightly against its seat in practically a vertical position. When open, the disc shall swing clear of the waterway.

C. Check valves shall have bronze seat and body rings, extended bronze or stainless steel hinge pins and stainless steel nuts and bolts on bolted covers.

D. Valves shall be so constructed that disc and body seat may easily be removed and replaced without removing the valve from the line. Valves shall be fitted with an extended hinge arm with outside lever and weight.

1.11.16 HYDRANTS

Hydrants shall be dry barrel, nostalgic style, and shall be AVK Model 2780, or approved equal, and shall conform to AWWA C502 and be UL/FM certified, and shall in addition meet the specific requirements and exceptions which follow:

A. Hydrants shall be according to manufacturer's standard pattern or nostalgic style and of standard size, and shall have one 5-inch Storz connection or equivalent with two 2½- inch hose nozzles.

B. Hydrant inlet connections shall have mechanical joints for 6-inch pipe.

C. Hydrant valve opening shall have an area at least equal to that area of a 5 1/4-inch minimum diameter circle and be obstructed only by the valve rod. Each hydrant shall be able to deliver 500 gpm minimum through its two 2 1/2 -inch hose nozzles when opened together with a loss of not more than 2 psi in the hydrant per AWWA C502.

D. The upper and lower stem rod shall be stainless steel and shall have a breakable stem-rod coupling of stainless steel, or cast iron or ductile iron with a fusion bonded epoxy coating, with stainless steel pins and clips.

E. Hydrants shall be hydrostatically tested as specified in AWWA C502 and shall be rated at 250 psi minimum.

F. The operating nut shall be 1 ½ -inch pentagon shaped with a protective weather cover, and open counter clockwise.

G. All nozzle threads shall be American National Standard.

H. Each nozzle cap shall be provided with a Buna N rubber washer.

I. All hydrants shall be traffic break away type and allow for 360 degree rotation to position the Storz connection/nozzle in the desired direction after installation.

J. Hydrants must be capable of being extended without removing any operating parts.

K. Hydrant extensions shall be fusion bonded epoxy coated inside and outside with a stainless steel stem. The breakaway coupling can be fusion bonded epoxy coated or stainless steel. Only one hydrant extension is allowed per hydrant.

L. Weepholes shall be excluded from fire hydrants.

M. Hydrant main valve closure shall be of the compression type opening against the pressure and closing with the pressure. The main valve shall be faced or covered with EPDM elastomer, which shall seat on a bronze ring.

N. Hydrant bonnets, weather cover, nozzle section, caps and shoe shall be cast iron or ductile iron, and shall be holiday free fusion-bonded epoxy coated at the factory, per AWWA C550, inside and outside. Lower barrel shall be fusion bonded epoxy coated inside and outside. Aboveground parts shall also have a top coat of Sherwin-Williams Acrolon 218 HS acrylic polyurethane or approved equal; color Safety Yellow for fire hydrants that are connected to the potable water system or Pantone 522C purple for fire hydrants that are connected to the reclaimed water system.

O. Exterior nuts, bolts and washers shall be stainless steel. Bronze nuts may be used below grade.

P. All internal operating parts shall be removable without requiring excavation.

1.11.17 RESTRAINED JOINTS

A. Pipe joints shall be restrained by poured-in-place concrete thrust blocks or by other mechanical methods, including stainless steel tie rods, Stargrip and Allgrip, as manufactured by Star Pipe Products or Megaflange and 2000 PV, as manufactured by EBAA Iron Sales. Flanged joints may be used above ground.

B. Restrained joints may also be Lok-Ring, as manufactured by American Cast Iron Pipe Company, or an approved equal.

C. Restrained joint designs which require wedges and/or shims to be driven into the joints in order to disassemble the pipe shall not be allowed.

1.11.18 TAPPING SLEEVES AND VALVES

A. Tapping valves shall meet the requirements of AWWA C509/C515 with ductile iron body and shall be rated for a pressure of 250 psi. The valves shall be flanged with alignment ring by mechanical joint with a non-rising stainless steel stem. All bolts, nuts and washers shall be stainless steel. Manufacturer shall use Never-Seez or equivalent during assembly of bolt and nut sets to prevent galling of similar metals. Stem seals shall be provided and shall be of the O-ring type, two above and one below the valve's thrust collar. Valve shall be designed for vertical burial and shall open counterclockwise. Operating nut shall be AWWA standard 2-inch square for valves 2 inches and up. Valves shall have an unobstructed waterway equal to or greater than the full nominal diameter of the valve to accommodate full size shell cutter. Gaskets shall cover the entire area of the flange surface and be 1/8-inch minimal thickness of red rubber. The wedge shall be ductile iron fully encapsulated with EPDM rubber. All bolts, nuts and washers between the sleeve and valve shall be stainless steel.

B. Tapping sleeves and saddles shall seal to the pipe by the use of a confined "O" ring gasket, and shall be able to withstand a pressure test of 180 psi for water lines or 150 psi for sewer force mains for one hour with no leakage in accordance with AWWA C110. A stainless steel 3/4-inch NPT test plug shall be provided for pressure testing. All bolts joining the two halves shall be stainless steel and shall be included with the sleeve or saddle. Sleeves and saddles shall be fusion applied epoxy coated, or be made of 18-8 Type 304 stainless steel. Saddle straps shall be 18-8 Type 304 stainless steel.

1.11.19 TRACER WIRE BOXES

Tracer wire test station boxes shall be provided at plug valves, butterfly valves, blowoff valves, gate valves, fire hydrants and backflow preventers as indicated in these Standards. Tracer wire test station boxes for yard service shall be 2 ½ inch diameter, 15 inch length, ABS plastic with a cast iron rim and lid, P200NFGT as manufactured by Bingham & Taylor, or equal approved by Manatee County. Where test boxes will be in streets or subject to vehicular traffic, use B&T Model P525RD, 5 ¼ -inch diameter or equal, centered in a separate concrete pad similar to a valve box pad.

END OF SECTION

SECTION 1.12 PRECAST CONCRETE MANHOLES AND WETWELLS

1.12.1 DESCRIPTION OF WORK

Furnish all materials, labor and equipment to construct manholes and wetwells consisting of precast concrete sections as indicated on the construction drawings.

1.12.2 PRECAST CONCRETE SECTIONS

A. Precast concrete manhole grade rings, flat slab tops, conical tops, risers and base sections shall be fabricated in accordance with the material and design standards of ASTM C478, except as modified herein.

B. Portland cement shall conform to ASTM C150, Type II, and concrete shall have a minimum compressive 28-day strength of 4,000 psi.

C. The manufacturer shall make a minimum of four standard test cylinders for each 100 cubic yards of concrete (or part thereof) that is cast each day. These test cylinders, along with sections cast that day, shall be marked in such a way that the test results can be matched with the appropriate castings. Two cylinders shall be cured with the product until the forms are stripped. At this time, one cylinder shall be broken to ascertain that a minimum strength of 2000 psi has been reached prior to moving the product from the forming location. The remaining two cylinders shall be cured and tested in accordance with ASTM C192 and C39. The average compressive strength for each day's production shall be greater than 4000 psi with no more than 10% of the tested cylinders falling below 4000 psi. In no case shall any cylinder strength fall below 3500 psi. All cylinder strengths shall be certified by a Florida Licensed Professional Engineer. Failure to meet these requirements for any day's production is cause for rejection of all sections cast that day.

D. Minimum wall thickness for manholes shall be 8 inches or 1/12 the inside diameter of the manhole, whichever is greater. The minimum thickness for the bottom of the base section shall be 8 inches.

E. Reinforcing steel shall be as specified in ASTM C478.

F. Precast manhole structures shall be free of cracks, holes, voids, blisters or rough surfaces. Manholes shall be water-tight, and shall be generally sound and free of defects of any sort. Lift holes shall not penetrate through the wall of any manhole tops, risers or base sections. Holes passing part-way through the manhole section walls for lifting devices shall be filled with cement or epoxy grout after the manhole has been set in place.

G. All sections shall meet the manufacturing tolerance requirements of ASTM C478 or the following casting tolerances, whichever are more severe:

Wall Thickness	+/- 3/8 inches
Inside Diameter	+/- 3/8 inches
Outside Diameter	+/- 1/2 inches
Height or Length	+/- 3/8 inches

H. Pipe openings shall meet the recommended tolerances of the individual manufactured pipe to manhole connectors; however, the horizontal location shall be within +/- 2 degrees of arc of that detailed on the shop drawings.

1.12.3 MANHOLE INVERTS

A. Benched inverts shall be provided and shall be monolithically cast or shall be a secondary casting in a cured base section as per ASTM C478.

B. The width of the invert channel shall be the same as the inside diameter of the connected sewer pipes and shall have a "U" - shaped cross-section with the bottom of the channel shaped to correspond with the lower half of the pipe. The depth of the channel shall be a minimum of half the inside diameter of the connected pipes.

C. The channel shall be formed smooth and streamlined, and, where the flow changes directions, shall have true curves of the largest radius possible within the manhole base. The maximum change of direction of flow within a manhole shall be 90 degrees.

D. The channel invert slope shall be uniform through the manhole and shall have a minimum vertical drop of 1 inch from the inlet(s) to the outlet.

E. For all manholes with pipes 16 inches in diameter and larger, the base section and invert channels shall have a pre-molded plastic liner as described in subsection 1.12.6, "Concrete Manholes and Wetwells with Protective Liners."

1.12.4 RESILIENT PIPE CONNECTORS

A. Connections of manholes to pipes shall be made using resilient boot or seal connectors manufactured in accordance with ASTM C923 and shall maintain a resilient, hydrostatic seal between the pipe and the connector and between the connector and the manhole structure.

B. Connectors shall be installed in strict accordance with the written installation instructions of the manufacturer. Non-shrink grout shall be placed in the gap between the boot or seal and the manhole invert channel, to make a smooth transition, unless otherwise directed by the manufacturer's instructions.

1.12.5 MANHOLE AND WETWELL JOINTS

A. Joints between manhole sections and wetwell sections shall be modified tongue and groove, or modified bell and spigot, with a continuous elastomeric ring gasket joint conforming to the requirements of ASTM C443. In addition to the ring gasket, an additional sealing device shall be provided as follows:

(1) A minimum of six-inches wide of Rub'R-Nek RU116 elastomeric based plastic joint wrap shall be centered over the joint, on the outside of the manhole, or

(2) A minimum of ½-inch x ¾-inch bead of Adeka Ultra Seal P-201 hydrophilic urethane paste applied to the interior of the joint just before manhole section assembly.

B. In addition to the requirements in subsection A, above, all joints between manhole sections, for manholes receiving turbulent flow and wetwells with a liner, shall also have a continuous strip of liner material that is a minimum of 6 inches wide weld-fused all around the inside face of the joint, per manufacturer's recommendations, or they shall have the joint filled at the inside face with a butyl rubber sealant meeting Fed. Spec A-A-272B to form a bead across the joint, so that no bare concrete inside the joint is left exposed.

C. For standard manholes without liners, fill the joint at the inside face with non-shrink grout and strike the joint smooth and uniform with the manhole interior walls.

D. For manholes with and without plastic liners and with concrete grade-adjustment rings, joints between the top section and the grade ring, and between grade rings, and between the grade ring and the cast-iron ring frame shall be made with non-shrink cement mortar.

1.12.6 CONCRETE MANHOLES AND WETWELLS WITH PROTECTIVE LINERS

A. Drop manholes, manholes with opposing flows, manholes immediately upstream of a lift station wetwell, manholes with gravity sewers greater than 12 inches in diameter, force main termination manholes and the first two manholes downstream from a force main termination manhole, and pumping station wetwells shall have a full plastic liner. The liners shall be integrally cast into the concrete tops, risers and base sections, which shall be in all other respects manufactured in accordance with ASTM C478 using Type II Portland Cement per ASTM C150. The plastic liner shall be generally chemically resistant to the wastewater environment and shall be mechanically affixed to the precast concrete manhole sections so that there can be no separation of the liner from the manhole sections during the service lifetime.

B. The plastic liner shall have no surface degradation when exposed to nitric acid, hydrochloric acid, ammonia, sodium hydroxide, sulfuric acid, acetone, unleaded gasoline and turpentine in accordance with test method ASTM D1308, and shall not be attacked when immersed in acetone according to test method ASTM D2152.

C. The manhole liner shall be FRP GU Liners, as manufactured by GU Florida or an approved equal. The base liner for manholes shall have preformed flow channels with water-tight gasketed pipe bell connections or boot holes that extend to the outside profile of the precast concrete structure. FRP GU, HDPE AGRU, or PVC DURA-PLATE liners shall be installed with the remaining sections, including the cone section of the manhole.

D. The wall thickness for manholes and wetwells with liners, including the liner thickness, shall be 8 inches minimum or 1/12 of the inside diameter, whichever is greater. The minimum thickness of the bottom of the base section shall be 8 inches under the bottom of the flow channel.

E. Manhole cast iron frames shall be adjusted to grade with concrete grade rings same as for un-lined manholes. Lined manholes shall be equipped with a GU Liner Convertible Collar as manufactured by GU Florida or an approved equal. The collar shall form a water-tight seal to the manhole top with a GU Lip Seal rubber gasket, or approved equal. The collar shall be sealed water-tight against the base of the cast iron frame using a butyl rubber sealant.

1.12.7 MANHOLE RINGS AND COVERS

Rings and covers shall be gray iron castings, conforming to ASTM A48, Class 30B, and shall be pattern USF 170-CE-1, as manufactured by U.S. Foundry, with the words “MANATEE COUNTY”, “SANITARY SEWER”, and “(YEAR)” cast into them. Frame and cover castings shall be dense and even grained, and shall be free of blowholes, warping, or any other defects not true to pattern. Seating surfaces of covers and frames shall be machined true to prevent rocking. Castings shall be designed and tested to bear an AASHTO H-20 wheel loading with and added 30 percent impact factor and shall be Class Heavy Duty traffic bearing.

1.12.8 MANHOLE INSERTS

Watertight manhole inserts shall be required for all sanitary sewer manholes installed. Inserts shall be as manufactured by FRW Industries, or approved equal. Inserts shall be complete with a self-cleaning relief valve. Relief valves shall operate on a pressure differential of 1 psi or less. Neoprene gaskets shall be installed under the insert lip to insure a leak proof seal.

1.12.9 PRECAST CONCRETE MANHOLE INSTALLATION

Precast concrete sections shall be set vertical and in true alignment as indicated by the construction plans. Excavation, bedding foundation and backfill shall be done in accordance with the Trenching and Excavation section of these Standards. All manholes shall meet the following installation tolerances:

A. The finished manholes shall not be out of plumb by more than 3/8 inch per 10 feet of height.

B. Any jog or offset of the inside wall surface at a joint shall not exceed 1/2 inch.

C. Variation in the joint width around the circumference of the manhole shall not exceed 1/4 inch.

1.12.10 SETTING MANHOLE RINGS

Manhole rings and covers shall be set to conform accurately to the finished ground or pavement grade as indicated on the construction drawings or as directed by the County. Rings on manholes shall be set concentric with the adjusting rings and sealed so that the space between the top of the adjustment rings and the bottom flanges of the rings will be made watertight. A ring of mortar shall be placed around the outside of the bottom flange at least one inch thick and pitched to shed water away from the frame. Mortar shall be extended to the outer edge of the masonry and finished smooth and flush with the top of the flange.

1.12.11 SPRAY-APPLIED MANHOLE LINERS

Existing concrete or brick and mortar manhole structures that are to be modified or rehabilitated by adding a manhole liner shall have a spray-applied liner installed according to the material and procedural requirements of the “Modifications to Existing Structures, Piping and Equipment,” Section 1.2 of this Manual.

1.12.12 PROTECTION FROM FLOODWATER INFLOW

Wastewater sewer systems shall be designed to prevent flood or surface waters from entering the collection system. Manhole rims and clean-out tops shall be elevated 4 inches above the 100-year flood level, or 8 inches above the 25-year flood level, or 4 inches above the surrounding unpaved ground surface within a 20-foot radius, whichever is highest, or the manhole covers and clean-out lids shall be designed and installed with factory-made watertight, tamper proof, sealing devices. Manholes with rims less than the above required elevations shall be PAMTIGHT as manufactured by CertainTeed, or equal as approved by Manatee County.

Cleanouts not at or above the required elevations shall have the clean-out adapter solvent welded watertight to the clean-out riser. Plugs are to be recessed square key with Teflon plumber’s tape wrapped on threads to make a watertight seal.

END OF SECTION

SECTION 1.13 PUMP (LIFT) STATIONS

1.13.1 DESCRIPTION OF WORK

Furnish all labor, materials, equipment and incidentals required to install complete automatic, underground pump stations with all required equipment installed in a concrete wetwell and adjacent concrete valve vault. The principal items of equipment shall include two submersible motor-driven sewage pumps, valves, internal piping, automatic pumping level controls, control panel and telemetry. All materials shall be new, without defects and of the best quality. All materials furnished and all work done shall be in strict accordance with the National Electrical Code and all local requirements and codes.

All pump stations that re-pump sewage (directly or indirectly) from other pump stations shall have an on-site generator equipped with an automatic power transfer switch, transducer level controls with backup float switches, ultrasonic flow meter, and a force main pressure transducer.

1.13.2 STRUCTURES AND EQUIPMENT

A. Pump Station Wetwell. All wetwells 6 feet diameter and larger, and all pump stations that are owned and maintained by Manatee County, shall be precast concrete with a full protective liner, in accordance with section 1.12, designed to accommodate the peak hour development flow from all contributing areas. The wetwell shall have a minimum of 4 feet from the lowest invert to the wetwell bottom. The pump station wetwell size shall be determined using the following formula to determine the minimum volume between the off-level elevation and the influent invert elevation:

MIN. VOLUME (GALS.) = PUMP CAPACITY (G.P.M.) X 4

Wetwell diameters shall be 6 feet or larger. 4-foot and 5-foot diameter wetwells shall be used only for special grinder pump applications as approved by the County on a case by case basis. The minimum wall thickness for concrete wetwells with liners shall be as follows:

DIAMETER	WALL THICKNESS	DIAMETER	WALL THICKNESS
4' - 0"	8"	8' - 0"	8"
5' - 0"	8"	10' - 0"	10"
6' - 0"	8"	12' - 0"	12"

The pump station wetwell size and control equipment shall be designed to limit the pumping cycles of each pump to a maximum of 5 starts per hour for duplex stations and 3 starts per hour for triplex stations. Pump stations discharging through pipes 12 inches or larger shall have more than two variable speed pumps. The pump cycle off level shall be no lower than the top of the sewage pumps. The lead pump on level shall be no higher than 18 inches below the invert elevation of the influent pipe for duplex stations, and no higher than 24 inches below the invert for triplex stations.

All pump stations shall have a single gravity-flow influent pipe discharging into the wetwell. Multiple gravity pipelines and force mains upstream shall all terminate at a separate manhole before flowing into the pump station wetwell. The influent gravity sewer shall be aligned, so that the inflowing stream drops into the front side of the wet well opposite from the riser side, within an angle of 25 degrees on either side of the centerline passing between both pumps in a duplex station, or between two of the three pumps in a triplex station. As an option to the to the influent gravity sewer main entering the wetwell directly between the pumps, a plastic composite/fiberglass drop bowl and pipe (Reliner/Duran, Inc. or equal) shall be installed, as shown on Detail US-20.

B. Valve Vault. A precast valve vault for three gate valves, two weighted lever swing check valves, and a pump-out connection shall be constructed adjacent to the wetwell. The valve vault shall have a 2-inch

PVC drain installed at a 2 percent slope and with a P-trap installed inside the wetwell. The pump-out connection shall be equipped with a gate valve and a male aluminum quick-coupler; 4-inch for 4-inch or smaller valve assemblies, 6-inch for all others. The valve vault shall be of adequate size to allow a minimum clearance of 12 inches from flanges to the valve vault wall, 18 inches from flanges to the valve vault floor and 12 inches from the cross to the valve vault wall at the force main exit point. The depth of the valve vault, as measured from the bottom of the top slab to the valve vault floor, shall not exceed 6.0 feet for duplex lift stations. All valves and fittings shall have factory applied, fusion bonded epoxy coating on interior and exterior. Valve vaults designed with exit pipe turning 90 degrees either way to exit to the side rather than straight through shall have two horizontal braces from the elbow to the walls to hold the assembly solidly in place.

C. Entrance Hatches. The lift station wetwell and valve pit shall be equipped with an aluminum access cover of adequate size to permit easy removal and installation of sewage pumps and equipment. The wetwell access cover shall be a minimum 36" x 48" single (preferred) or double door. The valve pit access cover shall be a minimum 48" x 48" double door. All access covers shall be constructed of aluminum with a minimum load rating of 300 lbs/sq. ft. and equipped with stainless steel hinges, a recessed lifting handle which lies flush with the door surface, and a stainless steel staple which may be used to secure the door with a padlock when closed. The doors shall have a raised diamond thread pattern to provide a skid-resistant surface and shall open to 90 degrees and lock automatically in that position, with a handle to release the doors for closing. The hatch assemblies shall be as manufactured by U.S. Foundry, Halliday, or an approved equal.

D. Sewage Pump Assemblies. Each pumping station shall have a minimum of two identical, totally submersible sewage pump assemblies which are rated and suitable for continuous duty, underwater operation. These units and their associated power and signal cables shall have watertight integrity to a depth of 65 feet. The pump, pump motor and associated components shall all be the products of the same manufacturer. Pump assemblies shall be painted after assembly with an approved air dry enamel which will adequately protect the exterior housings from the corrosive environment in the wastewater sewer system. Coating thickness shall be a minimum of 4 mils.

Factory testing of the pump assemblies shall be required and as a minimum, shall include:

(1) All tests recommended by the manufacturer.

(2) Verify the integrity of assembly and connections (no leaks, tightness of hardware, proper alignment, assembly, etc.) and that the nameplate and specified pump and pump motor (HP, Voltage, Phase and HZ) correspond.

(3) The motor windings and seal housing chambers shall be hi-potted to test for insulation defects and moisture content. Check the resistance of the stator windings with a bridge to verify that the readings of all three phases are basically equal and within tolerance.

(4) Energize pump motor, verify direction of rotation and that it corresponds to the nameplate.

(5) Provide a written report of all testing with the shipped pump.

All pump assemblies shall be warranted against defects in workmanship and materials for whichever is the greater of: a 5 year pro-rated warranty from the date of purchase or as provided in the Defect Security Agreement with the County.

Month 0 –18 = 100% Month 19-31 = 75% Month 32-45 = 50% Month 46-60 = 25%

Pump motors shall have the following electrical characteristics: 230 -volt for 20 HP and lower or 460 -volt for greater than 20 HP, 3 phase, 60 hertz, minimum service factor of 1.15, continuous duty, maximum NEMA LRA/HP code of J, and NEMA Design B. Pump motors shall be non-overloading throughout the entire range of operation. The pump motors are to be induction motors which are built with moisture resistant Class F insulation. Each motor shall be capable of a minimum of 10 starts per hour without degradation of the windings. The pump motor shaft shall be made from a single, solid, forging of 303 (or better grade) stainless steel, tapered, keyed, and supported by a minimum of one heavy duty upper radial ball bearing and a minimum of one heavy duty lower thrust bearing. The bearings shall have a minimum B-10 life rating of 60,000 hours. The shaft and shaft extension shall be of minimum length and maximum diameter to reduce shaft deflection and prolong bearing life. The pump motor shall be designed for pumping at a maximum sump ambient of 40 degrees C (104 degrees F). The stator of the pump motor shall be copper wound (aluminum stator windings are not permitted) and equipped with at least two heat sensors (klixons installed in the stator end turns) which will shut the motor off in case of excessive heat built up. The heat sensors shall be connected in series with the motor starter coil so the starter is tripped if the heat sensor opens. The pump motor housing shall be oil or air filled type for cooling purposes. Oil filled motors shall use pure dielectric insulating oil. The pump motor shall be capable of operating at +/- 10% of rated voltage and +/- 5% of rated frequency without excessive heating. The pump motor shall not exceed a rise by resistance of 90 degrees C at full load over the entire performance curve. It shall be able to operate intermittently a full load while unsubmerged without damage. Power cables and signal cables shall be continuous (without splices from the pump motor to the power supply). Power cables shall be sized for operation at the rated service factor. The power cable shall be a single, multi-conductor, STW-A type that is epoxy potted and compression fitted for water tight sealing into the pump cable entry. As a minimum, the nameplate for the pump motor shall include: MODEL/SERIAL NUMBER, HORSEPOWER, VOLTAGE, FULL LOAD AMPS, FULL LOAD RPM, PHASES, FREQUENCY, NEMA LRA CODE, NEMA DESIGN, INSULATION CLASS, AMBIENT TEMPERATURE, LEAD CONNECTIONS FOR DIRECTION OF ROTATION, TYPE OF DUTY, TYPE OF BEARINGS, and PUMP IMPELLER SIZE. All electrical components used in or in conjunction with the sewage pump assembly shall be UL approved when UL approval is available for that type component.

The pumps shall be capable of pumping raw, unscreened sewage and able to pass a minimum 3-inch solid. Each pump shall have an enclosed cast iron or ductile iron impeller and shall be equipped with a bronze wear ring. The pump lifting cover, stator housing, and volute casing shall be gray cast iron, ASTM A48, Class 30. Castings shall have smooth surfaces that are devoid of blow holes or other casting defects. The pump lifting bail shall have a minimum of 4-inch diameter clear opening and shall be cast as part of the motor cover or fabricated from 316 stainless steel. All fasteners exposed to raw sewage shall be series 300 stainless steel. The backside of the impeller shall have pump-out vanes to keep contaminates out of the seal area. The impeller shall be dynamically balanced, and shall be single - or multi-vaned, with an enclosed or recessed, non-clogging design. There shall be a maximum clearance of .125 inches between the seal housing and the top of the impeller. The pump shall have a minimum of two mechanical seals mounted in tandem with an oil chamber between the two seals. The oil chamber of each pump shall be equipped with an electric seal fail sensor which shall be connected to an indicating light at the control panel to annunciate a seal failure and a set of relay contacts for purposes of remote notification via the County RTU system. The unit shall be designed so that when the outer seal fails, the contaminates that enter shall not enter the bearing housing and cause damage to the bearings. The inner seal shall be replaceable without disassembly of the motor housing and without the need for special tools. As a minimum, the rotating seal faces shall be carbon and the stationary seal faces shall be ceramic.

All pumps shall be center-line discharge type constructed so that the discharge flange supports the full weight of the pump. Pump assemblies shall be complete with ductile iron or gray cast iron BPIU discharge

base elbows that are bolted directly to a base plate which is bolted directly to the wetwell floor, guide flange adapter and guide rails. The discharge elbow shall have an automatic coupling end facing the pump and an ANSI Class 125 flanged end ready for connection to the flange of the riser pipe. The design of the pump assembly installation shall be such that the pump will be automatically connected to the discharge piping when lowered into place along the guide rails, and shall seal leak-tight to the discharge base elbow by the weight of the pump assembly resting in the installed position. The pump base elbow shall be mounted on an ASTM A588 (COR-TEN) steel mounting plate that is level and is bolted to the wetwell floor using ¾-inch 316 stainless steel threaded rods with Hilti HVA anchors or approved equal anchors and shall have base ell mounting bolts of ¾-inch 316 stainless steel that are mounted in place and welded to the plate. The pump guide rails for each pump shall be constructed of two separate whole length sections of 2 inch Schedule 40, 316 stainless steel pipe set 4 inches on center.

The pump assemblies shall be easily removed for inspections or service, requiring no fasteners to be removed or disconnected, and no need for personnel to enter the confined space of the wetwell, by simply hauling up on the lift chains. The lifting chains shall be type 316 stainless steel, and shall be 1/4-inch for pumps less than 10 HP and 3/8-inch for pumps 10 HP and greater, or as required by the pump assembly weight. Chains shall be attached to the pump lifting bails using stainless steel shackles and shall extend to the inside top of the wetwell. All rails and mounting hardware shall be 316 stainless steel.

E. Riser and Fittings. All force main piping and fittings within the wetwell and the valve vault from the pump base elbow to the check valve, shall be DR11 HDPE, only 90 degree molded HDPE fittings shall be used inside the wetwell. All connections to iron bodied flange fittings in the wetwell (pump base ells) and to the valve vault check valves shall be made using HDPE flange adapters with 316 stainless steel backup rings. No iron bodied fittings shall be located between the pump base elbow and the check valves. All HDPE connections shall be thermal fused or electro-fused. All piping downstream of the cross in the valve vault to the plug valve shall be PVC DR 14 C-900.

All flanged fittings inside the wetwell and valve vault shall use stainless steel bolts, nuts and washers. All threads shall be treated with Bostik Never-Seez anti-seizing compound or approved equal. All bolts on the flange connection at the pump base ells shall have two nuts with a lock washer between them or a nylon lock nut.

All stainless steel fasteners shall be treated with Never-Seez prior to assembly and torque according to the fitting manufacturer's recommendation. The bands around the piping shall be constructed from a minimum of 1 inch wide by 12 gauge stainless steel strap stock, shaped to fit the piping and sized to grip the piping without deforming the pipe when bolted to the braces.

For wetwells up to 6 feet in diameter and pipe less than 8 inches, the pipe support system shall be constructed using 1 $^{5}/_{8}$-inch stainless steel channel. For wetwells 8 feet in diameter and larger or pipe 8 inches and larger, the pipe support system shall be constructed using 4-inch stainless steel angle.

F. Hardware. A multi hook stainless steel hanger shall be installed inside the wetwell access opening for supporting the float switches and pump electric cables. The multi hook hanger shall be constructed from ¼-inch x 2-inch type 316 stainless steel flat stock with individual hooks constructed of ¼" type 316 stainless steel rod stock. Individual hangers shall be installed on each side of the upper guide rail bracket for each pump to support the pump lifting chain and power cable. The lifting chain hook shall be constructed from 3/8-inch type 316 stainless steel rod stock. The pump power cable hook shall be constructed from 1/4-inch x 1-inch type 316 stainless steel flat stock.

G. Painting and Coating. All paint and other coatings shall be applied in accordance with the product manufacturer's specifications for the surfaces being coated. . All iron body fittings inside the valve vault

and wetwell shall have a factory applied Protecto 401 or equal epoxy coating inside and outside. No field-applied paintings or coatings shall be applied to the valves or fittings.

1.13.3 ELECTRICAL

A. Service and Metering. The Contractor shall be responsible and shall pay for any permits, fees, and inspections required by the local power company for service installations. Three phase power shall be used unless otherwise approved by the County. Service for pump motors of 20 horsepower or smaller shall be 230 volts. For motors greater than 20 horsepower, the service voltage shall be 460. No phase converters will be accepted. All pump stations shall be equipped with a knife-type fused safety switch in a NEMA 4X stainless steel enclosure, lockable in the ON and OFF position, between the service meter and the control panel to permit servicing of the main breaker without removing the service meter. All meter bases shall be aluminum. Minimum service size shall be 100 amp. Conduit connections to the disconnect shall be sealed using Myers conduit hub connectors (disconnect side).

B. Conductors. All power conductors shall be single conductor, 600 volt, type THW or THHN stranded copper. Minimum conductor size shall be #12 AWG. ALUMINUM WIRE IS NOT PERMITTED. All control wiring shall be single conductor #14 AWG, 600 volt, type THHN stranded copper. All terminations and interconnections of control wiring shall be by means of compression-type lugs of the nylon self insulated type with an inner bronze insulation grip sleeve on identified terminal strips. All control wiring shall be color coded as indicated on the standard details.

C. Conduit. All power conductors from the utility source to the service meter shall be enclosed in PVC Schedule 80 conduit below ground and PVC schedule 80 or aluminum rigid conduit aboveground (NO I.M.C. ALLOWED). All pump stations shall be equipped with one conduit to the wetwell for each pump power cables and a separate conduit to the wetwell for the control (floatball) and signal cables. In pump stations with large horsepower pumps and pumps equipped with sensor cables, the conduit size and quantity shall be determined by the County. All conduit to the pump station wetwell shall be minimum 2-inch Schedule 80 PVC and shall be run by the shortest route possible. All terminations shall be made inside the electrical control panel. No junction boxes mounted under control panel for pump and float cables will be accepted. All flexible conduit shall be non-metallic.

D. Control Panel. All pump stations shall have one automatic control panel. The control panel enclosure shall be NEMA 3RSS/12. It shall be continuously welded at the seams and the welds are to be ground smooth. The enclosure shall be equipped with a rain shield and the door shall be sealed with a closed-cell neoprene door gasket. The outer door shall be held in the closed position with a 1/4-turn handle that has a minimum of three latching points. The door shall be padlock lockable in the closed position. The inner swing panel (dead front door) shall be stainless steel or aluminum with a continuous stainless steel piano type hinge, and shall have 1/4-turn handles at the top and bottom with single latch contact points each. Both doors shall be hinged on the same side. The enclosure backplate shall be 12 gage or thicker aluminum, stainless steel, or powder coated steel.

The control panel, along with the safety switch box and electric utility power meter, shall be attached to horizontal support channels with stainless steel fastening systems designed for use with the support channel. The horizontal channels shall be 1-5/8 inch, 12 gage (or thicker) stainless channels (Unistrut, B-Line or County approved equal), attached with stainless steel two piece pipe clamps or stainless steel U-bolts to two vertical 3 inch diameter stainless steel, schedule 40 pipes. The pipe clamp or U-bolt ends shall be covered with plastic caps to prevent injury to personnel. The 3 inch vertical pipe shall have plastic end caps or stainless steel end caps at the top and shall be anchored in concrete adjacent to the pump station wetwell. See County Standard US-22. No fittings shall enter from the top or back of the control

panel. All fittings shall enter the side or bottom of the control panel and shall penetrate the control panel with either sealing locknuts or Myers Hubs.

The overall control panel shall be a minimum of 30"x 36"x 12" deep and of adequate size to completely cover (without crowding) all wiring and components mounted inside it. It shall have provisions for the mounting of all basic and optional controls and instrumentation. Install engraved nameplates defining door mounted hardware. The electrical control panel shall have a complete wiring schematic which is laminated in plastic and attached to the inside of the outer control panel door.

All components shall be installed per the most current NEMA and NEC regulations and standards. The components shall be industrial NEMA rated (I.E.C. is not acceptable) and UL approved when UL approval is available for that particular type component. The components of the panel shall be held in place with stainless steel, slotted, plan head machine screws with star type washers. The panel shall be tapped to accept the mounting screws of the components and no self-tapping type screws shall be used. The control panel shall have the following items installed on the back plane or on aluminum “high hats” attached to the back plane, so the body of the component is flush with the dead front door to allow operation and reset of the components without opening the dead front door: main power breaker, emergency power circuit breaker, individual pump circuit breakers, control circuit breaker, G.F.I. duplex receptacle circuit breaker, and TCU-Pack telemetry/motor controller. The control panel shall have the following items installed directly to the back plane: individual motor starters, power distribution blocks, neutral bar assembly, grounding bar/lugs, terminal strips, RTU battery case, 2 inch PVC panduit for control and telemetry wiring and fuses, surge suppressor, and resistors for telemetry/controller. The control panel shall have one G.F.I. duplex receptacle installed on the dead front door. The exterior of the control panel shall have one emergency generator receptacle, one flashing red light, and one audible alarm with reset button. The individual placement of all the components of the control panel shall be installed as indicated in the standard details.

E. Ratings. The controls shall be rated for the supply voltage (230 or 460 volts), 3 phase, 60 hertz. In the event that three phase power is not available at the location of the control panel, the pump station shall be connected for capacitor start/run motors. The capacitors shall be installed in a separate NEMA 4X enclosure that shall be mounted adjacent to the control panel. All control voltage to the wetwell shall not exceed 24 volts DC.

F. Wiring Method. All power conductors from the main circuit breaker to all other circuit breakers shall be connected via a Square D model LBA363206, Marathon #1333555, or equal power distribution block. All electrical panel components shall have individual neutral wires. All neutral wiring shall be connected via a Square D model SN12-125 neutral assembly. Wiring is to be continuous with no splices between connections. Provide a Square D model PK9GTA grounding bar at the bottom of the backplate. This grounding bar will be the central connection point of all ground wires for the system with the exception of the pump power cords and surge arresters. The pump power cords and surge arresters shall be grounded via individual ground lugs that are to be attached to the control panel back plane. Provide two 12 terminal, Ideal Model 89-208 terminal strips to make electrical connections in the control panel. One terminal strip shall be used exclusively for 24 volt connections (TB-1) and the other shall be used exclusively for 120 volt connections (TB-2). The power distribution block, neutral assembly, grounding bar and terminal strips shall be located as indicated in the standard details. Use stainless steel screws and fasteners for all wiring connections.

G. Circuit Breakers. The panels shall be equipped with main and emergency circuit breakers for a minimum size of service of 100 amps. The main and emergency circuit breakers shall be interlocked so that when one is in the open position, the other circuit breaker must be in the closed position. There shall also be an individual circuit breaker for each pump, a control circuit breaker, a 20 amp circuit breaker for site

lighting, a 20 amp circuit breaker for the flow meter (re-pump stations only) and a minimum 20 amp circuit breaker for the 120 volt GFI protected convenience outlet that is mounted on the inner control panel door. All circuit breakers shall be mounted in the control panel per the standard details. The circuit breakers shall be of the heavy duty thermal magnetic trip variety. For circuit breakers up to 100 amps, use Square D series QOU or County approved equal. For circuit breakers greater than 100 amps, use Square D "Mag Guard" series with adjustable trip for the pumps, main and emergency breakers shall be Square D QBL, HGL, or JGL.

H. Motor Starters. Pump motors shall each have a NEMA-rated, magnetic starter sized as called for on the construction plans. No starter smaller than NEMA size 1 shall be used. Starters shall be solid state, full voltage, non-reversing type. These starters shall be Siemens series ESP-100 or County approved equal with special phase loss protection and a special factory coating of the solid state circuit boards which prevents hydrogen sulfide damage. The starters shall be equipped with under voltage release and overload protection on all three phases. The motor starter contacts shall be constructed so that they may be easily replaced without removing the starter unit from its mounted position. The overload reset device shall be operable without having to open the inner swing panel.

I. Lightning Arresters. There shall be a Ditek DTK Series, Category B or Square D lightning arrester/surge suppressor installed on the incoming power source. It shall be mounted on the bottom exterior or placed inside of the safety switch enclosure and connected to the LOAD SIDE of the safety switch and overload reset.

The main circuit breaker and the RTU circuit breaker shall also each have a Ditek CM+Series lightning arrester/surge suppressor connected to the load side of the breaker wiring. These lightning arresters/surge suppressors shall be mounted with the supplied adhesive strip on the back of the "high hat" supporting the breakers. The exact model lightning arresters/surge suppressors shall be based on the voltage and number of phases of the protected circuits.

J. Liquid Level Switches and Sensors. A minimum of four float switches are to be installed in the wetwell to monitor and control liquid level height. The switches shall be a single pole mercury switch (as manufactured by Anchor Scientific Inc., or County approved equal). They shall be designed to actuate when the longitudinal axis of the float is horizontal, and deactuate when the liquid level falls one inch below the actuation elevation. The switching arrangement shall be normally open when deactivated. The output leads shall be connected in the control panel as shown in the standard details. The control voltage to the level switches shall be 24 volts DC and the switches shall be sized to operate at that voltage. In addition to the above, pump stations that re-pump sewage flows (directly or indirectly) from other pump stations shall have a Dylix model GSX3-PP100-A49-B49-XX-CO1-D49 pressure transmitter mounted inside a stilling well as the primary level sensor.

The wiring connecting the control panel to the wetwell floats shall be a continuous length (no splices) of flexible rate 600 volt, minimum diameter of #18, type S.O. cable. The float switches shall have all connections made inside the control panel. The wiring shall be installed so there is a minimum of four feet, and a maximum of 6 feet, of excess cable in the wetwell for relocation of the float switches.

K. Alarms. Each pump station shall have one flashing red light and one audible alarm with silence button to signal high level conditions. An automatic shutoff timer for the horn (variable setting 0-20 minutes) is to be installed in the control panel. A flasher unit shall be installed in the control panel to operate the flashing light. These components shall be mounted to the control panel as illustrated in the standard details.

L. Generator Receptacle. A generator receptacle to permit the installation of a portable emergency generator as the power source when the local utility power company power supply is lost shall be installed

on the outside of the control panel as indicated on the standard details. It shall be directly connected to the emergency circuit breaker inside the control panel. The emergency and main circuit breakers shall have a mechanical interlink between them which shall allow only one source to supply power to the control panel at any given period of time. The generator receptacles shall be:

Power Supply	Required Receptacle
0-100 Amp, 230 Volt	Russell Stoll JRSB1044FR
100-200 Amp, 230 Volt	Russell Stoll JRSB2044FR
0-200 Amp, 460 Volt	Russell Stoll JRSB2034HR

M. Seal Leak Moisture Detector. Provide for each pump a moisture sensing sensor which will detect when moisture has penetrated the seal chamber. The moisture seal detector shall be connected to the County RTU system to notify pump station maintenance personnel when a seal has allowed moisture to enter the oil chamber of the pump. An indicating lamp is to be mounted in the control panel as illustrated in the standard details to also signal the seal failure.

N. Remote Terminal Unit. The remote terminal/pump control unit shall be a complete TAC Pack TCU system as manufactured by Data Flow Systems, Inc. The unit is to be a fully programmable, dual function device. It shall be used to monitor and control SCADA equipment and it shall have all the necessary hardware and software to control three pump motor starters. Its operation is based on level inputs from a minimum of four float ball switches in the wetwell. It shall have the ability to control pump alternation, activate and deactivate remote and local alarms, and communicate with the TAC II SCADA System. It shall be equipped with RTU surge protection and a transient filter shield. The unit shall have an uninterruptible power source and contain all the components and be electrically connected as indicated in the standard details. It shall be equipped with an antenna with supporting mast and coaxial cable that is required by the manufacturer for that particular system. The installation shall include the required FCC licensing. The antenna and mast shall be rated for 150 MPH winds. Pump stations that re-pump sewage flows (directly or indirectly) from other pump stations will also require an Analog Monitor Module to receive input from the force main pressure transducer and flow meter.

Remote terminal/pump control units are not required for privately owned and maintained pump stations.

O. Grounding. Install a 5/8" x 10' copper-clad ground rod for each electrical service. Connect to the ground rod with a ground clamp and run a #6 bare copper wire to connect with the electrical panel grounding bar. Provide another, separate ground rod, clamp and #6 bare copper wire to connect directly to the antenna mast.

P. Site Lighting. A minimum 300 watt halogen light (LED equivalent) or equal shall be mounted on the RTU system tower for illumination of the pump station area. The manually operated light shall be a Regent Model EQ300M1 or equal, mounted on ¾-inch galvanized rigid conduit connected to the RTU tower using 90 degree korns clamps.

1.13.4 GRINDER PUMP (LIFT) STATIONS

A. Grinder pumps shall be used where the required discharge rate is low and the discharge pipe is required to be smaller than 4-inch diameter. Grinder pumping stations shall be constructed essentially to the same standards as the larger standard pumping stations, with full plastic liners, dual pumps with guide rails, control panels, RTUs, antennas and masts, etc., but sized smaller to accommodate the lesser capacity. Wetwell diameters may be smaller than 6 feet, but shall be no smaller than 4 feet. Riser pipes shall be no smaller than 1.25 inches diameter, and force mains shall be no smaller than 2 inches diameter. Ball check valves shall not be used.

B. Grinder pumps will not be required to pass a 3-inch solid, but shall rather be capable of grinding all materials normally found in domestic raw wastewater into a pumpable slurry. The grinder cutters shall be made of 440C stainless steel hardened to Rockwell 60C. Motors shall be 230 volt, 3 phase, 60 hertz, 3450 or 1750 RPM speed, and shall otherwise meet the same requirements as for the larger standard sewage pump motors. Minimum hatch cover sizes for grinder pump station wetwells shall be 30 x 36 inches.

C. There shall be an approved shut-off valve (tapping gate valve) installed at the connection of a grinder pump station pipeline to a County force main, and where the grinder pump station is maintained by a private entity, there shall be another approved shut-off valve (plug valve) installed at the point where the grinder pump pipeline enters the public right-of-way or public utility easement. The force main shall be at least 18 inches below the top slab within the valve vault. A 90 degree bend, which is turned down, shall be installed 18 inches outside of the valve vault to lower the force main to obtain a minimum 3 feet of cover.

Wetwells and valve vaults for grinder lift stations may be fiberglass or HDPE plastic. If fiberglass, the resins used shall be a commercial grade unsaturated polyester or vinyl ester resin. The reinforcing materials shall be commercial Grade "E" type glass in the form of continuous roving and chop roving, and shall have a coupling agent that will provide a suitable bond between the glass reinforcement and the resin. The inner surface exposed to the chemical environment shall be a resin-rich layer of 0.010 to 0.020 inches thick. The inner surface layer exposed to the corrosive environment shall be followed with a minimum of two passes of chopped roving of minimum length 0.5 inch (13 mm) to maximum length of 2.0 inches (50.8 mm) and shall be applied uniformly to an equivalent weight of 3 oz/ft^2. Each pass of chopped roving shall be well-rolled prior to the application of additional reinforcement. The combined thickness of the inner surface and interior layer shall not be less than 0.10 inch (2.5 mm). The interior surface shall be free of crazing, delamination, blisters larger than 0.5-inch in diameter and wrinkles of 0.125-inch or greater in depth. Surface pits may be permitted if they are less than 0.75-inch in diameter and less than 0.0625-inch deep. Voids that may not be broken with finger pressure and that are entirely below the resin surface shall be permitted if they are less than 0.5-inch in diameter and less than 0.0625-inch thick. After inner layer has been applied, the wetwell and valve vault wall shall be constructed with chop and continuous strand filament wound manufacturing process which insures continuous reinforcement and uniform strength and composition. Wetwell and valve vaults may require resin fiber-reinforced bottoms.

Wetwell bottom shall have a minimum 3-inch anti-flotation ring. Wetwell and valve vault bottom shall be designed to resist all pressures induced by water, soil and wheel loads with a maximum deflection of 1/4-inch.

No hardware shall penetrate the wetwell walls. The wetwell wall shall include built / molded in channel supports for every 8 feet of vertical discharge piping for mounting pipe support braces and for mounting both guide rails and hooks to hang float balls, pump lifting chains, etc. at the top of the wet well. All pipe openings shall have resilient pipe to wetwell seals.

The 1:1 bottom fillet may be molded or formed fiberglass or plastic or concrete. Concrete also may be used on the top of anti-flotation ring and as required to resist buoyancy. The wetwell and valve shall resist flotation with ground water level assumed to be at finished grade. The Engineer of Record shall submit flotation calculations to Manatee County when submitting Construction Drawing approval.

All fiberglass and plastic wetwells and valve vaults located such that a vehicle may run over it shall have a minimum dynamic-load rating of 16,000 lbs. when tested in accordance with ASTM D3753. To establish this rating, the complete wetwell and valve vault shall not leak, crack, or suffer other damage when load tested to 40,000 lbs. and shall not deflect vertically downward more than 0.25 in. at the point of load

application when loaded to 24,000 lbs. Thickness of fiberglass and plastic wetwells and valve vaults shall be determined by calculations submitted when submitting construction drawings for approval. The Engineer of Record shall perform the calculations or shall submit a certification that he or she reviewed calculations prepared by others and that the aforementioned requirements have been met.

The wetwell cylinder shall have the minimum pipe-stiffness values shown in table below when tested in accordance with ASTM D3753 Table 1.

WETWELL LENGTH (FT.)	PIPE-STIFFNESS F/AY, [PSI (k Pa)]
3 - 6.5	0.72 (4.96)
7 - 12.5	1.26 (8.69)
13 - 20.5	2.01 (13.86)
21 - 25.5	3.02 (20.82)
26 - 35	5.24 (36.13)

The exterior surface shall be relatively smooth with no sharp projections, free of blisters larger than 0.5-inch in diameter, delamination or fiber show.

Each wetwell and valve vault shall be designed and built to meet all required ASTM D3753 designations for dimensional requirements, hardness, chemical resistance, and workmanship. Test records shall be provided to the Owner/Engineer of Record and to the County Inspector.

The Contractor shall set sections vertical and in true alignment. The finished wetwell and valve vault shall not be out of plumb by more than 3/8-inch per 10 feet of height.

Each wetwell and valve vault shall be marked on the inside and outside with the following information: Manufacturer's name or trademark, factory location, serial or model number and total length.

1.13.5 FLOODING

Wastewater pumping station structures and electrical and mechanical equipment shall be fully protected from physical damage from flood water intrusion by the 100 -year flood. Wastewater pumping stations shall remain fully operational and accessible during the 25 year flood. Regulations of state and federal agencies regarding obstructions of the pumping station site by flood waters shall be observed during the design of the development.

1.13.6 ENTRANCE HATCH ELEVATIONS

The wetwell and valve vault top and entrance hatches shall be set at least 4 inches above the 100-year flood plain elevation, or 8 inches above the 25-year flood plain elevation, or 6 inches above the surrounding grade, or 12 inches above the adjacent roadway crown elevation, whichever is highest. Where this is not practical, deviation from the above must be approved by the County on a case-by-case basis.

1.13.7 WATER SERVICE

All pump stations shall be equipped with a 3/4-inch lock shield and loose key water service (hose bib) adjacent to the valve vault. Each water service shall be equipped with a 5/8-inch water meter, a reduced-pressure principle backflow preventer (Watts Model 909 or Equal) and a 3/4-inch brass hose bib. The water meter and backflow preventer shall be located within two feet of the pump station easement (or property) line. All water meters shall be obtained from the Manatee County Water Meter Department.

1.13.8 SHOP DRAWINGS AND INSPECTIONS

When calling for inspection, the Contractor shall have the approved shop drawings available on-site for review by the inspectors. The Contractor shall also deliver to the Lift Station Section inspector, the pump manufacturer's technical manual with the model number, serial number, and certified pump curve, for each pump prior to acceptance by Manatee County for maintenance.

1.13.9 REQUIRED EASEMENTS

An easement for ingress and egress to the pump station and an easement for the pump station must be granted and recorded before the pump station can be accepted by Manatee County for operation and maintenance.

1.13.10 SITING

A. The siting of all pump station facilities shall be subject to review and approval by Manatee County. All pump stations shall be located on a separate parcel of land or within a utility easement in common open space. The station shall be properly sited with due consideration of the neighborhood, surrounding site features, landscaping, aesthetics, safety and security. The station and associated landscaping shall not be sited on a right-of-way, private road, median, front yard of a residence, or within a visibility triangle. The pump station wetwell, valve vault, control panel, and telemetry antenna shall not be sited within 20 feet of overhead power lines.

B. Each pump station site shall have a vehicular access drive paved with a concrete or asphalt surface course over a base course. The drive shall be designed to allow a service truck to park off of the right-of-way or roadway easement and to also allow the service truck to back up to the wetwell such that the wetwell is directly to the rear of the truck or adjacent to the side of the truck. The pump station control panel, telemetry antenna and hose bib shall not be located between the vehicular access driveway and the wetwell and/or valve vault.

C. There shall be at least a 20-foot easement in all directions from the pump station site equipment. There shall be no obstructions within the easement such as buildings, walls, fences, etc., other than those that are part of the pump station and identified in these standards. A minimum setback of 5 ft shall be provided between pump station structures/equipment and the security fence. Pump station easement shall extend a minimum of 15 ft beyond all four sides of the security fence. If the pump station is adjacent to the street's right-of way, the pump station easement shall extend to the ROW line. The lift station site shall be made accessible with a minimum 30 ft wide corridor/easement.

D. Surface stormwater flow shall be directed around the pump station site. The site shall be graded to provide sheet flow of site runoff away from the equipment and direct it to a suitable swale or drainage outfall. The construction drawings shall include a pump station site plan with a grading plan and landscaping plan.

1.13.11 LANDSCAPING & IRRIGATION

A. Landscape trees and shrubs. The pump station site shall have shrubs planted around the perimeter of the pump station security fence in a hedge-like placement. Shrubs shall have a minimum spacing of 3 feet between the centers of the shrub's base stem. For private pump stations that are located in non-residential areas, shrubs are optional for the sides that are not adjacent to thoroughfare roads, non-thoroughfare roads, and residential areas. For pump stations that are located adjacent to thoroughfare roads and non-thoroughfare roads, a minimum of two small understory trees or palm trees shall be planted between the pump station security fence and the right of way line. For pump stations within

residential areas or located adjacent to residential areas, a minimum of two additional understory trees or palm trees; for a total of at least four understory trees or palm trees shall be planted around the pump station (these landscaping requirements are not applicable to pump stations that only serve one single family residence.) A minimum setback of 5 feet shall be provided between the shrub's base stem and the security fence to provide an access way for service personnel. A minimum setback of 10 feet shall be provided between the trunk of understory trees/palm trees and the security fence.

Understory trees shall not have a mature height exceeding 30 feet. Small understory trees, palm trees and shrubs shall not have evasive roots. The minimum height of understory trees shall be six (6') feet at time of placement. The minimum height of palm trees shall be fifteen (15') feet at time of placement. The minimum height of shrubs shall be two (2') feet at time of placement. Shrubs shall have three gallon root balls. Shrub growth habits shall be upright, globose, or columnar. Shrub growth habits shall not be spreading or broad spreading. The understory trees and palm trees shall be planted to accent the shrub placement. Tops of root balls of plants shall be set at or slightly above existing grade. All plant material to be Florida Grade #1 or better, as defined in "Grades and Standards for Nursery Plants," State of Florida Dept. of Agriculture. Plants shall be sound, healthy, vigorous, and free from plant diseases, insects, pests, or their eggs and shall have healthy normal root systems. Plants shall be nursery grown stock, freshly dug. No heeled in, cold storage, or collected stock shall be accepted. Ground covers shall have sturdy fibrous root systems. Staking and bracing shall be done on all trees using Arbor tape and the Duckbill anchor system, in accordance with sound nursery practices.

The shrubs, understory trees and palm trees shall be of the drought tolerant, low maintenance varieties. Plant selection shall be based on soil water retention as well as soil pH.

Examples of acceptable vegetation are as follows:

	SOIL CONDITIONS WHERE PLANT WILL GROW		pH RANGE	
PLANT NAME	**Damp to poorly drained soils w/ low percolation**	**Well drained sands w/ high percolation**	**Plant tolerates acidic & alkaline soils**	**Plant tolerates acidic soils only**
UNDERSTORY TREES (Mature height not exceeding 30 feet)				
Little Gem Magnolia (Magnolia grandiflora)	X			X
Southern Wax Myrtle (Myrica cerifera)	X	X	X	
Peregrina (Jatropha intergerrima)		X	X	
Bottle Brush Tree (Callistemon citrinus)		X		X
Crape Myrtle Tree (Lagerstroemia Indica)		X		X
Feijoa (Feijoa sellowiana)		X	X	
PALMS				
Cabbage Palms (Sabal palmetto)	X	X	X	
Pindo Palms (Butia capitata)		X	X	
Dwarf Royal (aka Christmas) Palm (Veitchia merrillii)		X	X	
SHRUBS & BUSHES				
Cocoplum (Chrysobalanus icaco)		X	X	
Pipestem (Agarista Populafollia)	X	X	X	
Sweet Viburnum (Viburnum odoratisimum)		X	X	
Yew podocarpus (Podocarpus macrophyllus)		X	X	

The following plant species shall not be planted at the lift station site:

Melaleuca quinquenervia (commonly known as Punk tree, Malaleuca); Schinus terebinthefolius (commonly known as Brazilian Pepper); Casuarina species (commonly known as Australian Pine); Rhodomyrtus tomentosa (commonly known as Downy Rose Myrtle); Mimosa pigra (commonly known as the Catclaw Mimosa); Dalbergia sissoo (commonly known as the Indian Rosewood); and Cupaniopsis anacardioides (commonly known as the Carrotwood).

B. Ground cover. There shall be no vegetation within the lift station fencing. Site shall include a polypropylene weed barrier fabric that is covered with a minimum of 2-inches of washed shell, or rock within lift station fencing. Landscaping stones shall be inert and nonleaching. Crushed lime rock shall not be acceptable. Site shall include a polypropylene weed barrier fabric that is covered with 3 to 4-inches of shredded wood-type mulch that is located under the shrubs and up to the outside of the security fence. Polypropylene weed barrier fabric that is covered with 3 to 4-inches of shredded wood-type mulch shall be located under the trees for a minimum distance of 3 feet from the tree. Bahia, St. Augustine or Floritam sod or shredded wood-type mulch with a polypropylene weed barrier fabric shall be extended from the shrubs to the lift station easement line.

C. Irrigation. An irrigation system shall be connected to a non-potable water source. A weather-tight time clock with built-in transformer, minimum of four zones (Rainbird ESP-4M, Toro CC-M-9, or equal) and a rain sensor (Mini-Clik, or equal) shall be furnished and installed. The irrigation controller shall be in a lockable control panel and attached with stainless steel two piece pipe clamps or stainless steel U-bolts to two vertical 3 inch diameter stainless steel, schedule 40 pipes or equal pipe support. The pipe clamp or U-bolt ends shall be covered with plastic caps to prevent injury to personnel. The 3 inch vertical pipe shall have plastic end caps or stainless steel end caps at the top and shall be anchored in concrete. The irrigation system control panel recommended location is outside of the fence and behind the shrubs. The Contractor shall furnish the County a padlock with a set of two keys for the irrigation control panel. The number of zones shall be based on the proposed site, planting configuration, watering distribution, irrigation system demand, and type of vegetation to be irrigated.

The irrigation system shall be installed to irrigate the trees, shrubs and grassed areas; and designed to provide three-fourths (3/4”) to one (1”) inch of water per week and be in conformance with irrigation restrictions established by the Southwest Florida Water Management District (not restricted if using reclaimed water). The irrigation system shall adhere to the requirements of the Manatee County Land Development Code and to the “Standards and Specifications for Turf and Landscape Irrigation Systems”, latest edition, as published by the Florida Irrigation Society, Inc. A permanent sprinkler system with distribution lines underground with mist and/or bubbler nozzles, as appropriate, above the ground are acceptable. A micro-irrigation system located within the planting beds of shrubs and trees is acceptable for that type of installation. In each accent, isolated or separate tree planting bed, a tree bubbler (Toro 514-20 or equal), shall be installed at each tree. In addition, a four (4’) foot section of flexible PVC shall be provided for the tree bubbler at each tree. Drip line hoses shall have built-in emitters (Toro DL2000 or equal).

D. Radio signal interference. Landscape buffer plantings are to be field adjusted in coordination with the siting of the lift station’s radio antenna to eliminate signal interference. The antenna for the existing or proposed radio telemetry unit at the lift station requires direct line-of-sight signaling capability to the Utilities Department office that will receive the signal. There shall be an unobstructed horizontal angle of fifteen (15°) degrees from the antenna mast (7 1/2 degrees on both sides of the direct line-of-sight azimuth). No tree shall be planted within the designated unobstructed angle for a twenty (20’) foot horizontal distance measured from the mast.

1.13.12 ACCESSIBILITY AND SECURITY

The pumping station shall be readily accessible by maintenance vehicles during all weather conditions. The facility shall be located off the traffic way of streets and alleys. All hatches, electrical panel and irrigation panel doors shall be provided with lockable hasps or staples. Security fences with lockable gates shall be provided for all lift stations that are owned and maintained by Manatee County. Lift stations shall have a minimum 6 foot high concrete aggregate, stucco, brick, stone, split face concrete masonry, or chain link security fence. Chain link

security fencing shall be #9 gauge, galvanized with vinyl coating, with 1 5/8 inch top rails, 2 3/8 inch Schedule 40 line posts, 2 ½ inch Schedule 40 corner posts and 3 ½ inch Schedule 40 gate posts for swing gates. Gate posts and track line posts shall be 4 inch Schedule 40 for cantilever slide gates and roll slide gates. Maximum line posts spacing shall be 8 feet. For private lift stations, the Engineer of Record shall evaluate the location of the proposed lift station and determine whether a security fence is necessary.

1.13.13 FORCE MAIN PRESSURE TRANSMITTER AND FLOW METER

Lift stations that re-pump sewage flows (directly or indirectly) from other lift stations shall be equipped with an ultrasonic flow meter and force main pressure transducer. The flow meter shall be mounted on the force main in a water tight vault down stream from the valve vault. The flow meter shall be GE Panametrics Model AT868 Aqua Tans (for DIP or plastic pipe), or Eastech Badger Vantage Model 4400 (for plastic pipe materials only), or an approved equal. The flow meter sensors mounted on the force main shall be water proof. The meters, gauges and all connections and wiring shall be rated fully submersible. The transmitter shall be mounted next to the electrical control panel in a weather proof enclosure. The force main pressure transmitter shall be Ashcroft model T2-7-M02-42-H1-100#. The pressure transmitter shall be factory assembled with an Ashcroft model 25-312SS-02T-CD diaphragm seal filled with glycerin. The force main pressure transmitter shall be threaded into a cast billet on the outside curve of one of the 90's inside the vault. The flow meter and the force main pressure transducer shall transmit 4-20 mA signals to the telemetry system via the Analog Monitor Module mounted inside the control panel. The signal cables shall be run through 1-inch PVC conduit from the vault to the control panel.

1.13.14 EMERGENCY GENERATOR SET

A. Lift stations that re-pump sewage flows (directly or indirectly) from other lift stations or pump stations discharging through pipes 12 inches or larger shall be equipped with an on-site generator and automatic power transfer switch to start and operate the lift station and all associated equipment during power outages. Equipment shall be new, factory and field tested, installed, and ready for operation. The generator set may be either diesel or natural gas powered (per Manatee County – site specific on a case by case basis) and shall be manufactured by Kohler Co., Caterpillar, Inc., Generac, Katolight, or approved equal.

B. The generator sets supplied are to be built and sized for induction pump motors providing the loads and with the following characteristics:

   (1) NEMA LRA Code H

   (2) Started with full voltage starters-maximum allowable voltage dip at start is 20%-loading will be sequential, (i.e., after each pump is brought up to speed the next one will be started)

   (3) 240 or 480 VAC (as required)

   (4) 3 Phase

   (5) 60 HZ.

   (6) Standby Emergency Rating

   (7) Power Factor = .8

   (8) Altitude = 100 feet

   (9) Range of Ambient Temperatures = 20 - 120° F.

C. The voltage regulation of each set shall be plus or minus 0.5% of rated voltage for any constant load from the range of no load to full rated load. The frequency regulation of each set shall be accomplished through an isochronous electronic governor from the range of steady state no load to steady state full rated load.

D. The complete package, engine, generator, automatic transfer switch and other auxiliary components shall be provided by a single manufacturer/supplier except for the fuel tank. The supplier shall be the manufacturer's authorized distributor who shall maintain a service center capable of emergency maintenance and repairs with a maximum of four hours response time. The supplier shall have 24 hour/365 days per year service availability and factory trained service technicians authorized and capable to perform warranty service on all warrantable products.

E. A comprehensive, no deductible warranty shall be supplied for the complete electrical power system (the generator set, controls and associated switches, switchgear, automatic transfer switch and all accessories) supplied for each installation. The complete systems shall be warranted by the manufacturer against defects in materials and workmanship for a period of five years or 1500 hours of operation; whichever occurs first from the date of system startup. This warranty coverage shall include parts, labor, and travel expenses. The warranty of the coating of the enclosure and fuel tank shall be a non-deductible, unlimited warranty against rust and corrosion for a period of ten years.

1.13.15 A/C GENERATOR

A. Each generator shall have:

(1) A low reactance brushless generator

(2) 60 Hz Operation, 240 Volt or 460 Volt output voltage

(3) 4- Pole - 1800 RPM - Revolving Field Synchronous Machine

(4) Stator Winding to be .667 Pitch

(5) Drip Proof Enclosure (to be mounted inside the overall weather protected enclosure package)

(6) Air Cooled by Shaft Mounted Fans

(7) 12 Leads for Output Connections

(8) Class H Insulation System

(9) Temperature Rise by Resistance not to Exceed 125° C at Full Load

(10) Stator shall have vacuum impregnated windings with fungus resistant epoxy varnish.

B. Utilize a permanent magnet generator for excitation power to an automatic voltage regulator. The permanent magnet generator shall sustain main field excitation power for optimum motor starting and to sustain short circuit current for selective operation and coordination of system over current devices.

C. The automatic voltage regulator shall be a temperature compensated solid state design. It shall be equipped with 3-phase RMS sensing. The regulator shall control buildup of AC generator voltage to provide a linear rise and limit overshoot. The regulator shall include an under frequency rolloff torque-matching characteristic which shall reduce output voltage in proportion to frequency below a threshold of 58 Hz. The torque matching characteristic shall include differential rate of frequency change compensation to use maximum available engine torque and provide optimal transient load response. Regulators which use a fixed voltage per Hz. characteristic are not acceptable.

D. Provide a generator main circuit breaker. This breaker is to be set mounted and wired, molded case thermal-magnetic rated for proper generator set operation. The breaker shall be UL listed. Field circuit

breaker shall not be acceptable for the purpose of generator overcurrent protection. The generator circuit breaker shall incorporate:

(1) Tripping characteristic: designed specifically for generator protection.

(2) Trip rating is to be matched to generator rating.

Shunt Trip: Connected to trip breaker when generator set is shut down by other protective devices.

Mounting Position: Adjacent to or integrated with control and monitoring panel.

E. Provide a microprocessor-based unit that will continuously monitor current level in each phase of generator output. When signaled by the protector or other generator set protective device, a shunt-trip device in the generator disconnect switch shall open the switch to disconnect the generator from the load circuits. This microprocessor-based unit shall also:

(1) Initiate a generator overload alarm when the generator has operated at an overload equal to 110% of full load for 60 seconds.

(2) Under single or three phase fault conditions, it shall regulate the generator to 300% or rated full load current for up to 10 seconds.

(3) When the heating effect of overcurrent on the generator approaches the thermal damage point of the unit, the processor shall switch the excitation system off and open the generator disconnect switch to shut the generator down.

(4) Sense the clearing of a fault by other over current devices and control the recovery of the rated voltage to avoid overshoot.

F. All 12 of the stator winding leads shall be brought out to a single main conduit box. A plate with a connection diagram showing connections for all possible voltages of the generator shall be permanently fastened to the conduit box or its cover. No accessory devices shall be housed in this conduit box.

G. Leads for water jacket heaters and space heaters shall be housed in their own separate conduit box.

H. Provide rodent guards over any generator enclosure openings able to pass a ½" or larger sphere.

I. Provide thermostatically controlled space heater(s) of appropriate wattage and 120 volts to keep moisture out of the windings.

1.13.16 GENERATOR SET INSTRUMENTATION AND CONTROL

A. Each generator set is to be capable of being started and shutdown through an automatic transfer switch or manually.

B. Manually, the control shall have automatic remote start capability from a panel mounted three position (Stop, Run, Remote) switch. When the control panel is selected to the "Run" position, the generator set starts and runs. When selected to the "Stop" position, a shutdown is initiated. The "Remote" position allows the set to be operated from a remote location.

C. An emergency stop button will also be installed to shut the system down. This button should be a minimum of two inches in diameter, painted red, labeled "STOP" and installed in a conspicuous location on the generator set. It shall be reusable and resettable.

D. The control shall shut down and lock out upon: failing to start (overcrank), overspeed, low engine oil pressure, high engine coolant temperature, or operation of a remote manual stop station. A panel

mounted switch shall reset the engine monitor and test all the lamps. Lamp indications on the control panel shall include as a minimum:

(1) Overcrank Shutdown - Red

(2) Overspeed Shutdown - Red

(3) High Coolant Temperature - Red

(4) Low Engine Oil Pressure - Red

(5) High Engine Coolant Temperature Prealarm - Yellow

(6) Low Engine Oil Pressure Prealarm - Yellow

(7) Low Fuel - Yellow

(8) Run - Green

E. Each generator set is to be set up by the manufacturer to indicate to a remote location through the County's telemetry system:

(1) When generator set is in operation.

(2) When generator fails (no commercial or generator power).

(3) When the fuel tank is low on fuel.

The contractor shall install four wires from the generator control panel to the existing RTU control panel; wire type shall be 16 AWG, 16 strand flexing type MTW or TFFN 600 volt. The County's RTU system uses discrete- type signals with N/O type contacts. County shall make the actual connections to the RTU system.

The wire coloring scheme shall be:

Brown - generator run

Red - generator fail

Yellow- low fuel/low pressure (natural gas)

Orange- common to alarms and connected to control panel power either 24 volt DC or AC.

F. Regulation of NFPA 110 Level 2 shall apply for instrumentation, alarm and shutdown. The instrument panel shall include, but not necessarily be limited to:

(1) Gages for engine: digital or analog gages with ± 2% full scale accuracy:

a. Oil Pressure

b. Engine Coolant Temperature

c. Voltmeter for the DC Battery

(2) Gages for generator: digital or analog gages with ± 2% full scale accuracy:

a. AC Ammeter - dual range

b. AC Volt Meter - dual range

c. Frequency Meter - range of 45-65 Hz.

(3) Elapsed Time Meter

(4) 0-3000 RPM Tachometer - digital or analog gages with ± 2% full scale accuracy.

(5) A seven position phase selector switch with "OFF" position to show meter display of current and voltage of each generator phase. This selector switch may be manual or push-button.

(6) A power source with circuit protection - 12 or 24 VDC.

(7) An AC interlock to prevent starter re-engagement with engine running.

(8) DC circuit protection.

(9) A minimum of two panel lamps to illuminate instrument panel.

G. Switches and Controls

(1) Rheostat for adjusting output voltage of the generator to ± 5% of nominal voltage.

(2) Over voltage protection shutdown switch.

(3) Emergency stop switch mounted on control panel.

(4) Engine start switch - with Run, Off, Reset, Automatic positions.

(5) Five minute engine cool down timer.

(6) Cyclic cranking switch.

H. All electrical penetrations in any enclosure shall be properly sealed from the weather.

1.13.17 GENERATOR SET ENCLOSURES

A. The generator, controls and associated cooling and exhaust systems shall be housed in two separate enclosures: one for the generator set and its related devices and another for the automatic transfer switch which are to be permanently installed outdoors in suitable weather protected secured enclosures. These enclosures shall protect the generator unit and all ancillary equipment from the elements of the weather to include rain and winds . The enclosures shall be capable of withstanding 140 MPH wind loads or as defined by applicable governemental codes and regulations, whichever is greater. All enclosures, boxes, trays, etc shall have weep holes for condensation or water intrusion drainage. The enclosure shall have adequate punched-type louvers to provide all ventilation needed for cooling and operation under full load conditions. Openings shall be screened or sized to pass a sphere no larger than ½"D. There shall be no need to remove any louvers or doors on the enclosure during operation.

B. The generator enclosure shall be constructed of at least 14 gauge steel or aluminum or an approved material of similar strength and durability. The enclosure (if metal) shall have an electrostatically applied, baked on, powder coated enamel finish 1.5 to 2.5 mil. This coating shall have a non-deductible, unlimited warranty against rust and corrosion for a period of ten years. The color of the powder coating shall be either a "buff" color, similar to the standard color used by Generac on their residential emergency generators or or Pantone Green 5545, and must be approved by Manatee County prior to installation of the product.

C. The side panels shall be easy to remove to allow access to all areas of the generator.

D. The housing shall have hinged side access doors and a rear control door. All doors shall be provided with padlock hasps so that the County can install their standard padlocks. All handles, hinges, hasps, and all mounting bolts and screws shall be 316 stainless steel and tamper-proof.

E. The housing shall be factory assembled to the generator set skid base. The skid base shall be firmly fastened to a concrete housekeeping slab foundation.

F. The engine and generator shall be removable from the base for maintenance purposes.

G. The housing shall provide adequate air flow for generator set operation.

H. The skid is to have adequate strength and rigidity to maintain alignment of mounted components without depending on the concrete foundation. The skid is to be free of sharp edges and corners. All steel surfaces to come in contact with exposed concrete or masonry shall receive a protective coating of an approved heavy bitumastic troweling mastic prior to installation, or provide a 1/32-inch thick full width neoprene gasket between the steel surface and the concrete or masonry.

I. Lifting attachments shall be arranged to facilitate lifting with slings without damaging any components. Inscribe on a metal plate that is permanently attached to the skid, a diagram which indicates the location and lifting capacities of each lifting attachment.

J. The base shall incorporate a battery tray with battery hold down clamps within the rails. Provisions for stub up of electrical conduits shall be within the footprint of the set. Vibration isolation shall be integral between the generator set and base.

K. The enclosure shall be a low noise or sound attenuated enclosure. The noise level at any load operating condition, in any direction from the enclosure, shall not exceed 75 dBA at a distance of five (5) meters from the enclosure or as dictated by Manatee County ordinance for the particular area the generator is installed, whichever dBA value is less.

1.13.18 GENERATOR ENGINE

A. The engine shall be a 4-cycle, suitable for 1800 RPM continuous operation, direct injection diesel or natural gas, with forged steel crankshaft and connecting rods . The engine is to be of sufficient horsepower to drive the generator under full load conditions. It shall be designed for stationary applications and shall be complete with all necessary auxiliaries needed for operation of the AC generator. The engine block shall be cast iron construction. Each bank of cylinders shall have a minimum of one coolant drain port that is easily accessible for maintenance purposes.

B. The engine shall be cooled by a closed loop radiator system rated for full load operation in a 50° C ambient. See the Cooling System section for further details.

C. The engine shall have an electronic governor which shall provide isochronous frequency regulation. The governor shall have provision for paralleling with the addition of load sharing controls.

D. The engine shall have an electric starter and battery(ies) capable of three complete cranking cycles without overheating . See the Starting System section for further details.

E. The engine shall have a mechanical, positive displacement, engine driven, lubrication oil pump. Provide full flow lubrication oil filters with replacement spin-on canister elements. Provide a dipstick for oil level indication and an easily accessible fill location.

F. Supply a fuel/water separator and filter if diesel fueled. See the Fuel System section for further details.

G. Supply a replaceable dry element air cleaner with restriction indicator.

H. Provide an engine mounted thermostatically controlled water jacket heater. The heater(s) wattage size shall be determined by the manufacturer. The heater voltage shall be single phase, 120V, 60HZ.

1.13.19 GENERATOR ENGINE STARTING SYSTEM

A. The battery(ies) used for cranking the generator shall be the lead acid type, 12 or 24 volt, sized as recommended by the generator manufacturer. The battery(ies) shall have sufficient capacity to crank the engine for at least three cycles of 15 seconds on - 15 seconds off, for a total of 75 seconds. They shall be provided as new with the entire manufacturer's warranty.

B. The battery(ies) shall be fastened securely in its(their) own tray within the foot print of the skid. The tray shall be acid resistant.

C. The battery(ies) shall be thermally insulated from the engine compartment

D. The battery cabling is to be provided by the manufacturer.

E. Include all interconnecting conductors and connection accessories.

F. A battery charger of appropriate rating which is voltage regulated, shall be provided for the generator set. It shall be sized for the proper current, input AC voltage and output DC voltage. The charger shall be equipped with float, taper and equalize charge settings.

G. A meter on the charger shall provide a visual output reading of the charger.

H. On the engine, provide a factory mounted alternator with solid state voltage regulation and 35 Amp minimum continuous rating.

1.13.20 GENERATOR DIESEL ENGINE FUEL SUPPLY SYSTEM

A. Provide a double walled fuel tank, made of heavy gauge construction that is designed for full weather exposure. Depending on the site, the tank may either be the stand-alone or sub-base type. There is to be visual tank to foundation clearance. The tank is to have the following features:

(1) UL listed - based on the design of the tank included in the bid, the supplier will determine which applicable UL listing applies and adhere to its specifications. The tank will be constructed in compliance with all governmental agencies that have jurisdiction in the area where the generator will be installed

(2) The capacity of the fuel tank shall be sufficient to run the generator continuously for 96 hours at 75% load up to a maximum of 540 gallons.

(3) Equipped with a mechanical fuel gage and low fuel level alarm that may be monitored from a remote location by a RTU which uses N/O type contacts.

(4) Two inch NPT fuel opening with spill protection and a lockable lid which is easily accessible.

(5) Emergency pressure relief vent opening on the inner and outer tanks.

(6) Inner tank leak alarm kit that may be monitored in some remote location by an RTU.

(7) Basin drain.

(8) Overfill protection

(9) Provide an integral fuel pump of sufficient capacity to sufficiently charge the fuel lines under any start or run condition.

(10) The exterior coating shall match the generator enclosure in all respects.

B. The overall fuel system is to comply with all applicable NFPA regulations as well as those required by the Florida Department of Environmental Regulation. This includes NFPA compliant labels for the fuel shut-off location and application of Diesel HAZMAT symbol stickers.

C. Provide an anti-siphon valve in the fuel line at the output of the tank.

D. A fuel filter shall be installed between the fuel tank and fuel inlet to the engine. It shall have a fuel water separator. The filter element shall be disposable and be easily removed and installed for maintenance purposes.

E. Provide supply and return fuel lines of sufficient diameter for all load requirements, flexibility for maximum resistance to fatigue due to component operation and made of material which has maximum resistance to corrosion due to environment and fuel supply.

F. The skid base for the fuel tank shall be firmly fastened to a concrete foundation. The fuel tank & skid assembly shall be removable from the base. Lifting points shall be provided for the tank skid. All steel surfaces to come in contact with exposed concrete or masonry shall receive a protective coating of an approved heavy bitumastic troweling mastic prior to installation, or provide a 1/32-inch thick full width neoprene gasket between the steel surface and the concrete or masonry.

1.13.21 GENERATOR ENGINE COOLING SYSTEM

A. The engine shall be cooled by a unit mounted closed loop radiator system rated for full load operation in 50o C ambient condition with the ambient temperature as measured at the air inlet to the radiator. Radiator shall be provided with a duct adapter flange. The cooling system shall use a 50/50 (Prestone, Xerex or equivalent coolant and water) mixture provided by the supplier.

B. Provide drain cocks or plugs in the engine block and radiator for easy changing and flushing of the coolant. Provide coolant drain extensions where necessary for easy access to the drainage device.

C. Protection from rotating parts (fan, fan belt) shall be provided.

D. Install a self contained thermostat module to automatically regulate coolant flow to maintain optimum constant coolant temperature as recommended by the engine manufacturer.

E. Provide a coolant heater which is thermostatically controlled in the jacket of the engine.

1.13.22 GENERATOR ENGINE EXHAUST SYSTEM

A. The muffler shall be the critical grade made from aluminized steel of thickness and design as recommended by the manufacturer. The muffler shall be housed within the generator enclosure.

B. All exhaust piping shall be aluminized steel. Vertical discharge exhaust shall be equipped with a rain cap, appropriate condensation drains in the piping, and the outlet, and shall be designed so no external rain or moisture may enter the engine from the outside even if the rain cap fails. Care must be exercised so there is no recirculation of exhaust gases into the intake system.

C. The connection of the engine to the exhaust system shall be a flexible section of corrugated stainless steel pipe. The connection of the exhaust pipe to the muffler shall be a stainless steel expansion joint with liners

D. The exhaust emissions shall fall within the guidelines of the EPA and other state and governmental agencies.

1.13.23 AUTOMATIC TRANSFER SWITCH

A. Supply an automatic transfer switch with built-in control logic monitors to sense any interruption in the utility supplied power. When the power fails, the automatic transfer switch starts the engine and transfers the load after the generator has reached proper voltage and frequency. When the utility power has been restored to the proper voltage and frequency, the automatic transfer switch will switch the load back to the utility source and after a time delay to sufficiently cool down the generator, shut down the engine. The utility power service size shall be verified by the Contractor and shall be factored in when determining the size of the automatic transfer switch.

B. The automatic transfer switch shall be in a separate rack-mounted NEMA 4X SS secure (double door) enclosure with a rain shield. The enclosure shall be capable of withstanding winds to 140 MPH or the required wind withstanding protection as defined by applicable governmental codes and regulations in the area, whichever wind rating is greater.

C. The transfer switch shall meet or exceed the following standards for emergency standby power system automatic transfer switches:

(1) UL 1008

(2) NFPA 110

(3) NEC - articles 700 thru 702

(4) NEMA 1 CS-2-447

D. The automatic transfer switch is to have the following features:

(1) Unit may or may not have a bypass switch, it is a County decision on a case-by-case basis: if so, it shall have a rating equal to the automatic transfer switch.

(2) Suitable for emergency and standby applications on all classes of load.

(3) Adjustable normal source voltage sensing for pickup and dropout. The voltage is to be monitored line to line for all three phases of the switch.

(4) The normal source voltage sensing is to be adjustable from a minimum of 70%-90% of nominal voltage for drop out and a minimum of 75%-100% for pickup.

(5) There shall be a single phase sensing of the emergency source. It shall have an adjustable pickup setting of a minimum of 70% to 100% of nominal voltage.

E. There shall be time delays activated in the automatic transfer switch as follows:

(1) Provide an adjustable time delay to override momentary normal source outages. If the utility provided power does not correct itself to a nominal range of values for voltage and frequency before the time on the relay expires, then all applicable transfer and engine starting signals will be activated. If the power goes back into specification, then no transfer will take place.

a. Upon losing commercial power:

i. 30 seconds for time delay start

ii. 2 minutes to neutral transfer

iii. 1 minute from neutral to emergency power

b. After commercial power is restored:

i. 10 minutes to neutral transfer

ii. 1 minute from neutral to utility

(2) Provide an adjustable time delay for transferring the load to emergency power.

(3) Provide an adjustable time delay for retransferring back to the utility power from emergency power.

(4) Provide a non-adjustable (five minute minimum) unloaded running time for cool down of the generator after the power has switched back to the utility supply mode.

(5) Provide a time delay to absorb momentary voltage and frequency spikes or dips during initial genset loading.

F. The automatic transfer switch shall be a 3-pole switch.

G. The automatic transfer switch is to have a disconnect switch which will prevent transfer.

H. The automatic transfer switch shall have in phase transfer control logic which will initiate an in phase transfer of motor loads between line sources. This logic shall help prevent nuisance tripping of distribution circuit breakers and damage to mechanical loads resulting from out of phase power transfer.

I. The automatic transfer switch is to be designed to be completely front accessible.

J. The automatic transfer switch is to have true double throw operation. This is accomplished through a single solenoid design which inherently interlocks and prevents contacts from stopping between sources or from being in contact with both sources during any given time period.

K. The automatic transfer switch shall have a solid neutral connection with full rated terminal lugs for normal, emergency and load.

L. The automatic transfer switch shall be equipped with a ground stud for the installation of customer provided ground terminations.

M. The automatic transfer switch shall have, as a minimum, the following equipment for the control panel:

(1) Microprocessor based electrical controls with circuitry protected against EMI, voltage transients, ESD, shock vibration, and other hostile environments.

(2) Analog or digital Kilowatt meter, frequency meter, AC voltmeter and ammeter.

(3) Reset switch.

(4) Emergency stop switch

(5) LCD display, touch key pad, and LED indicators for user access to system information and settings. Provide a green light for when normal source is in operation and red light when generator is operating.

(6) Generator set programmable exerciser control.

(7) Test pushbutton to simulate a normal power source failure.

(8) Provision for optional interface with a P.C.

N. The automatic transfer switch shall have a surge suppressor which provides protection from transient voltage surges produced by lightning and other sources. The surge suppressors are to be composed of an array of matched metal oxide varistors with sufficient capacity to protect the transfer switch. It is to be connected to the normal power source terminals and installed at the factory.

O. The automatic transfer switch electronic components shall be protected from vibration and damage due to rough handling during shipment. If shipped pre-assembled or pre-mounted to the cabinet, ensure adequate connection strength.

1.13.24 GENERATOR SET SPARE PARTS

A. The spare parts shall include, but not necessarily be limited to the following:

(1) (6) Fuses of each type and size used.

(2) (6) Pilot lamps for each type used.

(3) (3) Green lens caps for pilot lamps.

(4) (3) Red lens caps for pilot lamps.

(5) (3) Amber lens caps for pilot lamps.

(6) (1) Oil, air and fuel filter.

(7) (1) Of each special tool or device, if any, required to maintain the generator set and included equipment.

1.13.25 GENERATOR SET HOUSEKEEPING SLAB FOUNDATION

The steel reinforced concrete foundation for the generator and fuel tankare to be suitable to fully support, under all load conditions, and with a reasonable safety factor. These steel reinforced concrete foundations shall be designed by a Professional Engineer licensed in the State of Florida. Signed and sealed drawings shall be provided to Manatee County. The top of the concrete foundation shall be a minimum of two inches above the surrounding grade level.

1.13.26 GENERATOR SET FIELD QUALITY CONTROL

A factory authorized service representative of the product supplied, shall inspect all field assembled and installed components and make any necessary corrections to insure proper equipment operation. Any cost associated with this procedure shall be born by the Contractor.

1.13.27 GENERATOR SET TRAINING AND DEMONSTRATION

A. A factory representative of the product shall provide the County's maintenance personnel with a thorough period of instruction and hands-on session regarding the operation, trouble shooting and maintenance of all components of the product. Typical training period: one hour.

B. At least seven business days of notice shall be given by the Contractor to the County for delivery, installation, testing, training and demonstration of the product.

END OF SECTION

SECTION 1.14 RECORD DRAWINGS

1.14.1 GENERAL

When construction is complete, record drawings, indicating the locations and elevations of the improvements that have been built, shall be provided to Manatee County Public Works Department. The record drawings shall be a special revision of the approved construction drawings, and shall reflect all of the below requirements in content.

1.14.2 REQUIREMENTS AS TO FORM

A. Every set of record drawings shall have a cover sheet with a vicinity map, which shows where the project is located, and a key map, which shows where each sheet in the record drawing set is located inside the project boundaries.

B. Each sheet of the record drawings shall have the title "RECORD DRAWING" printed on it in large, bold lettering, near the title block. Each sheet shall also have the words "COUNTY MAINTAINED - WATER", "- SEWER" or "- WATER AND SEWER", or "PRIVATELY MAINTAINED - WATER", "- SEWER", or "- WATER AND SEWER" in large, bold lettering, near the title block, depending on which entity will be responsible for maintaining the utilities. If the project includes a new reclaimed water system, each sheet shall also have the words "COUNTY MAINTAINED - RECLAIMED WATER", or "PRIVATELY MAINTAINED - RECLAIMED WATER", in large, bold lettering, near the title block, depending on which entity will be responsible for maintaining the utilities.

C. Record drawing information submitted in tabular form shall not be accepted. Record information notes shall be positioned individually on the drawings near the depictions of the item to which each note corresponds.

D. Record information notes shall be bold or italics to identify them as record information.

E. Record drawings shall have a revision note such as "Record Drawing" in the revision block and a date corresponding to the date the record drawing was issued.

F. Record information shall be presented in a clear and comprehensible form.

G. The drawing scales used in the record drawings shall be the same as were used in the construction drawings, and the sheet number of each record drawing sheet shall be the same as the sheet numbers that were used on the construction drawings from which the record drawings originate. If additional sheets need to be added shall be numbered with a letter following the preceding sheet number: a sheet added between sheet 4 and 5 would be labeled 4a.

H. All sheets that were used to depict locations and elevations of utility structures in the construction drawings shall be included in the record drawing set.

I. Record drawings shall accurately depict all existing improvements lying within the immediate vicinity of the constructed utilities. Existing improvements shall include, but not be limited to: sidewalks, walls, fences, road surfaces, buildings, and other utilities. Immediate vicinity includes areas within utility easements and areas within rights of way, and also includes areas within 15 feet of potable water mains, reclaimed water mains, sanitary force mains, and gravity sewer mains. Immediate vicinity also includes areas within 10 feet of potable water meters, reclaimed water meters, backflow preventers, and fire hydrants. Private irrigation mains that are not located within the rights of way shall also be located on the record drawings. Rights of way, easements, and property corners shall be shown and shall be of sufficient detail as to determine if the constructed utilities are within the easements or rights of way. A reference

to the recording document (O.R. Book or Plat Book and Page) shall be included with any depiction of a right-of-way or easement. O.R. Book or Plat Book and Page are not required to be shown on the record drawings of a project for proposed rights of way or proposed easements that will be identified on the proposed final plat for the said project.

J. Each roadway depicted on the drawings shall have the correct roadway name noted on it. Provisional roadway names, such as "Street A", shall not be allowed on the record drawings. Each new lot of a new subdivision shall have its street address number noted on the record drawings.

K. Horizontal locations required for valves, fittings, services, and other utility structures shall be to the center of each installation. Top of ground or pavement elevations required along pipelines shall be reported to the nearest 0.1 feet. Top of pipe elevations shall be to the nearest 0.1 feet. Elevations of manhole rims and manhole pipe inverts shall be reported to the nearest 0.01 feet. Horizontal locations of all features shall be reported to the nearest 0.1 feet.

L. Computer drawing files submitted shall be AutoCAD® 2004 or later release date versions. All reference files required to recreate the signed and sealed record drawings shall be included in the submitted digital files. Computer drawing files format shall be DWG only and shall be Windows NT or Windows 2000 or Windows XP compatible.

1.14.3 MONUMENTATION

A. Record information shall be referenced by station and offset to a monumented baseline. The monumentation for the baseline shall be shown or described on the record drawing (i.e. iron rod & cap, nail & disk or other durable and identifiable monument). For each baseline, there shall be at least two monuments described and referenced. State Plane Coordinates for the monuments shall be shown in NAD 83 (99 adjustment) in feet. Developments not within existing or proposed subdivisions and not within 1.5 miles from existing Manatee County Primary Control Points or platted State Plane Coordinates may be exempted from the requirement for monuments to be based on State Plane Coordinates.

B. The alignment of the baseline shall be along the centerline or edge of one of the following: an existing paved road, recorded right-of-way, recorded easement, face of an existing building, existing sidewalk or other existing, identifiable reference line. Offsets from the baseline shall not exceed 150 feet. All elevations shown on record drawings shall be referenced to a minimum of two described bench marks. A minimum of two on-site bench marks shall be described including datum. All bench marks shall be based upon NGVD29 and NAVD88. However, all record drawings shall be in NAVD88.

C. All locations and elevations shall be field located by or under the direct supervision of a Florida Licensed Surveyor and Mapper.

1.14.4 CERTIFICATIONS

A. Record Drawings shall be certified by a Florida Licensed Surveyor and Mapper. The certification shall state that the Record Locations and Elevations depicted on the Record Drawing are true and correct and were collected in the field by the Surveyor and Mapper or by a representative under the direct supervision of the Surveyor and Mapper.

B. Record Drawings shall be certified by the Engineer-of-Record. The certification must state that the improvements have been constructed in substantial conformance with the approved plans.

C. All visible record features, including sewer inverts, must be measured and located by the Surveyor or by personnel under his or her direct supervision. The certifying Surveyor shall be fully responsible for the

accuracy of the record locations and elevations shown on the record drawings. However, the Surveyor may include statements on the record drawings indicating the following:

(1) With the exception of the beginning, ending and the surface locations of the Horizontal Directional Drilling (HDD) log readings, the Horizontal Directional Drilling (HDD) locations and elevations provided by the HDD Contractor have not been field verified.

(2) Station and offset of pipe fittings are based on PVC pipe markers or 2" x 4" markers inserted by the Contractor on the top of pipe fittings.

(3) Station, offset, and elevation of potable water mains, reclaimed water mains, and sanitary force mains are based on PVC pipe markers or 2" x 4" markers inserted by the Contractor on the top of pipe.

1.14.5 RECORD INFORMATION

A. Water distribution utility systems, reclaimed water (or irrigation) utility systems, and sanitary sewer collection utility systems shall be located and the locations shall be depicted and noted on the record drawings by station and offset from an established baseline, and by elevation relative to established benchmarks. For "single point" installations, swing ties rather than station and offset may be allowed.

(1) Elements of the utility systems that shall be located and noted by station and offset:

a. valves (center of lid),

b. all fittings (other than sanitary sewer service wyes and water or reclaimed water saddles),

c. water services (center of meter or meter box),

d. reclaimed water (or irrigation) services (center of meter or meter box) ,

e. other miscellaneous utility structures with features at or above the surface of the ground.

(2) Elements of the utility systems that shall be located and noted by station, offset and elevation:

a. center of sanitary sewer manhole covers (top of rim for elevations),

b. center of lift stations (top of slab for elevations),

c. center of valve vaults (top of slab for elevation),

d. top of pipe on potable water mains, reclaimed water mains and sanitary force mains at intervals no greater than 200 feet apart for open cut, no greater than 25 feet apart for HDD, the beginning and ending of all jack-and-bores, and at locations where there is a substantial grade change,

e. center of sanitary sewer service clean-out cover (invert of 45° wye that is located directly below the clean-out cover for elevation),

f. center of fire hydrants, (center of 5-inch Storz connection nozzle for elevation).

(3) At locations where a top-of-pipe elevation is required for pipeline, a top-of-ground or top-of-pavement elevation shall also be measured and noted on the drawings.

(4) Elements of the utility systems that shall be located and noted by elevation only: sanitary sewer manhole inverts of individual sewer pipes where they enter and exit the manhole.

B. On record drawings, at locations where the horizontal positions of constructed pipelines or other utility structures deviate by more than 5 feet (as scaled on the drawing) from the horizontal positions that were shown on the construction drawings, the actual positions of the pipelines or structures shall be measured and they shall be depicted in their actual positions on the record drawings.

C. Record information shall include:

(1) A thorough description of the pipes that have been installed, including type of pipe material or casing, size, class, diameter ratio, and other basic information.

(2) The recalculated slopes of gravity sewer mains, based on the record survey of manhole inverts and lengths of pipes.

(3) Notation in bold near the title block of each sheet indicating the tracer wire was installed, successfully tested, and the outcome.

D. For new valves, the manufacture type (as in gate, plug or butterfly), size (pipe nominal diameter) and make (manufacturer) of each valve shall be noted on the record drawings.

E. Lift station control and equipment elevations that were shown on the original construction drawing lift station detail sheet shall be measured and the record survey elevations shall be shown on the record drawing revision of the detail sheet. Record pump information, including pump make, model, year of manufacture, serial number, impeller diameter, voltage, horse power and speed, shall be shown on the record drawing revision of the lift station detail sheet.

F. Horizontal Directional Drilling (HDD) and Jack-and-Bore locations and elevations shall be shown on the Record Drawing. The Surveyor shall locate the beginning, ending and the surface locations of the driller's log readings, and the locations shall be indicated on the record drawings. The HDD Contractor shall provide a certified report and bore log indicating the horizontal and vertical location at least every 25 linear feet along the pipe. The information provided by the HDD Contractor shall be depicted on the Record Drawing and identified as having been provided by the HDD Contractor.

G. Abandoned infrastructure shall also be depicted as record information and noted as "abandoned".

1.14.6 SUBMITTALS

A. Record drawing submittal materials shall be attached to a transmittal letter, which shall list the following information:

(1) Submittal date.

(2) Project Title.

(3) Planning Department Final Site Plan number (if applicable).

(4) Title and sheet number of each record drawing sheet submitted.

B. The following materials shall be submitted for review and approval:

(1) Transmittal letter,

(2) Two signed, dated and sealed sets of the record drawings,

(3) Final plats and/or easements when applicable,

(4) Final breakdown of construction quantities and final costs when applicable,

(5) Performance bond, defect security bond, warranties and associated cost estimates when applicable,

(6) A copy of the bacteriological test results,

(7) A copy of all of the infrastructure inspection reports, and

(8) Up to four copies each of the water and wastewater Completion of Construction forms, fully signed, sealed and dated by the owner and engineer, of which one of each will be retained for the County's records.

C. Once the record drawings have been reviewed and all corrections have been made, notification will be given to the engineer to make the final submittal, which shall consist of the following materials:

(1) Transmittal letter,

(2) One set original Mylar record drawings,

(3) One copy of the record drawings plan set, signed, dated and sealed by the Engineer of Record,

(4) One copy of the record drawings plan set in CAD and PDF on a DVD or CD.

(5) Additional information such as SUE locations and findings, if previously done and readily available.

END OF SECTION

MANATEE COUNTY PUBLIC WORKS UTILITY STANDARDS

MAY 2011

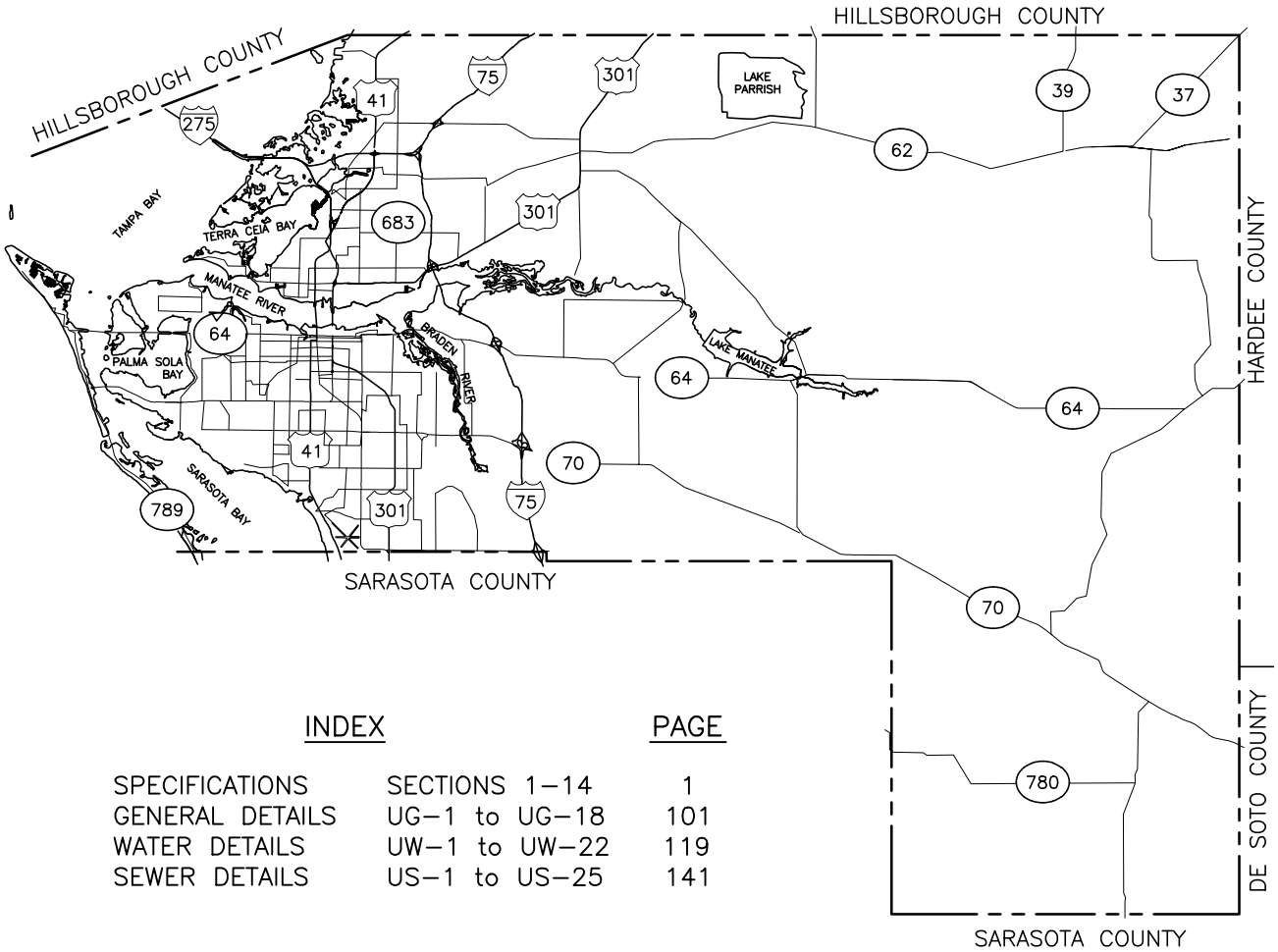

TABLE OF CONTENTS

UTILITY STANDARDS–GENERAL CONSTRUCTION

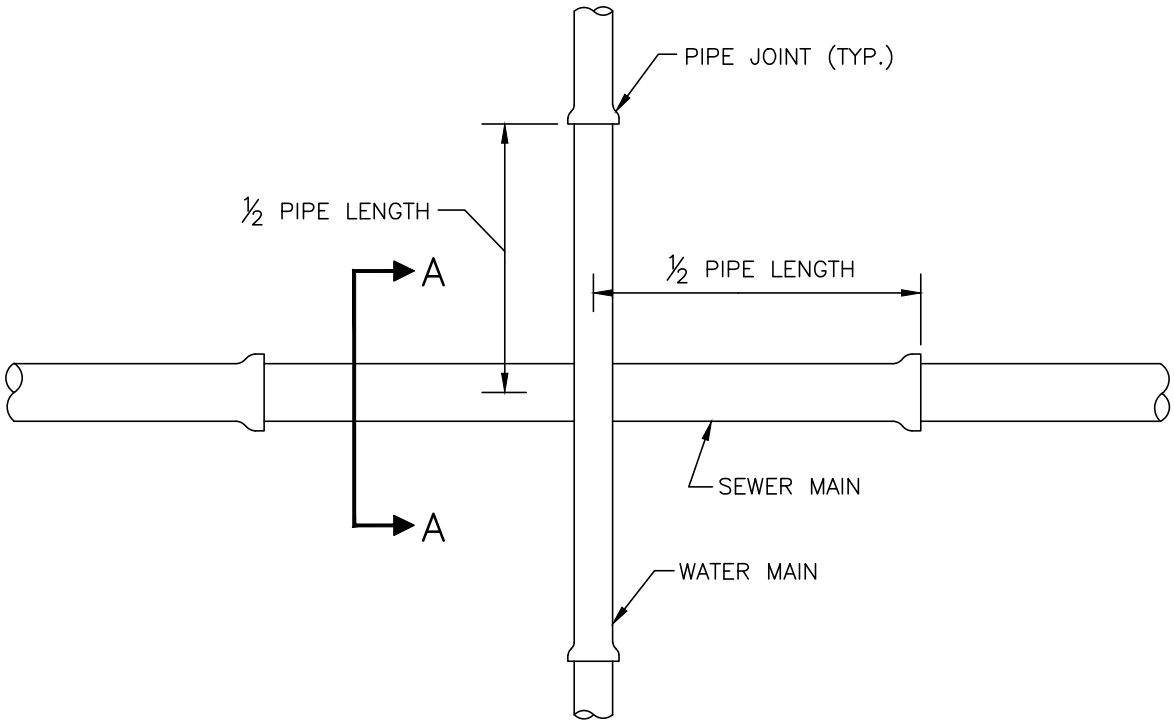

PLAN VIEW

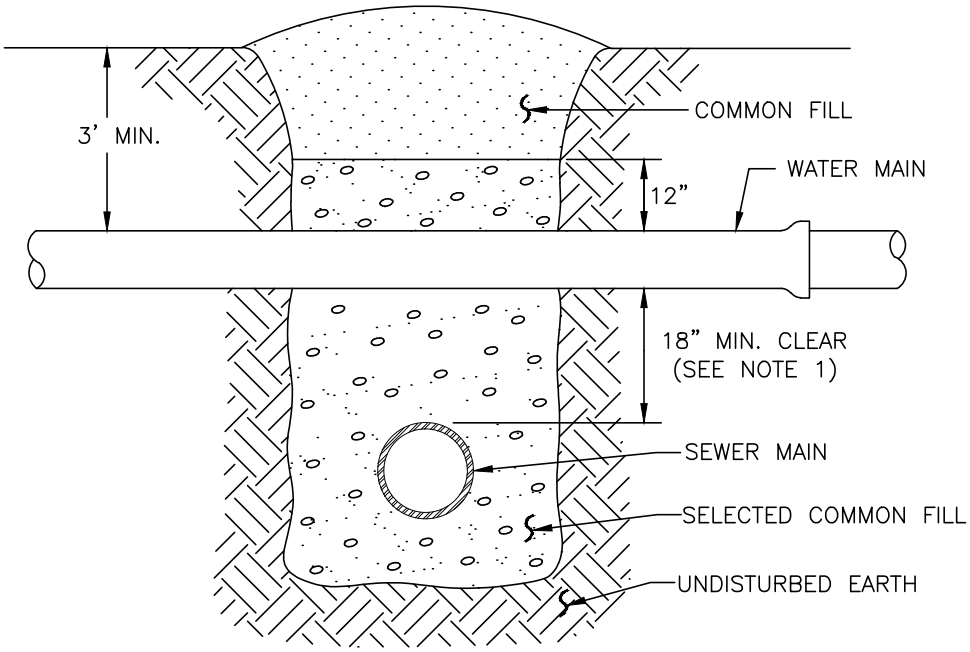

SECTION A–A

NOTES:

1. CLEARANCE MAY BE REDUCED TO 6" FOR GRAVITY SEWER WHERE WATER MAIN IS DUCTILE IRON OR 3" FOR FORCE MAIN WHERE FORCE MAIN IS ENCASED A MINIMUM OF 10' EACH SIDE OF CROSSING.
2. WHERE NO ENCASEMENT IS REQUIRED, PIPE SECTIONS SHALL BE FULL–LENGTH AND SHALL BE ADJUSTED HORIZONTALLY SO THAT THE CROSSING IS AT EACH PIPE SECTION'S MIDPOINT REGARDLESS OF THE VERTICAL CLEARANCE.
3. REFER TO THE JACK & BORE CROSSING DETAIL FOR CASING AND SPACER REQUIREMENTS.

MANATEE COUNTY PUBLIC WORKS DEPARTMENT			TYPICAL NEW WATER & SEWER LINE CROSSING	UG–2
REV.BY	DATE			
CLB/BR	11/10	MAY 10, 2011 DATE OF APPROVAL		PAGE 102

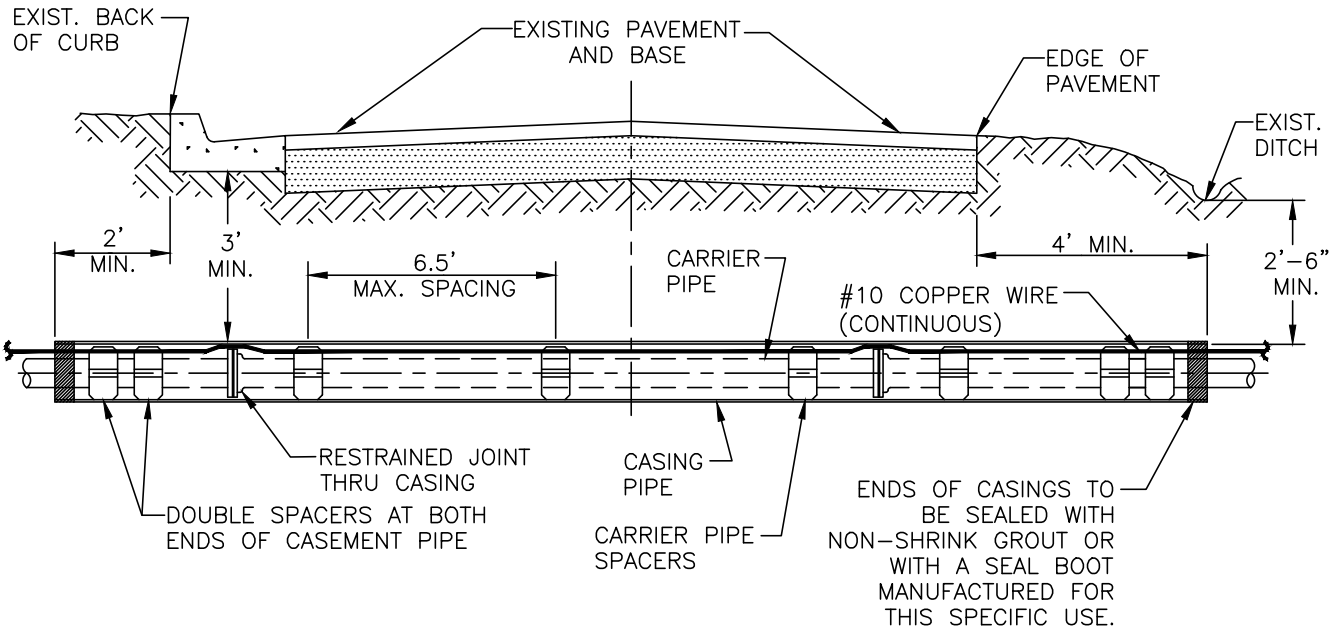

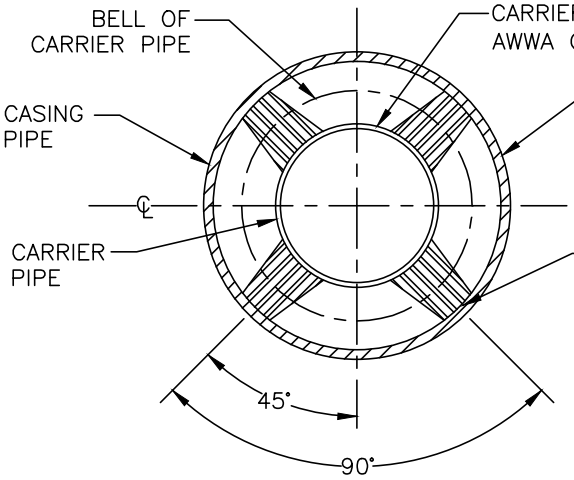

CARRIER PIPE TO BE DUCTILE IRON CLASS 350 OR AWWA C-900 PVC CLASS 235 (DR-18) AS REQUIRED.

STEEL CASING PIPE JOINTS SHALL BE MADE BY USING A FULL CIRCUMFERENCE COMPLETE PENETRATION GROOVE WELD. STEEL MATERIAL SHALL MEET OR EXCEED ASTM A139 GRADE B. PIPE SHALL BE STRAIGHT SEAM PIPE OR SEAMLESS PIPE.

CARRIER PIPE SPACERS: 304 STAINLESS STEEL BAND CASING INSULATORS AS MANUFACTURED BY ADVANCE PRODUCTS & SYSTEMS INC. AND PIPELINE SEAL & INSULATOR INC. OR PLASTIC (HDPE) SPACERS AS MANUFACTURED BY RACI OR APPROVED EQUAL BY MANATEE COUNTY.

CARRIER SIZE & MINIMUM CASING SIZE									
CARRIER	4"	6"	8"	10"	12"	14"	16"	18"	20"
CASING	12"	14"	18"	20"	24"	30"	30"	36"	36"
CASING / WALL THICKNESS	0.188	0.188	0.250	0.250	0.344	0.406	0.406	0.406	0.406

NOTES:

1. THE ENGINEER OF RECORD MAY SELECT LARGER CASING DIAMETERS.
2. FOR JACK & BORE SPECIFICATIONS UNDER STATE ROADS AND RAILROADS REFER TO THE F.D.O.T. UTILITY ACCOMMODATION MANUAL, LATEST EDITION.

MANATEE COUNTY
PUBLIC WORKS DEPARTMENT

REV.BY	DATE
CLB/BR	11/10

MAY 10, 2011
DATE OF APPROVAL

JACK & BORE CROSSING

UG-3

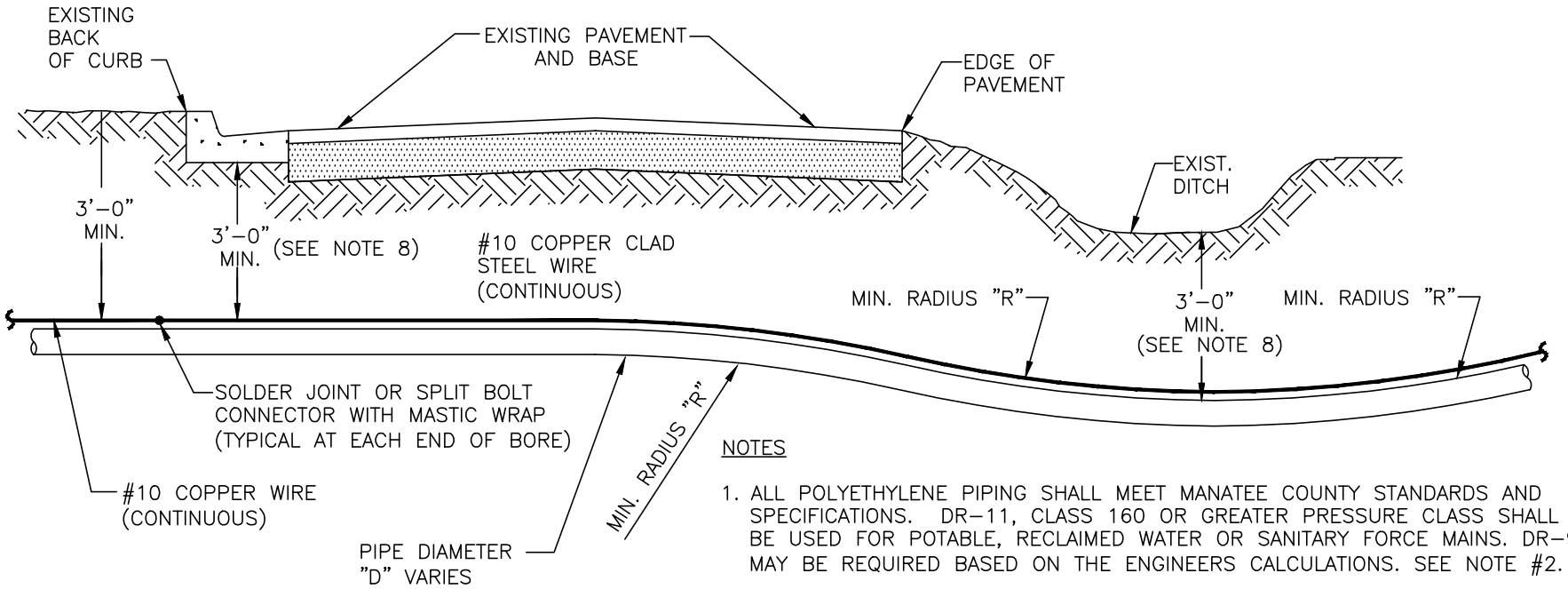

	MIN. RADIUS FOR PE PIPE IN FEET	
PIPE DIAMETER "D" IN INCHES	MIN. RADIUS "R" FOR DR-11	MIN. RADIUS "R" FOR DR-9
2	4	5.5
3	6	8.3
4	8	11.0
6	12	16.5
8	16	22.0
10	20	27.5
12	24	33.0
16	32	44.0
18	36	49.5
20	40	55.0

NOTES

1. ALL POLYETHYLENE PIPING SHALL MEET MANATEE COUNTY STANDARDS AND SPECIFICATIONS. DR-11, CLASS 160 OR GREATER PRESSURE CLASS SHALL BE USED FOR POTABLE, RECLAIMED WATER OR SANITARY FORCE MAINS. DR-9 MAY BE REQUIRED BASED ON THE ENGINEERS CALCULATIONS. SEE NOTE #2.
2. THE ENGINEER SHALL SUBMIT CALCULATIONS FOR THE MAXIMUM PULLING LENGTH, TOTAL PULL FORCE AND THE ALLOWABLE TENSILE LOAD, IN ACCORDANCE WITH AWWA M55 & ASTM F1804. DESIGN SHALL ALSO BE IN ACCORDANCE WITH ASTM F1962.
3. THE PIPE STRING SHALL BE ATTACHED TO THE BACKREAMER THROUGH A "WEAK-LINK" DEVICE TO ENSURE THAT THE PULLING FORCE DOES NOT EXCEED THE PIPE'S ALLOWABLE TENSILE LOAD RATING.
4. ONE # 10 GAUGE EXTRA HIGH STRENGTH COPPER CLAD STEEL TRACER WIRE SHALL BE PULLED AND SECURED TO THE PIPE FOR PIPELINES THAT ARE INSTALLED BY TRENCHLESS HORIZONTAL DIRECTIONAL DRILLING METHOD. IN TRENCHLESS/NON-DIRECTIONAL BORE APPLICATIONS, A # 10 GAUGE SOLID INSULATED COPPER WIRE SHALL BE ATTACHED TO THE PIPE. TRACER WIRES SHALL HAVE A MINIMUM 30-MILS OF POLYETHYLENE INSULATION.
5. COLOR CODED BLUE FOR POTABLE WATER MAINS.
6. COLOR CODED PURPLE (PANTONE 522 C) FOR RECLAIMED WATER MAINS.
7. COLOR CODED GREEN FOR SANITARY FORCE MAINS.
8. PIPE DEPTHS MAY NEED TO BE DEEPER TO AVOID FRACKOUTS. PIPEALIGNMENT SHALL BE AS SHOWN ON THE CONSTRUCTION DRAWINGS.
9. FDOT CRITERIA SHALL BE MET FOR PIPES UNDER STATE ROADS.

REV.BY	DATE
CLB/BR	11/10

MANATEE COUNTY
PUBLIC WORKS DEPARTMENT

MAY 10, 2011
DATE OF APPROVAL

DIRECTIONAL BORE ROADWAY CROSSING

UG-4

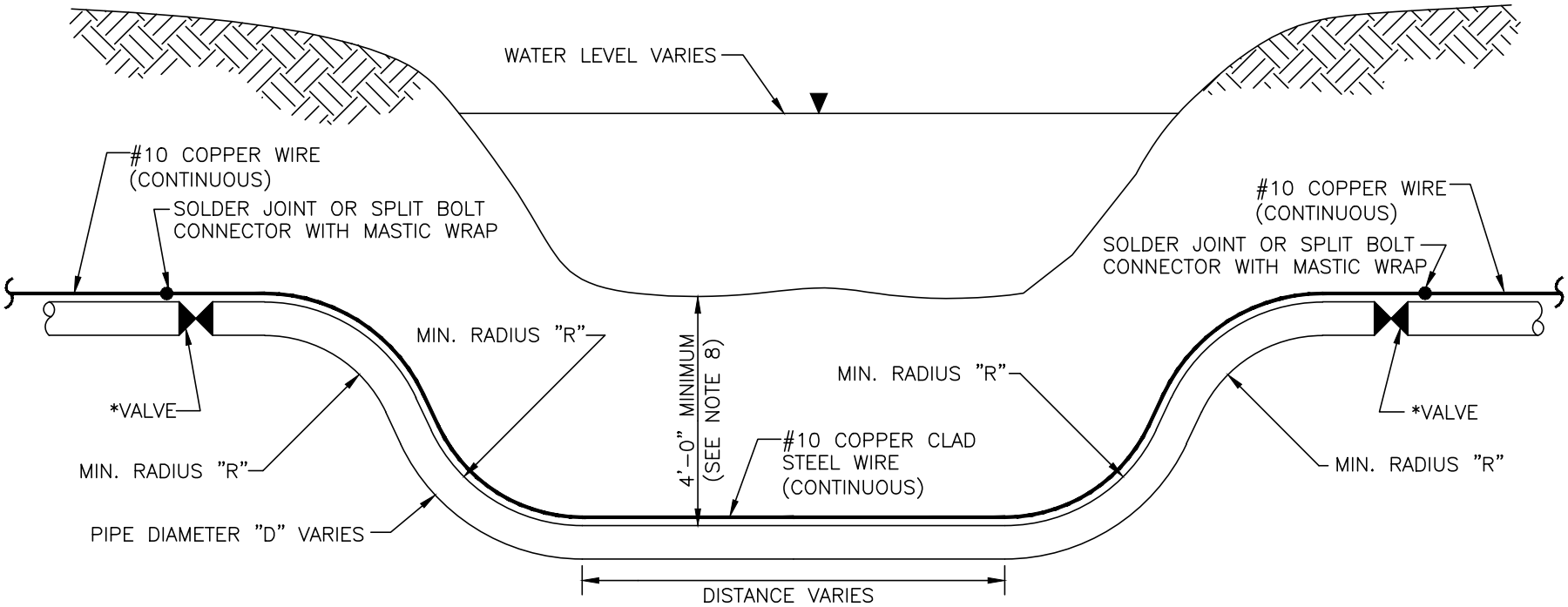

*NOTES:

1. FOR SANITARY FORCE MAIN USE PLUG VALVE.
2. FOR POTABLE AND RECLAIMED WATER USE GATE VALVE OR BUTTERFLY VALVE.

	MIN. RADIUS FOR PE PIPE IN FEET	
PIPE DIAMETER "D" IN INCHES	MIN. RADIUS "R" FOR DR-11	MIN. RADIUS "R" FOR DR-9
2	4	5.5
3	6	8.3
4	8	11.0
6	12	16.5
8	16	22.0
10	20	27.5
12	24	33.0
16	32	44.0
18	36	49.5
20	40	55.0

NOTES:

1. ALL POLYETHYLENE PIPING SHALL MEET MANATEE COUNTY STANDARDS AND SPECIFICATIONS. DR-11, CLASS 160 OR GREATER PRESSURE CLASS SHALL BE USED FOR POTABLE, RECLAIMED WATER OR SANITARY FORCE MAINS. DR-9 MAY BE REQUIRED BASED ON THE ENGINEERS CALCULATIONS. SEE NOTE #2.
2. THE ENGINEER SHALL SUBMIT CALCULATIONS FOR THE MAXIMUM PULLING LENGTH, TOTAL PULL FORCE AND THE ALLOWABLE TENSILE LOAD, IN ACCORDANCE WITH AWWA M55 & ASTM F1804. DESIGN SHALL ALSO BE IN ACCORDANCE WITH ASTM F1962.
3. THE PIPE STRING SHALL BE ATTACHED TO THE BACKREAMER THROUGH A "WEAK-LINK" DEVICE TO ENSURE THAT THE PULLING FORCE DOES NOT EXCEED THE PIPE'S ALLOWABLE TENSILE LOAD RATING.
4. ONE # 10 GAUGE EXTRA HIGH STRENGTH COPPER CLAD STEEL TRACER WIRE SHALL BE PULLED AND SECURED TO THE PIPE FOR PIPELINES THAT ARE INSTALLED BY TRENCHLESS HORIZONTAL DIRECTIONAL DRILLING METHOD. IN TRENCHLESS/NON-DIRECTIONAL BORE APPLICATIONS, A # 10 GAUGE SOLID INSULATED COPPER WIRE SHALL BE ATTACHED TO THE PIPE. TRACER WIRES SHALL HAVE A MINIMUM 30-MILS OF POLYETHYLENE INSULATION.
5. COLOR CODED BLUE FOR POTABLE WATER MAINS.
6. COLOR CODED PURPLE (PANTONE 522 C) FOR RECLAIMED WATER MAINS.
7. COLOR CODED GREEN FOR SANITARY FORCE MAINS.
8. PIPE DEPTHS MAY NEED TO BE DEEPER TO AVOID FRACKOUTS.

MANATEE COUNTY
PUBLIC WORKS DEPARTMENT

REV.BY	DATE
CLB/BR	11/10

MAY 10, 2011
DATE OF APPROVAL

DIRECTIONAL BORE SUBAQUEOUS CROSSING

UG-5

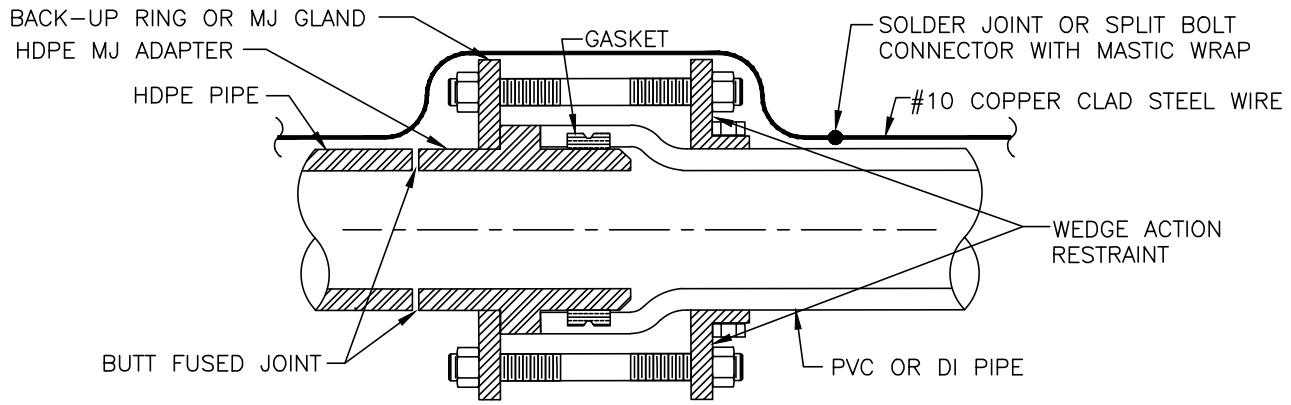

HDPE PIPE TO PVC PIPE / SPIGOT TO BELL CONNECTION

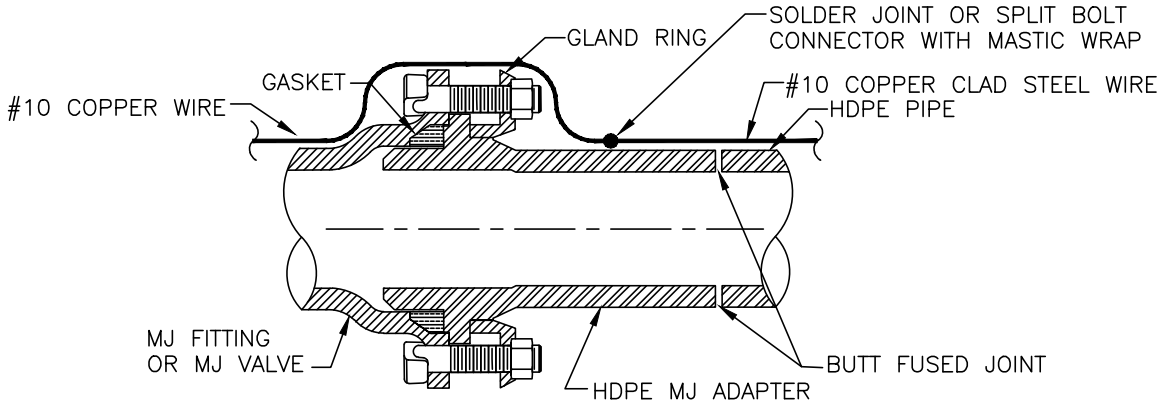

NOTE: SCHEMATIC SHOWN FOR STANDARD MJ FITTINGS AND GATE VALVES.

HDPE PIPE TO MJ FITTING TRANSITION

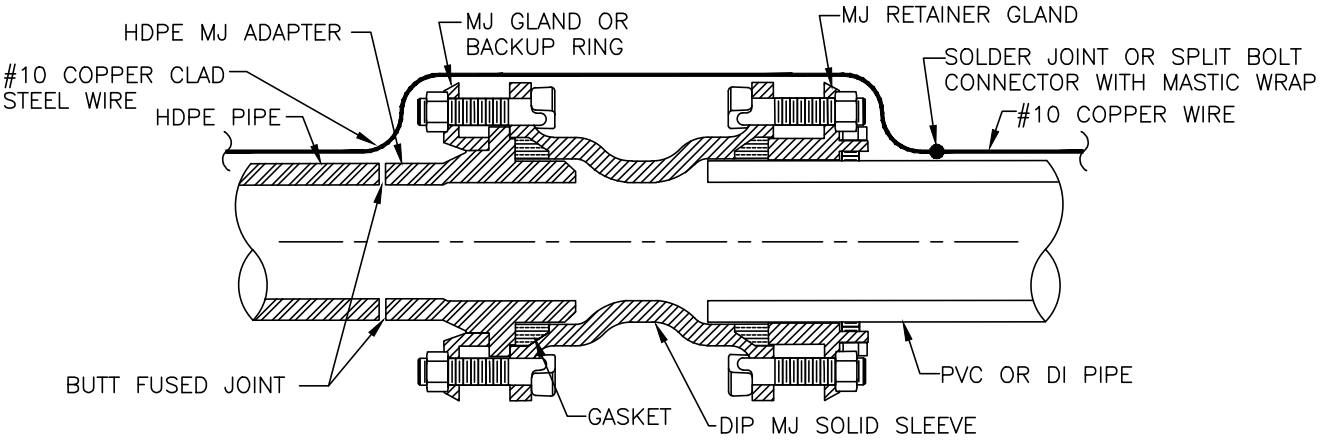

HDPE PIPE TO PVC PIPE SPIGOT TO SPIGOT CONNECTION

1. ONE # 10 GAUGE EXTRA HIGH STRENGTH COPPER CLAD STEEL TRACER WIRE SHALL BE PULLED AND SECURED TO THE PIPE FOR PIPELINES THAT ARE INSTALLED BY TRENCHLESS HORIZONTAL DIRECTIONAL DRILLING METHOD. IN NON-DIRECTIONAL BORE (TRENCHES AND BORE & JACK) APPLICATIONS, A # 10 GAUGE SOLID INSULATED COPPER WIRE SHALL BE ATTACHED TO THE PIPE. TRACER WIRES SHALL HAVE A MINIMUM 30-MILS OF POLYETHYLENE INSULATION.

MANATEE COUNTY PUBLIC WORKS DEPARTMENT			HDPE TO PVC OR DI PIPE ADAPTER	UG-6
REV.BY	DATE			
CLB/BR	11/10	MAY 10, 2011 DATE OF APPROVAL		PAGE 106

THRUST BLOCK DIMENSIONS B ft. x d inches												
PIPE SIZE	90°BEND		45°BEND		22.5°BEND		11.25°BEND		DEAD END & TEE		45° WYE	
(IN.)	B	d	B	d	B	d	B	d	B	d	B	d
4	1.5	3 ½	1.1	3 ½	0.8	3 ½	0.6	3 ½	1.3	3 ½	1.1	3 ½
6	2.2	5 ¼	1.6	3 ¾	1.2	3 ½	0.8	3 ½	1.9	4 ½	1.6	3 ¾
8	2.9	7	2.1	5	1.5	3 ½	1.1	3 ½	2.4	5 ¾	2.0	4 ¾
10	3.5	8 ½	2.6	6 ¼	1.9	4 ½	1.3	3 ½	3.0	7 ¼	2.5	6
12	4.2	10	3.1	7 ½	2.2	5 ¼	1.6	3 ¾	3.5	8 ¼	3.0	7 ¼
14	4.9	11 ¾	3.6	8 ¾	2.6	6 ¼	1.8	4 ¼	4.1	9 ¾	3.4	8 ¼
16	5.5	13 ¼	4.1	9 ¾	2.9	7	2.1	5	4.7	11 ¼	3.9	9 ¼
18	6.2	15	4.6	11	3.3	8	2.3	5 ½	5.2	12 ½	4.4	10 ½
20	6.9	16 ½	5.0	12	3.6	8 ¾	2.6	6 ¼	5.8	14	4.9	11 ¾
24	8.2	19 ¾	6.0	14 ½	4.3	10 ¼	3.1	7 ½	6.9	16 ½	5.8	14
30	10.1	24 ¼	7.5	18	5.3	12 ¾	3.8	9	8.5	20 ½	7.2	17 ¼
36	12.1	29	8.9	21 ¼	6.4	15 ¼	4.5	10 ¾	10.2	24 ½	8.6	20 ¾

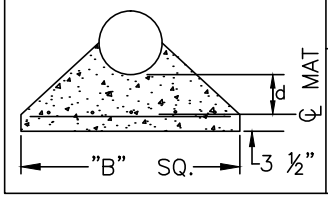

REINFORCEMENT MAT SCHEDULE

FOR DIM. "B" BETWEEN 5.75' & 12.5' USE #4 @ 8" EACH WAY
FOR DIM. "B" LESS THAN 5.75' USE #3 @ 8" EACH WAY

NOTES:

1. ALL THRUST BLOCKS SHALL BE CAST IN PLACE. FITTINGS ADJACENT TO THRUST BLOCKS SHALL BE WRAPPED IN POLYETHYLENE.
2. THIS TABLE IS BASED ON WATER PRESSURE=180 PSI WITH AN ALLOWABLE SOIL BEARING PRESSURE=2000 PSF, CONCRETE STRENGTH f_c =3000 PSI, REINFORCEMENT f_y =60.0 KSI. THRUST BLOCK SHALL BE CAST AGAINST FIRM UNDISTURBED SOIL.
3. FOR LARGER "B" DIMENSIONS IT IS NECESSARY TO CHECK THAT PIPE IS SUFFICIENTLY DEEP TO ALLOW 15" MIN. SOIL COVER OVER TOP EDGE OF THRUST BLOCK.
4. RESTRAINED JOINTS MAY BE USED IN LIEU OF THRUST BLOCKS TO SAVE SPACE. THRUST BLOCKS SHALL BE USED IN SITUATIONS WHERE THRUST BLOCKS AND RESTRAINED JOINTS ARE BOTH REQUIRED.

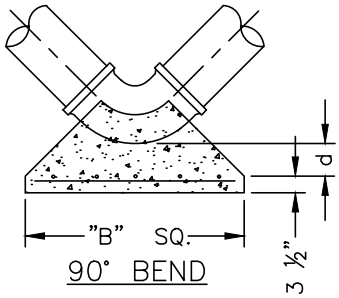

90° BEND

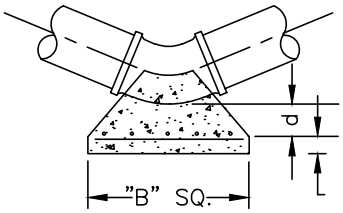

45°, 22.5° OR 11.25° BEND

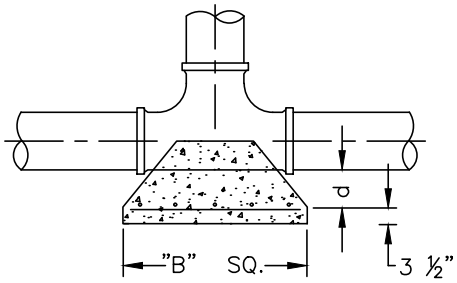

TEE OR DEAD END

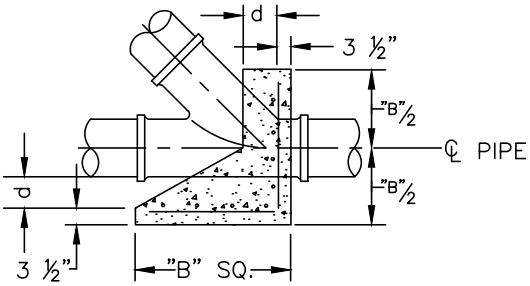

45° WYE

MANATEE COUNTY
PUBLIC WORKS DEPARTMENT

REV.BY	DATE
CLB/BR	11/10

MAY 10, 2011
DATE OF APPROVAL

CONCRETE THRUST BLOCKS

UG–7

REQUIRED LENGTH OF RESTRAINED JOINT PIPE FOR DR-18 PVC PIPE

MAIN PIPE SIZE	HORIZ. BENDS			TEES					REDUCERS			PLUGS & VALVES
	90°	45°	22.5°	SIZE / LENGTH					SIZE / LENGTH			
24	90	38	18	X24 / 169	X20 / 132	X16 / 90	X12 / 38	X10 / 6	X20 / 64	X16 / 117	X12 / 158	214
20	78	32	16	X20 / 141	X16 / 101	X12 / 53	X10 / 24	X8 / 1	X16 / 65	X12 / 115	X10 / 149	184
16	66	27	13	X16 / 111	X12 / 67	X10 / 41	X8 / 12		X12 / 64	X10 / 107	X8 / 111	151
12	52	22	10	X12 / 80	X10 / 56	X8 / 31	X6 / 1		X10 / 58	X8 / 62	X6 / 86	118
10	44	18	9	X10 / 63	X8 / 40	X6 / 7			X8 / 33	X6 / 61	X4 / 81	100
8	37	15	7	X8 / 49	X6 / 18	X4 / 1			X6 / 35	X4 / 60		83
6	29	12	6	X6 / 29	X4 / 1				X4 / 33			63
4	21	8	4	X4 / 12								45

NOTES:

1. RESTRAIN 11.25° BENDS 50% OF LENGTH FOR 22.5° BENDS.
2. ALL VALVES AND FITTINGS SHALL BE RESTRAINED TO THE CONNECTINGSECTIONS OF PIPE.
3. ALL ISOLATIONVALVES MUST BE PROPERLY ANCHORED OR RESTRAINED TO RESIST A 180 PSI TEST PRESSURE IN EITHER DIRECTION.
4. PIPE SIZES ARE GIVEN IN INCHES.
5. RESTRAINED PIPE LENGTHS ARE GIVEN IN FEET.
6. LENGTHS SHOWN ARE FOR A TEST PRESURE OF 180 PSI.
7. THE RESTRAINED LENGTHS SHOWN IN THESE TABLES ARE BASED ON SOIL CLASSIFICATION SP WITH AWWA TYPE 3 TRENCH CONDITIONS, 180 PSI TEST PRESSURE, 3 FEET OF COVER AND 1.5 FACTOR OF SAFTEY. ACTUAL BURY CONDITIONS MUST BE DETERMINED BY THE ENGINEER OF RECORD AND THE RESTRAINED LENGTHS MODIFIED ACCORDINGLY.
8. RESTRAINED LENGTHS TO BE APPLIED TO PIPELINES PER DETAIL RESTRAINED LENGTHS FOR PIPE.

REQUIRED LENGTH OF RESTRAINED JOINT PIPE FOR DIP (POLY-WRAPPED)

MAIN PIPE SIZE	HORIZ. BENDS			TEES						REDUCERS				PLUGS & VALVES
	90°	45°	22.5°	SIZE / LENGTH						SIZE / LENGTH				
36	142	59	28	x36 / 393	x30 / 318	x24 / 232	x20 / 165	x16 / 84	x12 / 1	X30 / 137	X24 / 247	X20 / 309	X16 / 359	453
30	124	51	25	X30 / 333	X24 / 252	X20 / 189	X16 / 115	X12 / 23	x10 / 1	X24 / 137	X20 / 213	X16 / 276		391
24	106	44	21	X24 / 270	X20 / 211	X16 / 143	X12 / 61	X10 / 10	x8 / 1	X20 / 98	X16 / 178	X12 / 241		327
20	92	38	18	X20 / 225	X16 / 161	X12 / 85	X10 / 39	x8 / 1		X16 / 98	X12 / 176	X10 / 227		280
16	77	32	15	X16 / 177	X12 / 107	X10 / 65	X8 / 19	x6 / 1		X12 / 98	X10 / 163	X8 / 169		231
12	61	25	12	X12 / 127	X10 / 89	X8 / 50	x6 / 1			X10 / 88	X8 / 96	X6 / 131		181
10	52	22	10	X10 / 101	X8 / 64	x6 / 11				X8 / 51	X6 / 94	X4 / 125		153
8	44	18	9	X8 / 78	X6 / 30	x4 / 1				X6 / 54	X4 / 92			128
6	34	14	7	X6 / 46	x4 / 1					X4 / 50				98
4	24	10	5	x4 / 19										69

REQUIRED LENGTH OF RESTRAINED JOINT PIPE FOR DIP (NON-WRAPPED)

MAIN PIPE SIZE	HORIZ. BENDS			TEES						REDUCERS				PLUGS & VALVES
	90°	45°	22.5°	SIZE / LENGTH						SIZE / LENGTH				
36	100	42	20	x36 / 163	x30 / 132	x24 / 96	x20 / 68	x16 / 35	x12 / 1	X30 / 57	X24 / 103	X20 / 128	X16 / 149	188
30	88	37	18	X30 / 138	X24 / 104	X20 / 78	X16 / 48	X12 / 10	x10 / 1	X24 / 57	X20 / 88	X16 / 114		162
24	75	31	15	X24 / 112	X20 / 87	X16 / 59	X12 / 25	x10 / 4	x8 / 1	X20 / 40	X16 / 74	X12 / 100		135
20	65	27	13	X20 / 93	X16 / 67	X12 / 35	X10 / 16	x8 / 1		X16 / 41	X12 / 73	X10 / 94		116
16	54	22	11	X16 / 73	X12 / 44	X10 / 27	x8 / 8	x6 / 1		X12 / 41	X10 / 68	X8 / 70		96
12	43	18	8	X12 / 53	X10 / 37	X8 / 21	x6 / 1			X10 / 37	X8 / 40	X6 / 54		75
10	37	15	7	X10 / 42	X8 / 26	x6 / 5				X8 / 21	X6 / 39	X4 / 52		63
8	30	13	6	X8 / 32	X6 / 12	x4 / 1				X6 / 22	X4 / 38			53
6	24	10	5	X6 / 19	x4 / 1					X4 / 21				41
4	17	7	3	x4 / 8										29

NOTE:

SEE RESTRAINED LENGTHS FOR PVC PIPE DETAIL FOR NOTES 1 THROUGH 8 THAT ARE ALSO APPLICABLE TO RESTRAINED LENGTHS FOR DIP.

MANATEE COUNTY
PUBLIC WORKS DEPARTMENT

REV.BY	DATE
CLB/BR	11/10

MAY 10, 2011
DATE OF APPROVAL

RESTRAINED LENGTHS FOR DIP

UG-9

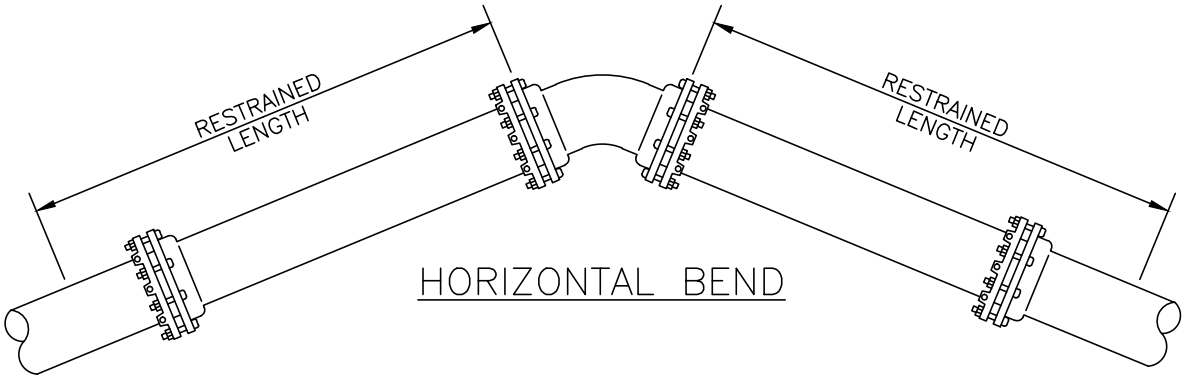

HORIZONTAL BEND

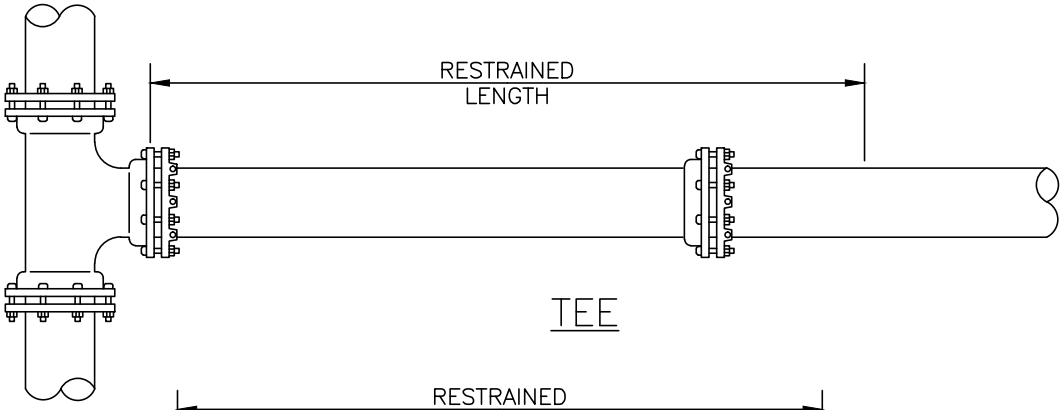

TEE

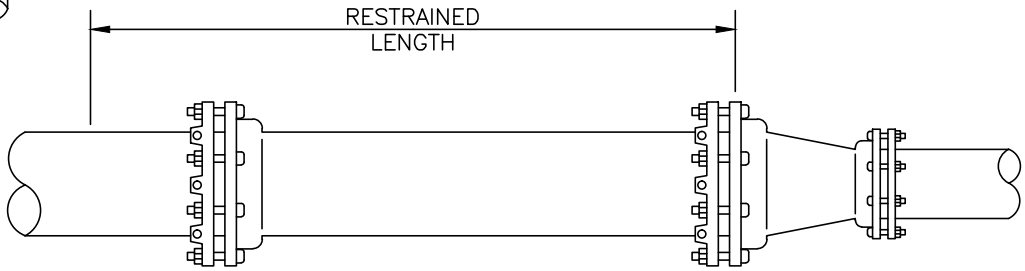

REDUCER

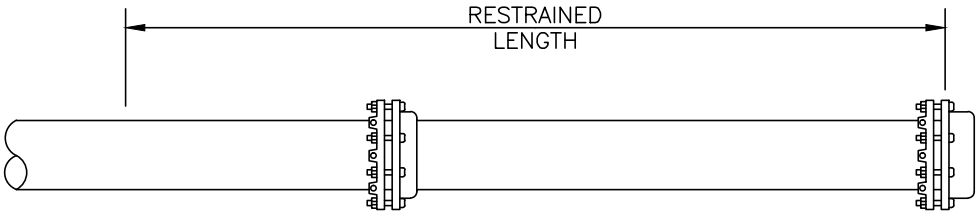

CAP OR PLUG

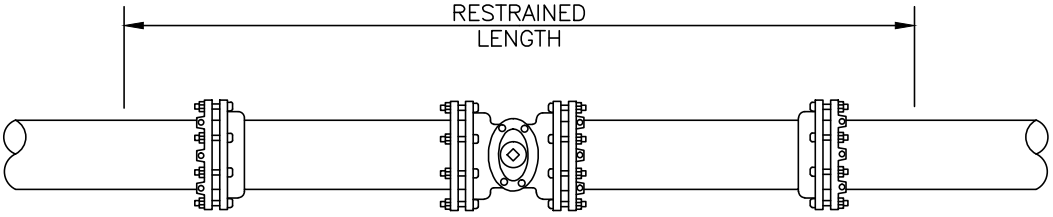

ISOLATION VALVE

MANATEE COUNTY
PUBLIC WORKS DEPARTMENT

REV.BY	DATE
CLB/BR	11/10

MAY 10, 2011
DATE OF APPROVAL

RESTRAINED LENGTHS FOR PIPE

UG-10

NOTES:

1. USE OF TYPE A–2 AND A–3 PIPE BEDDING TO BE DETERMINED IN THE FIELD BY THE ENGINEER.
2. PROVIDE ADEQUATE CLEARANCE TO PLACE AND COMPACT STAGE 1 BEDDING MATERIAL IN TRENCH AREA BELOW PIPE SPRINGLINE. PIPE EMBEDMENT MUST BE COMPACTED OUT TO THE TRENCH WALL OR 2.5 TIMES THE PIPE OD, WHICHEVER IS LESS.
3. TYPICALLY 4" TO 6".
4. PIPE INSTALLATION SHALL BE IN ACCORDANCE WITH THE MANUFACTURER'S WRITTEN INSTRUCTIONS.
5. TRACER WIRE NOT REQUIRED FOR GRAVITY SEWERS.

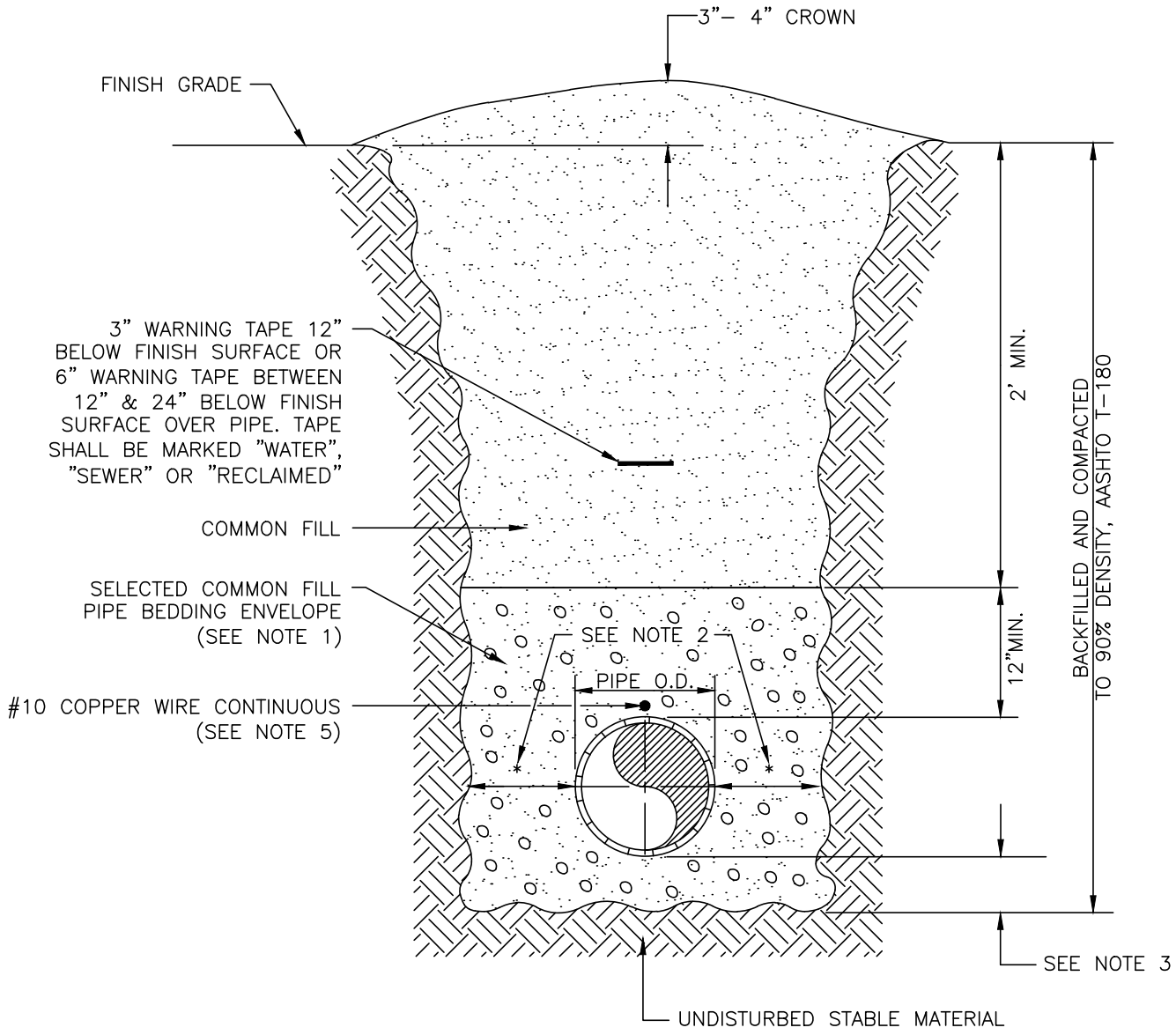

MANATEE COUNTY PUBLIC WORKS DEPARTMENT			TRENCH WITH UNIMPROVED SURFACE TYPE A–1 PIPE BEDDING	UG–11
REV.BY	DATE			
WRT/KE	03/11	MAY 10, 2011 DATE OF APPROVAL		PAGE 111

NOTES:

1. USE OF TYPE A–2 AND A–3 PIPE BEDDING TO BE DETERMINED IN THE FIELD BY THE ENGINEER.
2. PROVIDE ADEQUATE CLEARANCE TO PLACE AND COMPACT STAGE 1 BEDDING MATERIAL IN TRENCH AREA BELOW PIPE SPRINGLINE. PIPE EMBEDMENT MUST BE COMPACTED OUT TO THE TRENCH WALL OR 2.5 TIMES THE PIPE OD, WHICHEVER IS LESS.
3. TYPICALLY 4" TO 6".
4. PIPE INSTALLATION SHALL BE IN ACCORDANCE WITH THE MANUFACTURER'S WRITTEN INSTRUCTIONS.
5. ASPHALTIC CONCRETE STRUCTURE COURSE WITH PRIME COAT SHALL BE THE SAME DEPTH AND TYPE AS EXISTING OR A MINIMUM OF 1 1/4 INCH, WHICHEVER IS GREATER.
6. MILL 25' BACK FROM TRENCH SAW CUT. ADJUST MILLING PER INDIVIDUAL SITE TO NOT IMPACT BASE. BUTT JOINT TO EXIST ASPHALT. FINAL OVERLAY LIMITS ARE FROM EDGE OF PAVEMENT TO EDGE OF PAVEMENT. FINAL OVERLAY TO MATCH EXISTING WITH NO DISCERNABLE "BUMP" AT JOINT. MILLING LIMITS THAT IMPACT INTERSECTION SHALL BE ADDRESSED ON A CASE BY CASE BASIS AND APPROVED BY MANATEE COUNTY.
7. SHEETING ORDERED LEFT IN PLACE TO BE CUT OFF 24" BELOW FINISHED GRADE OR 12" BELOW SUBGRADE.
8. BASE SHALL BE 8" MINIMUM THICKNESS CRUSHED CONCRETE.
9. TEMPORARY PATCHES WILL BE INSTALLED TO PROVIDE A SMOOTH ALL WEATHER SURFACE AT ALL TIMES. PERMANENT REPLACEMENT TO BE MADE AS SOON AS POSSIBLE.
10. RESTORE SIGNAGE & MARKING WITH THERMOPLASTIC PER FDOT STANDARDS, LATEST EDITION.
11. TRACER WIRE NOT REQUIRED FOR GRAVITY SEWERS.
12. NOTES 5. THRU 10. ARE MINIMUM REQUIREMENTS FOR A TRENCH IN A ROAD. REFER TO LATEST EDITION OF MANATEE COUNTY HIGHWAY AND TRAFFIC STANDARDS FOR ADDITIONAL REQUIREMENTS.

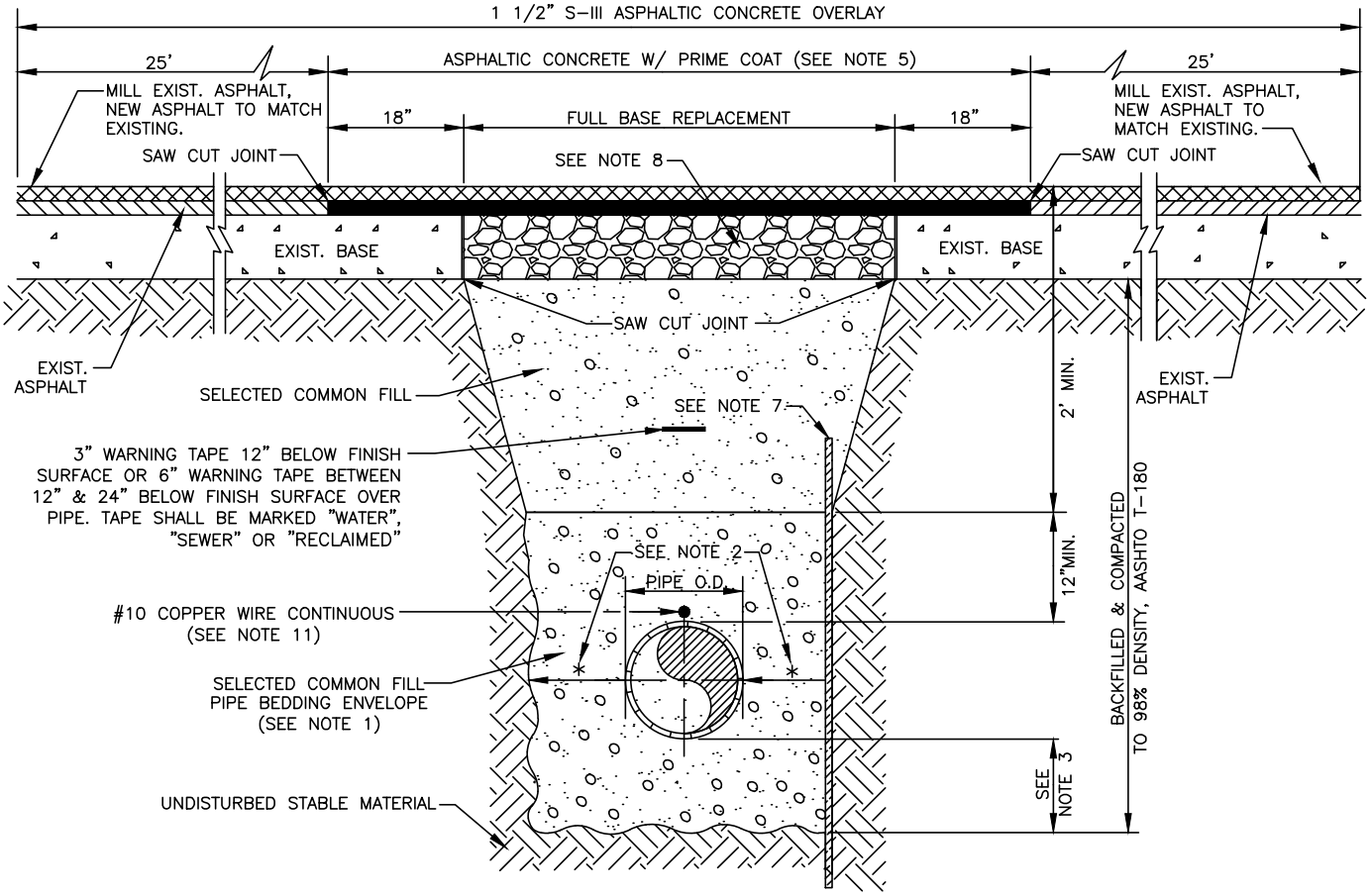

MANATEE COUNTY PUBLIC WORKS DEPARTMENT			TRENCH WITH ASPHALT PAVEMENT SURFACE TYPE A–1 PIPE BEDDING	UG–12
REV.BY	DATE			
WRT/KE	03/11	MAY 10, 2011 DATE OF APPROVAL		PAGE 112

NOTES:

1. USE OF TYPE A–2 AND A–3 PIPE BEDDING TO BE DETERMINED IN THE FIELD BY THE ENGINEER.
2. PROVIDE ADEQUATE CLEARANCE TO PLACE AND COMPACT STAGE 1 BEDDING MATERIAL IN TRENCH AREA BELOW PIPE SPRINGLINE. PIPE EMBEDMENT MUST BE COMPACTED OUT TO THE TRENCH WALL OR 2.5 TIMES THE PIPE OD, WHICHEVER IS LESS.
3. TYPICALLY 4" TO 6".
4. PIPE INSTALLATION SHALL BE IN ACCORDANCE WITH THE MANUFACTURER'S WRITTEN INSTRUCTIONS.
5. THICKNESS TO MATCH EXISTING OR BE 8" MINIMUM, WHICHEVER IS GREATER.
6. SHEETING ORDERED LEFT IN PLACE TO BE CUT OFF 24" BELOW FINISHED GRADE OR 12" BELOW SUBGRADE.
7. BASE SHALL BE 8" MINIMUM THICKNESS CRUSHED CONCRETE.
8. TEMPORARY PATCHES WILL BE INSTALLED TO PROVIDE A SMOOTH ALL WEATHER SURFACE AT ALL TIMES. PERMANENT REPLACEMENT TO BE MADE AS SOON AS POSSIBLE.
9. TRACER WIRE NOT REQUIRED FOR GRAVITY SEWERS.
10. NOTES 5. THRU 8. ARE MINIMUM REQUIREMENTS. REFER TO MANATEE COUNTY HIGHWAY AND TRAFFIC STANDARDS FOR ADDITIONAL REQUIREMENTS.

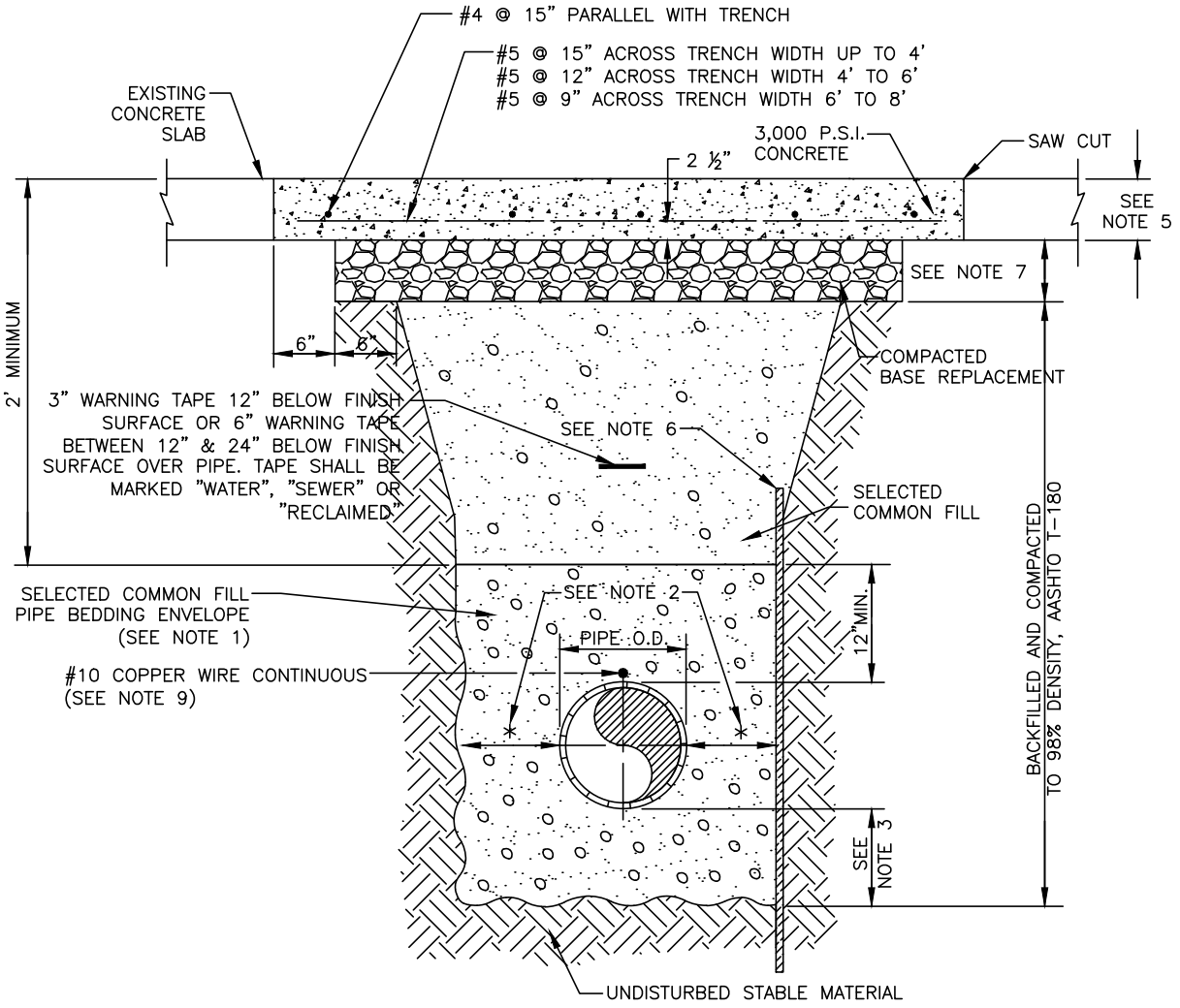

MANATEE COUNTY PUBLIC WORKS DEPARTMENT			TRENCH WITH CONCRETE PAVEMENT SURFACE TYPE A–1 PIPE BEDDING	UG–13
REV.BY	DATE			
CLB/BR	11/10	MAY 10, 2011 DATE OF APPROVAL		

NOTES:

1. USE OF TYPE A–2 AND A–3 PIPE BEDDING TO BE DETERMINED IN THE FIELD BY THE ENGINEER.
2. PROVIDE ADEQUATE CLEARANCE TO PLACE AND COMPACT STAGE 1 BEDDING MATERIAL IN TRENCH AREA BELOW PIPE SPRINGLINE. PIPE EMBEDMENT MUST BE COMPACTED OUT TO THE TRENCH WALL OR 2.5 TIMES THE PIPE OD, WHICHEVER IS LESS.
3. TYPICALLY 4" TO 6".
4. PIPE INSTALLATION SHALL BE IN ACCORDANCE WITH THE MANUFACTURER'S WRITTEN INSTRUCTIONS.
5. THICKNESS TO MATCH EXISTING OR BE 6" MINIMUM, WHICHEVER IS GREATER.
6. SHEETING ORDERED LEFT IN PLACE TO BE CUT OFF 24" BELOW FINISH GRADE OR 12" BELOW SUBGRADE.
7. BASE SHALL BE COMPACTED 6" MINIMUM THICKNESS OF APPROVED MATERIAL.
8. DRIVEWAYS SHALL BE CONSTRUCTED IN ACCORDANCE WITH THE LATEST ADOPTED CONSTRUCTION STANDARDS OF THE MANATEE COUNTY TRANSPORTATION DEPARTMENT.
9. IF THE DRIVEWAY IS 12' OR WIDER, SAWCUT AN EXPANSION JOINT ALONG THE CENTER OF THE DRIVEWAY (3/16" WIDE AND 1½" DEEP) AFTER THE CONCRETE HAS SET.
10. IF THERE IS AN EXISTING EXPANSION JOINT WITHIN 3' OF THE PROPOSED JOINT, EXTEND DRIVEWAY REPLACEMENT TO THE EXISTING JOINT.
11. TRACER WIRE NOT REQUIRED FOR GRAVITY SEWERS.

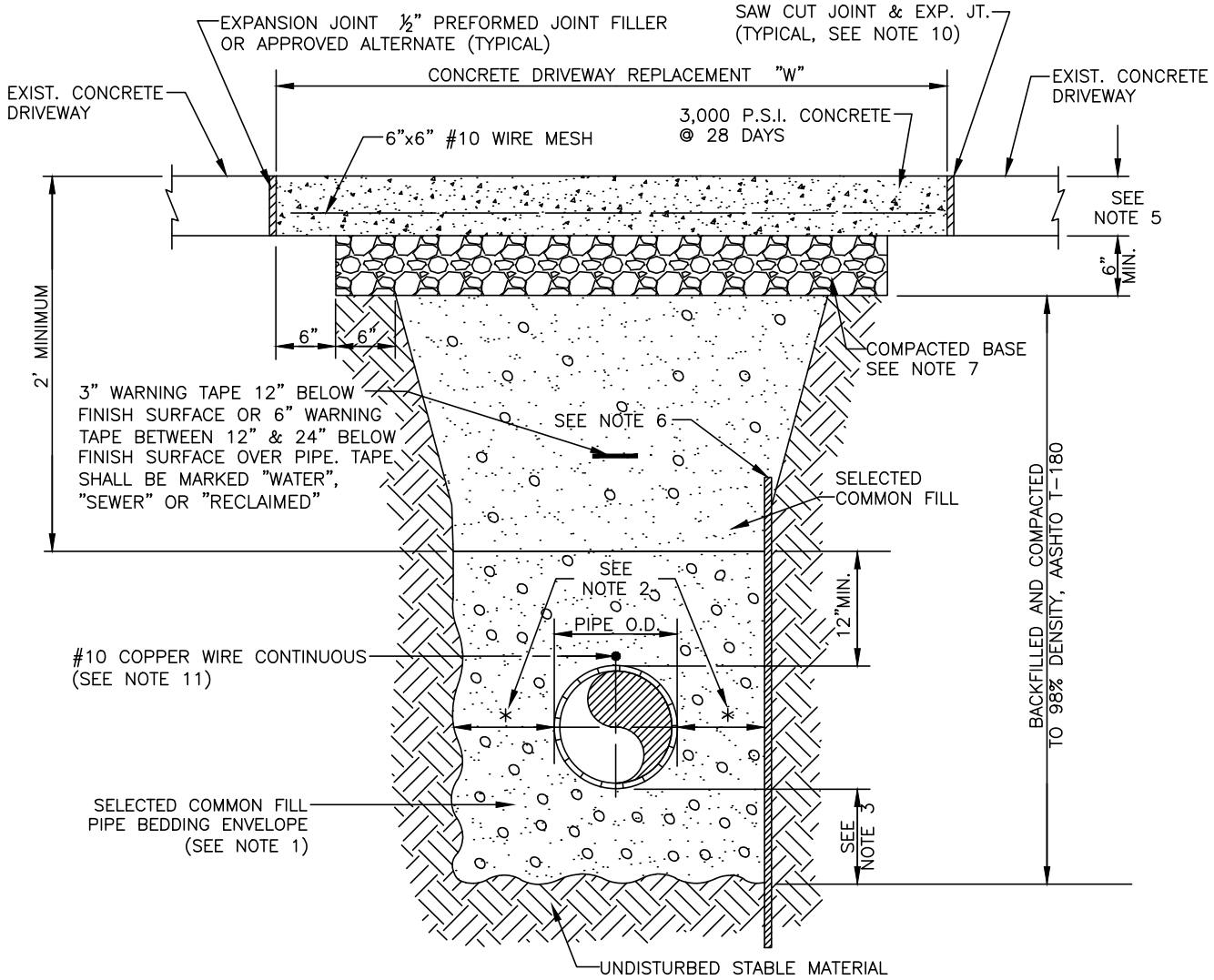

MANATEE COUNTY PUBLIC WORKS DEPARTMENT			TRENCH WITH CONCRETE DRIVEWAY SURFACE TYPE A–1 PIPE BEDDING	UG–14
REV.BY	DATE			
CLB/BR	11/10	MAY 10, 2011 DATE OF APPROVAL		PAGE 114

NOTES:

1. PROVIDE ADEQUATE CLEARANCE TO PLACE AND COMPACT STAGE 1 BEDDING MATERIAL IN TRENCH AREA BELOW PIPE SPRINGLINE. PIPE EMBEDMENT MUST BE COMPACTED OUT TO THE TRENCH WALL OR 2.5 TIMES THE PIPE OD, WHICHEVER IS LESS.

2. TYPICALLY 4" TO 6".

3. PIPE INSTALLATION SHALL BE IN ACCORDANCE WITH MANUFACTURER'S WRITTEN INSTRUCTIONS.

4. TRACER WIRE NOT REQUIRED FOR GRAVITY SEWERS.

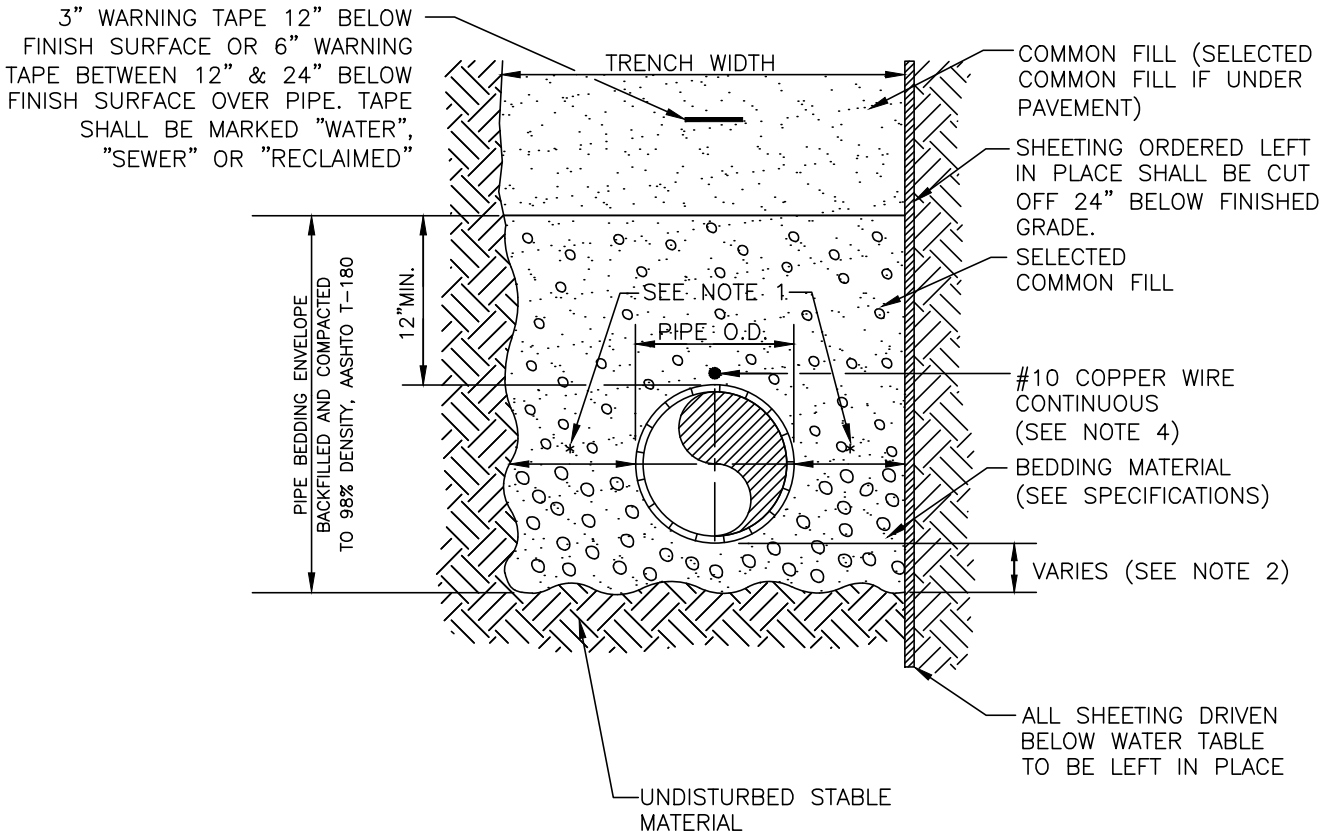

MANATEE COUNTY PUBLIC WORKS DEPARTMENT			TRENCH WITH TYPE A-2 PIPE BEDDING	UG-15
REV.BY	DATE			
CLB/BR	11/10	MAY 10, 2011 DATE OF APPROVAL		PAGE 115

NOTES:

2. PROVIDE ADEQUATE CLEARANCE TO PLACE AND COMPACT STAGE 1 BEDDING MATERIAL IN TRENCH AREA BELOW PIPE SPRINGLINE. PIPE EMBEDMENT MUST BE COMPACTED OUT TO THE TRENCH WALL OR 2.5 TIMES THE PIPE OD, WHICHEVER IS LESS.

3. TYPICALLY 4" TO 6".

4. PIPE INSTALLATION SHALL BE IN ACCORDANCE WITH MANUFACTURER'S WRITTEN INSTRUCTIONS.

5. TRACER WIRE NOT REQUIRED FOR GRAVITY SEWERS.

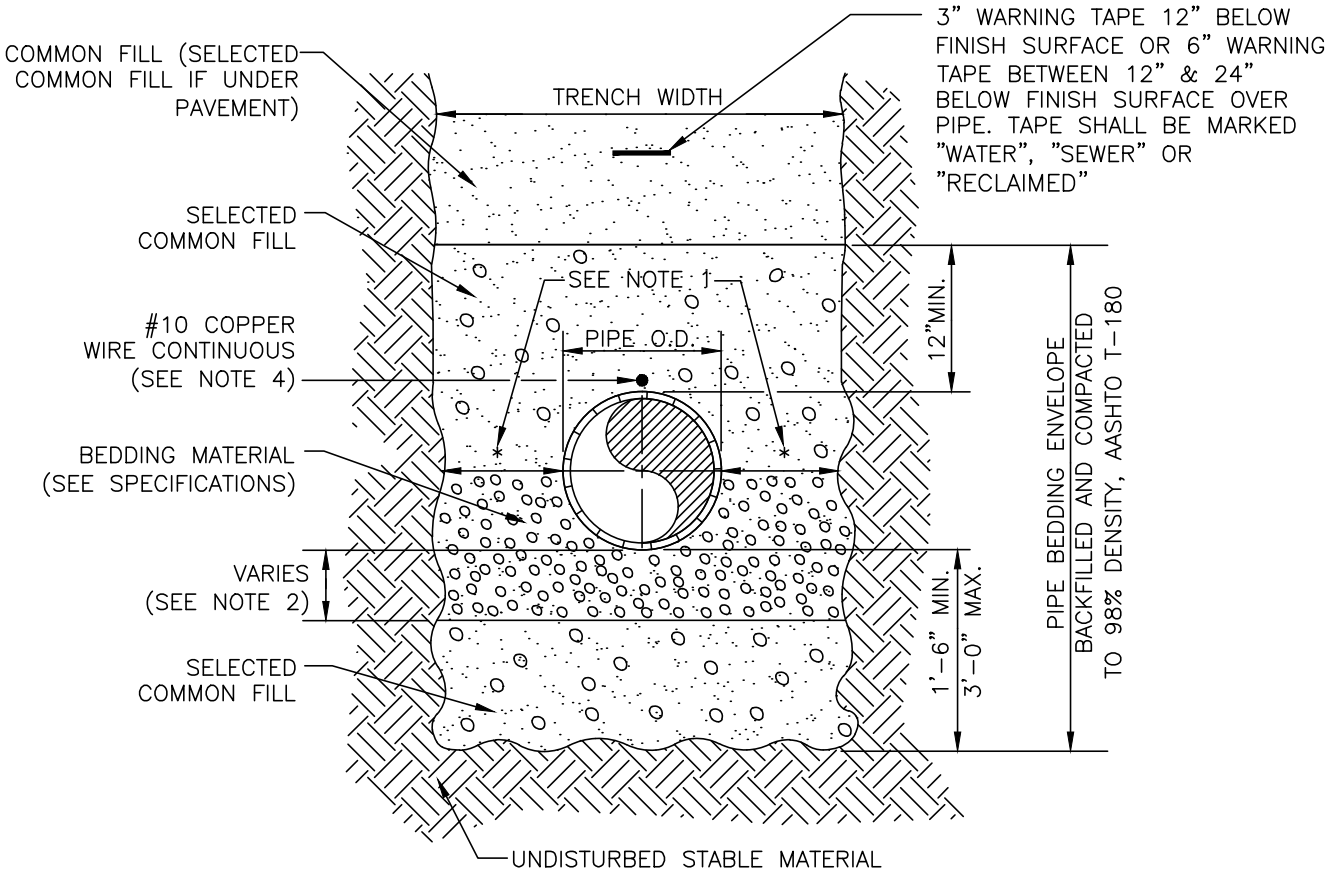

MANATEE COUNTY PUBLIC WORKS DEPARTMENT			TRENCH WITH TYPE A-3 PIPE BEDDING	UG-16
REV.BY	DATE			
CLB/BR	11/10	MAY 10, 2011 DATE OF APPROVAL		

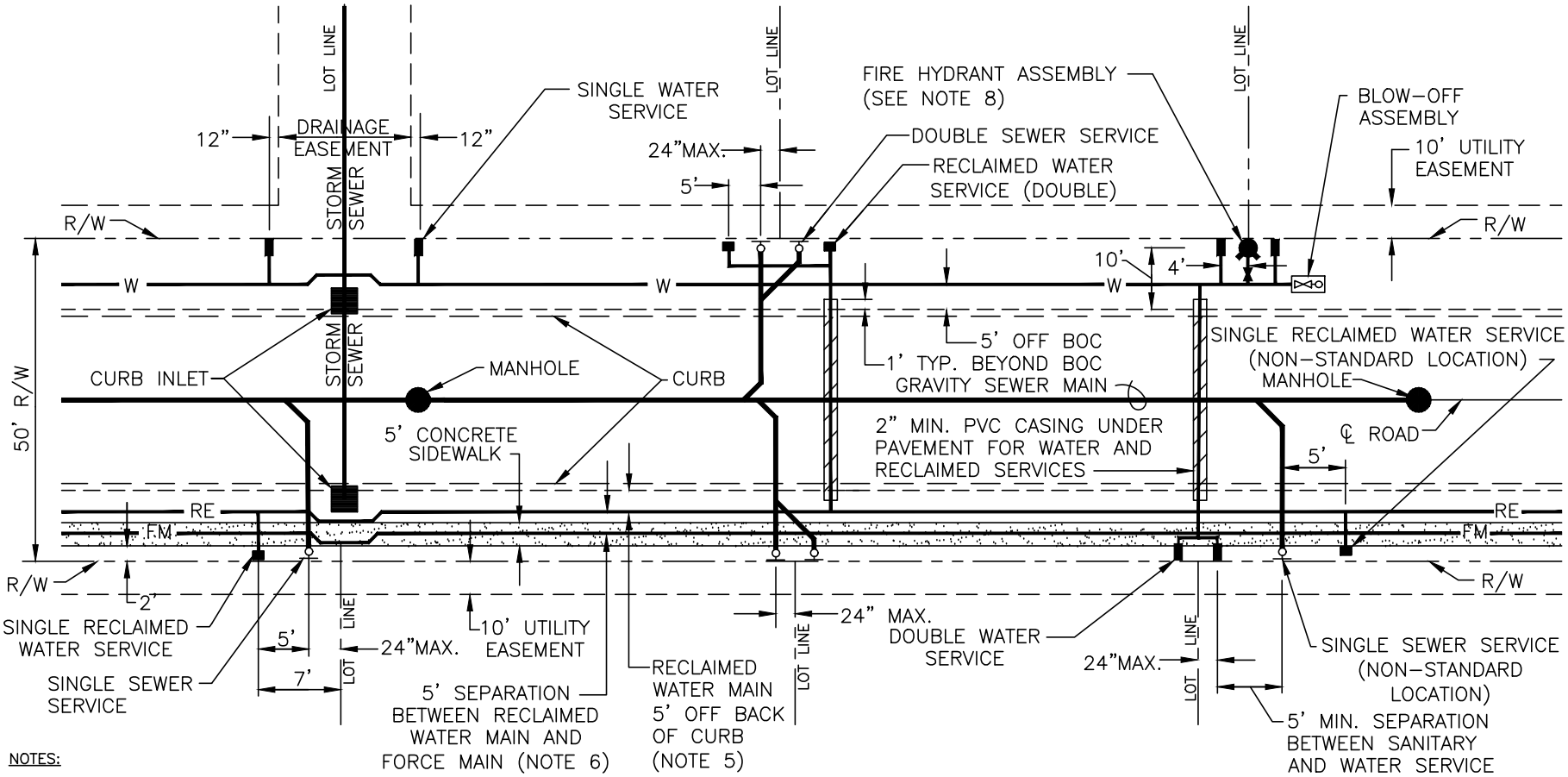

NOTES:

1. 5' WIDE SIDEWALK TO BE LOCATED 2' OFF RIGHT-OF-WAY LINE (4' SEPARATION FROM SIDEWALK TO BACK OF CURB). SEE PLAN FOR SIDEWALK LOCATION.
2. WATER SERVICES TO BE 24" MAX. OFF LOT LINE, 12" MAX. AT DRAINAGE EASEMENTS. SANITARY CLEAN-OUTS TO BE 12" OFF RIGHT-OF-WAY LINE AND 24" MAX. OFF LOT LINE, 12" MAX. AT DRAINAGE EASEMENTS. RECLAIMED WATER SERVICES TO BE 7' MAX. OFF LOT LINE (5' AWAY FROM SANITARY SERVICES), 6' MAX. AT DRAINAGE EASEMENTS.
3. POTABLE WATER MAIN TO BE 5' OFF BACK OF CURB, ON OPPOSITE SIDE OF ROAD FROM SIDEWALK.
4. SEWER MAIN TO BE ALONG CENTERLINE OF ROADWAY, EXCEPT IN CURVES, AND SHALL IN NO CASE BE CLOSER THAN 10' AWAY FROM POTABLE WATER MAINS AND 5' AWAY FROM RECLAIMED WATER MAINS. MANHOLE COVERS SHALL BE IN CENTERLINE OF ROADWAY, OR CENTER OF TRAVELED LANE.
5. RECLAIMED WATER MAIN TO BE 5' OFF BACK OF CURB (OPPOSITE SIDE OF ROAD FROM POTABLE WATER MAIN), EXCEPT WHEN INSTALLED ON SAME SIDE OF ROAD AND PARALLEL TO FORCE MAIN, IN WHICH CASE RECLAIMED WATER MAIN TO BE 3' OFF BACK OF CURB. 10' UTILITY EASEMENT SHALL BE IN THE FRONT OF THE LOTS IN LIEU OF THE BACK OF THE LOTS.
6. FORCE MAIN TO BE 5' OFF BACK OF CURB (OPPOSITE SIDE OF ROAD FROM POTABLE WATER MAIN), EXCEPT WHEN INSTALLED ON SAME SIDE OF ROAD AND PARALLEL TO RECLAIMED WATER MAIN, IN WHICH CASE FORCE MAIN TO BE 8' OFF BACK OF CURB.
7. POTABLE WATER, RECLAIMED WATER AND FORCE MAINS TO DEFLECT BEHIND AND DO NOT TOUCH CURB INLETS. MAXIMUM OBTAINABLE SEPARATION OF POTABLE WATER, RECLAIMED WATER AND FORCE MAINS TO CURB INLETS SHALL BE PROVIDED WHILE MAINTAINING ALL OTHER SETBACK REQUIREMENTS.
8. FIRE HYDRANTS TO BE 10' OFF BACK OF CURB, ON SAME SIDE OF ROAD AS WATER MAIN, AT LOT LINES (TYPICALLY AT PROPERTY CORNERS WHERE WATER SERVICES ARE LOCATED).
9. PVC CASINGS FOR WATER AND RECLAIMED WATER SERVICE ROADWAY CROSSINGS TO HAVE 36" MINIMUM COVER.
10. THE MINIMUM SETBACKS FOR FORCEMAINS, POTABLE & RECLAIMED WATERMAINS FROM THE BACK OF CURB AND SETBACKS FROM THE R/W LINE FOR A 50' R/W SHALL ALSO BE MAINTAINED FOR ALL OTHER R/W WIDTHS.

REV.BY	DATE
CLB/BR	11/10

MANATEE COUNTY
PUBLIC WORKS DEPARTMENT

MAY 10, 2011
DATE OF APPROVAL

UTILITY LAYOUT FOR 50' R/W

UG-17

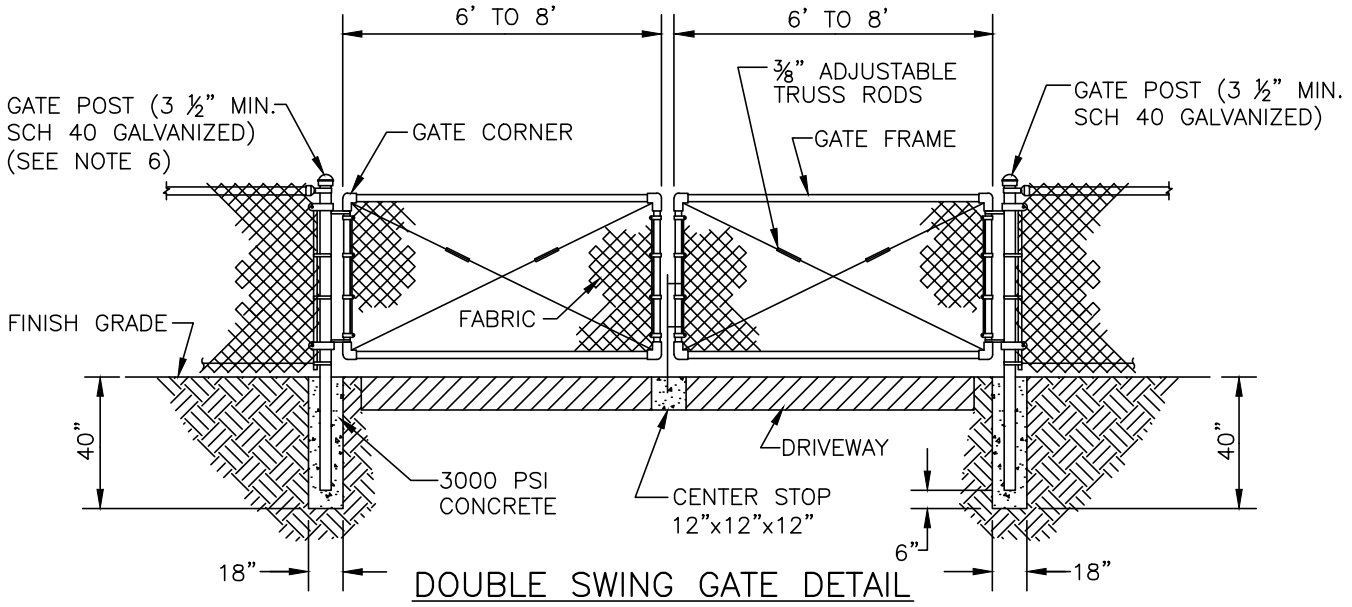

DOUBLE SWING GATE DETAIL

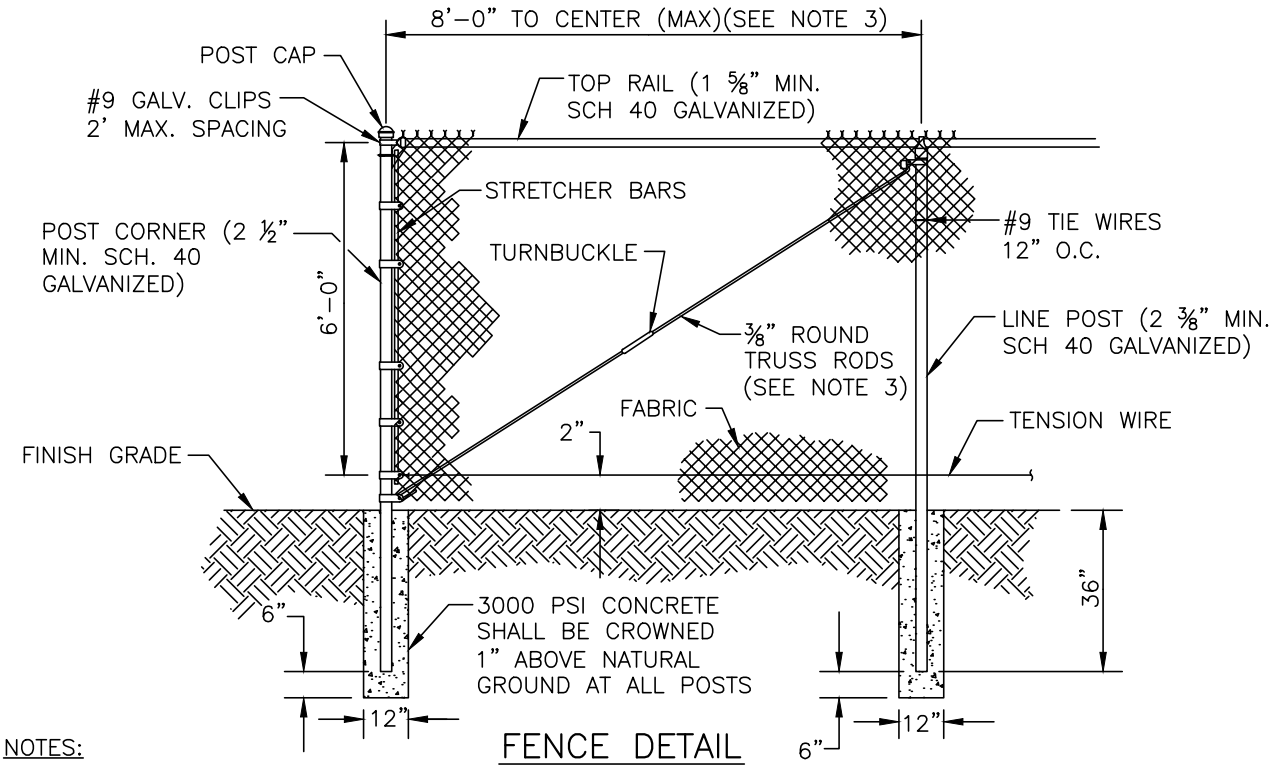

FENCE DETAIL

NOTES:

1. FENCING SHALL BE CONCRETE AGGREGATE, STUCCO, BRICK, STONE, SPLIT FACE CONCRETE MASONARY, OR CHAIN LINK.
2. CHAIN LINK FENCING SHALL BE #9 GAUGE, GALVANIZED STEEL WITH VINYL COATING.
3. TRUSS BARS ON CHAIN LINK FENCES ARE REQUIRED FOR THE FIRST SPAN ON EACH SIDE OF THE CORNER POST AND FOR EACH GATE SECTION.
4. LANDSCAPE SCREENING SHALL BE LOCATED ON THE EXTERIOR OF LIFT STATION FENCING.
5. SWING GATES SHALL BE CAPABLE OF SWINGING BOTH INWARDS AND OUTWARDS. CANTILEVER SLIDE GATES AND ROLL SLIDE GATES MEETING FDOT DESIGN STANDARDS MAY BE USED AS AN OPTION TO SWING GATES.
6. GATE POSTS AND TRACK LINE POSTS SHALL BE 4 INCH SCHEDULE 40 FOR CANTILEVER SLIDE GATES AND ROLL SLIDE GATES.

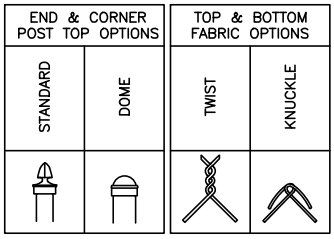

MANATEE COUNTY PUBLIC WORKS DEPARTMENT			SECURITY FENCING	UG-18
REV.BY	DATE			
CLB/BR	11/10	MAY 10, 2011 DATE OF APPROVAL		PAGE 118

TABLE OF CONTENTS

UTILITY STANDARDS–WATER DISTRIBUTION SYSTEM

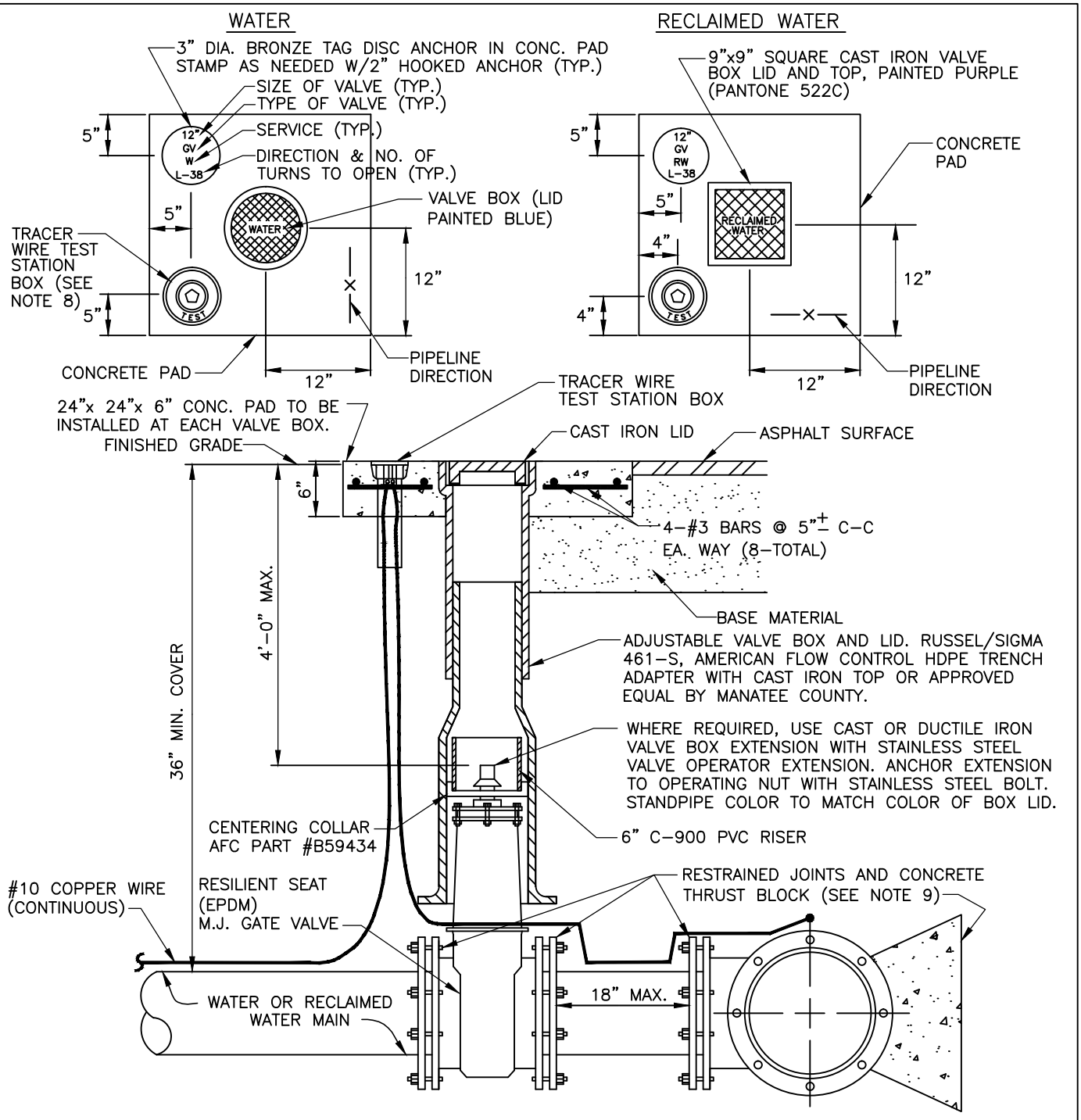

NOTES:

1. "WV" OR "RWV" TO BE IMPRESSED INTO THE NEWLY-POURED CONCRETE CURB, ALONG WITH DISTANCE IN FEET TO THE VALVE. IF NO CURB, INSTALL A BLUE DISC WITH "WV" OR PURPLE DISC WITH "RWV" AND A 1/8"x1" GALVANIZED STEEL SCREW IN THE EDGE OF PAVEMENT WITH THE FOOTAGE FROM THE DISC TO THE VALVE.
2. ALL EXISTING AND PROPOSED VALVE BOXES SHALL BE ADJUSTED TO FINISHED GRADES AS DETERMINED IN THE FIELD.
3. WATER VALVES SHALL NOT BE PLACED IN HANDICAPPED RAMPS.
4. PRECAST CONCRETE PADS & THRUST BLOCKS SHALL NOT BE USED.
5. ALL EXPOSED EDGES OF CONCRETE SHALL BE CHAMFERED 1/2".
6. FOR VALVES 16" AND LARGER, USE BUTTERFLY VALVES.
7. PIPELINE DIRECTION TO BE IMPRESSED INTO NEWLY POURED CONCRETE PAD.
8. TRACER WIRE TEST STATION BOX IS NOT REQUIRED IN VALVE BOX PAD IF THE GATE VALVE IS LOCATED WITHIN 200 FEET OF A WATER SERVICE, BLOW-OFF, BACKFLOW PREVENTER OR FIRE HYDRANT THAT HAS A TRACER WIRE BOX.
9. WHERE THRUST BLOCK NOT USED, RESTRAINED JOINTS MUST THEN EXTEND FROM TEE FULL LENGTH SPECIFIED FOR "TEES."
10. BINGHAM & TAYLOR P200NFG FOR NORMAL YARD SERVICE. WHERE VALVE WILL BE IN STREET OR PARKING UNDER VEHICLE TRAFFIC, USE P525RD CENTERED IN SEPARATE CONCRETE PAD SIMILAR TO STANDARD VALVE BOX PAD.

MANATEE COUNTY
PUBLIC WORKS DEPARTMENT

REV.BY	DATE
CLB/KE	11/10

MAY 10, 2011
DATE OF APPROVAL

GATE VALVE, BOX, LID AND TAG

UW-2

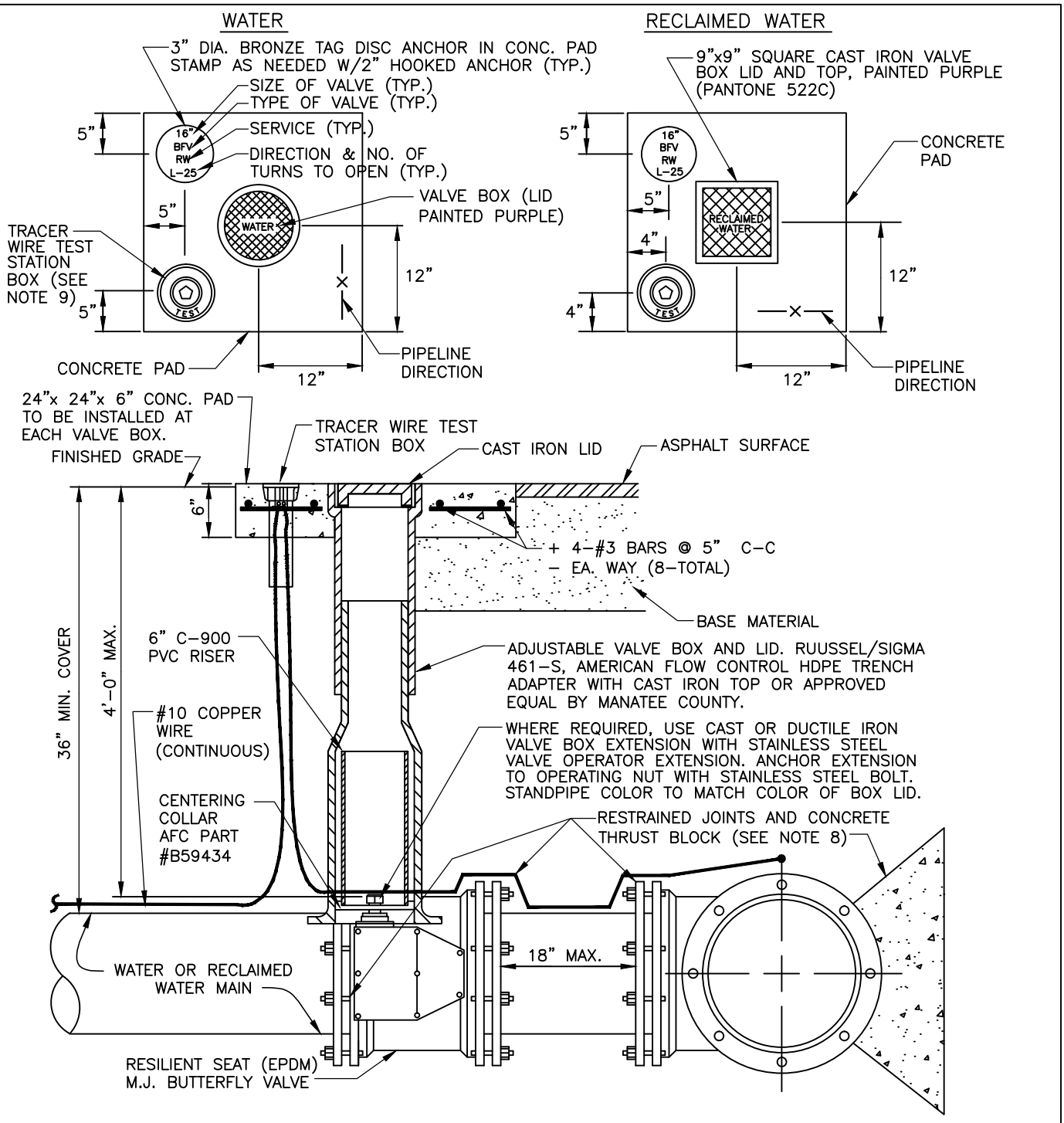

NOTES:

1. "WV" OR "RWV" TO BE IMPRESSED INTO THE NEWLY-POURED CONCRETE CURB, ALONG WITH IF NO CURB, INSTALL A BLUE DISC WITH "WV" OR PURPLE DISC DISTANCE IN FEET TO THE VALVE. WITH "RWV" AND A 1/8"x1" GALVANIZED STEEL SCREW IN THE EDGE OF PAVEMENT WITH THE FOOTAGE FROM THE DISC TO THE VALVE.
2. ALL EXISTING AND PROPOSED VALVE BOXES SHALL BE ADJUSTED TO FINISHED GRADES AS DETERMINED IN THE FIELD.
3. WATER VALVES SHALL NOT BE PLACED IN HANDICAPPED RAMPS.
4. PRECAST CONCRETE PADS & THRUST BLOCKS SHALL NOT BE USED.
5. ALL EXPOSED EDGES OF CONCRETE SHALL BE CHAMFERED 1/2".
6. FOR VALVES 16" AND LARGER, USE BUTTERFLY VALVES.
7. PIPELINE DIRECTION TO BE IMPRESSED INTO NEWLY POURED CONCRETE PAD.
8. WHERE THRUST BLOCK NOT USED, RESTRAINED JOINTS MUST THEN EXTEND FROM TEE FULL LENGTH SPECIFIED FOR "TEES."
9. BINGHAM & TAYLOR P200NFG OR EQUAL FOR NORMAL YARD SERVICE. WHERE VALVE WILL BE IN STREET OR PARKING UNDER VEHICLE TRAFFIC, USE P525RD CENTERED IN SEPARATE CONCRETE PAD SIMILAR TO STANDARD VALVE BOX PAD.

MANATEE COUNTY
PUBLIC WORKS DEPARTMENT

REV.BY	DATE
CLB/KE	11/10

MAY 10, 2011
DATE OF APPROVAL

BUTTERFLY VALVE, BOX, LID AND TAG

UW-3

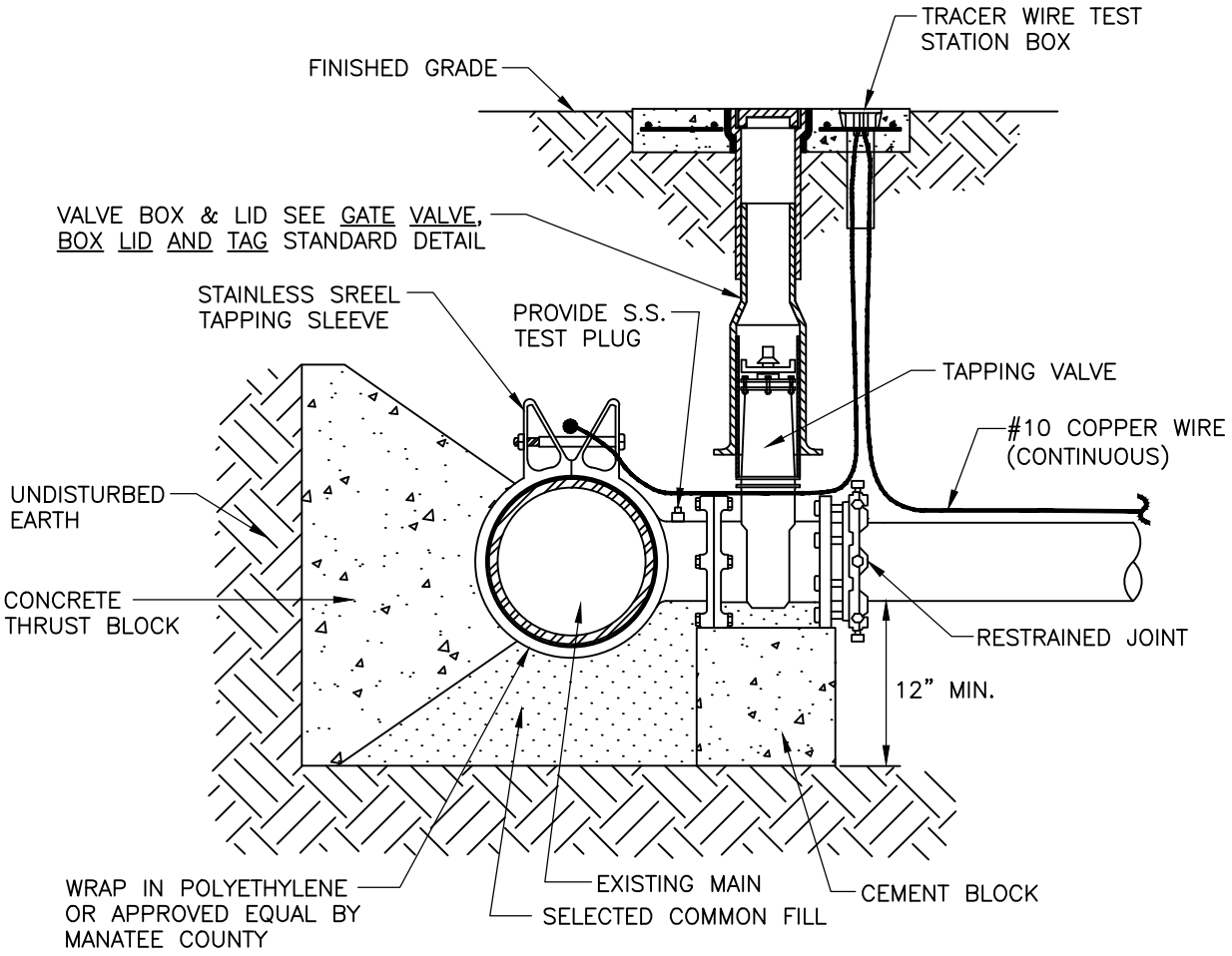

ELEVATION

NOTES:

1. PRIOR TO TAPPING, CONTRACTOR TO DEMONSTRATE 60 MINUTE HYDROSTATIC TEST OF THE TAPPING SLEEVE AND VALVE WITH NO LOSS OF 180 PSI PRESSURE FOR WATER AND RECLAIMED WATER OR 150 PSI FOR FORCE MAIN.
2. ALL FITTINGS TO BE WRAPPED WITH 20 MIL VISQUEEN AT THRUST BLOCK.
3. ALL TAPS ON CONCRETE WATER MAINS AND LARGER THAN 12" ARE TO BE MADE BY A MANATEE COUNTY APPROVED TAPPING COMPANY. ALL MATERIALS TO BE SUPPLIED BY THE CONTRACTOR.
4. ALL TAPS MUST BE OF A SMALLER SIZE THAN THE MAIN BEING TAPPED & PLACED NO CLOSER THAN 30" OR A DISTANCE EQUAL TO (1) MAIN PIPE DIAMETER PLUS (2) TAP PIPE DIAMETERS (WHICHEVER IS GREATER) FROM A JOINT OR FITTING.
5. CONTRACTOR TO SUPPLY A DRY HOLE FOR TAPPING CREW TO WORK IN AND A BACK-HOE TO LOWER TAPPING MACHINE INTO THE HOLE.
6. WHERE THRUST BLOCK NOT USED, RESTRAINED JOINTS MUST THEN EXTEND FROM TEE FULL LENGTH SPECIFIED FOR "TEES."
7. TRACER WIRE TEST STATION BOX IS REQUIRED AT CONNECTIONS TO EXISTING MAINS.

MANATEE COUNTY PUBLIC WORKS DEPARTMENT			TAPPING SLEEVE AND VALVE	UW-4
REV.BY	DATE			
CLB/KE	11/10	MAY 10, 2011 DATE OF APPROVAL		

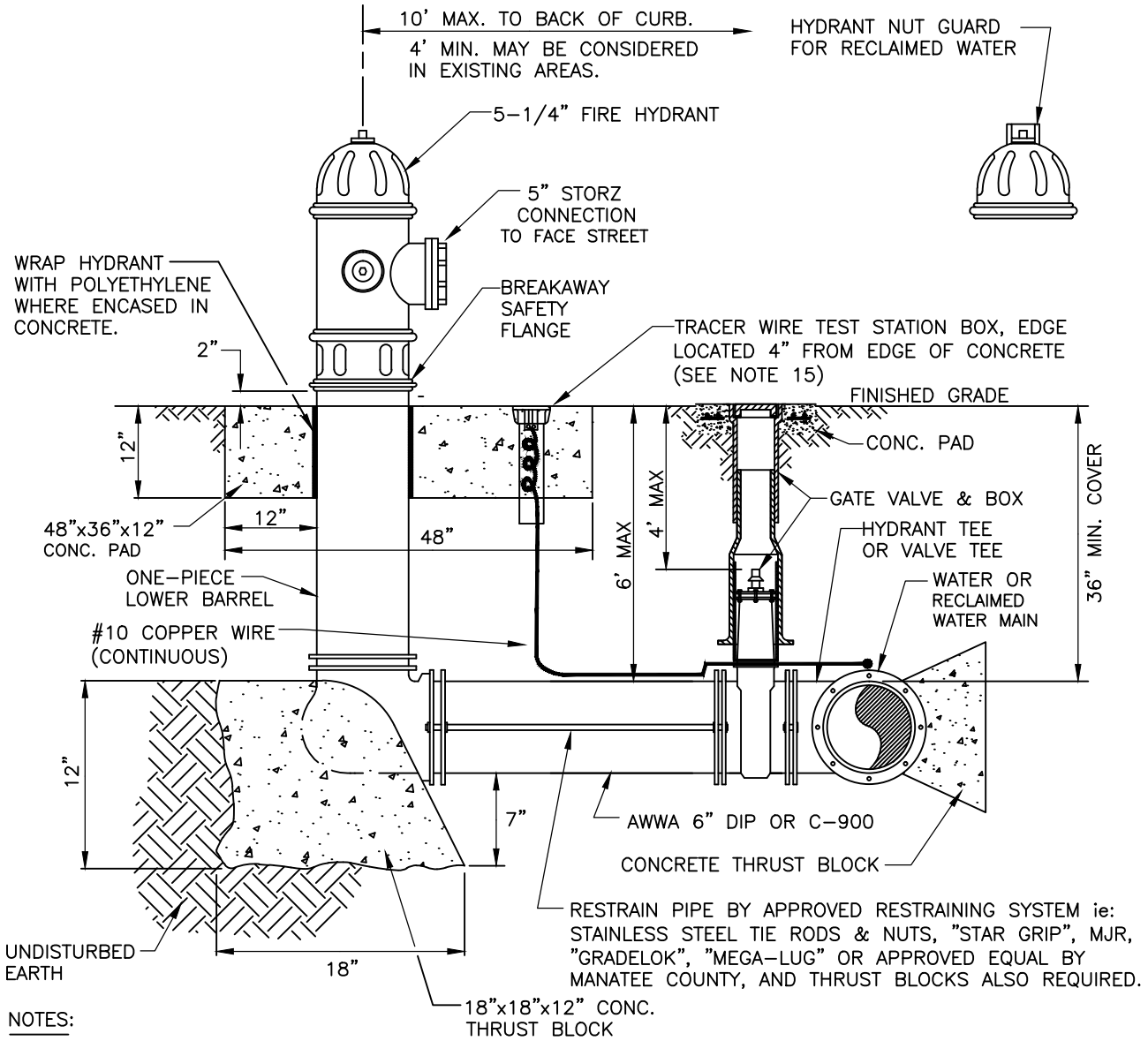

NOTES:

1. WEEPHOLES SHALL BE EXCLUDED FROM THE FIRE HYDRANT.
2. FIRE HYDRANTS SHALL BE A MINIMUM OF 6' OFF EDGE OF PAVEMENT AND 10' MAX. FROM BACK OF CURB. WHERE POSSIBLE AND WHERE SIDEWALK IS TO BE INSTALLED, FIRE HYDRANT SHALL BE LOCATED BETWEEN SIDEWALK AND RIGHT-OF-WAY LINE.
3. HYDRANTS SHALL BE FUSION BONDED EPOXY COATED SAFETY YELLOW FOR WATER AND PURPLE (PANTONE 522C) FOR RECLAIMED WATER. HYDRANT SHALL BE DUCTILE IRON CONSTRUCTION.
4. FIRE HYDRANTS SHALL BE PLACED SO THAT STORM WATER FLOWS AWAY FROM THE HYDRANT.
5. FIRE HYDRANTS SHALL BE CONSTRUCTED WITH "GROUND LINE" SET TO FINISHED GRADES AS ESTABLISHED IN THE FIELD. NORMAL BURY IS 3 FEET OF COVER FOR ALL WATER LINES.
6. FIRE HYDRANTS MAY BE CONSTRUCTED WITH "GRADELOK" OFFSET FITTING.
7. RAISED REFLECTIVE PAVEMENT MARKER (BLUE) FOR POTABLE WATER (PURPLE) FOR RECLAIMED WATER. SHALL BE INSTALLED AT CENTERLINE OF PAVEMENT ADJACENT TO EACH HYDRANT.
8. PRECAST CONCRETE THRUST BLOCKS & PADS SHALL NOT BE USED.
9. ALL EXPOSED EDGES OF CONCRETE SHALL HAVE 1/2" CHAMFER.
10. FIRE HYDRANT VALVE SHALL BE FASTENED DIRECTLY TO TEE.
11. IN-LINE VALVES SHOULD BE LOCATED AT HYDRANT TEES.
12. HYDRANTS SHALL BE LOCATED ON SAME SIDE OF ROAD AS WATER MAIN UNLESS OTHERWISE APPROVED.
13. THERE MUST BE A CLEARANCE OF 7 1/2 FEET FROM FRONT AND BOTH SIDES, AND FOUR FEET TO THE REAR OF THE HYDRANT, TO ABOVE GRADE OBSTRUCTIONS INCLUDING POSTS, FENCES, TREES, ETC, PER THE FLORIDA FIRE PREVENTION CODE.
14. SEE STANDARD DETAIL GATE VALVE, BOX, LID AND TAG.
15. SHOULD THE FIRE HYDRANT'S CONCRETE PAD OVERLAP THE SIDEWALK, THE TRACER WIRE TEST STATION BOX SHALL NOT BE LOCATED WITHIN THE SIDEWALK.

MANATEE COUNTY PUBLIC WORKS DEPARTMENT			FIRE HYDRANT ASSEMBLY	UW-5
REV.BY	DATE			
CLB/KE	11/10	MAY 10, 2011 DATE OF APPROVAL		

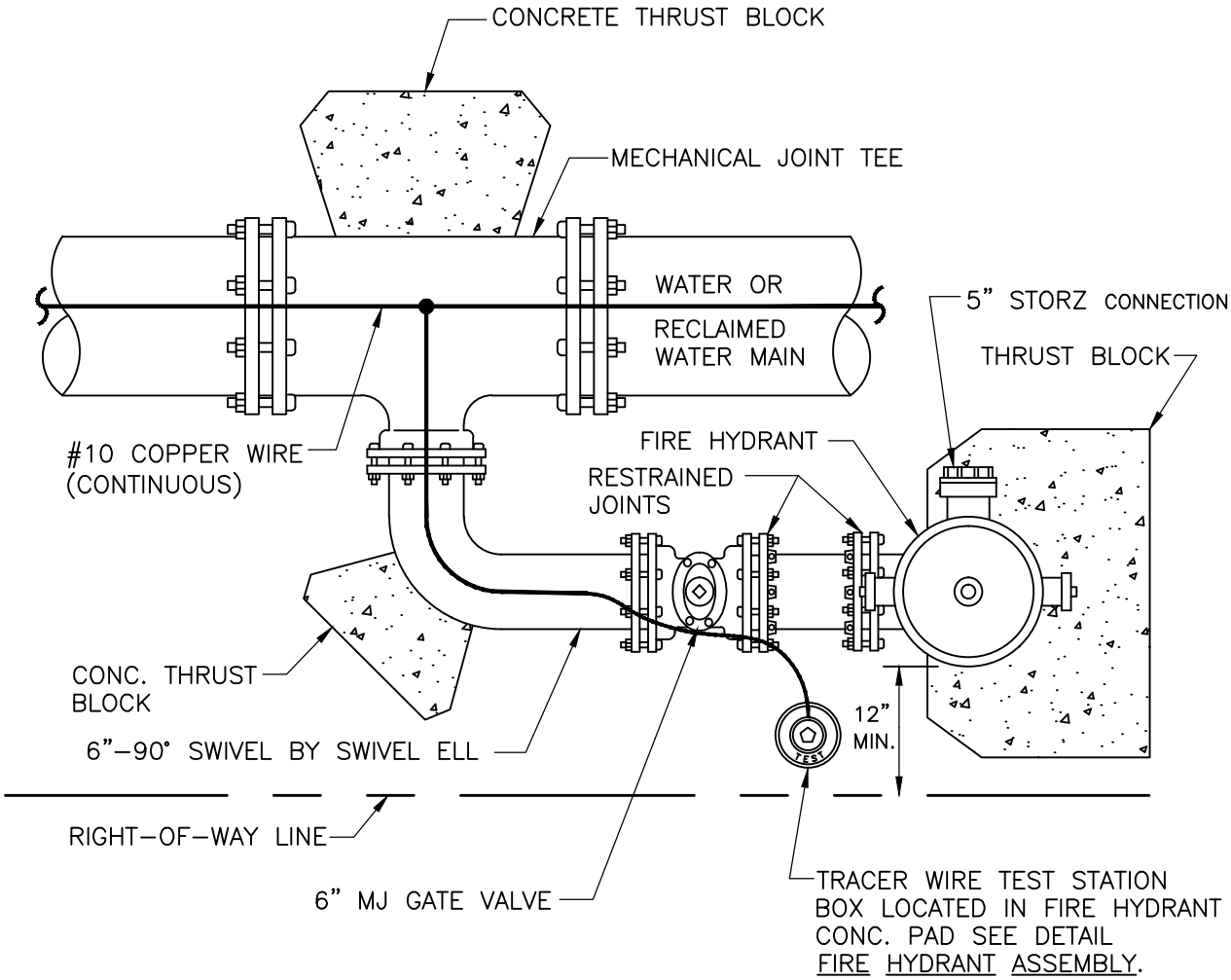

PLAN

NOTE:

1. THIS DETAIL FOR USE ONLY WHEN THE WATER MAIN IS LOCATED TOO CLOSE TO THE RIGHT-OF-WAY LINE TO USE THE FIRE HYDRANT ASSEMBLY DETAIL.
2. SEE STANDARD DETAIL GATE VALVE, BOX, LID AND TAG.

MANATEE COUNTY PUBLIC WORKS DEPARTMENT				
REV.BY	DATE		FIRE HYDRANT WITH LOCKED 90° BEND	UW-6
CLB/KE	11/10	MAY 10, 2011 DATE OF APPROVAL		

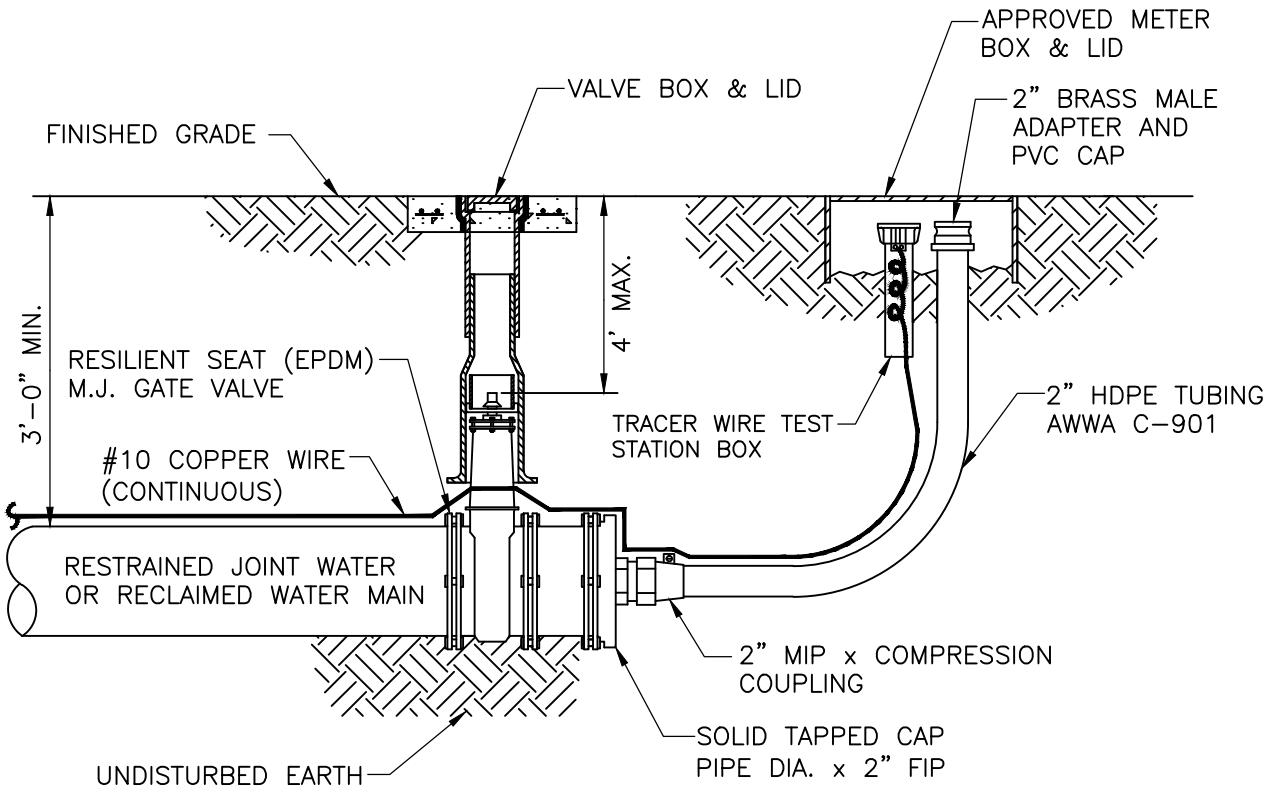

NOTE:

1. SEE STANDARD DETAIL GATE VALVE, BOX, LID AND TAG.

MANATEE COUNTY PUBLIC WORKS DEPARTMENT			2" BLOW-OFF ASSEMBLY FOR 10" MAINS AND SMALLER	UW-7
REV.BY	DATE			
CLB/KE	11/10	MAY 10, 2011 DATE OF APPROVAL		

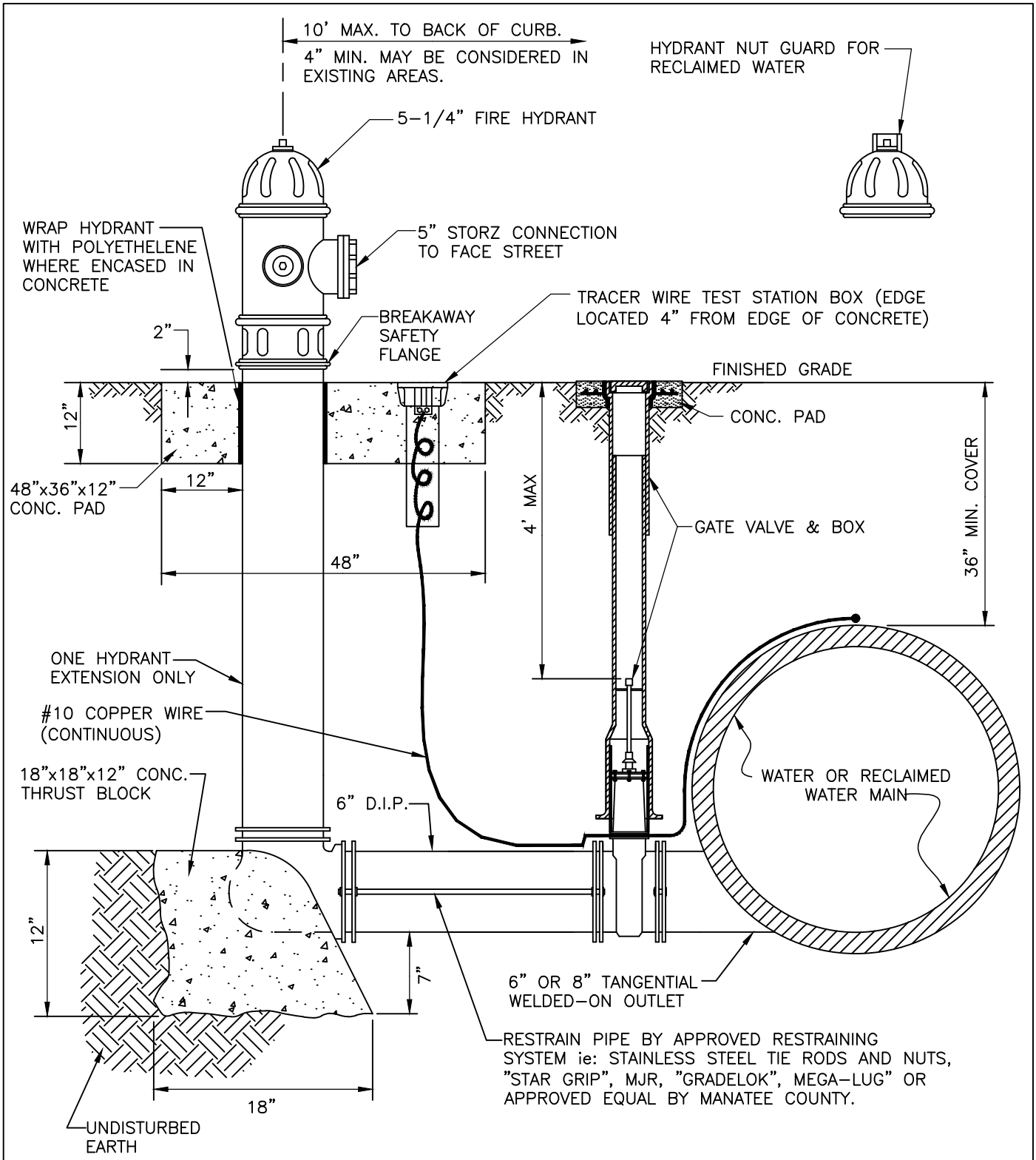

NOTES:

1. FIRE HYDRANT BLOW-OFF ASSEMBLY TO COMPLY WITH NOTES 1-15 OF THE FIRE HYDRANT ASSEMBLY DETAIL.
2. TYPICAL LOCATION FOR TANGENTAL OUTLET IS AT LOW POINT ALONG THE MAIN WHERE SEDIMENTS ACCUMULATE.
3. SEE GATE VALVE, BOX, LID AND TAG DETAIL.

MANATEE COUNTY PUBLIC WORKS DEPARTMENT			FIRE HYDRANT BLOW-OFF ASSEMBLY FOR 12" MAINS AND LARGER	UW-8
REV.BY	DATE			
CLB/KE	11/10	MAY 10, 2011 DATE OF APPROVAL		

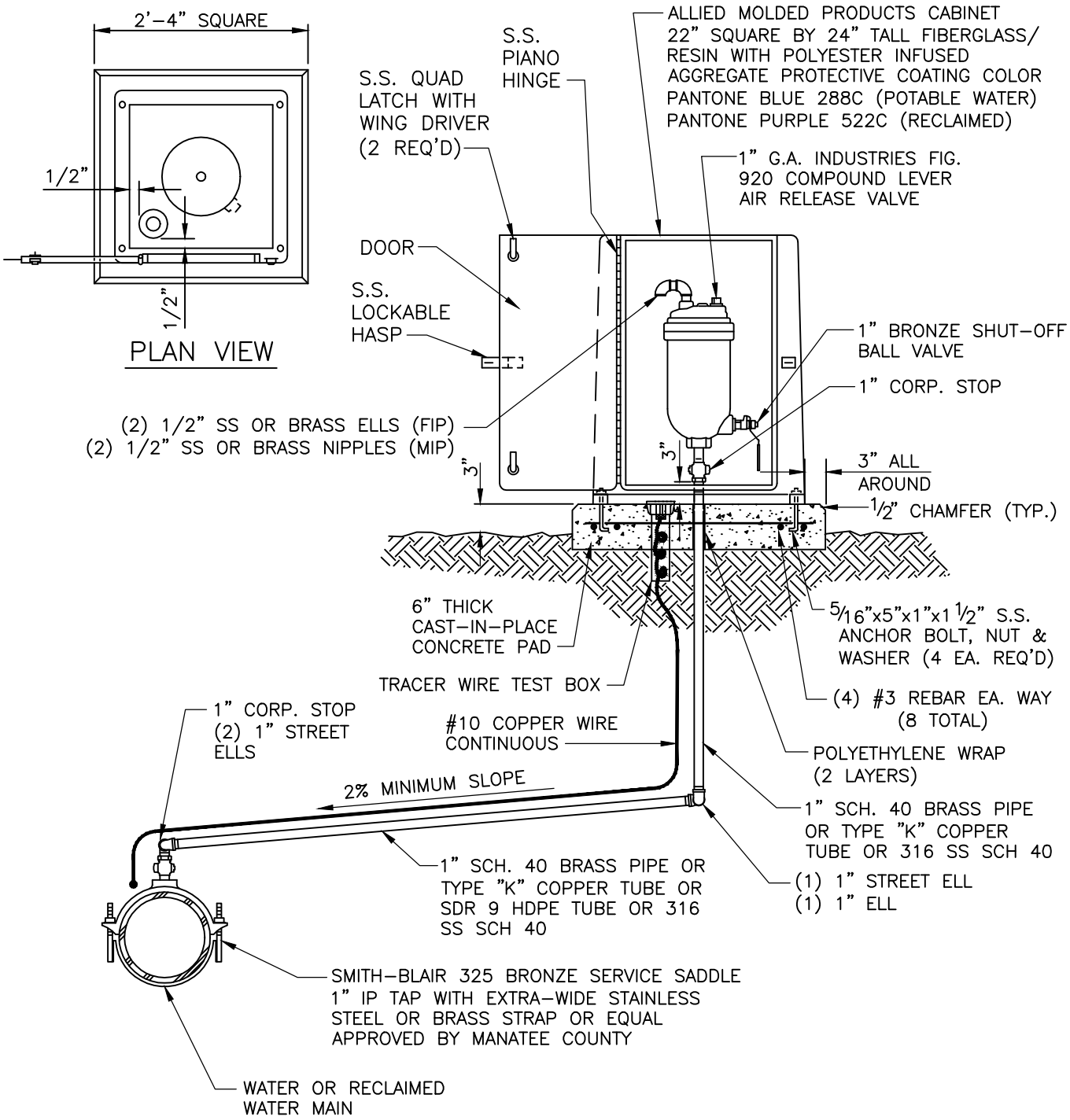

NOTES:

1. AIR RELEASE VALVES TO BE INSTALLED AT HIGH POINTS ALONG WATER MAINS WHERE SPECIFICALLY INDICATED ON THE PLAN.
2. ARV VENT ORIFICE TO BE SIZED IN ACCORDANCE WITH MANUFACTURER'S RECOMMENDATION FOR WATER MAIN SIZE.
3. ALL INCIDENTAL FITTINGS AND HARDWARE TO BE STAINLESS STEEL, BRASS OR COPPER.
4. ALL PIPE THREADS TO BE SEALED AIR TIGHT.
5. VENT PIPE TO BE LAID ACCURATELY ON SLOPE, WITHOUT HIGH OR LOW POINTS.

MANATEE COUNTY PUBLIC WORKS DEPARTMENT			ABOVE-GROUND AIR RELEASE VALVE ASSY. FOR 12-INCH AND SMALLER WATER MAINS	UW-9
REV.BY	DATE			
CLB/KE	11/10	MAY 10, 2011 DATE OF APPROVAL		

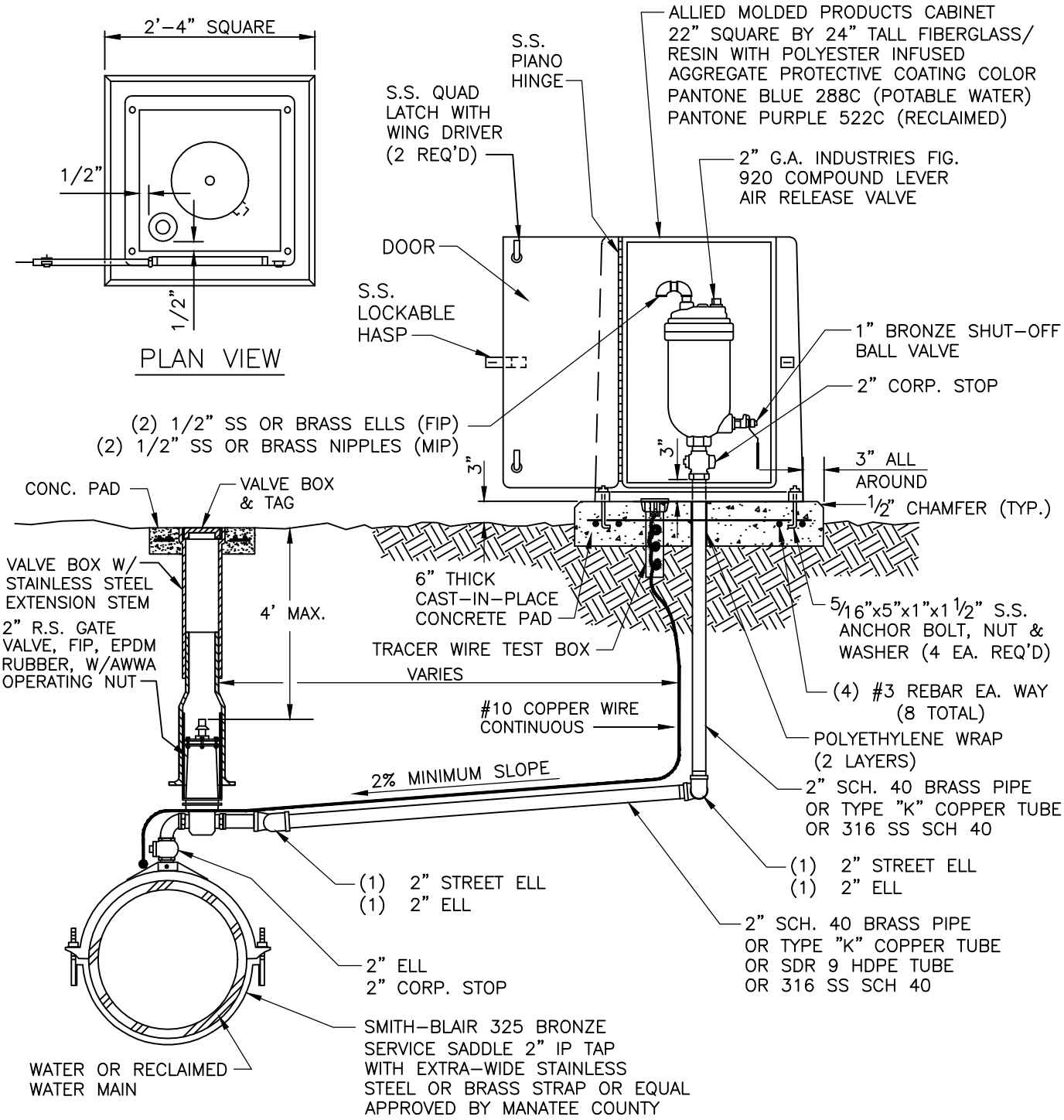

NOTES:

1. AIR RELEASE VALVES TO BE INSTALLED AT HIGH POINTS ALONG WATER MAINS WHERE SPECIFICALLY INDICATED ON THE PLAN.
2. ARV VENT ORIFICE TO BE SIZED IN ACCORDANCE WITH MANUFACTURER'S RECOMMENDATION FOR WATER MAIN SIZE.
3. ALL INCIDENTAL FITTINGS AND HARDWARE TO BE STAINLESS STEEL, BRASS OR COPPER.
4. ALL PIPE THREADS TO BE SEALED AIR TIGHT.
5. VENT PIPE TO BE LAID ACCURATELY ON SLOPE, WITHOUT HIGH OR LOW POINTS.
6. SEE GATE VALVE, BOX, LID AND TAG STANDARD DETAIL. CENTERING COLLAR IS NOT REQUIRED ON 2" GATE VALVES.

MANATEE COUNTY PUBLIC WORKS DEPARTMENT			AIR RELEASE ASSEMBLY FOR 16-INCH AND LARGER MAINS	UW-10
REV.BY	DATE			
CLB/KE	11/10	MAY 10, 2011 DATE OF APPROVAL		PAGE 128

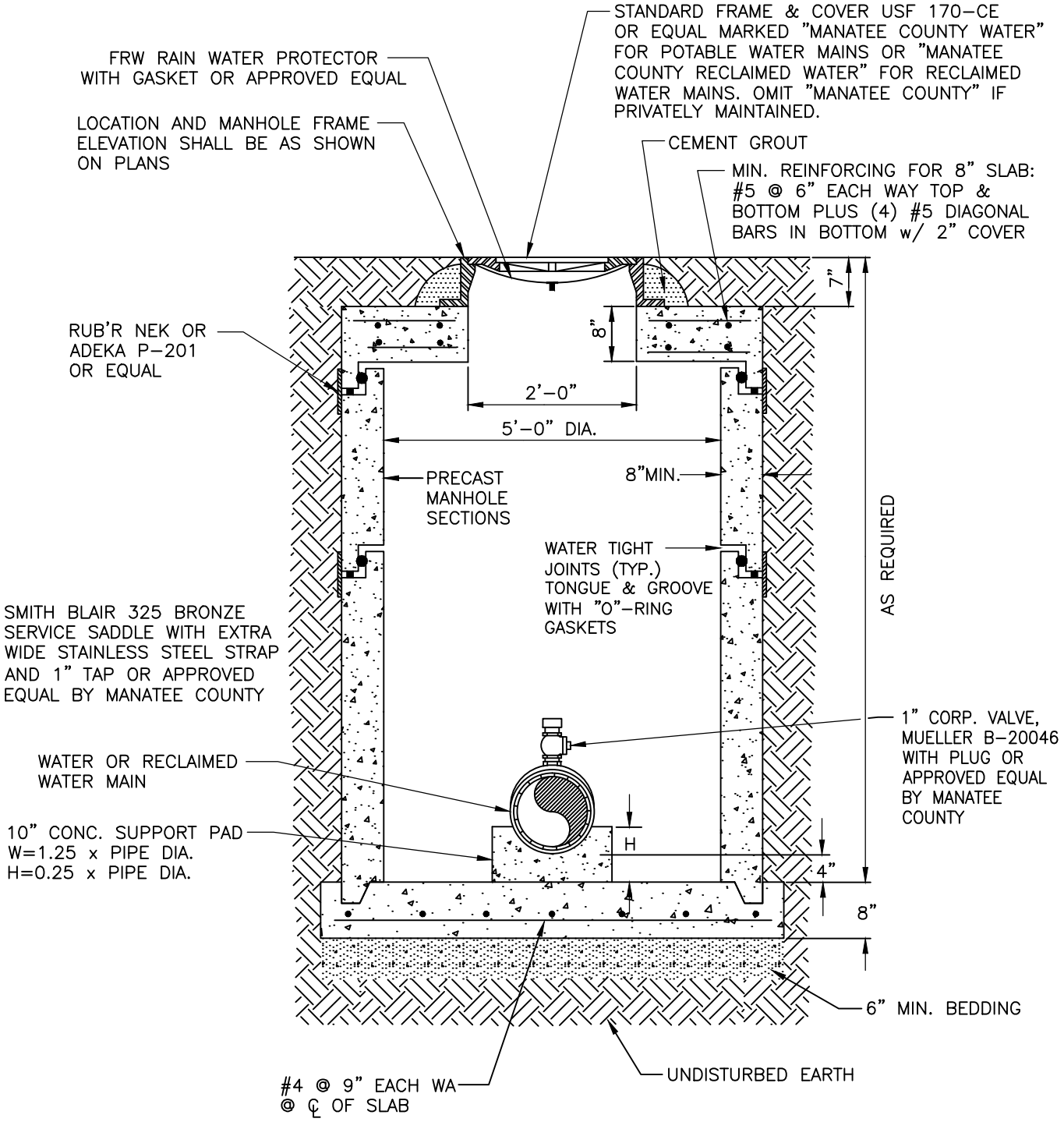

NOTES:

1. AUTOMATIC AIR RELEASE VALVES SHALL NOT BE INSTALLED BELOW GRADE.
2. SADDLE STRAPS, NUTS, BOLTS AND WASHERS TO BE STAINLESS STEEL.
3. MANUALLY OPERATED AIR RELEASE VALVES TO BE INSTALLED AT HIGH POINTS OF MAIN WHERE SPECIFICALLY INDICATED ON THE PLANS.
4. ALL PIPE PENETRATING MANHOLE SHALL HAVE RESILIENT PIPE TO MANHOLE SEALS PER ASTM C-923, XP BY A-LOK OR EQUAL.

MANATEE COUNTY PUBLIC WORKS DEPARTMENT			BELOW GRADE MANUALLY OPERATED AIR RELEASE VALVE	UW-11
REV.BY	DATE			
CLB/KE	11/10			
		MAY 10, 2011 DATE OF APPROVAL		PAGE 129

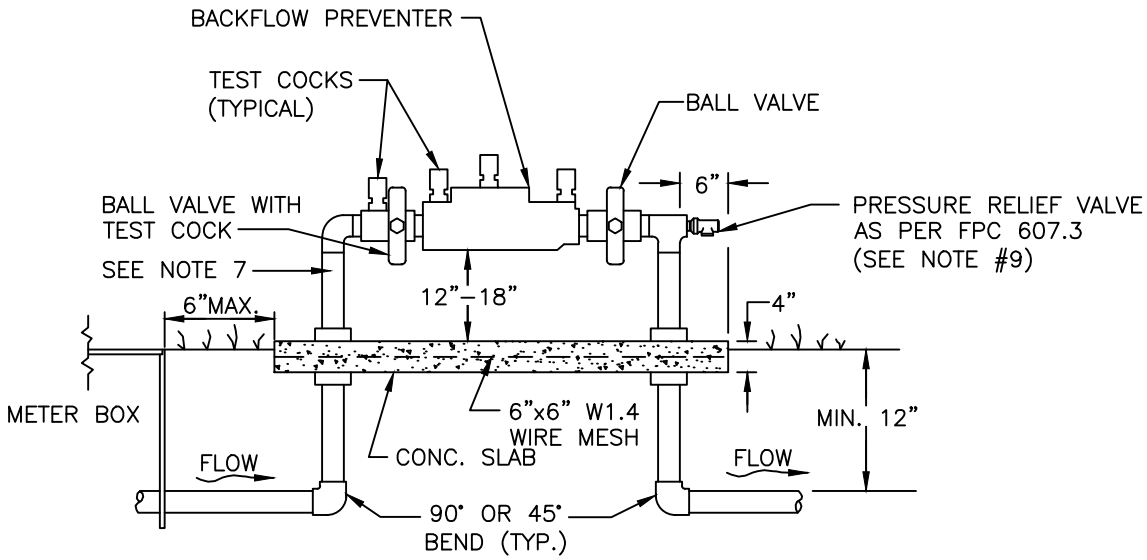

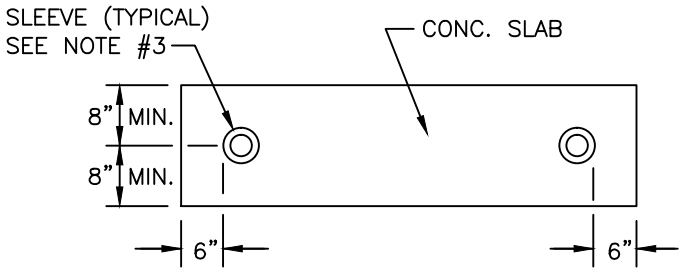

NOTES:

1. BACKFLOW DEVICE MUST BE INSTALLED IMMEDIATELY DOWNSTREAM OF METER, AS SHOWN ABOVE
2. COPPER PIPE TYPE "K" OR BRASS PIPE MINIMUM SCHEDULE 40 SHALL BE USED TO A MINIMUM DEPTH OF 12" BELOW GRADE.
3. PIPES PASSING THROUGH OR ENCASED IN CONCRETE MUST BE PROPERLY PROTECTED AND SLEEVED.
4. THE SYSTEM MUST MEET ALL REQUIREMENTS OF THE FLORIDA PLUMBING CODE (LATEST EDITION) AND THE MANATEE COUNTY BACKFLOW PREVENTION ORDINANCE (LATEST EDITION).
5. ALL EXPOSED EDGES OF CONCRETE SHALL BE CHAMFERED 1/2".
6. BACKFLOW PREVENTER SHALL BE TESTED AT THE TIME OF INSTALLATION.
7. PRESSURE REDUCING VALVE REQUIRED UPSTREAM OF BACKFLOW IF SYSTEM PRESSURE EXCEEDS 80 PSI.
8. 3' MINIMUM CLEARANCE FROM LANDSCAPING PLANTS TO EDGE OF CONCRETE SLAB AND CLEAR OPENING FOR ACCESS FROM STREET.
9. IN ADDITION TO THE PRV, THE BUILDING DEPT. MAY REQUIRE AN APPROVED DEVICE FOR THERMAL EXPANSION CONTROL.
10. REFER TO DETAIL WATER METER & BACKFLOW PREVENTER FOR LIFT STATIONS FOR WATER SERVICE AT SEWAGE PUMPING STATION.

MANATEE COUNTY PUBLIC WORKS DEPARTMENT			3/4" & 1" BACKFLOW PREVENTER	UW–12
REV.BY	DATE			
CLB/BR	11/10	MAY 10, 2011 DATE OF APPROVAL		PAGE 130

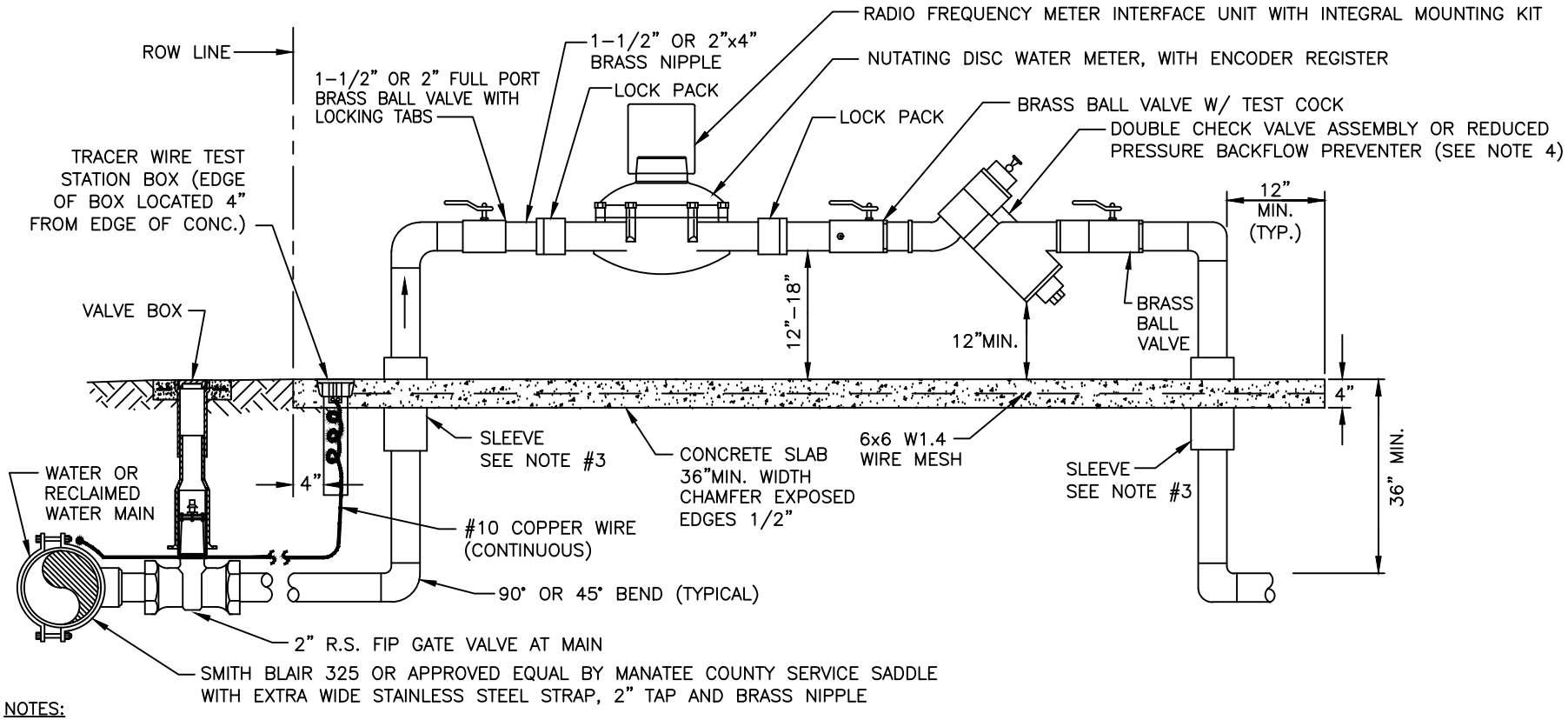

NOTES:

1. BACKFLOW DEVICE MUST BE INSTALLED DOWNSTREAM OF METER, AS CLOSE TO METER AS POSSIBLE.
2. COPPER PIPE TYPE "K" OR BRASS PIPE MINIMUM SCHEDULE 40 SHALL BE USED TO A MINIMUM DEPTH OF 36" BELOW GRADE.
3. PIPES PASSING THROUGH OR ENCASED IN CONCRETE MUST BE PROPERLY PROTECTED AND SLEEVED.
4. THE SYSTEM MUST MEET ALL REQUIREMENTS OF THE FLORIDA PLUMBING CODE (LATEST EDITION) AND THE MANATEE COUNTY BACKFLOW PREVENTION ORDINANCE (LATEST EDITION).
5. METER, LOCK PACKS AND BRASS NIPPLES WILL BE PROVIDED BY MANATEE COUNTY. INSERT NIPPLES INTO LOCK PACKS HALF WAY.
6. DO NOT PAINT METER OR LOCK PACKS. ALL ABOVE GROUND PIPING SHALL BE PAINTED SAFETY BLUE (POTABLE WATER) OR PANTONE PURPLE 522C (RECLAIMED WATER).
7. FOR USE WHERE BACKFLOW PREVENTER IS REQUIRED WITH METER.
8. 3' MINIMUM CLEARANCE FROM LANDSCAPING PLANTS TO EDGE OF THE METER AND CLEAR OPENING FOR ACCESS FROM STREET.
9. BACKFLOW PREVENTER IS ONLY REQUIRED ON RECLAIMED WATER LINE WHEN IRRIGATION SYSTEM INCLUDES CHEMICAL OR FERTILIZER INJECTION METHODS. WHEN BACKFLOW PREVENTION ASSEMBLY IS NOT REQUIRED, A 12" MINIMUM NIPPLE AND A BALL VALVE SHALL BE INSTALLED.
10. ALL ANCILLARY BOLTS & FASTENERS TO BE STAINLESS STEEL.
11. SEE GATE VALVE, BOX, LID AND TAG DETAIL. CENTERING COLLAR NOT REQUIRED ON 2" OR SMALLER VALVES.

REV.BY	DATE
CLB/BR	11/10

MANATEE COUNTY
PUBLIC WORKS DEPARTMENT

MAY 10, 2011
DATE OF APPROVAL

$1\frac{1}{2}$" & 2" METER AND BACKFLOW PREVENTER

UW-13

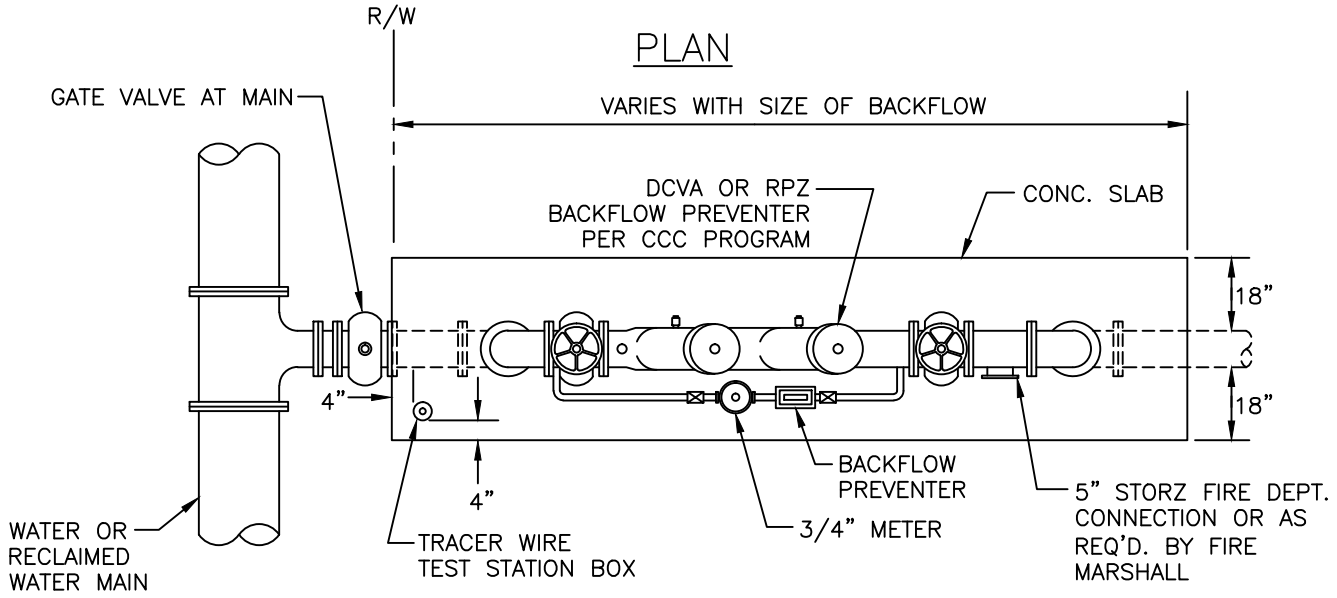

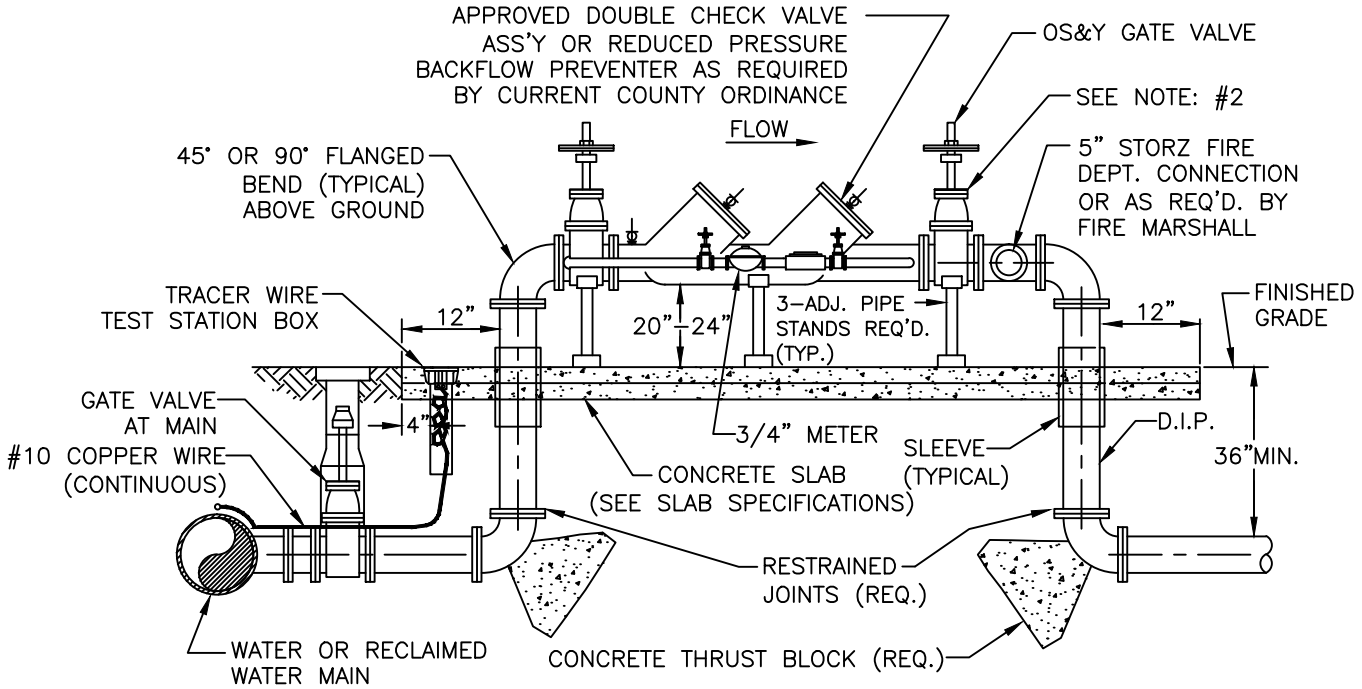

SECTION

NOTES:

1. THIS DETAIL FOR FIRE PROTECTION ONLY.
2. WHEN PRESSURE TESTING FIRE LINE, TEST AGAINST DOWNSTREAM GATE VALVE.
3. THE SYSTEM MUST MEET ALL REQUIREMENTS OF THE FLORIDA PLUMBING CODE (LATEST EDITION), THE MANATEE COUNTY BACKFLOW PREVENTION ORDINANCE (LATEST EDITION) AND THE MANATEE COUNTY FIRE MARSHALL REQUIREMENTS.
4. ABOVE GROUND PIPING SHALL BE FLANGED DUCTILE IRON CLASS 53 AND PAINTED RED.
5. ALL EXPOSED EDGES OF CONCRETE SHALL HAVE 1/2" CHAMFER.
6. LANDSCAPE VEGETATION SHALL BE 6 FEET MIN. FROM EDGE OF CONCRETE SLAB. STREET SIDE OF ASSEMBLY SHALL REMAIN OPEN.
7. ALL ANCILLARY BOLTS & FASTENERS TO BE STAINLESS STEEL.
8. SEE GATE VALVE, BOX, LID AND TAG DETAIL.
9. PIPE STANDS SHALL BE BOLTED TO SLAB.

SLAB SPECIFICATIONS

PIPE DIAMETER	SLAB THICKNESS	REINFORCEMENT
3" TO 10"	4"	6x6 W1.4 WIRE MESH
12" TO 18"	4"	6x6 W3 WIRE MESH

MANATEE COUNTY
PUBLIC WORKS DEPARTMENT

REV.BY	DATE
CLB/BR	11/10

MAY 10, 2011
DATE OF APPROVAL

3" AND ABOVE FIRE LINE BACKFLOW PREVENTER

UW-14

REV.BY	DATE
CLB/KE	11/10

MANATEE COUNTY
PUBLIC WORKS DEPARTMENT

MAY 10, 2011
DATE OF APPROVAL

3" AND ABOVE MASTER METER

UW-15

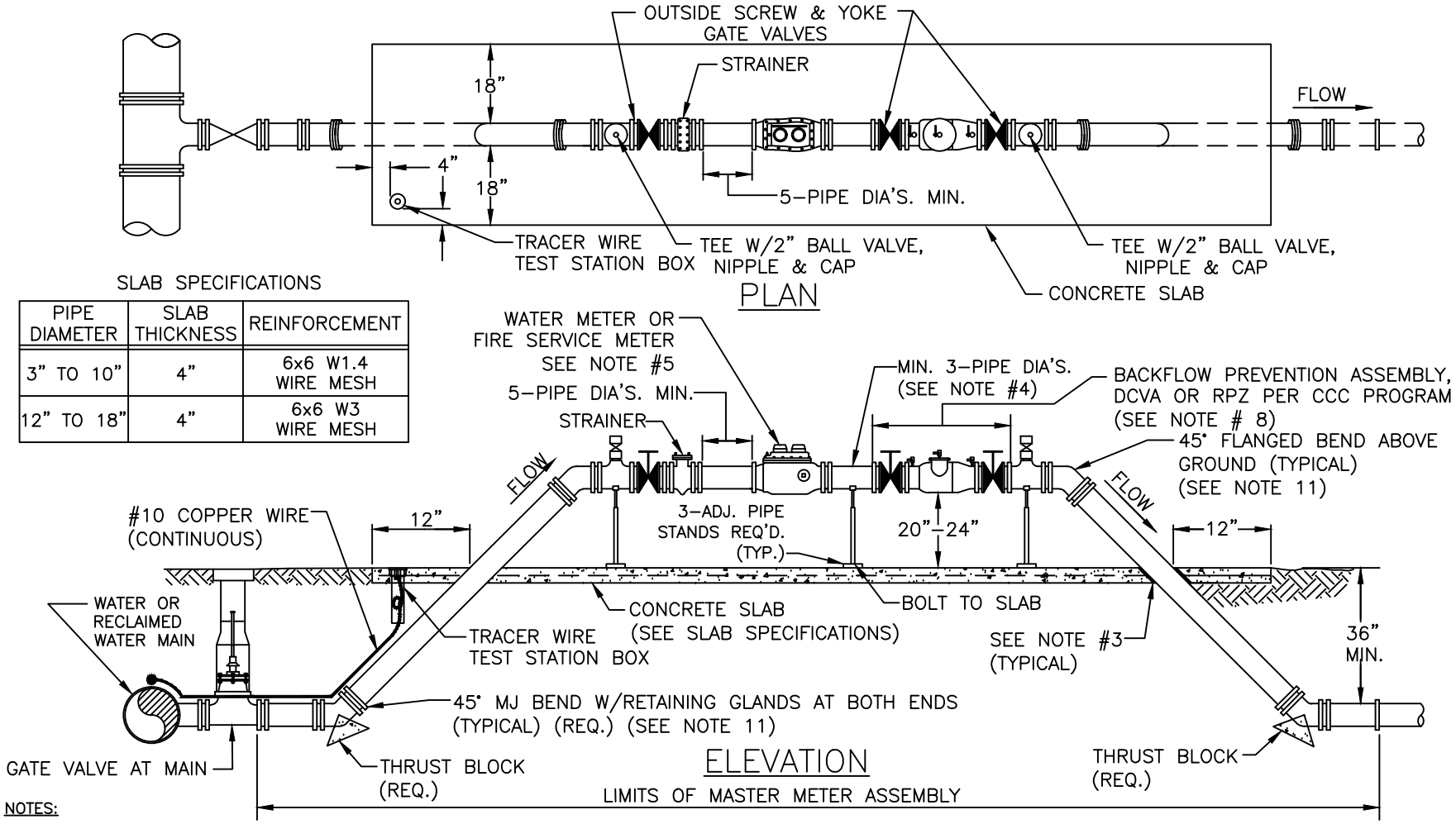

SLAB SPECIFICATIONS

PIPE DIAMETER	SLAB THICKNESS	REINFORCEMENT
3" TO 10"	4"	6x6 W1.4 WIRE MESH
12" TO 18"	4"	6x6 W3 WIRE MESH

NOTES:

1. ABOVE GROUND PIPING SHALL BE FLANGED DUCTILE IRON CLASS 53, PAINTED SAFETY BLUE FOR POTABLE WATER OR PANTONE 522C FOR RECLAIMED WATER.
2. METER ASSEMBLY SHALL BE INSTALLED LEVEL AND PRESSURE TESTED AGAINST UPSTREAM GATE VALVE.
3. PIPE THROUGH SLAB AND ALL BELOW GROUND D.I. PIPE AND FITTINGS SHALL BE POLYETHYLENE WRAPPED.
4. TEE BETWEEN METER AND BACKFLOW IS REQUIRED ON TURBINE METERS. TEE IS NOT REQUIRED ON COMPOUND METERS.
5. FIRE SERVICE METER TO BE USED ONLY WHEN POTABLE WATER AND FIRE PROTECTION ARE SUPPLIED THROUGH A SINGLE POTABLE WATER LINE.
6. ALL EXPOSED EDGES OF CONCRETE SHALL HAVE 1/2" CHAMFER.
7. LANDSCAPE VEGETATION SHALL BE 10'-0" MIN. FROM METER & ABOVE GROUND PIPING. STREET SIDE OF ASSEMBLY SHALL REMAIN OPEN.
8. BACKFLOW PREVENTER IS NOT REQUIRED ON RECLAIMED WATER MASTER METER ASSEMBLY, EXCEPT WHERE FERTILIZER OR CHEMICAL INJECTION METHODS WILL BE IN USE.
9. ALL ANCILLARY BOLTS & FASTENERS SHALL BE STAINLESS STEEL.
10. BALL VALVES SHALL BE FULL PORT WITH LOCKING TABS.
11. SHOULD THERE BE INSUFFICIENT ROOM TO INSTALL THE METER ASSEMBLY, 90° BENDS AND TEES MAY BE USED AS SHOWN IN REPLACEMENT FOR 3" AND ABOVE MASTER METER
12. COUNTY WILL PROVIDE STRAINER AND METER. ALL OTHER VALVES, PIPE, FITTINGS AND BACKFLOW PREVENTER TO BE PROVIDED BY SITE CONTRACTOR.

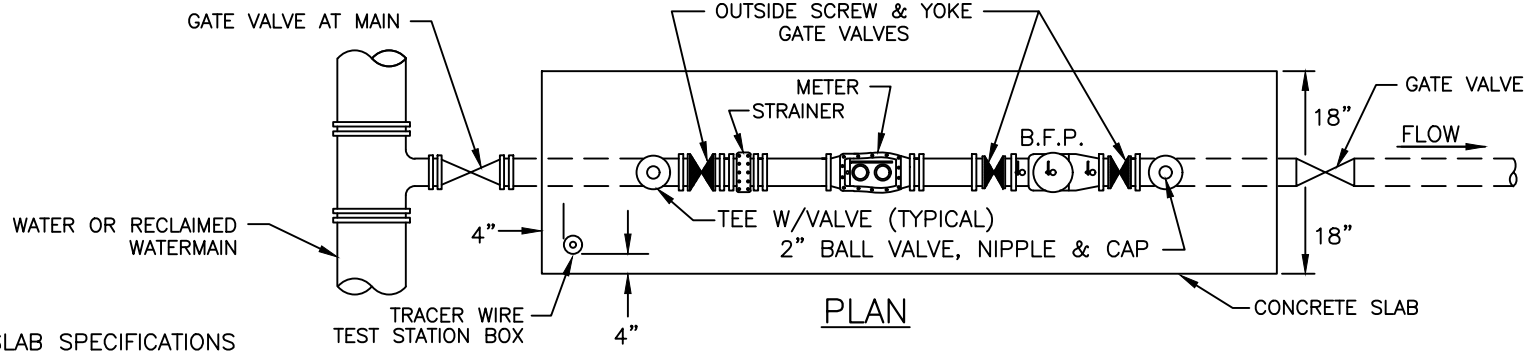

PLAN

SLAB SPECIFICATIONS

PIPE DIAMETER	SLAB THICKNESS	REINFORCEMENT
3" TO 10"	4"	6x6 W1.4 WIRE MESH
12" TO 18"	4"	6x6 W3 WIRE MESH

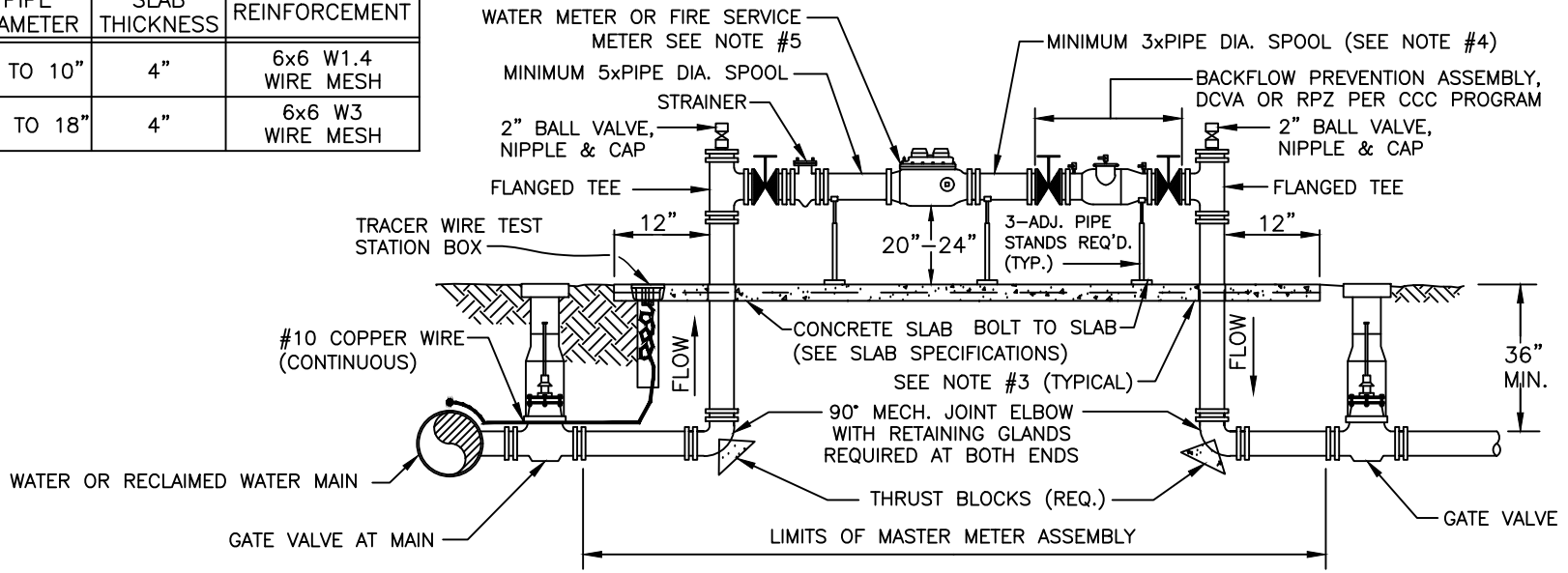

ELEVATION

NOTES:

1. ABOVE GROUND PIPING SHALL BE FLANGED DUCTILE IRON CLASS 53, PAINTED SAFETY BLUE FOR POTABLE WATER OR PANTONE 522C PURPLE FOR RECLAIMED WATER.
2. METER ASSEMBLY SHALL BE INSTALLED LEVEL AND PRESSURE TESTED AGAINST UPSTREAM GATE VALVE.
3. PIPE THROUGH SLAB AND ALL BELOW GROUND D.I. PIPE AND FITTINGS SHALL BE POLYETHYLENE WRAPPED.
4. TEE BETWEEN METER AND BACKFLOW IS REQUIRED ON TURBINE METERS. TEE IS NOT REQUIRED ON COMPOUND METERS. TEE SHALL HAVE 2" BALL VALVE.
5. FIRE SERVICE METER TO BE USED ONLY WHEN POTABLE WATER AND FIRE PROTECTION ARE SUPPLIED THROUGH A SINGLE POTABLE WATER LINE.
6. ALL EXPOSED EDGES OF CONCRETE SHALL HAVE 1/2" CHAMFER.
7. LANDSCAPE VEGETATION SHALL BE 10'–0" MIN. FROM METER & ABOVE GROUND PIPING. STREET SIDE OF ASSEMBLY SHALL REMAIN OPEN.
8. BACKFLOW PREVENTER IS NOT REQUIRED ON RECLAIMED WATER MASTER METER ASSEMBLY, EXCEPT WHERE FERTILIZER OR CHEMICAL INJECTION METHODS WILL BE IN USE. WHEN BACKFLOW PREVENTION ASSEMBLY IS NOT REQUIRED, A SPOOL PIECE OF SAME LAY LENGTH AND AN OS&Y VALVE SHALL BE INSTALLED.
9. ALL ANCILLARY BOLTS & FASTENERS SHALL BE STAINLESS STEEL.
10. TRACER WIRE TEST STATION BOX NOT REQUIRED FOR REPLACEMENT MASTER METER IF THE EXISTING PIPING TO THE EXISTING METER ASSEMBLY DID NOT HAVE A TRACER WIRE.
11. BALL VALVES SHALL BE FULL PORT WITH LOCKING TABS.
12. COUNTY WILL PROVIDE STRAINER AND METER. ALL OTHER VALVES, PIPE, FITTINGS AND BACKFLOW PREVENTER TO BE PROVIDED BY SITE CONTRACTOR.

REV.BY	DATE
CLB/KE	11/10

MANATEE COUNTY
PUBLIC WORKS DEPARTMENT

MAY 10, 2011
DATE OF APPROVAL

REPLACEMENT FOR 3" AND ABOVE MASTER METER

UW–16

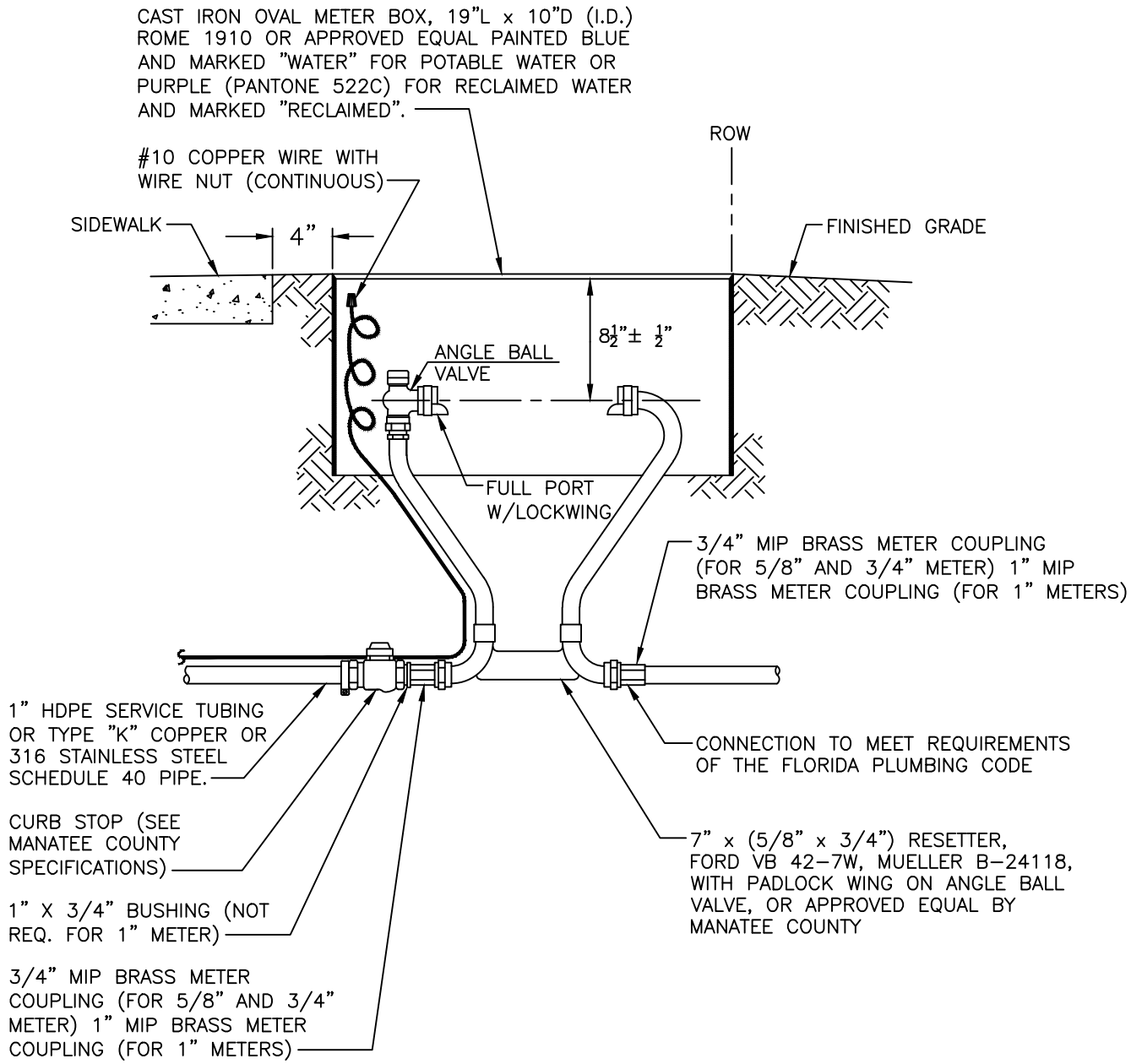

NOTES:

1. FORD 40 SERIES RESETTERS VB43 AND VB44 OR EQUAL FOR 3/4" OR 1" METERS ALSO ALLOWED.
2. METER BOX AND RESETTER ARE TO BE INSTALLED BY THE INFRASTRUCTURE CONTRACTOR AND SHALL NOT BE SET IN DRAINAGE SWALES, SIDEWALKS OR DRIVEWAYS.
3. FOR COMPLETE SERVICE CONNECTION ASSEMBLY, SEE DETAIL TYPICAL SERVICE CONNECTION.
4. WHEN THE DISTANCE BETWEEN THE EDGE OF THE SIDEWALK AND THE R/W IS ONE FOOT (CUL-DE-SAC W/ MEDIAN) A 10-FOOT-WIDE PUBLIC UTILITY EASEMENT SHALL BE LOCATED IN THE FRONT OF THE LOTS, ADJACENT TO THE ROW.
5. 3' MINIMUM CLEARANCE FROM LANDSCAPING PLANTS TO EDGE OF METER, CLEAR ACCESS OPENING TO STREET.

MANATEE COUNTY PUBLIC WORKS DEPARTMENT			METER BOX ASSEMBLY FOR 5/8" X 3/4", 3/4" & 1" METERS	UW-17
REV.BY	DATE			
CLB/BR	11/10	MAY 10, 2011 DATE OF APPROVAL		PAGE 135

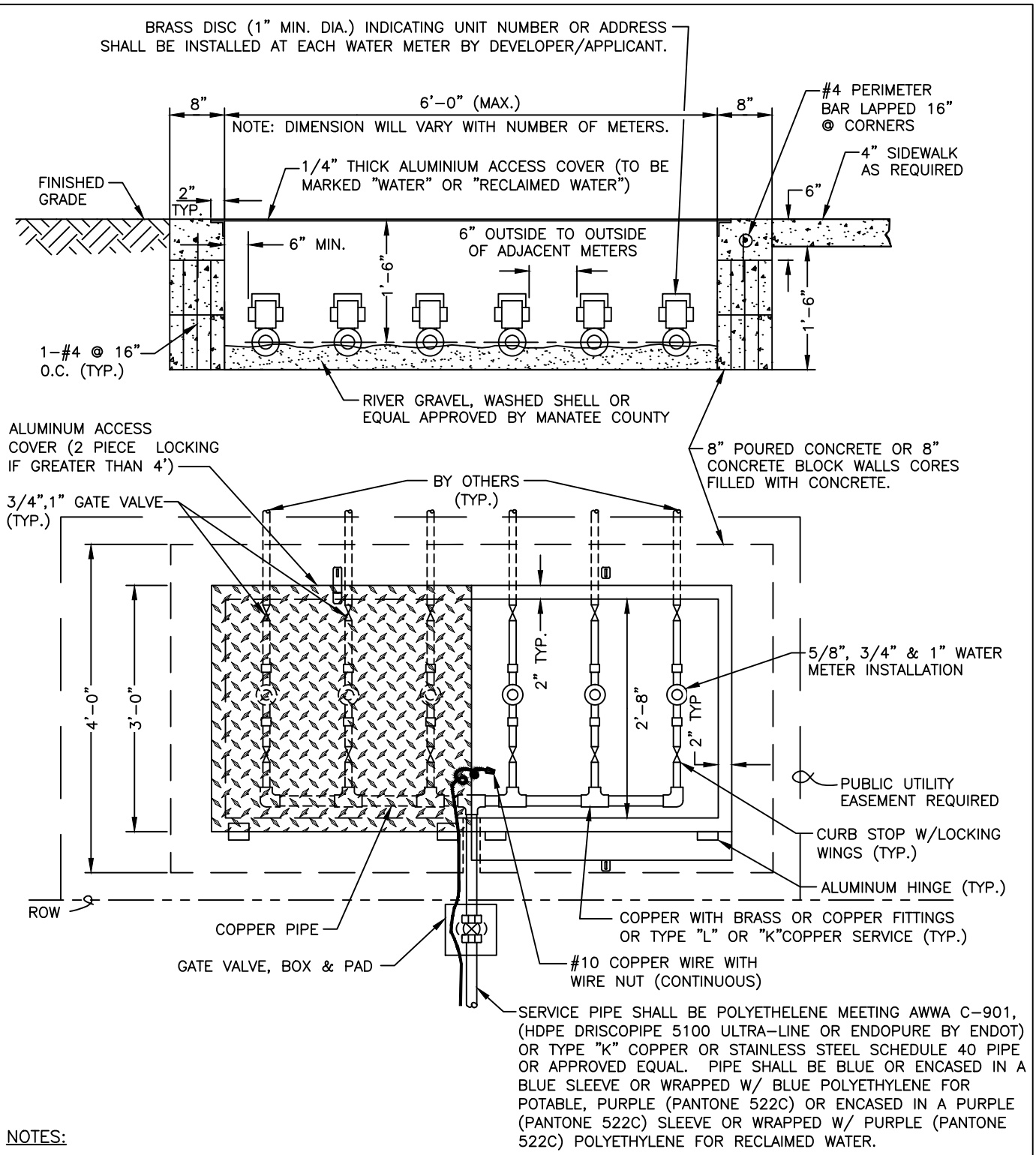

NOTES:

1. BACKFLOW PREVENTERS MAY BE REQUIRED DOWN STREAM OF METERS. IF A BACKFLOW PREVENTER IS REQUIRED, THE BASE SLAB SHALL BE INSTALLED NO GREATER THAN 6" FROM THE METER VAULT.
2. ALUMINUM ACCESS COVER SHALL HAVE RECESSED LIFTING HANDLES AND BE CAPABLE OF SUPPORTING A LOAD OF 75 P.S.F. COVER LIFTING FORCE TO BE NO MORE THAN 50 POUNDS.
3. PUBLIC UTILITY EASEMENT REQUIRED FOR METER READING AND MAINTENANCE, METER VAULT TO BE MAINTAINED BY WATER CUSTOMER.
4. SEE GATE VALVE, BOX, LID AND TAG DETAIL. CENTERING COLLAR NOT REQUIRED ON 2" GATE VALVES.

MANATEE COUNTY PUBLIC WORKS DEPARTMENT			MULTIPLE METER VAULT	UW-18
REV.BY	DATE			
CLB/BR	11/10	MAY 10, 2011 DATE OF APPROVAL		PAGE 136

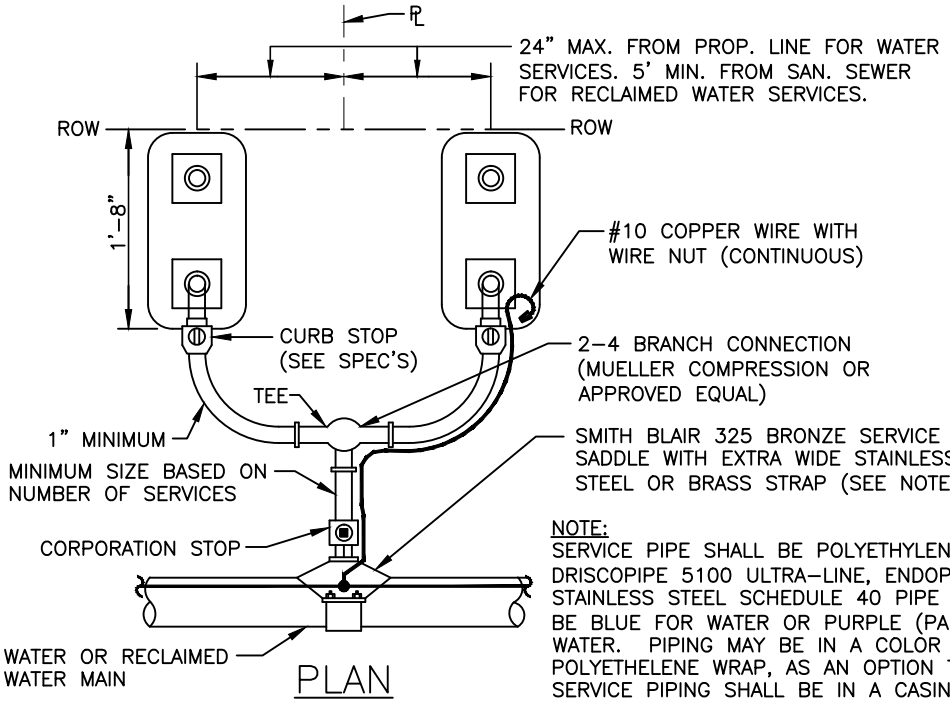

PLAN

NOTE:
SERVICE PIPE SHALL BE POLYETHYLENE MEETING AWWA C-901, POLY-E DRISCOPIPE 5100 ULTRA-LINE, ENDOPURE BY ENDOT, TYPE "K" COPPER, STAINLESS STEEL SCHEDULE 40 PIPE OR APPROVED EQUAL. PIPE SHALL BE BLUE FOR WATER OR PURPLE (PANTONE 522C) FOR RECLAIMED WATER. PIPING MAY BE IN A COLOR CODED CASING OR COLOR CODED POLYETHELENE WRAP, AS AN OPTION TO PIPE BEING COLOR CODED. ALL SERVICE PIPING SHALL BE IN A CASING AT ROADWAY CROSSINGS.

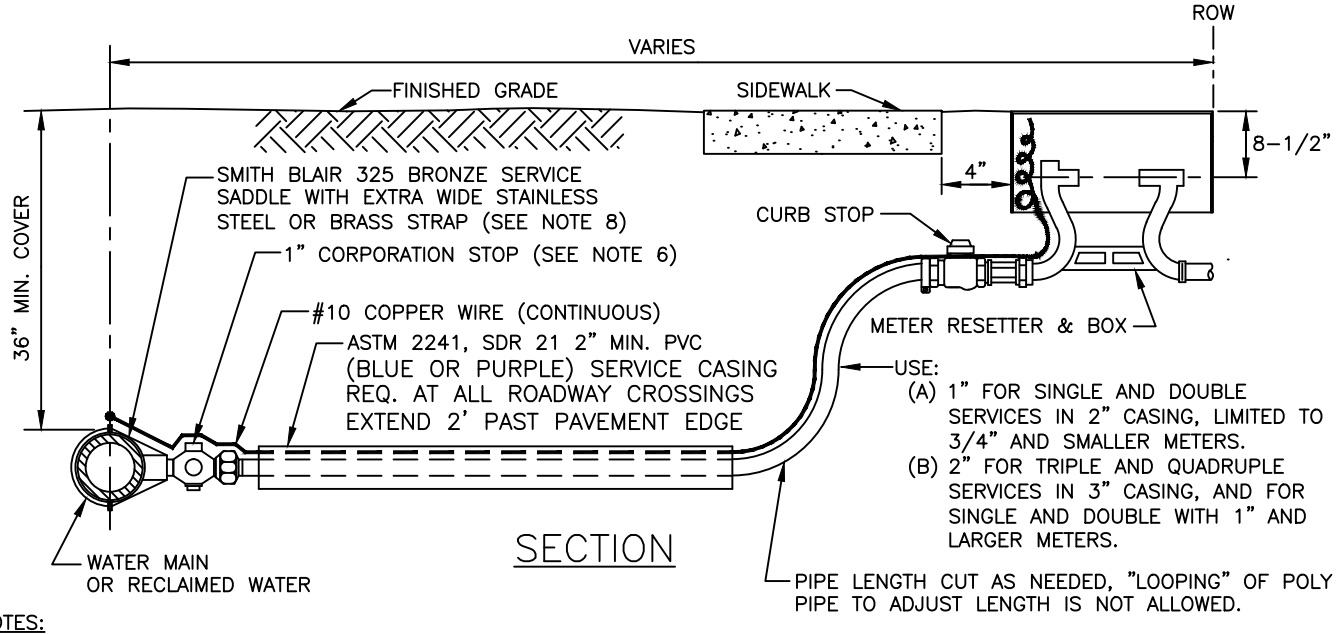

SECTION

NOTES:

1. ALL SERVICE TAPS TO BE LOCATED IN THE FIELD. TAPS SHALL BE NO CLOSER THAN 2'-0" STAGGERED INTERVALS OR WITHIN 2'-0" FROM BELL OR SPIGOT ENDS.
2. METER BOXES & RESETTERS ARE TO BE INSTALLED BY THE INFRASTRUCTURE CONTRACTOR AND SHALL NOT BE SET IN DRAINAGE SWALES, SIDEWALKS OR DRIVEWAYS.
3. "WM" OR "RWM" TO BE IMPRESSED INTO THE NEWLY POURED CONCRETE CURB ALONG WITH DISTANCE IN FEET TO THE METER. IF NO CURB, INSTALL A BLUE DISC WITH "WM" OR A PURPLE DISC WITH "RWM" AND A 1/8"x 1" GALVANIZED STEEL SCREW IN THE EDGE OF PAVEMENT WITH THE DISTANCE (IN FEET) FROM THE DISC TO THE METER.
4. #10 COPPER WIRE SHALL BE INSTALLED WITH WATER AND RECLAIMED MAIN AND ALL SERVICES. SERVICE WIRE SHALL BE CONNECTED TO THE TRACER WIRE ALONG THE MAIN.
5. WATER AND RECLAIMED WATER SERVICE LINES TO BE 5' MINIMUM FROM SEWER SERVICE PIPES.
6. FOR 2" SERVICES REPLACE CORPORATION STOP WITH 2" RESILIENT WEDGE FIP GATE VALVE W/BOX, LID & TAG.
7. WHEN THE DISTANCE BETWEEN THE EDGE OF THE SIDEWALK AND THE ROW IS ONE FOOT (CUL-DE-SAC W/MEDIAN) A 10-FOOT-WIDE PUBLIC UTILITY EASEMENT SHALL BE LOCATED IN THE FRONT OF THE LOTS, ADJACENT TO THE ROW.
8. FOR HDPE MAINS, USE ROMAC 306H SS OR CENTRAL PLASTICS ELECTRO FUSION CORP SADDLE.

MANATEE COUNTY
PUBLIC WORKS DEPARTMENT

REV.BY	DATE
CLB/BR	11/10

MAY 10, 2011
DATE OF APPROVAL

TYPICAL SERVICE CONNECTION

UW-19

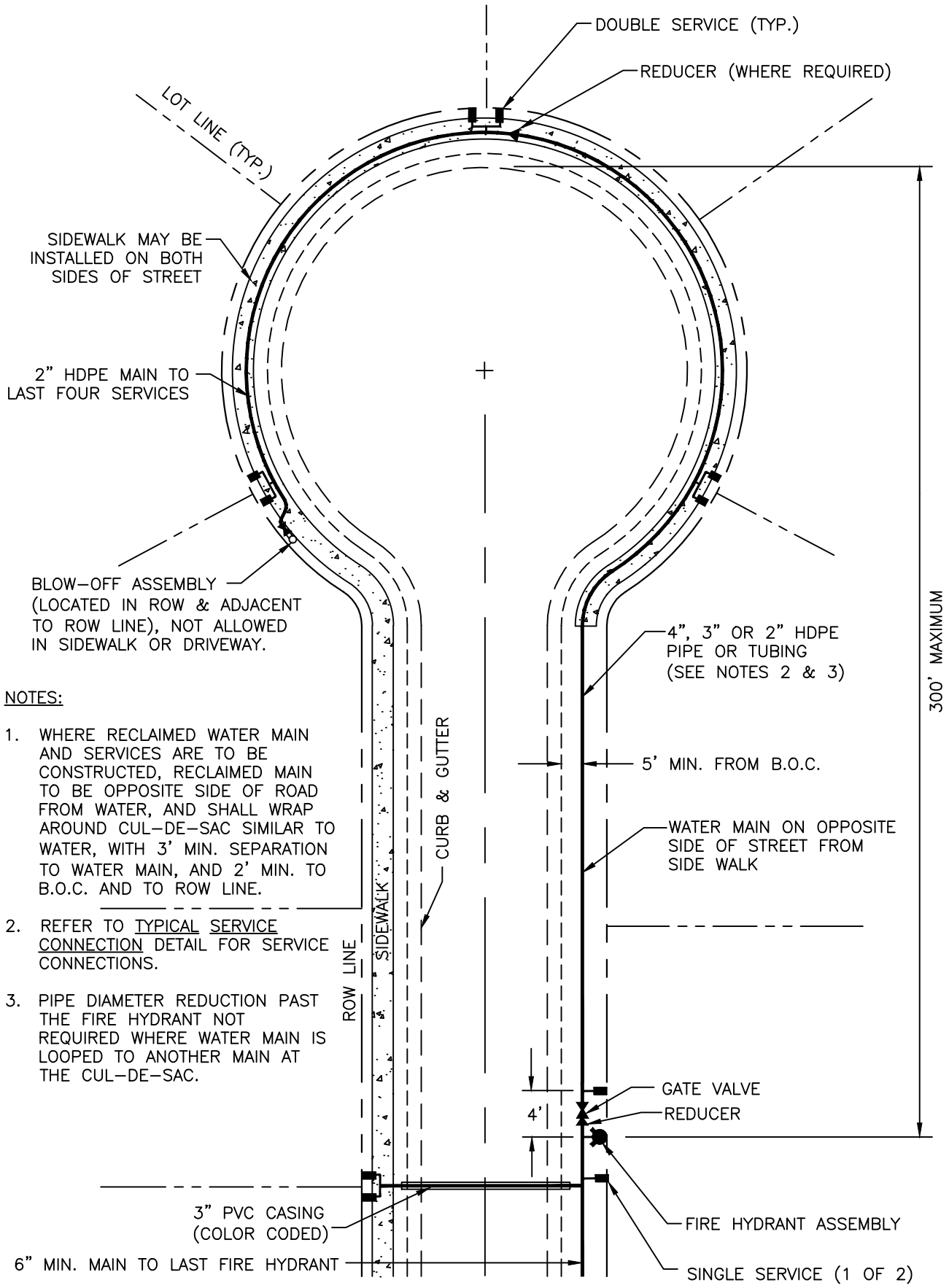

NOTES:

1. WHERE RECLAIMED WATER MAIN AND SERVICES ARE TO BE CONSTRUCTED, RECLAIMED MAIN TO BE OPPOSITE SIDE OF ROAD FROM WATER, AND SHALL WRAP AROUND CUL-DE-SAC SIMILAR TO WATER, WITH 3' MIN. SEPARATION TO WATER MAIN, AND 2' MIN. TO B.O.C. AND TO ROW LINE.
2. REFER TO TYPICAL SERVICE CONNECTION DETAIL FOR SERVICE CONNECTIONS.
3. PIPE DIAMETER REDUCTION PAST THE FIRE HYDRANT NOT REQUIRED WHERE WATER MAIN IS LOOPED TO ANOTHER MAIN AT THE CUL-DE-SAC.

MANATEE COUNTY
PUBLIC WORKS DEPARTMENT

REV.BY	DATE
CLB/BR	11/10

MAY 10, 2011
DATE OF APPROVAL

CUL-DE-SAC MAINS

UW-20

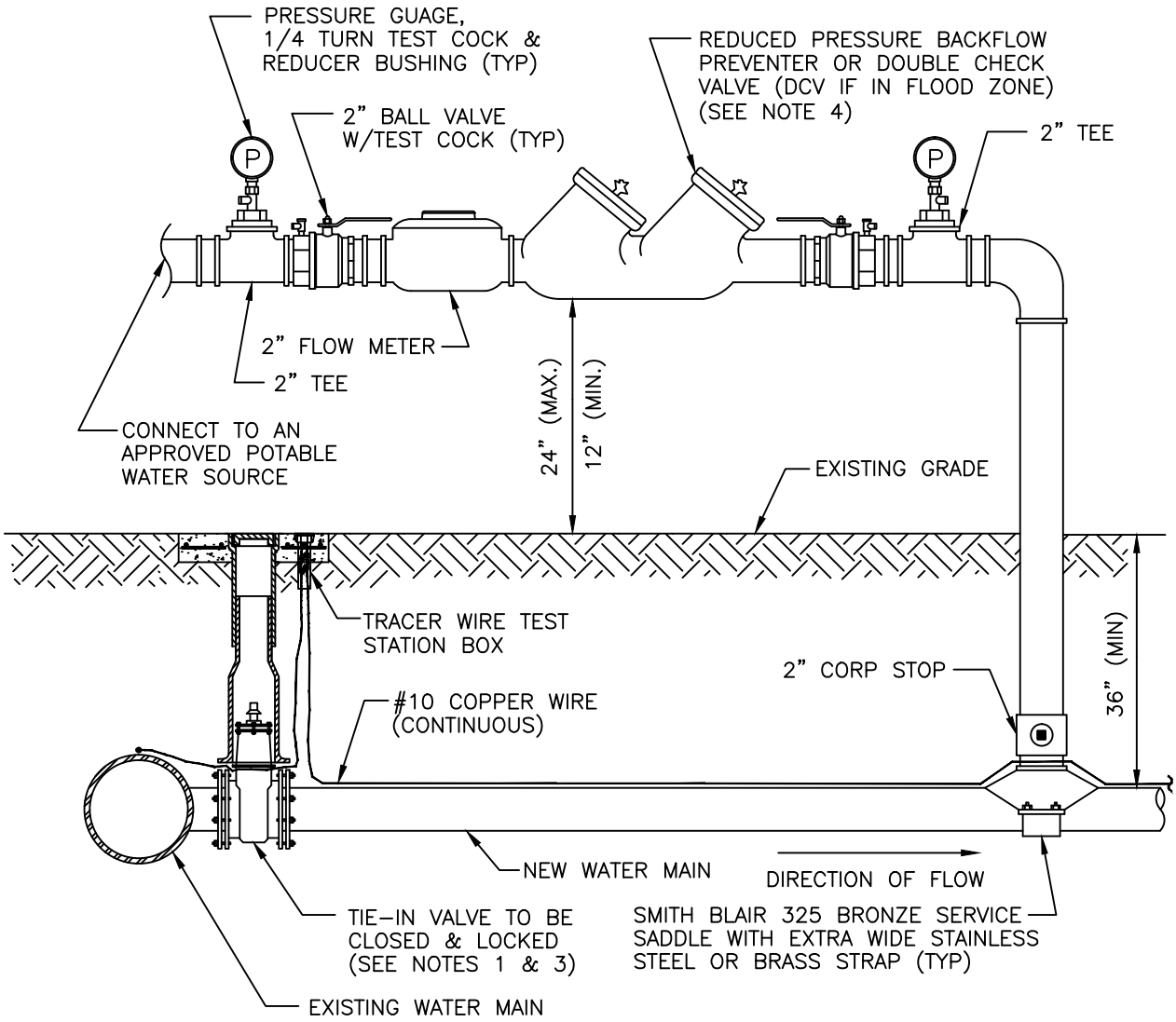

PROFILE

NOTES:

1. FOR TIE-IN VALVE, SEE DETAIL UW-4 FOR TAPPING SLEEVE VALVE, DETAIL UW-2 FOR GATE VALVE AND DETAIL UW-3 FOR BUTTERFLY VALVE.
2. CORPORATION STOP CONNECTIONS TO WATER MAINS SHALL BE AT A SUFFICIENT DISTANCE FROM NEW TAPPING SLEEVE & VALVE (TIE-IN VALVE). ALL CORPORATION STOP TAPS SHALL BE PLACED NO CLOSER THAN 30" OR A DISTANCE EQUAL TO (1) MAIN PIPE DIAMETER PLUS (2) TAP DIAMETERS (WHICHEVER IS LARGER) FROM THE NEW TIE-IN VALVE (TAPPING VALVE & SLEEVE). A CROSS MAY BE INSTALLED IF THE EXISTING WATER MAIN IS NOT LARGER THAN THE NEW WATER MAIN.
3. IF THE EXISTING WATER MAIN IS LOCATED UNDER PAVEMENT OR CLOSE TO THE ROADWAY, BOTH JUMPER CORPORATION STOPS MAY CONNECT TO THE NEW WATER MAIN LOCATED OUTSIDE OF THE PAVEMENT. AN ADDITIONAL GATE VALVE OR BUTTERFLY VALVE SHALL BE INSTALLED AND THE VALVE MAY BE LOCATED AT THE ROW LINE. PIPING AND APPURTENANCES BETWEEN THE EXISTING MAIN AND ISOLATION VALVE AND JUMPER SHALL BE DISINFECTED BY SPRAYING OR SWABBING.
4. BACKFLOW PREVENTER SHALL BE STRUCTURALLY SUPPORTED.
5. SEE DETAIL UW-22 FOR ADDITIONAL JUMPER CONNECTION NOTES.

MANATEE COUNTY PUBLIC WORKS DEPARTMENT			TEMPORARY JUMPER CONNECTION	UW-21
REV.BY	DATE			
WT/KE	01/11	MAY 10, 2011 DATE OF APPROVAL		PAGE 139

1. A temporary jumper connection is required at all connections between existing active potable water mains and proposed new water main improvements with the following exceptions:
   A. Projects that include a permanent backflow preventer at the right-of-way which is adjacent to the existing water main;
   B. Projects that include new water mains that are less than or equal to 18 linear feet in length; or
   C. Other proposed cases that are approved by Manatee County and the construction drawings specifically state that a temporary jumper connection is not required.
2. A temporary jumper shall be used and be connected to an approved potable water source (e.g., existing fire hydrant, existing main, existing service tap or tank truck, etc.) as shown in the standard temporary jumper detail UW-21. A temporary jumper shall be used for filling, flushing and for disinfection of any new main of any size. The jumper connection shall be maintained until after the filling, flushing, testing and disinfection of the new main has been successfully completed and clearance for use from the Florida Department of Environmental Protection (FDEP) or the Florida Department of Health (FDOH) has been obtained.
3. Locations and orientation of jumpers associated with connections to existing water mains that are located under the roadway pavement shall be approved on a case-by-case basis.
4. Pipe and fittings used for connecting the new pipe to the existing pipe shall be disinfected prior to installation in accordance with AWWA C651, latest edition. Unless approved otherwise, the tapping sleeve, and exterior of the existing main to be tapped, piping within the jumper, and new piping shown on standard temporary jumper detail UW-21 shall be disinfected by spraying or swabbing per Section 4.6 of AWWA C651.
5. A separate and successful hydrostatic test on the new system shall occur between the tie-in valve and the closest downstream gate valve or butterfly valve before performing a hydrostatic test on the remainder of the newly-constructed water main. The tie-in valve and the closest downstream gate valve or butterfly valve shall be closed during the hydrostatic test of the remainder of the newly constructed water main.
6. The jumper shall include a flow meter to ensure that the flow from the supply source is at a constant measured rate while chlorinating the new main. The chlorine concentration shall be measured at regular intervals to ensure that it is fed at a constant rate of not less than 25 milligrams per liter (mg/L) of free chlorine.
7. The jumper connection shall also be used to maintain a minimum pressure of 20 psi in the new mains continuously after disinfection and until FDEP/FDOH clearance letter is obtained.
8. All temporary backflow devices or "jumpers" utilized during pipeline construction must show certification that they have been tested annually according to the Florida Building Code, Plumbing Section, Chapter 3, Section 312.9.1, 312.9.2, Chapter 6, Section 608, and Resolution R87-125. Annual certification must be valid at time of installation and provided to the Manatee County Inspector upon request.
9. Except as required to flush lines greater than 6 inches in diameter, the lockable tie-in valve shall remain closed and shall be locked in the closed position by Manatee County. The tie-in valve shall remain closed and locked until the new system has been cleared for use by the FDEP/FDOH and all other pertinent agencies.
10. After receipt of clearance for use by FDEP/FDOH, Manatee County, and all other pertinent agencies, the Contractor shall remove the temporary jumper connection. The corporation stops are to be closed and plugged with 2-inch brass or PVC stops.
11. All installation and maintenance of the temporary jumper connection and associated backflow prevention device, flow meter, fittings, valves, etc., shall be the responsibility of the Contractor.
12. The tie-in valve shall remain closed if the potable water source is a tank truck.

TABLE OF CONTENTS

UTILITY STANDARDS–SANITARY SEWER

NOTE:

SEWAGE WORKS SHALL BE DESIGNED IN ACCORDANCE WITH F.D.E.P. REGULATIONS AND "RECOMMENDED STANDARDS FOR WASTEWATER FACILITIES" BY THE GREAT LAKES–UPPER MISSISSIPPI RIVER BOARD OF STATE AND PROVINCIAL PUBLIC HEALTH AND ENVIRONMENTAL MANAGERS – LATEST EDITION.

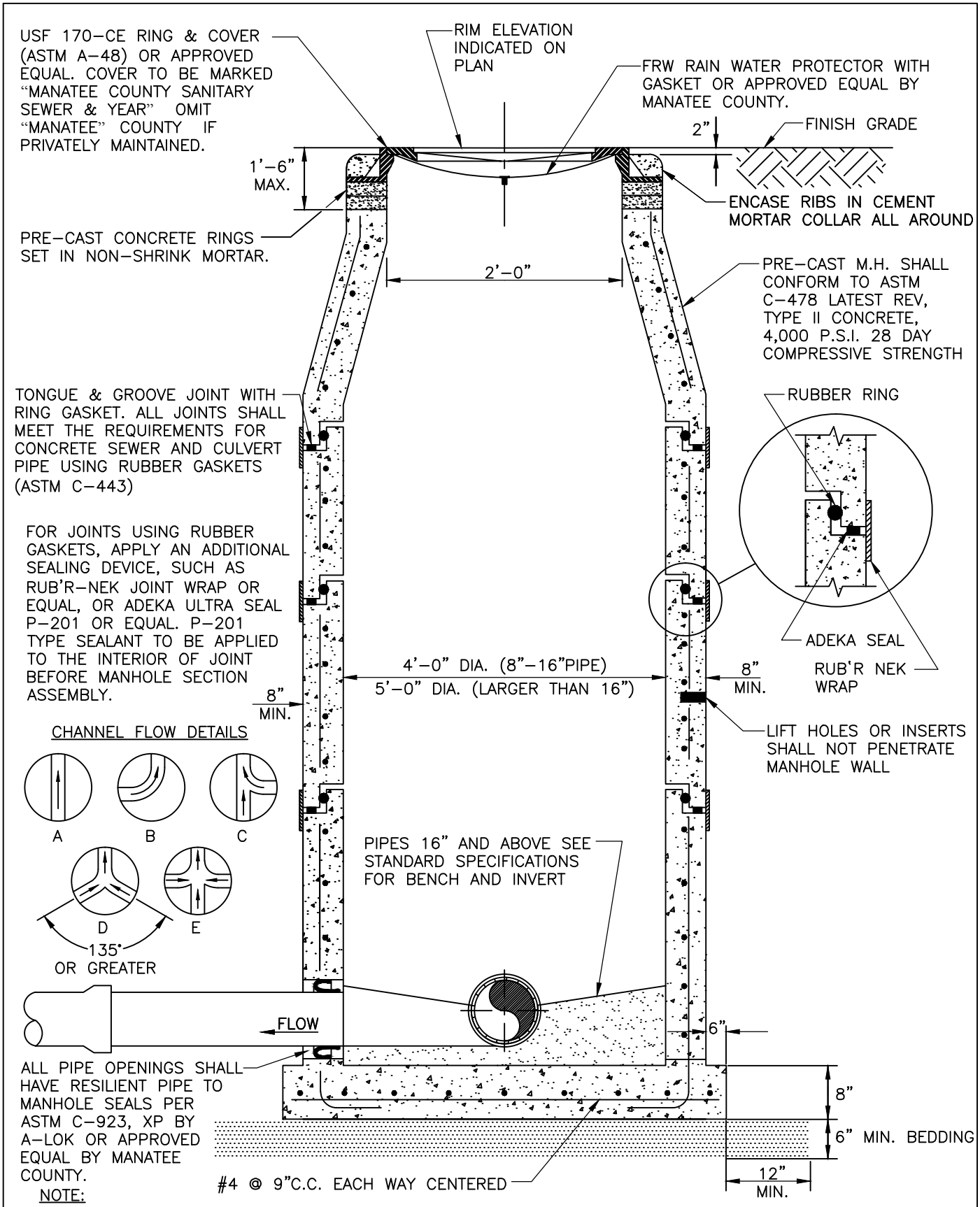

NOTE:

DROP MANHOLES, MANHOLES WITH OPPOSING FLOW (DETAILS D & E), MANHOLES IMMEDIATELY UPSTREAM OF A LIFT STATION WET WELL, MANHOLES WITH GRAVITY SEWERS GREATER THAN 12 INCHES IN DIAMETER, MANHOLES RECEIVING A FORCE MAIN AND THE FIRST TWO GRAVITY MANHOLES DOWNSTREAM OF MANHOLES RECEIVING A FORCE MAIN SHALL HAVE AN APPROVED LINER.

MANATEE COUNTY
PUBLIC WORKS DEPARTMENT

REV.BY	DATE
WRT/KE	04/11

MAY 10, 2011
DATE OF APPROVAL

STANDARD PRE-CAST SANITARY SEWER MANHOLE FOR UNDISTURBED FLOW

US-2

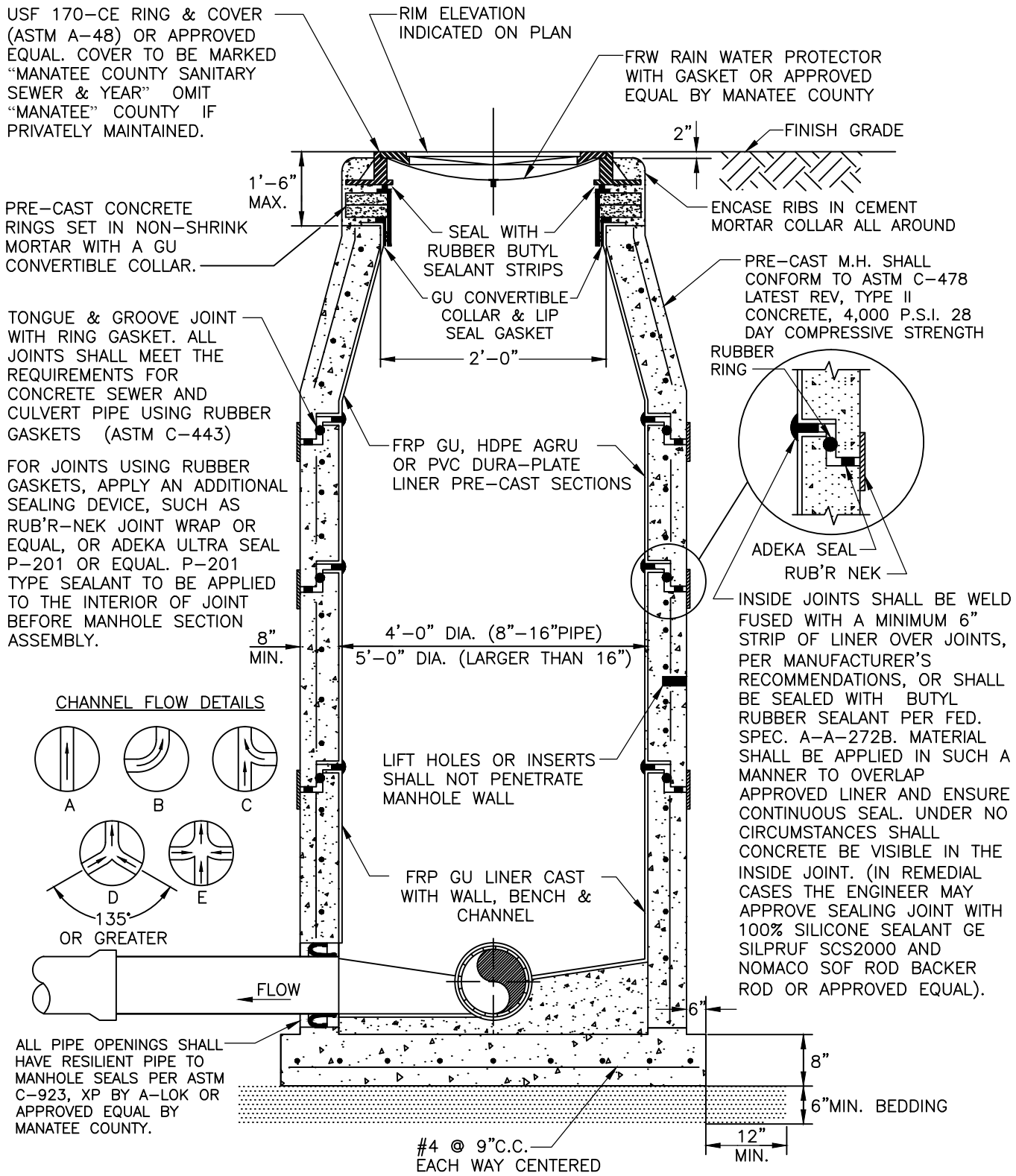

NOTE:
DROP MANHOLES, MANHOLES WITH OPPOSING FLOW (DETAILS D & E), MANHOLES IMMEDIATELY UPSTREAM OF A LIFT STATION WET WELL, MANHOLES WITH GRAVITY SEWERS GREATER THAN 12 INCHES IN DIAMETER, MANHOLES RECEIVING A FORCE MAIN AND THE FIRST TWO GRAVITY MANHOLES DOWNSTREAM OF MANHOLES RECEIVING A FORCE MAIN SHALL HAVE AN APPROVED LINER.

MANATEE COUNTY
PUBLIC WORKS DEPARTMENT

REV.BY	DATE
CLB/CB	11/10

MAY 10, 2011
DATE OF APPROVAL

STANDARD PRE-CAST SANITARY SEWER MANHOLE FOR TURBULENT FLOW

US-3

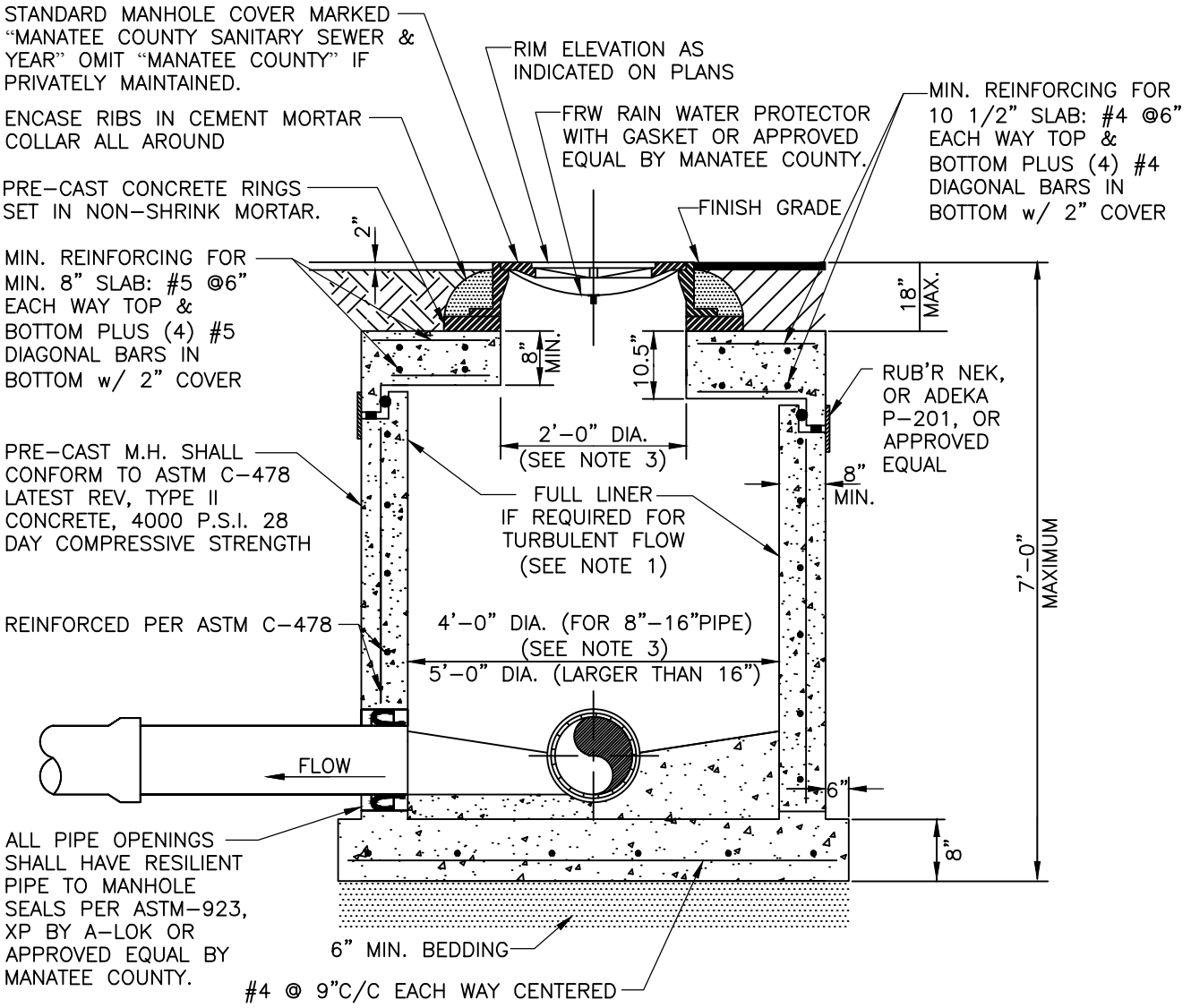

CHANNEL FLOW DETAILS

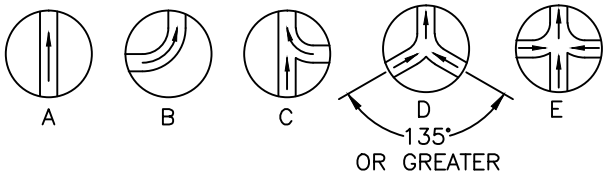

NOTES:

1. DROP MANHOLES, MANHOLES WITH OPPOSING FLOW (DETAILS D & E), MANHOLES IMMEDIATELY UPSTREAM OF A LIFT STATION WET WELL, MANHOLES WITH GRAVITY SEWERS GREATER THAN 12 INCHES IN DIAMETER, MANHOLES RECEIVING A FORCE MAIN AND THE FIRST TWO GRAVITY MANHOLES DOWNSTREAM OF MANHOLES RECEIVING A FORCE MAIN SHALL HAVE AN APPROVED LINER.

2. LIFT HOLES OR INSERTS SHALL NOT PENETRATE THE WALLS OF THE MANHOLES.

3. A MINIMUM COVER OF 3' OVER THE GRAVITY SEWER SHALL BE PROVIDED. FOR MANHOLES WITH LESS THAN 4" OF COVER OVER THE GRAVITY SEWER, THE MANHOLE INSIDE DIAMETER SHALL BE 5'-0" AND THE FRAME AND COVER SHALL BE 32" "PAMREX" WITH 32" OPENING.

MANATEE COUNTY
PUBLIC WORKS DEPARTMENT

REV.BY	DATE
CLB/CB	9/10

MAY 10, 2011
DATE OF APPROVAL

STANDARD PRE-CAST SHALLOW MANHOLE

US-4

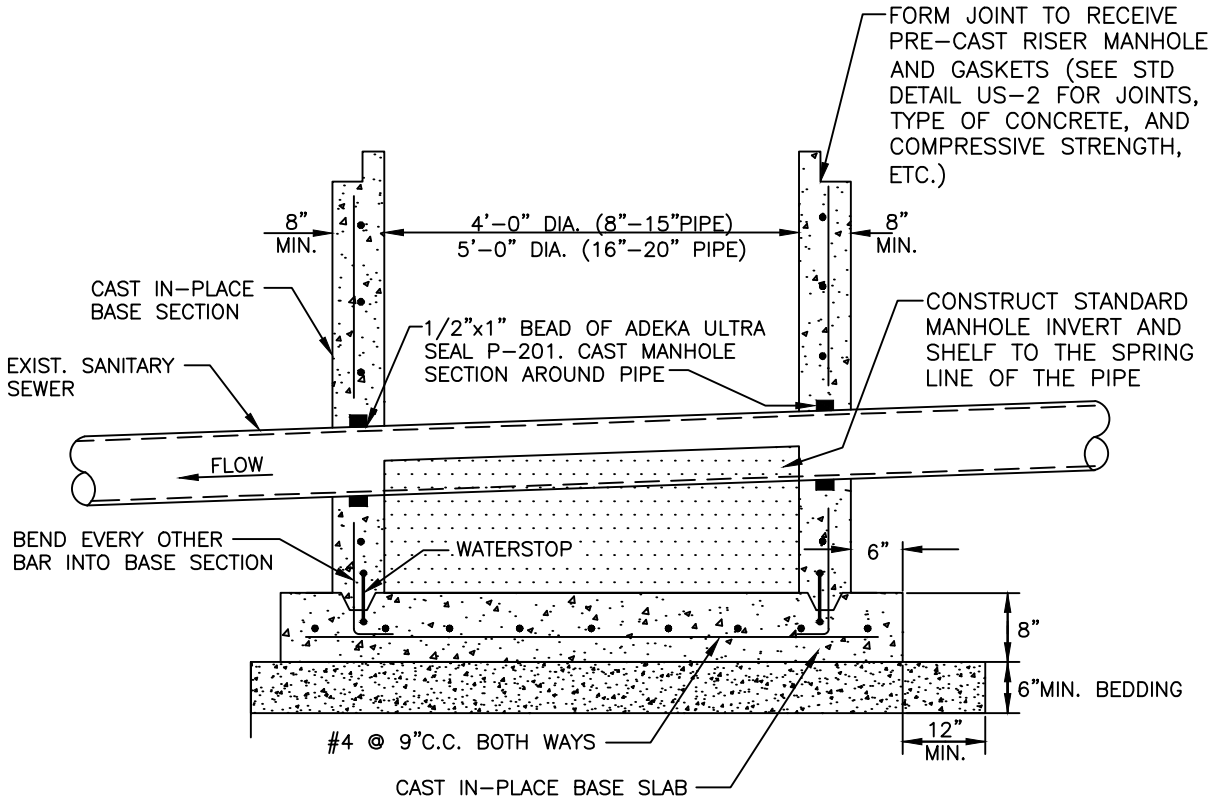

NOTES:

1. PRIOR TO ANY EXCAVATION OVER THE PIPE, A TV RECORDING OF THE EXISTING SEWER MAIN SHALL OCCUR BETWEEN THE UPSTREAM AND DOWNSTREAM MANHOLES WHILE THE COUNTY INSPECTOR IS PRESENT.

2. THE CONTRACTOR SHALL CAREFULLY EXCAVATE AROUND AND PROPERLY SUPPORT THE EXISTING PIPE.

3. PREFERRED CONSTRUCTION IS BY "CUTTING-IN" A STANDARD SANITARY SEWER MANHOLE WITH A TEMPORARY FLOW BY-PASS SYSTEM.

4. SEWER LINES GREATER THAN 20" REQUIRE SPECIAL DESIGN AND APPROVAL BY MANATEE COUNTY UTILITIES ENGINEERING.

5. ALLOW SUFFICIENT CURING TIME, 24-36 HOURS, FOR THE ADEKA ULTRA-SEAL P-201, BEFORE POURING CONCRETE.

6. FOLLOWING SATISFACTORY CURING OF THE INVERT CHANNEL AND SHELF, THE CONTRACTOR SHALL CUT AND REMOVE THE TOP HALF OF THE EXISTING PIPE WITHIN THE MANHOLE, TAKING CARE NOT TO ALLOW ANY PIECES TO BE WASHED DOWN STREAM IN THE PIPE. CUTTING OF THE PIPE SHALL BE IN A WORKMAN LIKE MANNER, PROVIDING A SMOOTH AND EVEN FINISHED PRODUCT.

7. A TV RECORDING OF THE SEWER MAIN SHALL ALSO OCCUR AFTER CONSTRUCTION WHILE THE COUNTY INSPECTOR IS PRESENT. PIPE DEFLECTION SHALL NOT DEVIATE BY MORE THAN 1 INCH FROM THE DESIGN LINE.

8. THERE SHALL BE NO VISIBLE LEAKS IN THE MANHOLE.

MANATEE COUNTY PUBLIC WORKS DEPARTMENT			SANITARY SEWER MANHOLE CONSTRUCTED OVER EXISTING SEWER LINE	US-5
REV.BY	DATE			
CLB/KE	11/10	MAY 10, 2011 DATE OF APPROVAL		PAGE 145

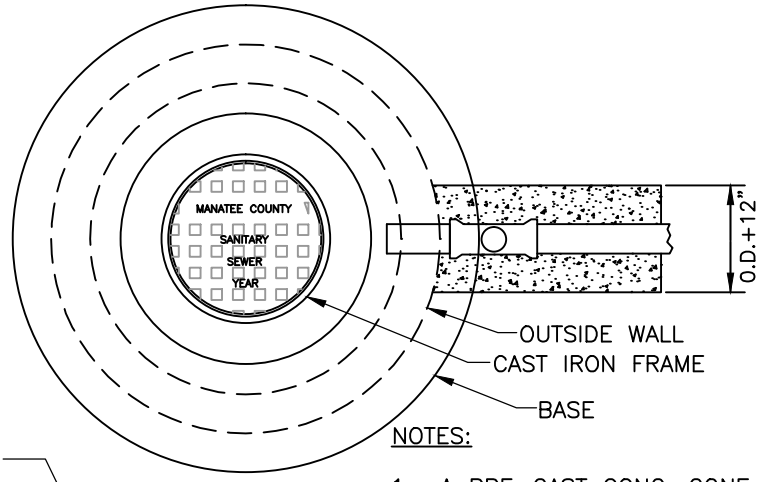

NOTES:

1. A PRE-CAST CONC. CONE MAY BE USED IN LIEU OF THE FLAT TOP SHOWN IN THIS DETAIL.
2. A PRE-CAST CONC. OUTSIDE DROP MAY BE USED IN LIEU OF THE CAST IN PLACE ENCASEMENT SHOWN BELOW.

PLAN

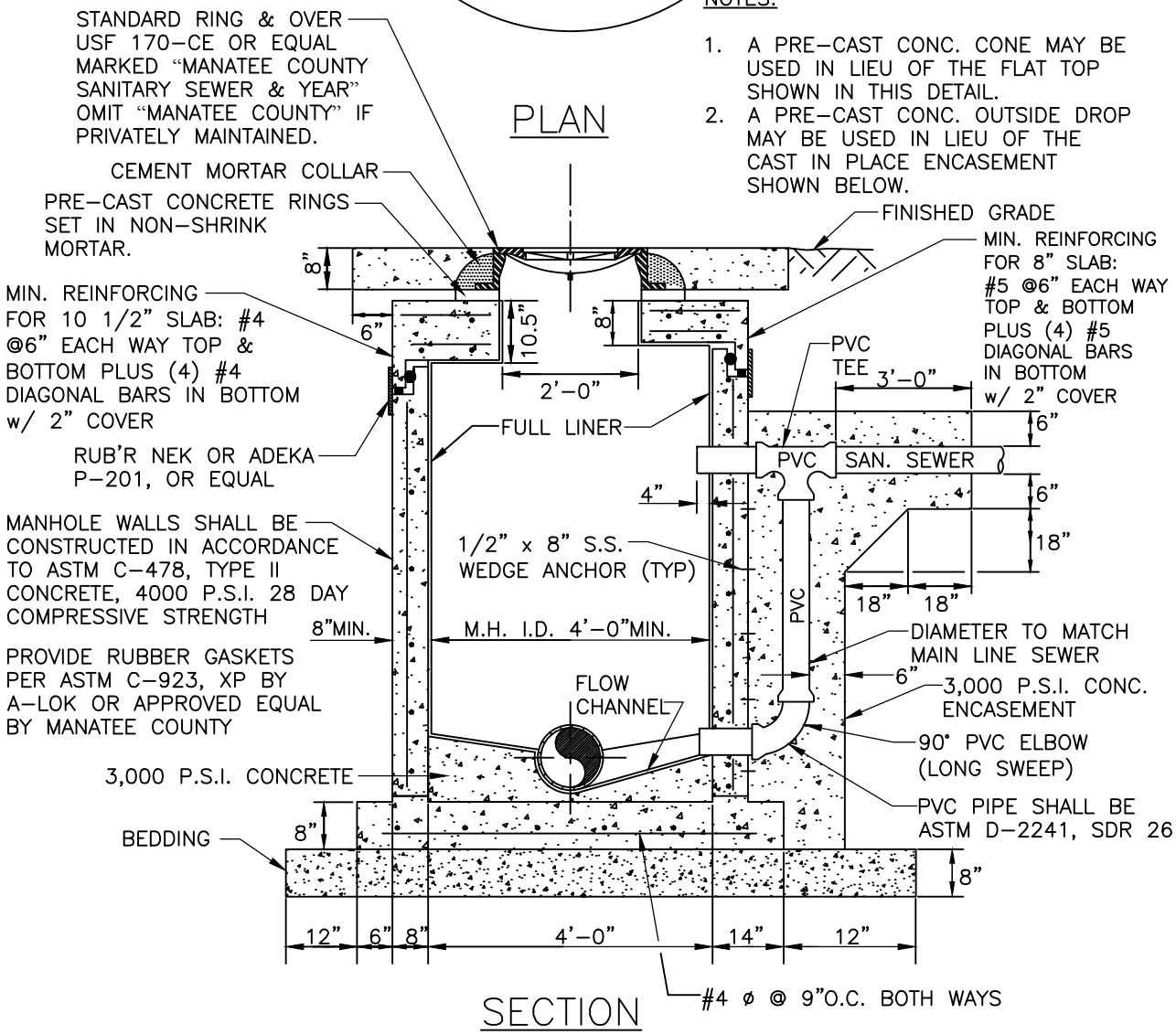

SECTION

NOTES:

1. THIS IS AN INTERCEPT MANHOLE AND MUST BE LINED WITH AN APPROVED LINER.
2. DROP MANHOLES ARE REQUIRED WHEN THE VERTICAL DISTANCE BETWEEN THE LOWEST EXISTING MANHOLE INVERT AND THE HIGHEST PIPE INVERT IS 2'-0" OR GREATER.

MANATEE COUNTY PUBLIC WORKS DEPARTMENT			GRAVITY SEWER STANDARD DROP CONNECTION	US-6
REV.BY	DATE			
CLB/KE	11/10	MAY 10, 2011 DATE OF APPROVAL		PAGE 145

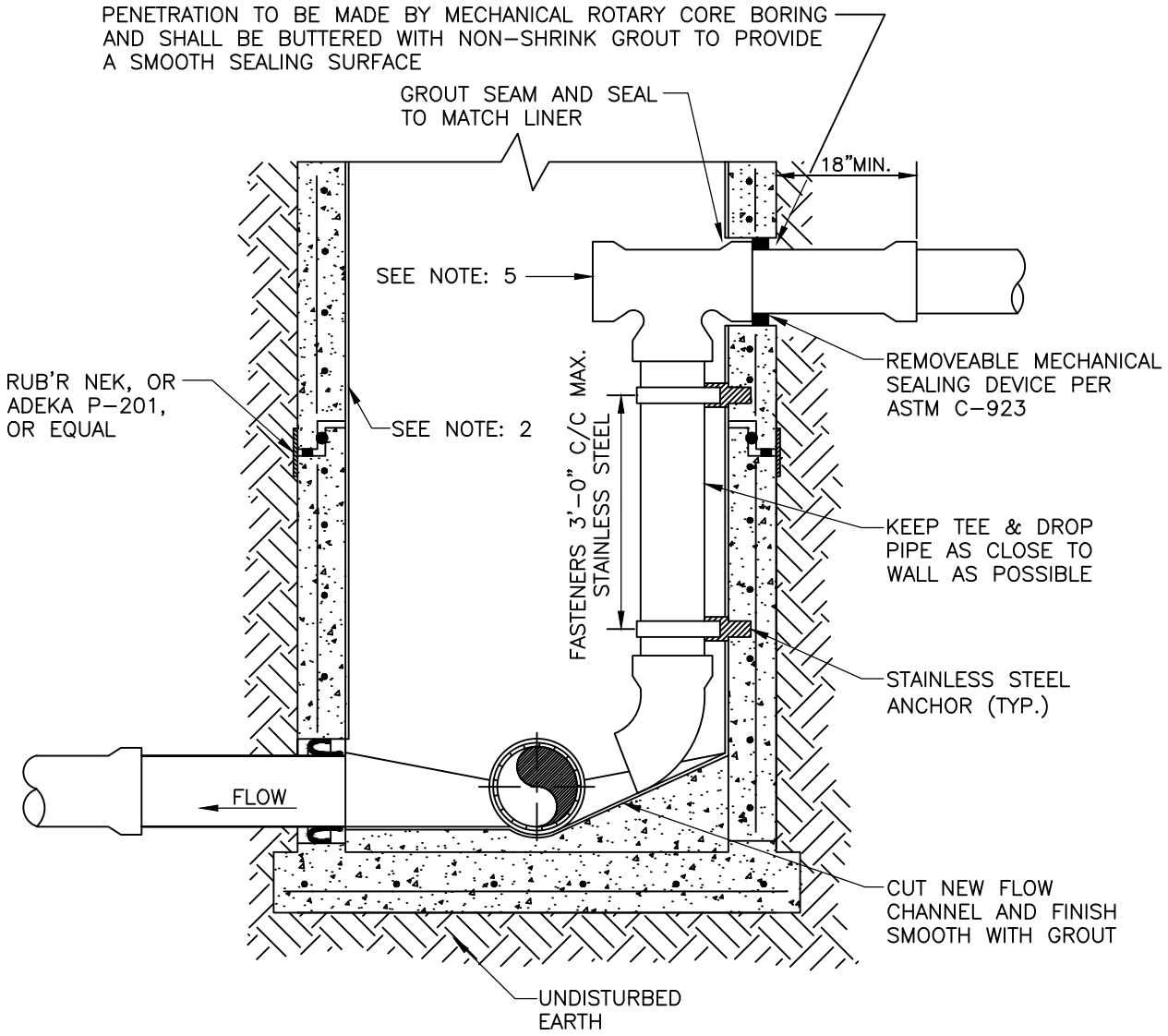

NOTES:

1. PIPE AND FITTINGS SHALL BE PVC ASTM D-3034 SDR 26.
2. THIS IS AN INTERCEPT MANHOLE AND MUST BE LINED WITH APPROVED LINER. APPROVED SPRAY-ON LINERS MAY BE USED FOR EXISTING MANHOLES. REFER TO SECTION 1 OF THE MANATEE COUNTY UTILITY STNDARDS.
3. INSIDE DROP MANHOLES ARE REQUIRED WHEN THE VERTICAL DISTANCE BETWEEN THE LOWEST EXISTING MANHOLE INVERT AND THE HIGHEST PIPE INVERT IS 2'-0" OR GREATER.
4. ALL HARDWARE AND FASTENERS SHALL BE STAINLESS STEEL.
5. PVC TEE MAY BE SUBSTITUTED WITH A PLASTIC COMPOSITE/FIBERGLASS DROP BOWL AS MANUFACTURED BY RELINER/DURAN.

MANATEE COUNTY PUBLIC WORKS DEPARTMENT			GRAVITY INSIDE-DROP FOR RETROFIT OF EXISTING MANHOLE	US-7
REV.BY	DATE			
CLB/KE	11/10	MAY 10, 2011		
		DATE OF APPROVAL		

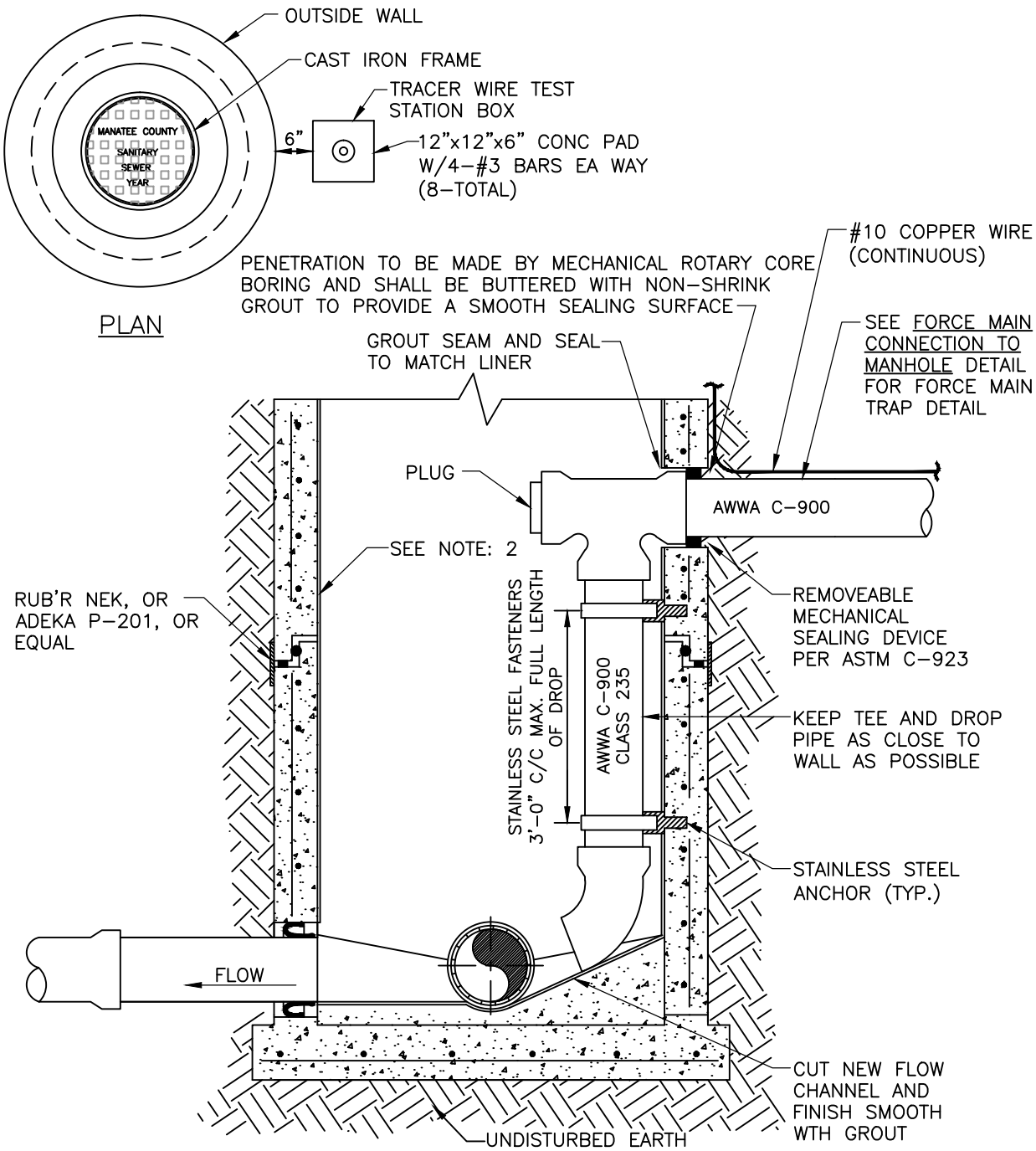

NOTES:

1. ALL FITTINGS SHALL BE AWWA C-907. DROP PIPE SHALL BE AWWA C-900 (CLASS 235, DR 18).
2. THIS IS AN INTERCEPT MANHOLE AND MUST BE LINED WITH AN APPROVED LINER. APPROVED SPRAY-ON LINERS MAY BE USED FOR EXISTING MANHOLES. REFER TO SECTION 1 OF THE MANATEE COUNTY UTILITY STANDARDS.
3. INSIDE DROP MANHOLES ARE REQUIRED WHEN THE VERTICAL DISTANCE BETWEEN THE LOWEST EXISTING MANHOLE INVERT AND THE HIGHEST PIPE INVERT IS 2'-0" OR GREATER.
4. ALL HARDWARE AND FASTENERS SHALL BE STAINLESS STEEL.
5. TRAP IS REQUIRED IN FORCE MAIN BEFORE ENTERING MANHOLE.

MANATEE COUNTY PUBLIC WORKS DEPARTMENT			FORCE MAIN RETROFIT FOR INSIDE-DROP CONNECTION	US-8
REV.BY	DATE			
CLB/KE	11/10	MAY 10, 2011 DATE OF APPROVAL		PAGE 148

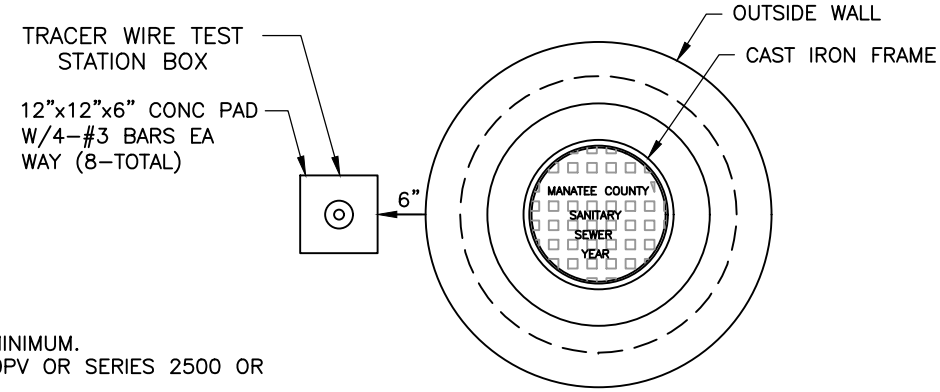

PLAN

NOTES:

1. PIPE FITTINGS TO BE AWWA C-907, CLASS 150 MINIMUM.
2. PVC RESTRAINERS TO BE EBAA IRON SERIES 2000PV OR SERIES 2500 OR APPROVED EQUAL.
3. WHEN FORCE MAIN ENTERS M.H. ABOVE BOTTOM, REFER TO FORCE MAIN RETROFIT FOR INSIDE DROP CONNECTION DETAIL.
4. BUILD FLOW CHANNEL PER DETAIL SEWER MANHOLE FOR TURBULENT FLOW, AND FINISH SMOOTH WITH GROUT.
5. THIS IS AN INTERCEPT MANHOLE AND MUST BE LINED WITH AN APPROVED LINER.

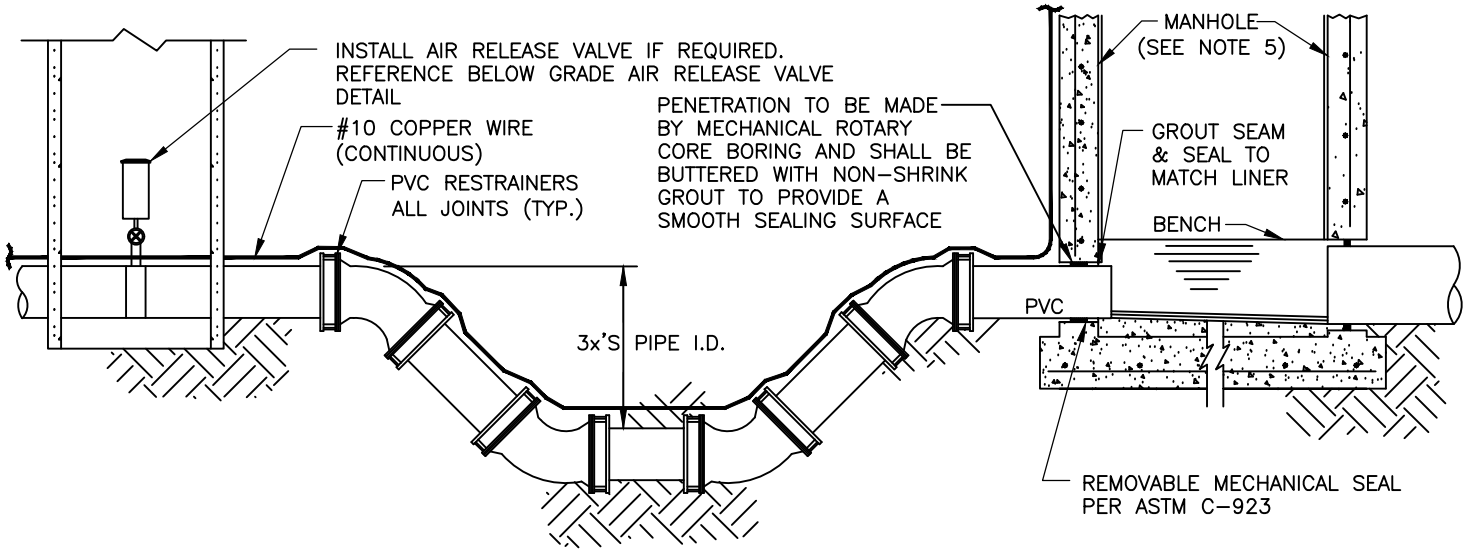

MANATEE COUNTY
PUBLIC WORKS DEPARTMENT

REV.BY	DATE
CLB/KE	11/10

MAY 10, 2011
DATE OF APPROVAL

FORCE MAIN CONNECTION TO MANHOLE

US-9

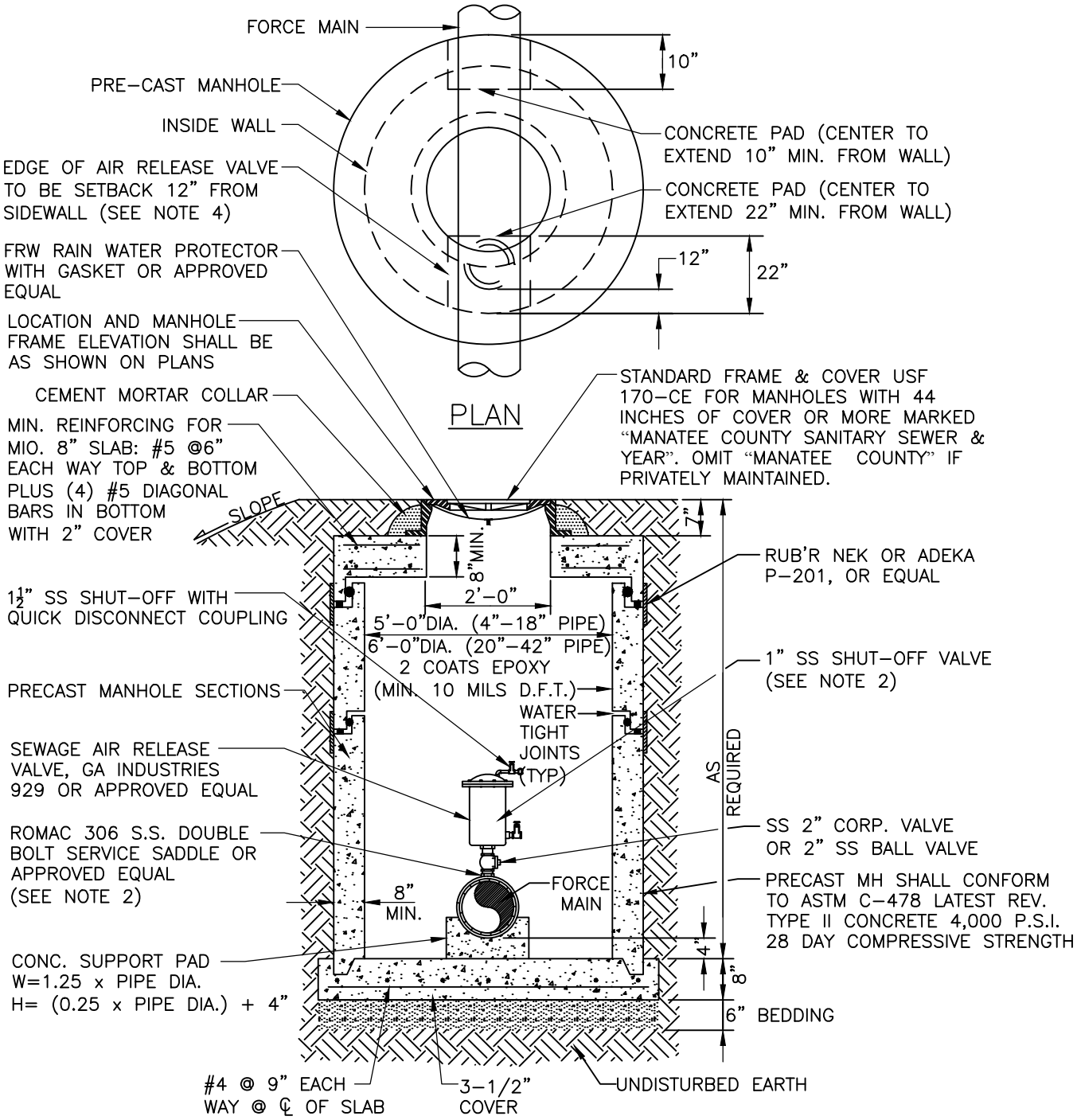

NOTES:

1. AIR RELEASE VALVES WHERE REQUIRED ON 4" AND LARGER FORCE MAINS.
2. ARV TO BE SIZED ACCORDING TO MANUFACTURER'S RECOMMENDATION FOR FORCE MAIN SIZE.
3. SERVICE SADDLE, NIPPLES AND CORPORATION BALL VALVE SHALL BE STAINLESS STEEL.
4. FOR MANHOLES WITH LESS THAN 44 INCHES OF COVER FROM TOP-OF-PIPE TO TOP-OF-FRAME, FRAME & COVER TO BE 32-INCH PAMREX WITH 32 INCH OPENING. OFFSET ARV 7.5 INCHES FROM CENTER OF OPENING. MINIMUM ALLOWABLE COVER IS 36 INCHES.
5. ALL PIPE PENETRATING MANHOLE SHALL HAVE RESILIENT PIPE TO MANHOLE SEALS PER ASTM-923.
6. FINAL GRADE TO BE SLOPED AWAY FROM MANHOLE.

MANATEE COUNTY
PUBLIC WORKS DEPARTMENT

REV.BY	DATE
CLB/KE	11/10

MAY 10, 2011
DATE OF APPROVAL

BELOW GRADE AIR RELEASE VALVE FOR FORCE MAINS

US-10

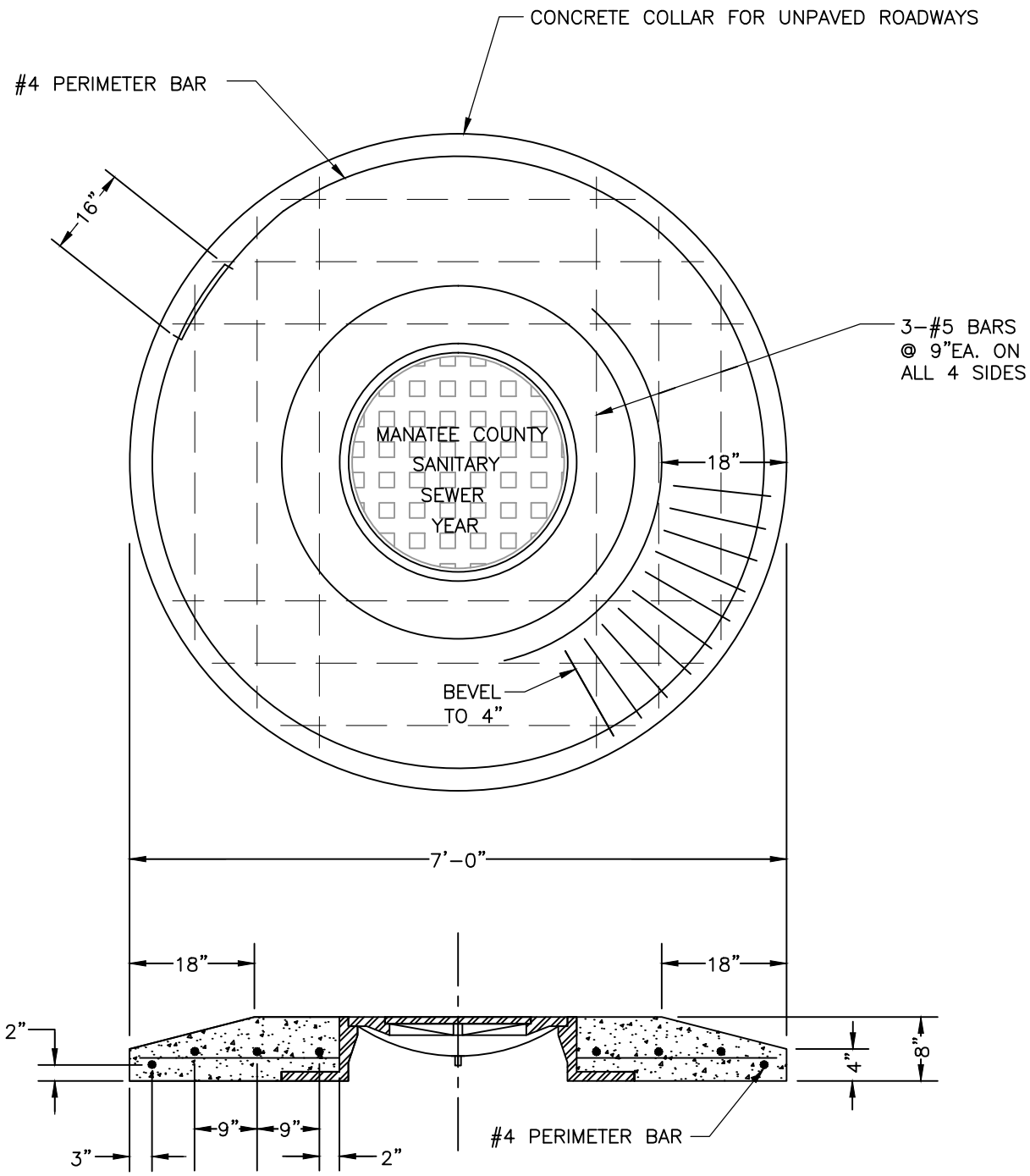

NOTES:

1. OMIT "MANATEE COUNTY" IF PRIVATELY MAINTAINED.
2. PORTLAND CEMENT SHALL CONFORM TO ASTM C150, TYPE 1, AND CONCRETE SHALL HAVE A MINIMUM COMPRESSIVE STRENGTH OF 4,000 P.S.I.

MANATEE COUNTY PUBLIC WORKS DEPARTMENT			MANHOLE COVER & CONCRETE COLLAR FOR UNPAVED ROADWAYS	US-11
REV.BY	DATE			
CLB/BR	11/10	MAY 10, 2011 DATE OF APPROVAL		PAGE 151

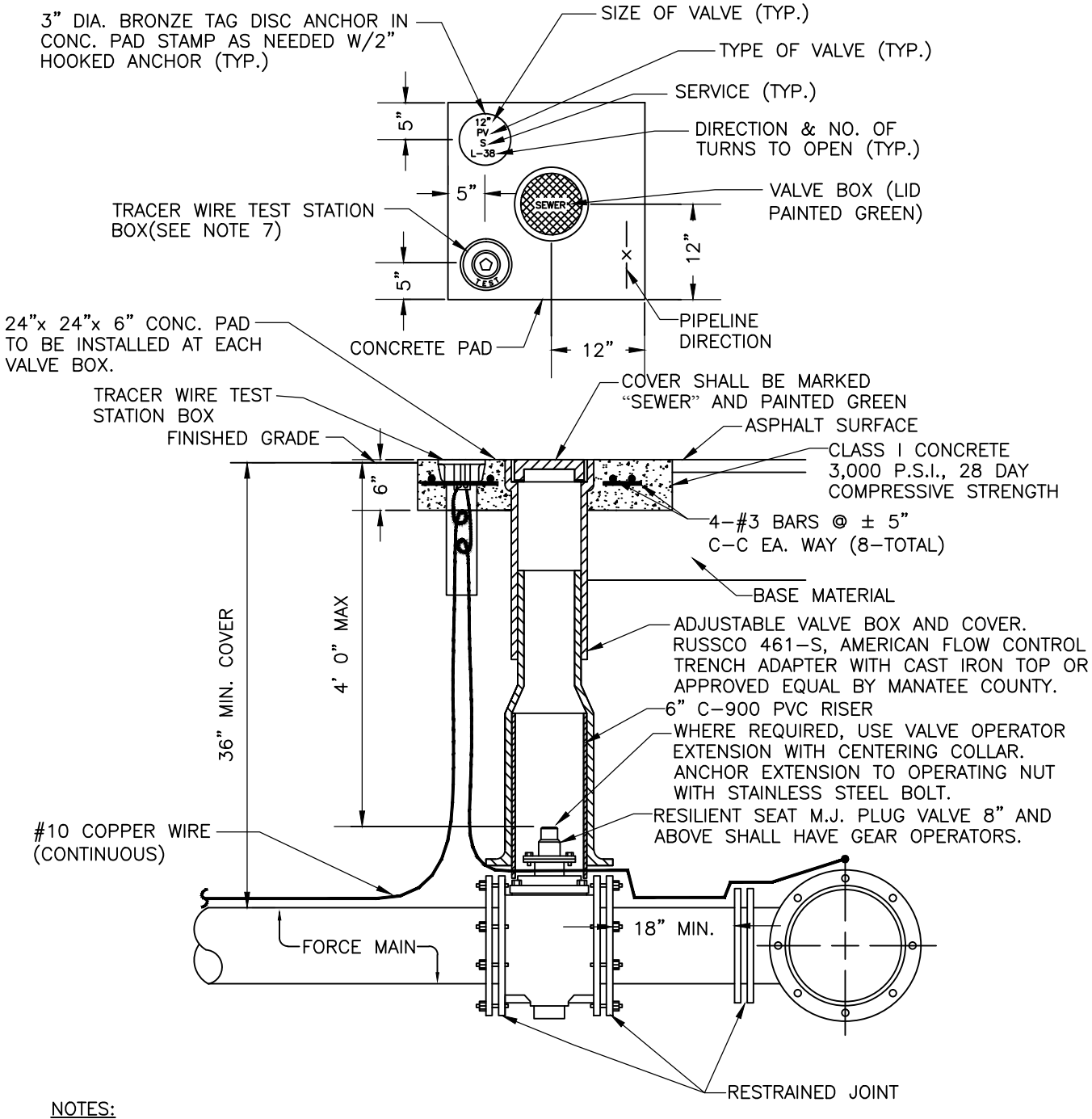

NOTES:

1. "SV" TO BE IMPRESSED INTO THE NEWLY-POURED CONCRETE CURB, ALONG WITH DISTANCE IN FEET TO THE VALVE. IF NO CURB, INSTALL A GREEN DISC WITH "SV" AND A 1/8"x1" GALVANIZED STEEL SCREW IN THE EDGE OF PAVEMENT WITH THE DISTANCE (FT.) FROM THE DISC TO THE VALVE.
2. ALL EXISTING AND PROPOSED VALVE BOXES SHALL BE ADJUSTED TO FINISHED GRADES AS ESTABLISHED IN THE FIELD.
3. SEWER VALVES SHALL NOT BE PLACED IN HANDICAPPED RAMPS.
4. PRECAST CONCRETE PADS SHALL NOT BE USED.
5. ALL EXPOSED EDGES OF CONCRETE SHALL BE CHAMFERED 1/2".
6. PLUG VALVES SHALL NOT BE USED AS A TAPPING VALVE. WHERE AN EXISTING FORCE MAIN IS TO BE TAPPED, USE A TAPPING GATE VALVE PER THE TAPPING SLEEVE AND VALVE DETAIL.
7. TEST BOX TO BE BINGHAM & TAYLOR P200NFG OR EQUAL FOR NORMAL YARD SERVICE. WHERE VALVE WILL BE IN STREET OR UNDER VEHICLE TRAFFIC, USE P525RD CENTERED IN SEPARATE CONCRETE PAD SIMILAR TO STANDARD VALVE BOX PAD.

MANATEE COUNTY
PUBLIC WORKS DEPARTMENT

REV.BY	DATE
CLB/DOM	11/10

MAY 10, 2011
DATE OF APPROVAL

PLUG VALVE, BOX, COVER AND TAG

US-12

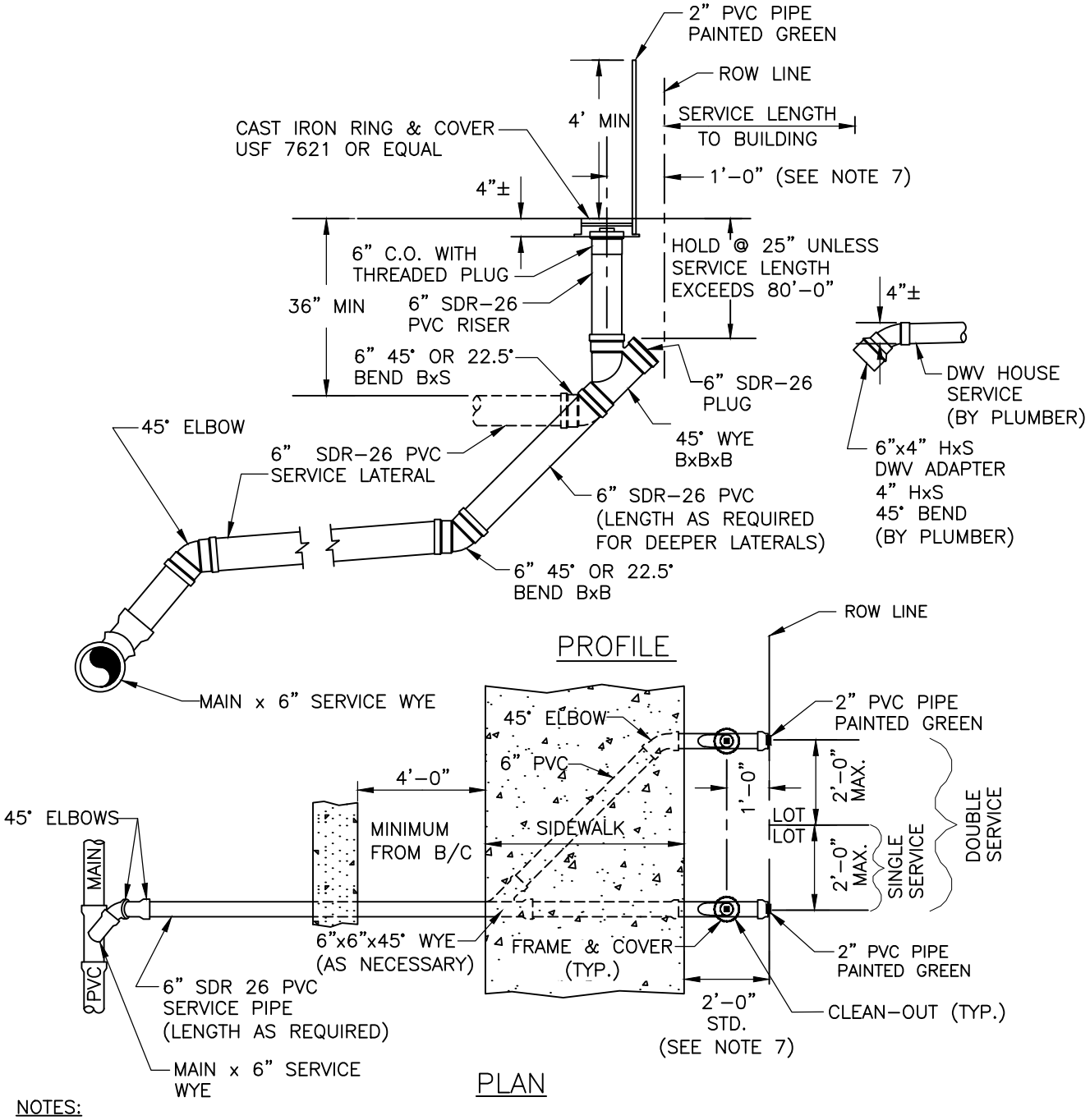

NOTES:

1. RUBBER DONUTS ARE NOT TO BE USED.
2. "SCO" TO BE IMPRESSED INTO THE NEWLY-POURED CONCRETE CURB, ALONG WITH DISTANCE IN FEET TO THE CLEAN-OUT. IF NO CURB INSTALL A GREEN DISC WITH "SCO" AND ⅛" X 1" GALVANIZED STEEL SCREW IN THE EDGE OF PAVEMENT WITH THE FOOTAGE FROM THE DISC TO THE CLEAN-OUT.
3. SANITARY SEWER CLEAN-OUTS SHALL NOT BE LOCATED IN DRAINAGE SWALES, EASEMENTS, SIDEWALKS OR DRIVEWAYS.
4. NO SERVICE CONNECTIONS TO BE MADE TO THE CLEAN-OUT RISER. ALL DOMESTIC CONNECTIONS SHALL BE MADE TO THE STUB-OUT PROVIDED.
5. SEWER SERVICE SHALL BE 5' MIN. FROM WATER SERVICE OR FIRE HYDRANT.
6. CLEAN-OUT ADAPTER TO BE SOLVENT-WELDED TO RISER TOP. CLEAN-OUT THREADS SHALL BE WRAPPED WITH TEFLON PLUMBERS TAPE TO SEAL PLUG WATERTIGHT.
7. WHEN THE DISTANCE BETWEEN THE EDGE OF THE SIDEWALK & THE ROW LINE IS ONE FOOT (CUL-DE-SAC W/MEDIAN) THE DISTANCE BETWEEN THE CENTER OF THE CO RISER & THE ROW LINE SHALL BE 6".

MANATEE COUNTY
PUBLIC WORKS DEPARTMENT

REV.BY	DATE
CLB/DOM	11/10

MAY 10, 2011
DATE OF APPROVAL

SINGLE AND DOUBLE SERVICE CONNECTION

US-13

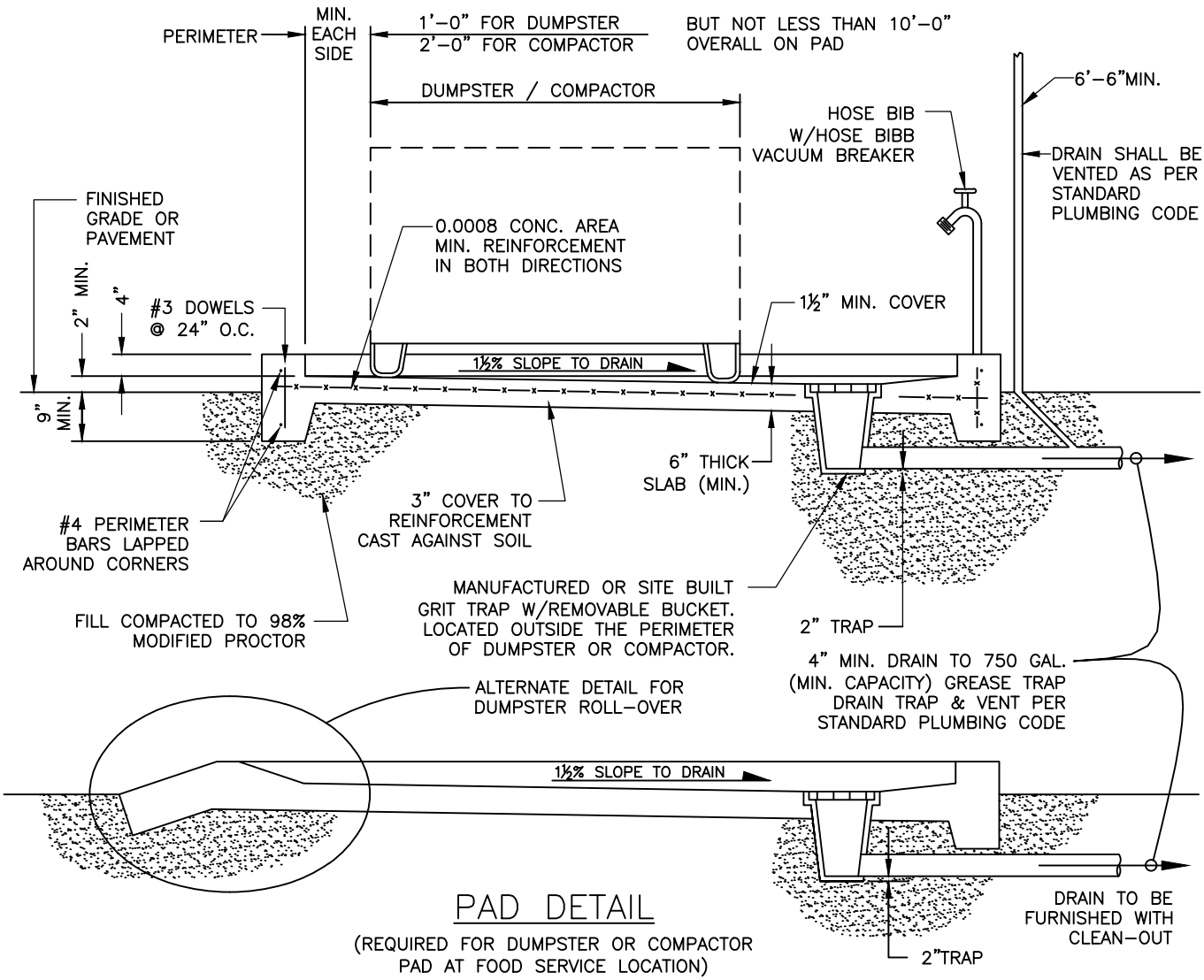

PAD DETAIL

(REQUIRED FOR DUMPSTER OR COMPACTOR PAD AT FOOD SERVICE LOCATION)

NOTE : MINIMUM GATE OPENING THRU FENCE OR SCREEN IS 9'-5"

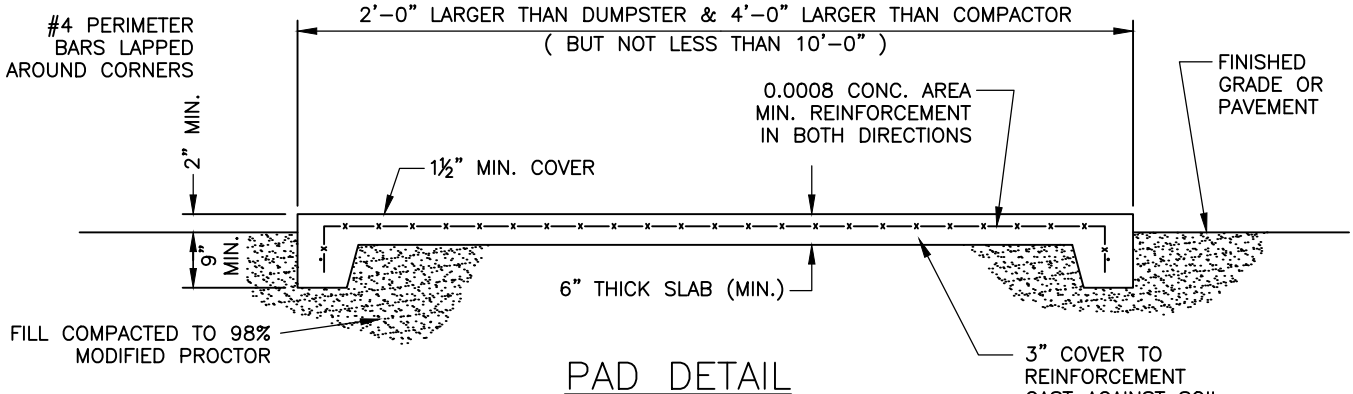

PAD DETAIL

MINIMUM REQUIRED FOR DUMPSTER OR COMPACTOR PAD AT NON-FOOD SERVICE LOCATION

NOTES:

1. DUMPSTER PAD SHALL BE CLASS I CONCRETE W/ MIN. COMP. STRENGTH f'c= 3000 P.S.I. & MIN. REINFORCEMENT STRENGTH fy= 60,000 P.S.I.
2. DUMPSTER PAD SHALL BE FENCED IN ACCORDANCE WITH THE MANATEE COUNTY LAND DEVELOPEMENT CODE.

MANATEE COUNTY
PUBLIC WORKS DEPARTMENT

REV.BY	DATE
CLB/BR	11/10

MAY 10, 2011
DATE OF APPROVAL

COMPACTOR AND DUMPSTER PADS

US-14

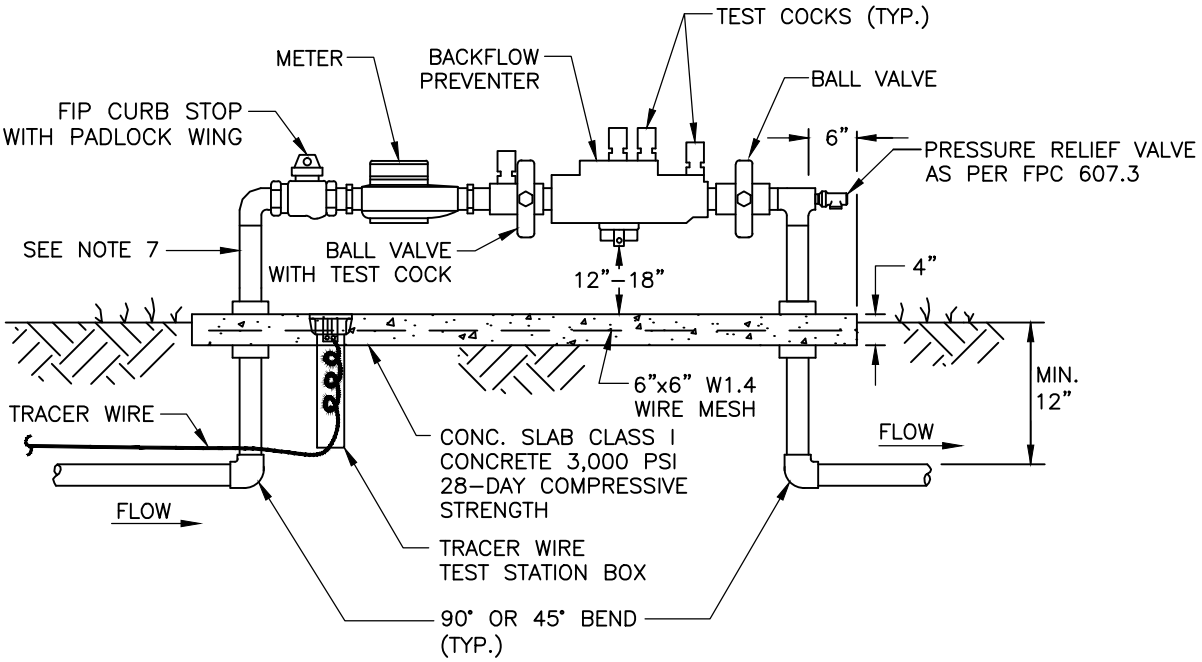

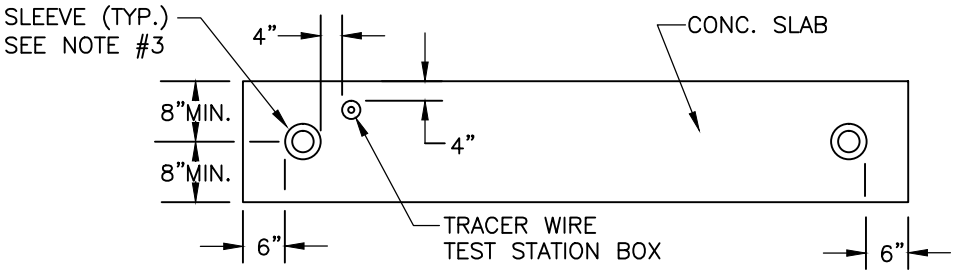

NOTES:

1. BACKFLOW DEVICE MUST BE INSTALLED DOWNSTREAM OF METER, AS CLOSE TO METER AS POSSIBLE.
2. COPPER PIPE TYPE "L" OR BRASS PIPE MINIMUM SCHEDULE 40 SHALL BE USED TO A MINIMUM DEPTH OF 12" BELOW GRADE.
3. PIPES PASSING THROUGH OR ENCASED IN CONCRETE MUST BE PROPERLY PROTECTED AND SLEEVED.
4. THE SYSTEM MUST MEET ALL REQUIRMENTS OF THE FLORIDA PLUMBING CODE (LATEST EDITION) AND THE MANATEE COUNTY BACKFLOW PREVENTION ORDINANCE (LATEST EDITION).
5. ALL EXPOSED EDGES OF CONCRETE SHALL BE CHAMFERED 1/2".
6. BACKFLOW PREVENTER SHALL BE TESTED AT THE TIME OF INSTALLATION.
7. PRESSURE REDUCING VALVE REQUIRED UPSTREAM OF BACKFLOW IF SYSTEM PRESSURE EXCEEDS 80 PSI.
8. 3' MINIMUM CLEARANCE FROM LANDSCAPING PLANTS TO EDGE OF CONCRETE SLAB AND CLEAR OPENING FOR ACCESS FROM STREET.
9. THE WATER METER AND BACKFLOW PREVENTER SHALL BE LOCATED WITHIN THE LIFT STATION FENCING FOR PUBLICLY OWNED AND MAINTAINED LIFT STATIONS. THE ASSEMBLY FOR PRIVATE LIFT STATIONS SHALL BE LOCATED ADJACENT TO THE ROW LINE OR WITHIN AN EASEMENT OUTSIDE OF THE FENCING.
10. SATTELITE PUMP STATIONS SHALL HAVE A 5/8–INCH WATER METER, WITH A 3/4–INCH REDUCED PRESSURE BACKFLOW PREVENTER. STATIONS WITH WETWELL DIAMETERS 12 FEET AND LARGER TO HAVE A 2–INCH METER AND RPZ BACKFLOW PREVENTER.

MANATEE COUNTY
PUBLIC WORKS DEPARTMENT

REV.BY	DATE
CLB/BR	11/10

MAY 10, 2011
DATE OF APPROVAL

WATER METER & BACKFLOW PREVENTER FOR PUMP STATIONS

US–15

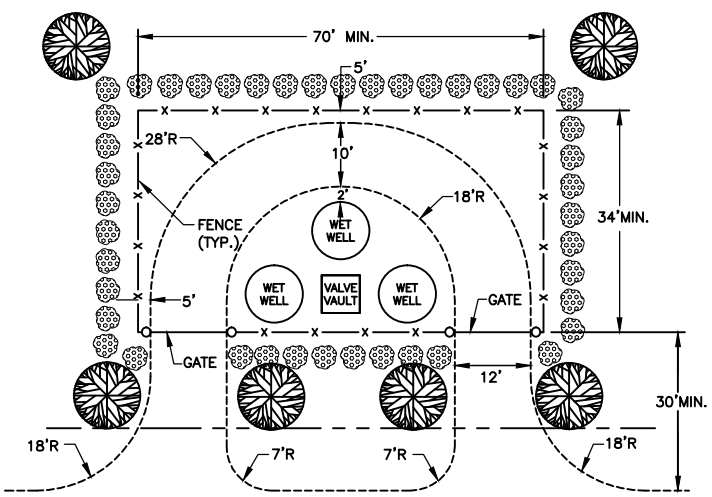

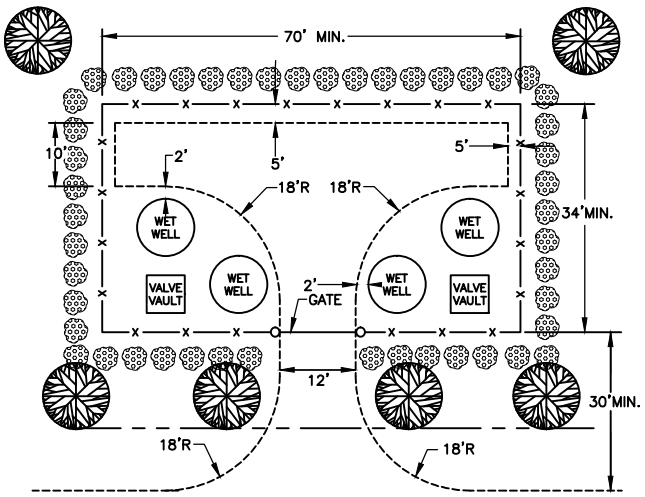

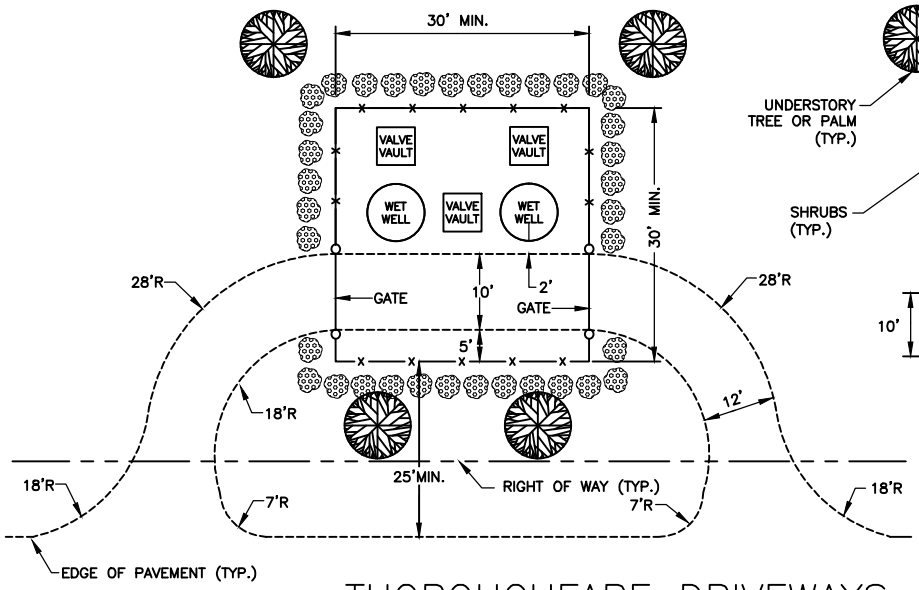

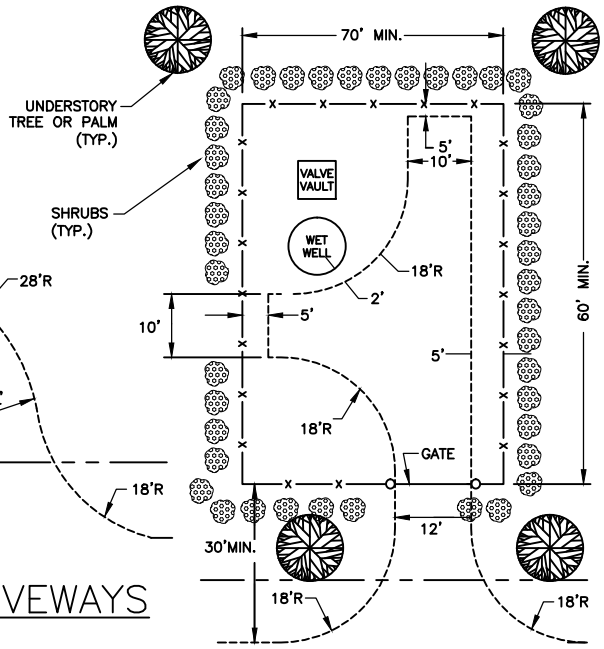

THOROUGHFARE DRIVEWAYS

N.T.S

NOTES:

1. A MINIMUM SETBACK OF 5 FT SHALL BE PROVIDED BETWEEN LIFT STATION STRUCTURES/EQUIPMENT AND THE FENCE.
2. LIFT STATION EASEMENT SHALL EXTEND A MINIMUM OF 15 FT BEYOND ALL FOUR SIDES OF THE LS SECURITY FENCE.
3. LIFT STATION SHALL BE ACCESSIBLE WITH A MINIMUM 30 FT WIDE CORRIDOR/EASEMENT.
4. A MINIMUM SETBACK OF 5 FT SHALL BE PROVIDED BETWEEN THE SHRUB'S BASE STEM AND THE LS SECURITY FENCE.
5. A MINIMUM SETBACK OF 10 FT SHALL BE PROVIDED BETWEEN THE TRUNK OF SMALL TREES AND THE LS SECURITY FENCE.
6. SPECIFIC LANDSCAPING REQUIREMENTS SHALL BE IN ACCORDANCE WITH SECTION 13.10 OF MANATEE COUNTY UTILITY STANDARDS.
7. DRIVEWAY MATERIALS SHALL BE IN ACCORDANCE WITH MANATEE COUNTY HIGHWAY & TRAFFIC STANDARDS FOR THE ENTIRE LENGTH OF THE DRIVEWAY.

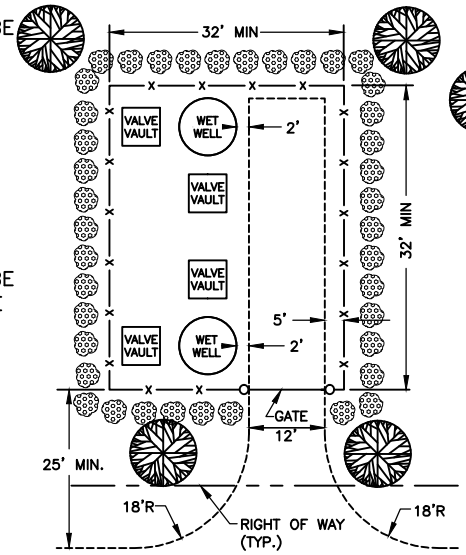

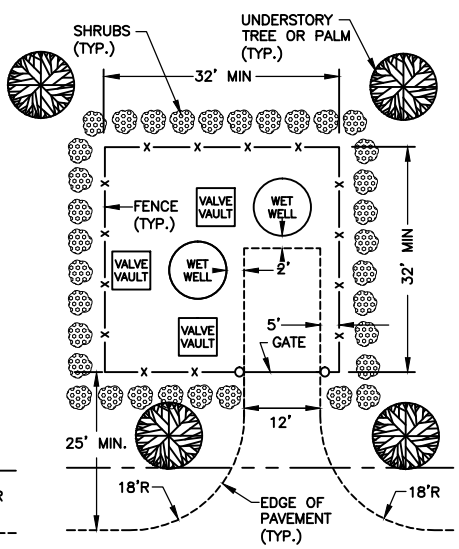

NON–THOROUGHFARE DRIVEWAYS

N.T.S

MANATEE COUNTY
PUBLIC WORKS DEPARTMENT

REV.BY	DATE
CLB/BR	11/10

MAY 10, 2011
DATE OF APPROVAL

MINIMUM ACCESS/EGRESS AND LANDSCAPING REQUIREMENTS FOR PUMP STATIONS

US–16

EXACT LAYOUT MAY VARY

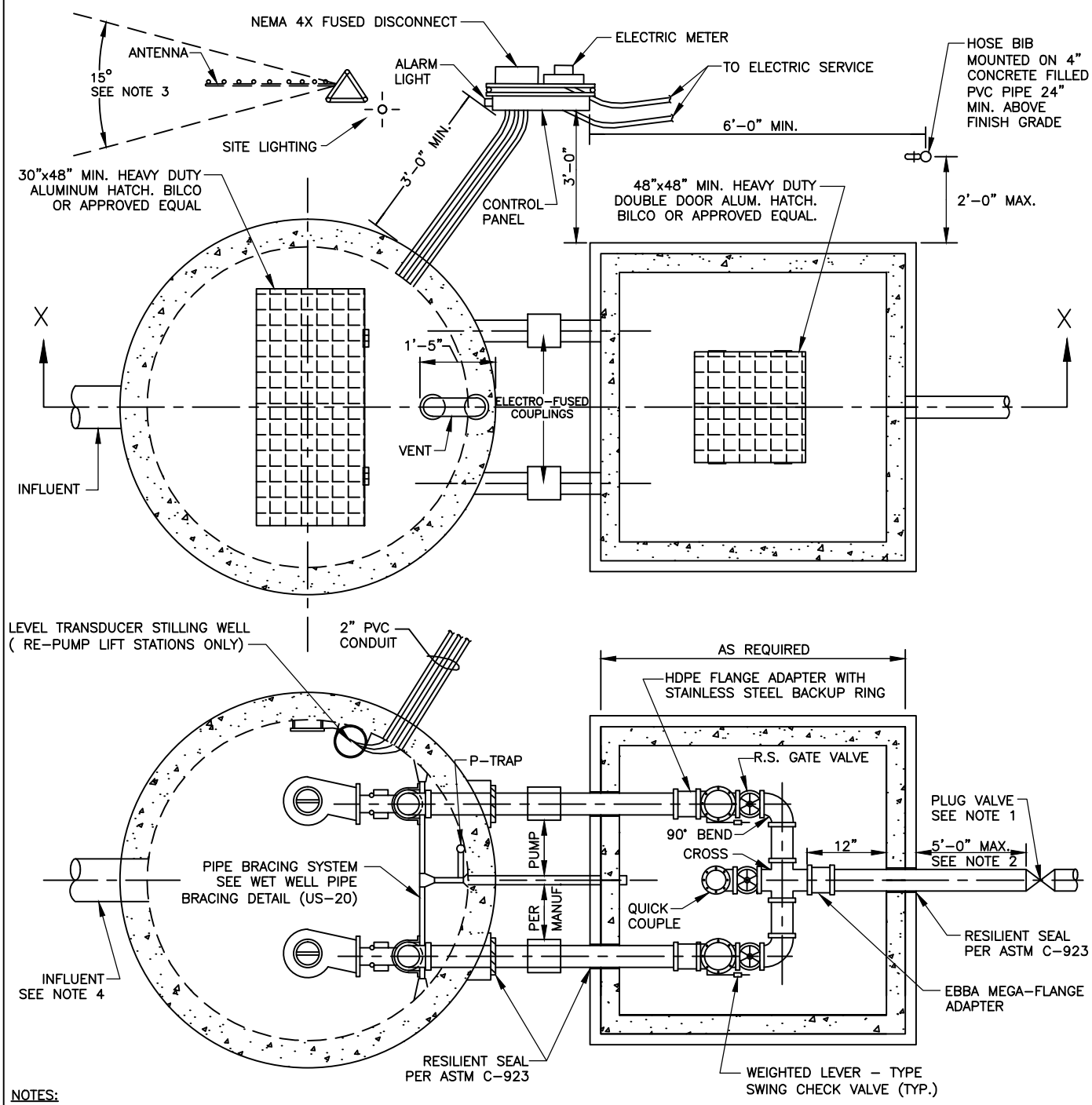

NOTES:

1. A FLOW METER AND FLOW METER VAULT SHALL BE INSTALLED UPSTREAM OF PLUG VALVE FOR ALL LIFT STATIONS THAT RE-PUMP SEWAGE FROM OTHER LIFT STATIONS.
2. FOR LIFT STATIONS WITH GRINDER PUMPS, THE FORCE MAIN SHALL BE AT LEAST 18 INCHES BELOW THE TOP SLAB WITHIN THE VALVE VAULT. A 90 DEGREE BEND, THAT IS TURNED DOWN, SHALL BE INSTALLED 18 INCHES OUTSIDE OF THE VALVE VAULT TO SUBSEQUENTLY OBTAIN A MINIMUM 3 FEET OF COVER OVER THE FORCEMAIN.
3. THE ANTENNA FOR THE RADIO TELEMETRY UNIT REQUIRES DIRECT LINE-OF-SIGHT SIGNALING CAPABILITY TO THE UTILITIES DEPARTMENT'S OFFICE THAT WILL RECEIVE THE SIGNAL. THERE SHALL BE AN UNOBSTRUCTED HORIZONTAL ANGLE OF FIFTEEN (15) DEGREES FROM THE ANTENNA MAST (7.5 DEGREES ON BOTH SIDES OF THE DIRECT LINE-OF-SIGHT AZIMUTH). NO TREE SHALL BE PLANTED WITHIN THE DESIGNATED UNOBSTRUCTED ANGLE FOR A TWENTY (20) FEET HORIZONTAL DISTANCE MEASURED FROM THE MAST. LANDSCAPE BUFFER PLANTINGS ARE TO BE FIELD ADJUSTED IN COORDINATION WITH THE LOCATION OF THE CONSTRUCTED TELEMETRY ANTENNA.
4. THE INFLUENT GRAVITY SEWER SHALL BE ALIGNED SO THAT FLOW DROPS BETWEEN THE PUMPS AS SHOWN ABOVE. AS AN OPTION, A DROP PIPE/BOWL MAY BE INSTALLED AS SHOWN IN STANDARD DETAIL US-20.
5. FOR SECTION X-X SEE WET WELL & VALVE VAULT SECTIONAL VIEW ON DETAIL US-18
6. CONCRETE SHALL BE TYPE II WITH 4,000 PSI 28-DAY COMPRESSIVE STRENGTH.

MANATEE COUNTY
PUBLIC WORKS DEPARTMENT

REV.BY	DATE
CLB/BR	11/10

MAY 10, 2011
DATE OF APPROVAL

SEWAGE PUMP STATION
WET WELL & VALVE
VAULT PLAN VIEW

US-17

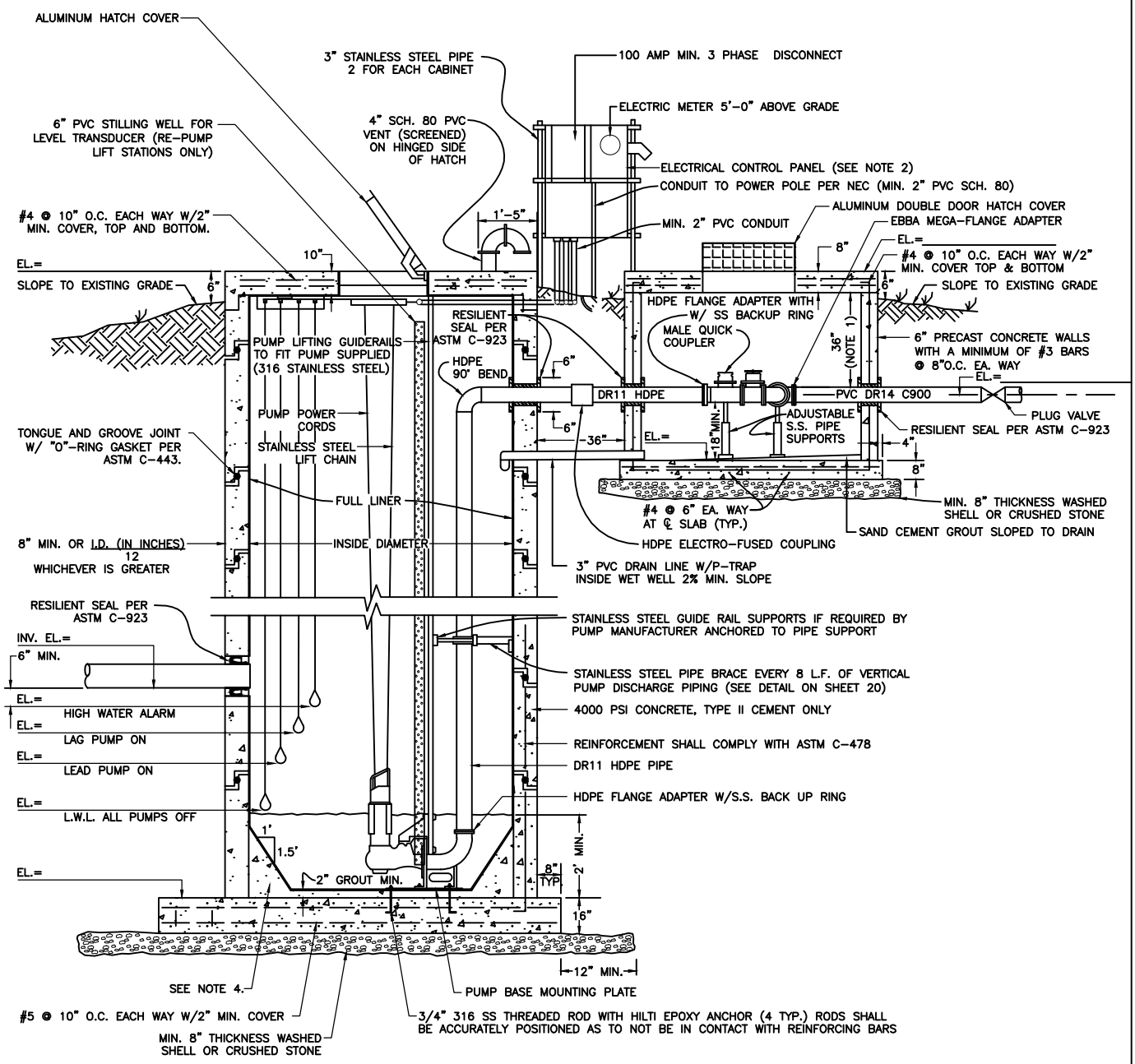

SECTION X-X

NOTES:

1. FOR LIFT STATIONS WITH GRINDER PUMPS, THE FORCE MAIN SHALL BE AT LEAST 18 INCHES BELOW THE TOP SLAB WITHIN THE VALVE VAULT. A 90 DEGREE BEND, THAT IS TURNED DOWN, SHALL BE INSTALLED 18 INCHES OUTSIDE OF THE VALVE VAULT TO OBTAIN A MINIMUM 3 FEET OF COVER.
2. FOR PROPER ORIENTATION OF CONTROL PANEL, SEE SHEET US-17.
3. 6" MINIMUM VERTICAL SPACING BETWEEN ALL PUMP AND ALARM CONTROL LEVELS.
4. 6" FILLET ALL AROUND FOR 6-FOOT DIAMETER WET WELL. 12" FILLET FOR 8-FOOT AND LARGER WET WELLS.

MANATEE COUNTY
PUBLIC WORKS DEPARTMENT

REV.BY	DATE
CLB/BR	11/10

MAY 10, 2011
DATE OF APPROVAL

SEWAGE PUMP STATION WET WELL & VALVE VAULT SECTIONAL VIEW

US-18

GENERAL LIFT STATION NOTES:

1. ALL ACCESS COVERS SHALL BE ALUMINUM, WITH STAINLESS STEEL HARDWARE AND RATED FOR 300 P.S.F. LOADING. ALL ALUMINUM SURFACES IN CONTACT WITH CONCRETE SHALL HAVE 2 COATS BITUMASTIC EPOXY, TOTAL 16 MILS DFT. ALL ACCESS COVERS SHALL BE EQUIPPED WITH A LOCKING STAPLE OR BAR FOR USE WITH A PADLOCK. PADLOCKS FOR WETWELL, VALVE VAULT, FENCE GATE AND CONTROL PANELS OF PUBLICLY OWNED & MAINTAINED LIFT STATIONS SHALL BE FURNISHED BY THE MANATEE COUNTY UTILITIES DEPARTMENT.
2. INSTALL WET WELL VENT ON THE HINGED SIDE OF THE WET WELL HATCH COVER.
3. GROUND SHALL BE SLOPED AWAY FROM SLAB TO NATURAL GROUND ELEVATION IN ALL DIRECTIONS. SITE SHALL INCLUDE A WEED BARRIER FABRIC THAT IS COVERED WITH WASHED SHELL OR ROCK WITHIN LIFT STATION FENCING, SITE SHALL INCLUDE A WEED BARRIER FABRIC THAT IS COVERED WITH SHREDDED WOOD TYPE MULCH UNDER THE SHRUBS AND UP TO OUTSIDE OF THE FENCE. WEED BARRIER FABRIC THAT IS COVERED WITH SHREDDED WOOD–TYPE MULCH SHALL BE LOCATED UNDER THE TREES FOR A MINIMUM DISTANCE OF 3 FEET FROM THE TREE. SODDING OR SHREDDED WOOD–TYPE MULCH SHALL BE INSTALLED ON THE REMAINDER OF THE SITE TO THE EDGE OF THE EASEMENT.
4. DUCTILE IRON OR CAST IRON VALVES SHALL HAVE A FACTORY APPLIED FUSION BONDED EPOXY OR EPOXY EXTERIOR AND INTERIOR COATING PER AWWA C550. IRON FITTINGS WILL HAVE PROTECTO 401 OR EQUAL COATING INSIDE AND OUTSIDE.
5. ALL FORCE MAIN PIPING AND FITTINGS WITHIN THE WETWELL AND THE VALVE VAULT, FROM THE PUMP BASE ELBOW TO THE CHECK VALVE, SHALL BE DR11 HDPE. ALL CONNECTIONS TO IRON BODIED FLANGE FITTINGS IN THE WETWELL (PUMP BASE ELLS) AND TO THE VALVE VAULT CHECK VALVES SHALL BE MADE USING HDPE FLANGE ADAPTERS WITH 316 STAINLESS STEEL BACKUP RINGS. ALL HDPE CONNECTIONS SHALL BE THERMAL FUSED OR ELECTRO–FUSED. ALL PIPING DOWNSTREAM OF THE CROSS IN THE VALVE VAULT TO THE PLUG VALVE SHALL BE PVC DR 14 C–900.
6. ALL PIPING SHALL BE COLOR CODED IN ACCORDANCE WITH THESE STANDARDS. GREEN–RAW SEWAGE; PANTONE 522C PURPLE–RECLAIMED: BLUE–POTABLE WATER.
7. ANCHORS & LIFTING DEVICES SHALL NOT PENETRATE THE WALLS OF THE WET WELL.
8. ALL INTERIOR SURFACES OF WET WELL SHALL BE LINED. SEE STANDARD PRE–CAST SANITARY SEWER MANHOLE FOR TURBULENT FLOW DETAIL.
9. ALL METAL APPURTENANCES INCLUDING BOLTS, NUTS AND WASHERS INSIDE THE WET WELL AND VALVE VAULT SHALL BE STAINLESS STEEL UNLESS OTHERWISE NOTED (TYPE 316). ALL STAINLESS STEEL BOLTS SHALL BE TREATED WITH NEVER–SEIZE PRIOR TO ASSEMBLY.
10. VERTICAL HDPE PUMP DISCHARGE PIPE IN THE WET WELL SHALL BE BRACED EVERY EIGHT (8) LINEAR FEET TO PREVENT EXCESSIVE BOWING. THE PIPE SHALL BE CLAMPED TO A SINGLE LENGTH OF 1–5/8" STAINLESS STEEL CHANNEL INSTALLED HORIZONTALLY AND ANCHORED TO THE WET WELL WALL AT EACH END WITH A CENTER BRACE OF 1–5/8" CHANNEL ATTACHED TO THE BACK OF THE WET WELL. THE PIPE CLAMPS SHALL BE A MINIMUM OF 1–1/2" WIDE, 12 GA. STAINLESS STEEL. WET WELLS LARGER THAN 8 FEET OR PIPING LARGER THAN 6 INCHES SHALL HAVE BRACING CONSTRUCTED FROM 1/4 INCH X 4 INCH STAINLESS STEEL ANGLE.
11. VALVE & METER VAULTS SHALL BE PRECAST TYPE II REINFORCED CONCRETE.
12. CONTRACTOR SHALL TAKE ALL NECESSARY PRECAUTIONS TO PREVENT FLOTATION DURING CONSTRUCTION. ENGINEER SHALL SUBMIT FLOTATION CALCULATIONS ALONG WITH HYDRAULIC CALCULATIONS TO MCPWD ENGINEERING SERVICES DIVISION AT CONSTRUCTION PLAN REVIEW SUBMITTAL.
13. TOP OF WETWELL'S AND VALVE VAULT'S TOP SLABS SHALL BE AT THE SAME ELEVATION.
14. FOR 5/8" WATER METER, PROVIDE POTABLE WATER SERVICE CONNECTION WITH 3/4" BRASS LOCKSHIELD AND LOOSE KEY HOSE BIB. PROVIDE WATTS 909 BACKFLOW PREVENTER (OR APPROVED EQUAL). ALL WATER SERVICE PIPING FROM WATER METER TO BE TYPE "K" COPPER OR BRASS, 3/4" MIN. DIAMETER FOR 5/8" METER AND 2" MIN. DIAMETER PIPING FOR 2" METER.
15. LANDSCAPING SHALL BE IRRIGATED WITH NON–POTABLE WATER. A RAIN SENSOR SHALL BE FURNISHED AND INSTALLED.
16. HOSE BIB TO BE A MAXIMUM OF 2 FEET FROM THE VALVE VAULT, A MINIMUM OF 6 FEET FROM THE ELECTRICAL CONTROL PANEL, 24" ABOVE THE SURROUNDING FINISH GRADE, AND ANCHORED TO A 4" PVC CONCRETE FILLED PIPE.
17. WATER METER ASSEMBLY TO BE INSTALLED BY CONTRACTOR AS PART OF WATER SERVICE CONNECTION WITH FEES PAID BY THE DEVELOPER.
18. BASE AND FIRST WALL SECTION SHALL BE MONOLITHIC.
19. EVERY EFFORT SHALL BE MADE BY THE CONTRACTOR TO CONSTRUCT WATERTIGHT STRUCTURES WITH NO VISIBLE LEAKS. COMPLETED STRUCTURES THAT ARE NOT WATERTIGHT AND/OR DO NOT MEET THE REQUIREMENTS OF ASTM C–443 WILL BE REJECTED.
20. FLEXIBLE GASKET CONNECTORS SHALL MEET THE REQUIREMENTS OF ASTM C–923 LATEST REVISION AND ARE REQUIRED IN ALL MANHOLES.
21. ALL GATE VALVES SHALL BE RESILIENT SEAT IN ACCORDANCE WITH THESE STANDARDS.
22. ELECTRICAL SERVICE SHALL BE 3 PHASE MINIMUM UNLESS THE ELECTRICAL UTILITY PROVIDES CORRESPONDENCE STATING THAT 3 PHASE SERVICE IS UNAVAILABLE.
23. ELECTRICAL CONDUIT SHALL BE RUN BY THE SHORTEST ROUTE POSSIBLE FROM THE ELECTRICAL SOURCE TO THE CONTROL PANEL AND FROM THE CONTROL PANEL TO THE LIFT STATION WET WELL. NO ELECTRICAL SHALL BE INSTALLED BETWEEN THE WET WELL AND VALVE VAULT STRUCTURES.
24. THE VALVE VAULT SHALL HAVE A MINIMUM CLEARANCE OF 12" FROM FLANGES TO THE VALVE VAULT WALL, 18" FROM FLANGES TO THE VALVE VAULT FLOOR AND 12" FROM THE CROSS TO THE VALVE VAULT WALL AT THE FORCE MAIN EXIT POINT.
25. A FLOW METER, BACKUP POWER GENERATOR, FUEL STORAGE LEVEL TRANSDUCER AND FORCE MAIN PRESSURE TRANSDUCER SHALL BE REQUIRED FOR ALL LIFT STATIONS THAT REPUMP SEWAGE FROM OTHER LIFT STATIONS.
26. THE CONTROL PANEL, HOSE BIB, EMERGENCY GENERATOR, FUEL STORAGE TANK AND ANTENNA SHALL NOT BE LOCATED BETWEEN THE WETWELL, VALVE VAULT AND THE DRIVEWAY. THE GENERATOR SHALL NOT BE LOCATED WITHIN 25 FEET OF THE EDGE OF THE LIFT STATION EASEMENT AT THE ROW LINE.

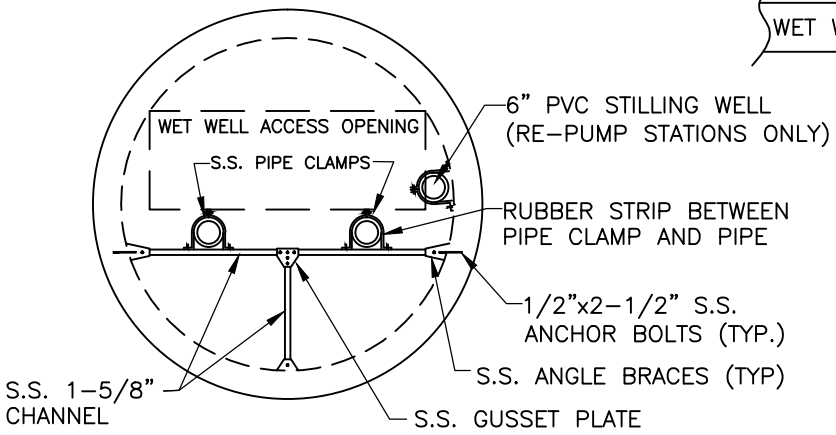

WET WELL PIPE BRACING DETAIL

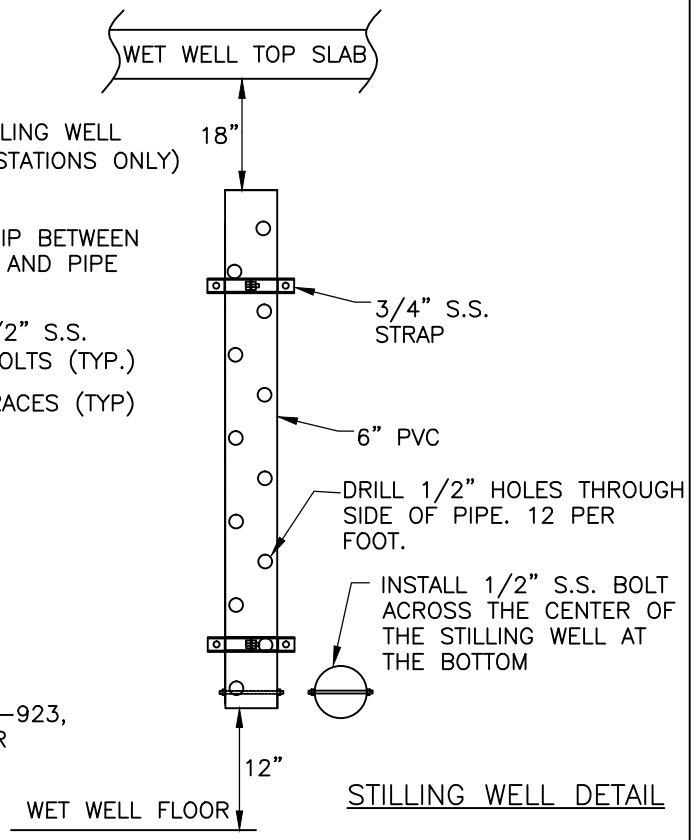

STILLING WELL DETAIL

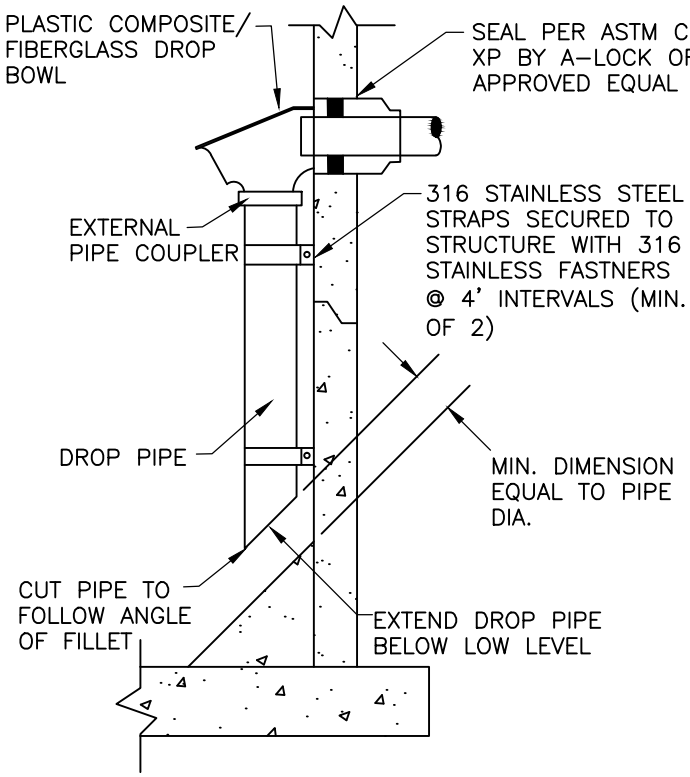

INFLUENT DROP PIPE/BOWL

PUMP DATA AND DESIGN CHARACTERISTICS	
NUMBER OF PUMPS	
DESIGN CAPACITY PER PUMP, GPM	
TOTAL DYNAMIC HEAD, FEET	
MINIMUM EFFICENCY AT DESIGN CAPACITY %	
HORSEPOWER PER PUMP, H.P.	
SHUT-OFF HEAD, FEET	
MAX. SIZE SOLIDS, INCHES	
DISCHARGE SIZE, INCHES	
PUMP MANUFACTURER & MODEL NUMBER	
IMPELLER DIAMETER, INCHES	
PUMP R.P.M.	
ELECTRICAL SERVICE - VOLTAGE & PHASE	
FORCE MAIN - LENGTH, DIAMETER & MATERIAL	
FORCE MAIN DISCHARGE ELEV. & HIGHEST ELEV.	

NOTES:

1. STILLING WELL FOR LEVEL TRANSDUCER REQUIRED FOR RE-PUMP STATIONS ONLY.
2. REFER TO STANDARD DETAILS US-17, US-18 & US-19 FOR PUMP STATION DETAILS.

MANATEE COUNTY
PUBLIC WORKS DEPARTMENT

REV.BY	DATE
CLB/DOM	11/10

MAY 10, 2011
DATE OF APPROVAL

PUMP STATION, DROP, PIPE BRACING, & STILLING WELL DETAILS

US-20

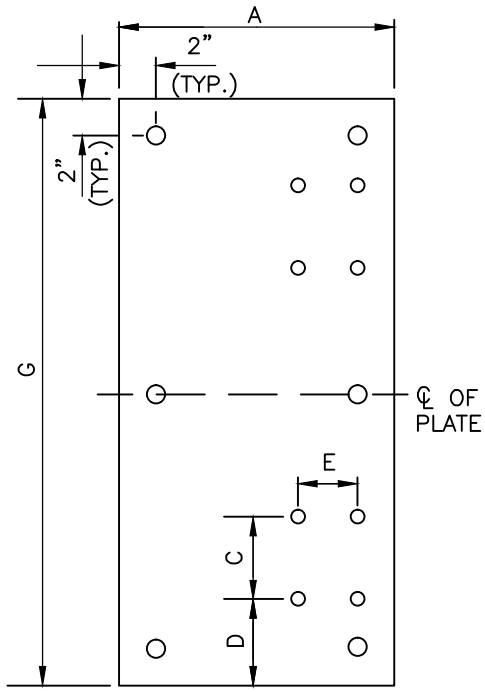

PLAN FOR PUMPS 2" AND SMALLER

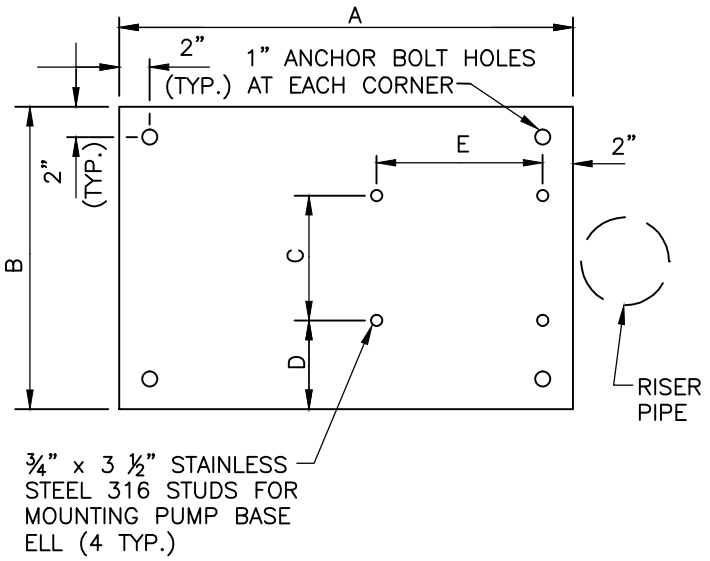

PLAN

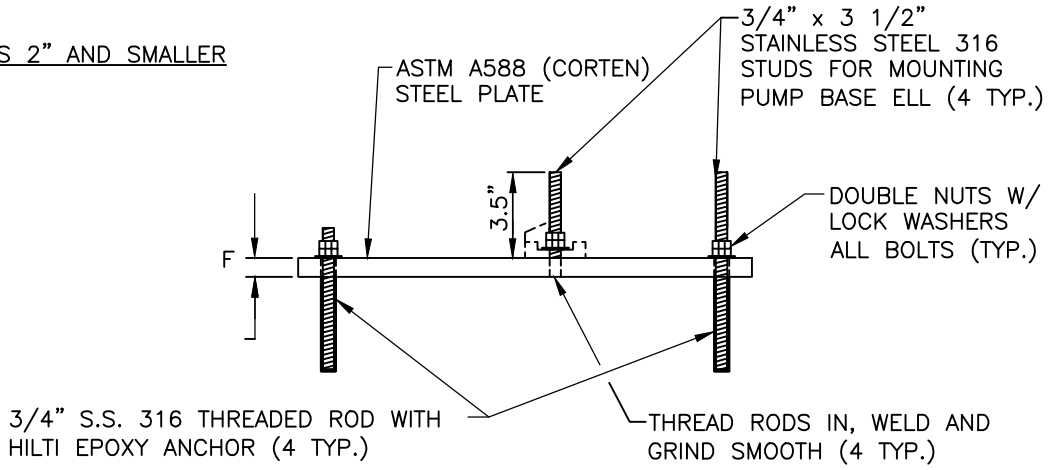

PROFILE

PUMP BASE ELL MOUNTING PLATE DIMENSIONS							
DIMENSIONS	A	B	C	D	E	F	G
FOR 6" PUMPS	24"	20"	8.25"	5.875"	11"	¾"	N/A
FOR 4" PUMPS	20"	16"	6"	5"	10"	½"	N/A
2" PUMPS & SMALLER	15"	N/A	4.5"	4.75"	3.25"	½"	32"

NOTES:

1. INSTALL DOUBLE NUTS ON ALL EIGHT (8) THREADED RODS.
2. THE PLATE EDGES AND ALL HOLES SHALL BE GROUND SMOOTH TO REMOVE ALL BURRS.
3. DIMENSIONS "C" & "E" ARE FOR BARNEY'S PUMPS, INC. BASE ELLS.
4. FOR PUMPS WITH A 2-INCH DISCHARGE OR LESS, A SINGLE BASE PLATE SHALL BE INSTALLED UNDER BOTH GRINDER PUMPS.

MANATEE COUNTY
PUBLIC WORKS DEPARTMENT

REV.BY	DATE
CLB/DOM	11/10

MAY 10, 2011
DATE OF APPROVAL

PUMP BASE ELL
MOUNTING PLATE

US-21

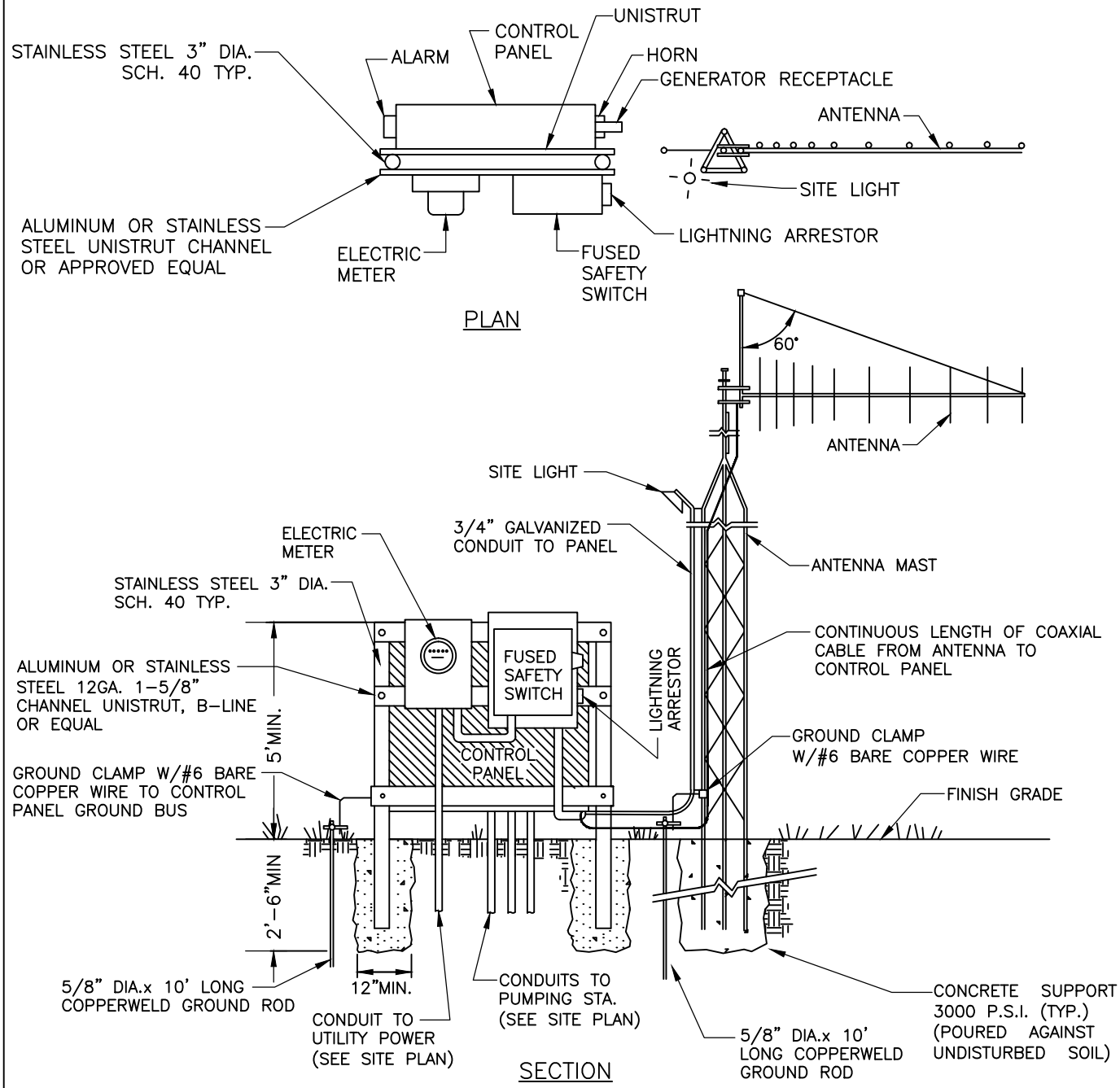

TYPICAL SERVICE ENTRANCE STRUCTURE

NOTES

1. ALL EQUIPMENT FURNISHED FOR THE PUMP STATION SHALL CONFORM TO MANATEE COUNTY PUBLIC WORKS UTILITY STANDARDS.
2. POWER TO BE SUPPLIED AS DIRECTED, THE CONTRACTOR SHALL BE RESPONSIBLE FOR ALL COSTS ASSOCIATED WITH PROVIDING TEMPORARY AND PERMANENT ELECTRICAL SERVICE.
3. ALL CONDUIT ENTERING THE CONTROL PANEL SHALL BE SEALED WITH INDUSTRIAL FOAM.
4. CONTROL AND FLOW METER ENCLOSURE TO BE NEMA 3R 304 STAINLESS STEEL WITH RAIN SHIELD. DISCONNECT ENCLOSURE TO BE NEMA 4X STAINLESS STEEL.
5. ALL P.V.C. CONDUIT SHALL BE SCHEDULE 80.
6. ALL STATIONS WHICH REPUMP SEWAGE FROM OTHER OTHER LIFT STATIONS SHALL BE EQUIPPED WITH A FLOW METER WITH ABOVE GROUND TRANSMITTER IN WEATHER PROOF HOUSING, A PRESSURE TRANSDUCER TO MONITOR FORCE MAIN PRESSURES, AND A TRANSDUCER AS THE PRIMARY LEVEL SENSOR MOUNTED INSIDE A STILLING WELL IN THE WET WELL.
7. ANTENNA MAST SHALL BE RATED FOR 150 MPH WINDS
8. IF ANTENNA MAST IS MORE THAN 18" FROM PANEL RUN CONDUIT FOR SITE LIGHT UNDERGROUND.

MANATEE COUNTY
PUBLIC WORKS DEPARTMENT

REV.BY	DATE
CLB/DOM	11/10

MAY 10, 2011
DATE OF APPROVAL

SEWAGE PUMP STATION METER & ELECTRICAL DETAILS

US-22

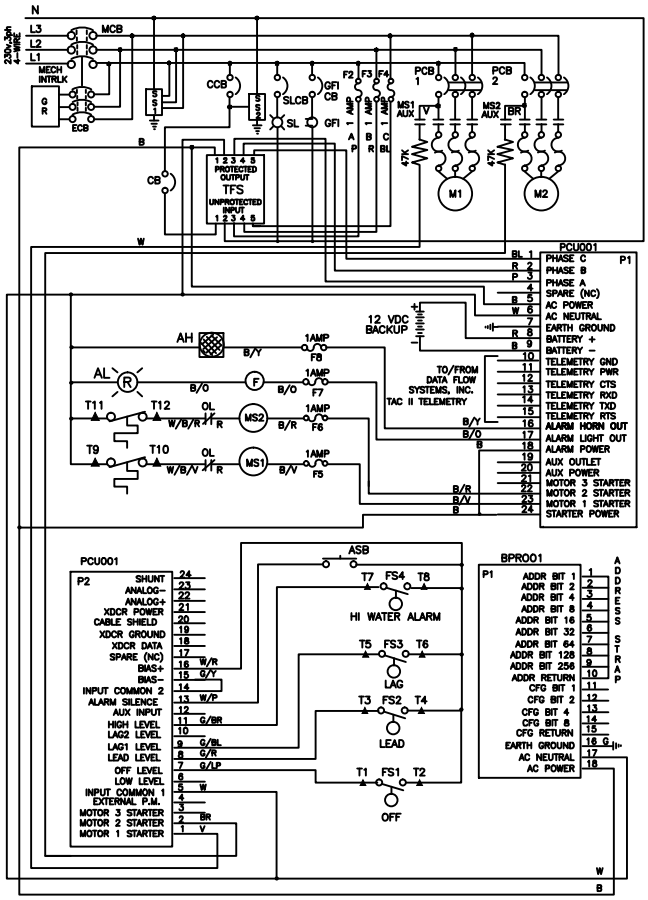

PANEL COMPONENTS

ENC	ENCLOSURE	HOFFMAN, A–36H3012SSLP 304SS
MCB	MAIN CIRCUIT BREAKER	SQ–D, QOU
ECB	EMERGENCY CIRCUIT BREAKER	SQ–D, QOU
PCB	PUMP CIRCUIT BREAKER	SQ–D, QOU
CCB	CONTROL CIRCUIT BREAKER	SQ–D, QOU115
GFICB	GFI CIRCUIT BREAKER	SQ–D, QOU115
MS1,2	STARTER	FURNAS, ESP–100
GR	GENERATOR RECEPTACLE	RUSSELL STOLL, JRSB1044FR
AH	ALARM HORN	FEDERAL, 350–WB–120
AL	ALARM LIGHT	INGRAM, LRXB–40
F	FLASHER	INGRAM, FL–120–60
ASB	ALARM SILENCE BUTTON	SQ–D, 9001 SKR1BH5
GFI	CONVIENENCE RECEPTACLE	LEVITON, 6598–I
TCU	TELEMETRY CONTROL UNIT	DATA FLOW, DFS TCU001
CB	CIRCUIT BREAKER	E–T–A, ETA–42–01
F2–8	FUSE AND HOLDER	WAGO, DFS–00271–003–9, 1AMP SB
47K	RESISTER BLOCK	WAGO, DFS–00271–003–1
TFS	TRASIENT FILTER SHIELD	DATA FLOW TFS001–02
12VDC	BATTERY BACKUP	YUASA, NP2.6–12 12 VDC @ 2.6AM
SS1	230V SURGE SUPRESSOR (TPS001)	DITEK, DFS PN# 005–0062
SS2	120V SURGE SUPRESSOR (SPS001)	DITEK, DFS PN# 005–0061
TB1	TERMINAL BLOCK (24V) TERMINAL	IDEAL, 89–212
TB2	BLOCK (ALL OTHERS)	IDEAL, 89–212
SLB	SITE LIGHTING CIRCUIT BREAKER	SQ–D, QOU120
FMB	FLOW METER CIRCUIT BREAKER (RE–PUMP LIFT STATIONS ONLY)	SQ–D, QOU120
SL	SITE LIGHT	

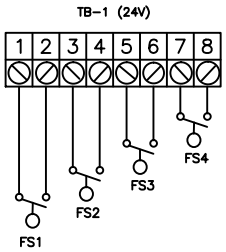

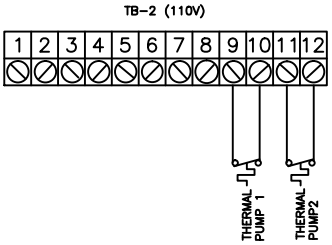

COLOR CODE

SYMBOL	COLOR
B	BLACK
W	WHITE
G	GREEN
BL	BLUE
R	RED
P	PINK
V	VIOLET
BR	BROWN
B/Y	BLACK/YELLOW
B/O	BLACK/ORANGE
B/R	BLACK/RED
B/V	BLACK/VIOLET
G/LP	GREY/LIGHT PINK
G/R	GREY/RED
G/BL	GREY/BLUE
G/BR	GREY/BROWN
W/P	WHITE/PINK
G/Y	GREY/YELLOW
W/R	WHITE/RED
W/B/V	WHT/BLK/VIOLET
W/B/R	WHT/BLK/RED

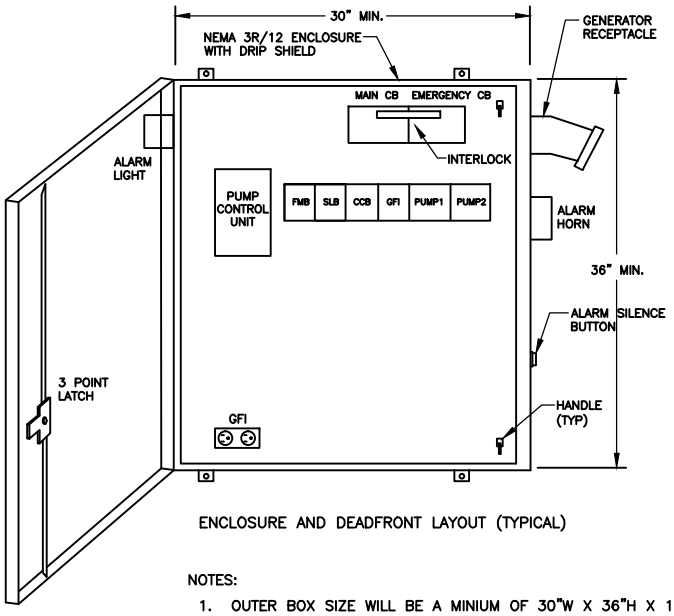

ENCLOSURE AND DEADFRONT LAYOUT (TYPICAL)

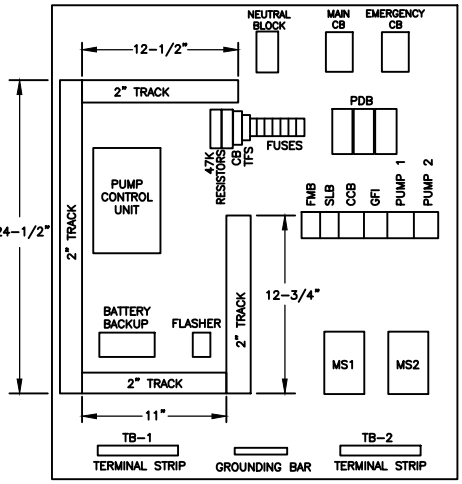

BACKPLATE LAYOUT (TYPICAL)

NOTES:

1. OUTER BOX SIZE WILL BE A MINIUM OF 30"W X 36"H X 12"D.
2. DEAD FRONT DOOR SHALL HAVE A MINIMUM OF TWO LATCHES.
3. THIS DETAIL FOR PUMPS 20 H.P. AND BELOW.
4. THE FLOW METER CIRCUIT BREAKER (FMB) IS ONLY REQUIRED FOR RE–PUMP LIFT STATIONS

MANATEE COUNTY
PUBLIC WORKS DEPARTMENT

REV.BY	DATE
CLB/KE	11/10

MAY 10, 2011
DATE OF APPROVAL

SEWAGE PUMP STATION
CONTROL PANEL
(230V)

US–23

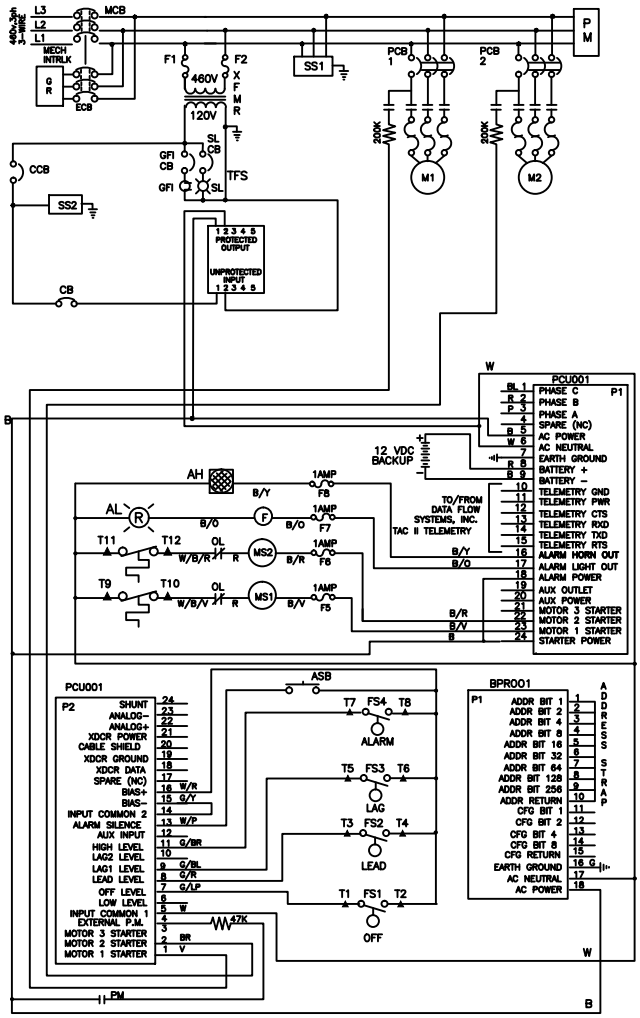

PANEL COMPONENTS

ENC	ENCLOSURE	HOFFMAN, A–48H3612SSLP
MCB	MAIN CIRCUIT BREAKER	SQ–D, FAL
ECB	EMERGENCY CIRCUIT BREAKER	SQ–D, FAL
PCB	PUMP CIRCUIT BREAKER	SQ–D, FAL
CCB	CONTROL CIRCUIT BREAKER	SQ–D, QOU115
GFICB	GFI CIRCUIT BREAKER	SQ–D, QOU115
MS1,2	STARTER	FURNAS ESP–100
GR	GENERATOR RECEPTACLE	RUSSELL STOLL, JRSB2034HR
AH	ALARM HORN	FEDERAL, 350–WB–120
AL	ALARM LIGHT	INGRAM, LRXB–40
F	FLASHER	INGRAM, FL–120–60
ASB	ALARM SILENCE BUTTON	SQ–D, 9001 SKR1BH5
GFI	CONVIENENCE RECEPTACLE	LEVITON, 6598–I
XFMR	TRANSFORMER	SQ–D, 7410 3S1F
F1,2	FUSES	BUSS, FNQ10
PM	PHASE MONITOR	DIVERSIFIED, SLA–440–ASA
TCU	TELEMETRY CONTROL UNIT	DATA FLOW, DFS TCU001
CB	CIRCUIT BREAKER	E–T–A, ETA–42–01
F4–7	FUSE AND HOLDER	WAGO, DFS–00271–003–9, 1AMPSB
47K	RESISTER BLOCK	WAGO, DFS–00271–003–1
TFS	TRASIENT FILTER SHIELD	DATA FLOW TFS001–02
12VDC	BATTERY BACKUP	YUASA, NP2.6–12 12 VDC @ 2.6AM
SS1	480V SURGE SUPRESSOR (TPS001)	DITEK, DTK–480–3CM
SS2	120V SURGE SUPRESSOR (SPS001)	DITEK, DFS PN# 005–0061
TB1	TERMINAL BLOCK (24V)	IDEAL, 89–212
TB2	TERMINAL BLOCK (ALL OTHERS)	IDEAL, 89–212
SLB	SITE LIGHTING CIRCUIT BREAKER	SQ–D, QOU120
FMB	FLOW METER CIRCUIT BREAKER (RE–PUMP LIFT STATIONS ONLY)	SQ–D, QOU120
SL	SITE LIGHT	

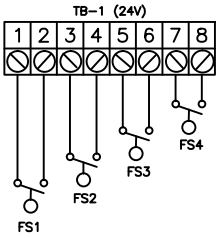

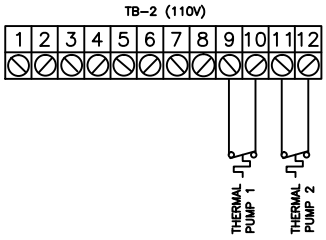

COLOR CODE

SYMBOL	COLOR
B	BLACK
W	WHITE
G	GREEN
BL	BLUE
R	RED
P	PINK
V	VIOLET
BR	BROWN
B/Y	BLACK/YELLOW
B/O	BLACK/ORANGE
B/R	BLACK/RED
B/V	BLACK/VIOLET
G/LP	GREY/LIGHT PINK
G/R	GREY/RED
G/BL	GREY/BLUE
G/BR	GREY/BROWN
W/P	WHITE/PINK
G/Y	GREY/YELLOW
W/R	WHITE/RED
W/B/V	WHT/BLK/VIOLET
W/B/R	WHT/BLK/RED

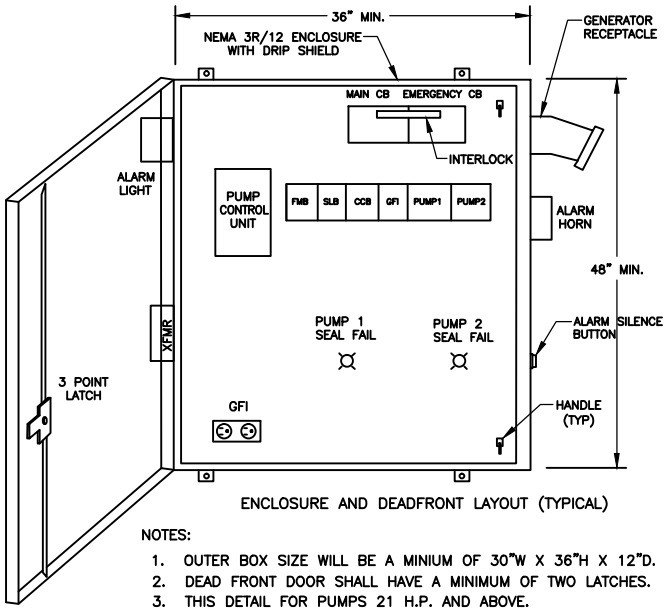

ENCLOSURE AND DEADFRONT LAYOUT (TYPICAL)

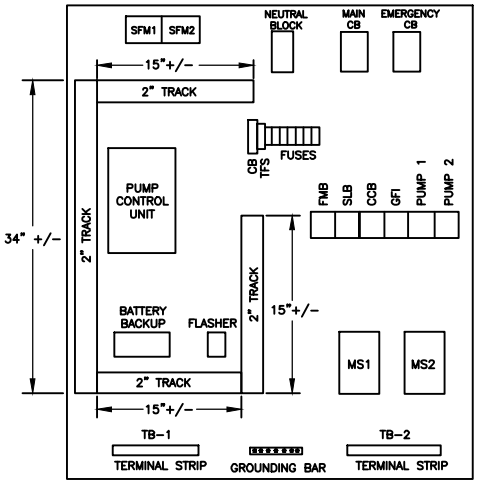

BACKPLATE LAYOUT (TYPICAL)

NOTES:

1. OUTER BOX SIZE WILL BE A MINIUM OF 30"W X 36"H X 12"D.
2. DEAD FRONT DOOR SHALL HAVE A MINIMUM OF TWO LATCHES.
3. THIS DETAIL FOR PUMPS 21 H.P. AND ABOVE.
4. SIZE 3 AND LARGER MOTOR STARTERS REQUIRE A STARTER COIL ISOLATION RELAY.
5. THE CONTROL TRANSFORMER SHALL BE MOUNTED ON THE EXTERIOR OF THE PANEL.
6. THE FLOW METER CIRCUIT BREAKER (FMB) IS ONLY REQUIRED FOR RE–PUMP LIFT STATIONS.

MANATEE COUNTY
PUBLIC WORKS DEPARTMENT

REV.BY	DATE
CLB/KE	11/10

MAY 10, 2011
DATE OF APPROVAL

SEWAGE PUMP STATION
CONTROL PANEL
(460V)

US–24

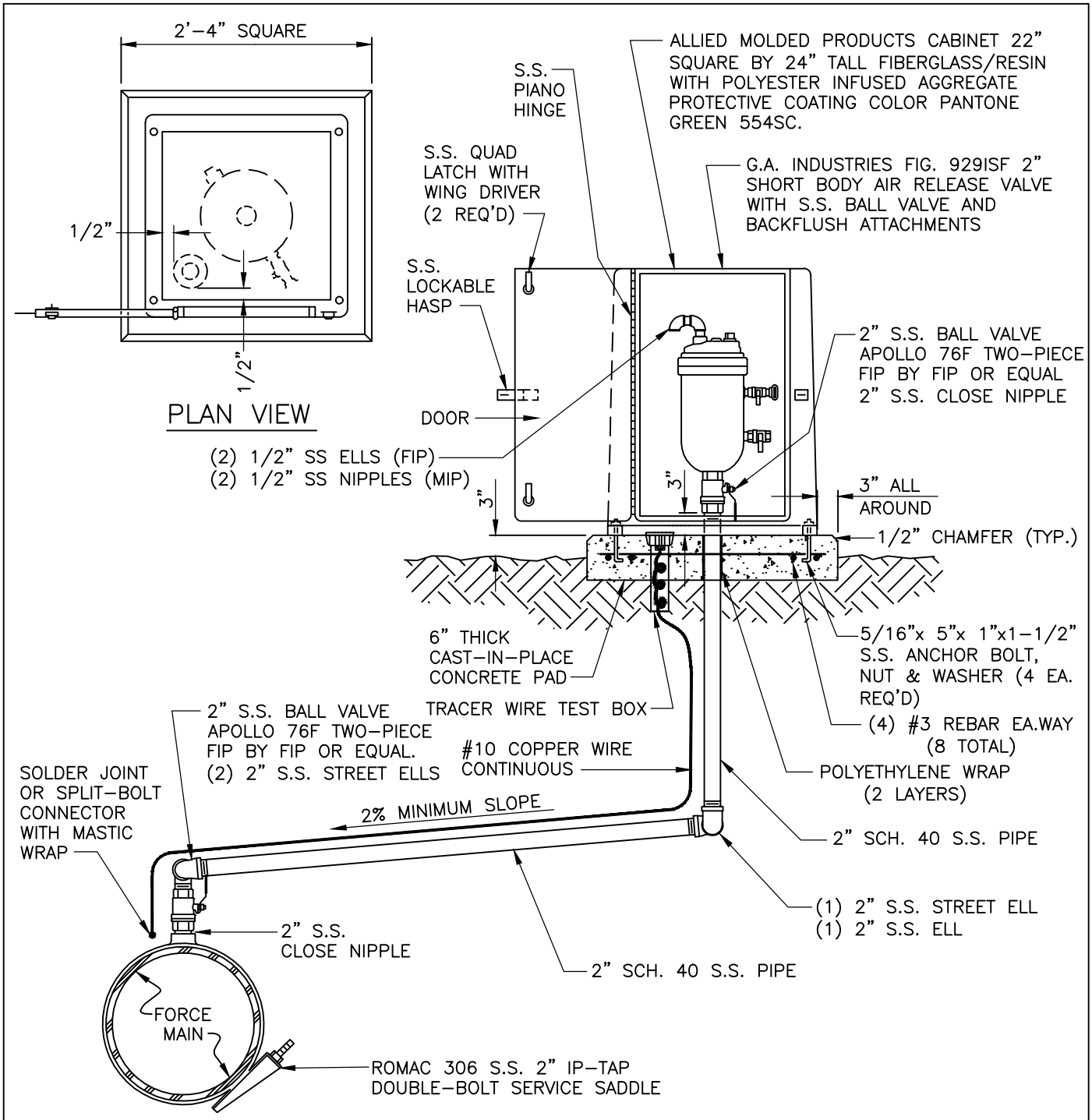

NOTES:

1. AIR RELEASE VALVES TO BE INSTALLED AT HIGH POINTS, OR WHERE AIR WOULD BE ENTRAPPED, ALONG 4" AND LARGER FORCE MAINS.
2. FORCE MAIN VERTICAL ALIGNMENT TO BE DESIGNED SUCH THAT THE MINIMUM NUMBER OF REQUIRED AIR RELEASE VALVES ARE INSTALLED.
3. ALL INCIDENTAL FITTINGS AND HARDWARE TO BE STAINLESS STEEL.
4. ALL PIPE THREADS TO BE SEALED AIR TIGHT.
5. VENT PIPE TO BE LAID ACCURATELY ON SLOPE, WITHOUT HIGH OR LOW POINTS.
6. AIR RELEASE VALVES TO BE IN BELOW-GRADE INSTALLATIONS UNLESS IMPRACTICAL. INSTALLATIONS MAY BE ABOVE-GROUND ONLY WHERE APPROVED AND SPECIFICALLY INDICATED ON THE PLAN.
7. CONCRETE PAD SHALL BE TYPE I CONCRETE W/ 3,000 P.S.I., 28 DAY COMPRESSIVE STRENGTH.

MANATEE COUNTY PUBLIC WORKS DEPARTMENT			ABOVE-GROUND AIR RELEASE VALVE ASSY. FOR FORCE MAINS	US-25
REV.BY	DATE			
CLB/KE	11/10	MAY 10, 2011 DATE OF APPROVAL		

MANATEE COUNTY
PUBLIC WORKS STANDARDS

PART 2. STORMWATER MANAGEMENT DESIGN MANUAL

June 2015

Manatee County
Public Works Standards

Part 2. Stormwater Management Design Manual

June 2015

TALE OF CONTENTS

MANATEE COUNTY
PUBLIC WORKS STANDARDS MANUAL

PART 2 - STORMWATER MANAGEMENT DESIGN

SECTION 2.1. OVERVIEW

The purpose of this Stormwater Design Procedure Manual is to ensure that an effective management system for an area to be developed or redeveloped is provided. These criteria will provide the basis on which a stormwater management plan will be evaluated by the County prior to approval and ultimate construction. The criteria are a minimum and in certain cases the County may require higher criteria to ensure a properly functioning system to safeguard adjacent or downstream properties, public roadway and drainage systems, and the general public.

In order to aid in understanding the criteria presented in this Manual, a full explanation of the various procedures required for implementation of this criteria is presented.

It is suggested that, prior to the start of the detailed engineering on any project, the proposed preliminary drainage design and procedures be reviewed in detail with the Public Works Department.

The limitation of run-off will require the construction of retention or detention basins. Detention or retention basins will provide the necessary reservoir storage to insure predevelopment flow rates are not exceeded. Manatee County requires that, when possible, large natural conveyance systems in an area to be developed or redeveloped should be preserved (kept in their natural state and without reduction in conveyance capacity), to provide for the passage of stormwater run-off from adjacent and/or upstream areas.

In all cases, attenuated discharge from detentions basins must be to a County approved positive outfall.

The treatment of the appropriate volume of run-off, or in accordance with SWFWMD 40D-4 and 40D-40, 45, or latest revision, from the contributory area of a development will be required. Development within certain watershed boundaries may require additional stormwater treatment. Also, sediment and erosion control measures will be required to control and minimize damage to downstream property, and the conveyance system and to preserve water quality. Stormwater designs including sediment and erosion control measures shall be submitted to and approved by the Public Works Department prior to construction.

For purposes of system evaluation, a stormwater management system will be considered to have two parts, the interior drainage system and the primary drainage system.

The interior drainage system shall consist of swales and/or storm sewers adjacent to or in the streets to carry stormwater run-off from the lots adjacent to these streets to culverts or through lot lines directly to the detention or retention basins or to the interior drainage system and convey it directly to the detention or retention basins (all commercial, residential, industrial sites).

The primary drainage system shall consist of the principal conveyance channels, detention or retention basins and outflow channels leading to the principal receiving water course.

Note: This manual will be updated or modified from time-to-time as the County deems necessary.

SECTION 2.2. PRIMARY DRAINAGE SYSTEM

The selection of detention/retention basin for the purposes of peak flow attenuation will depend on the hydrologic soil group and site specific conditions of the soils in the area to be developed or redeveloped.

The purpose of detention/retention ponds is to serve as a buffer to attenuate peak flows and/or excess runoff volume from urbanized area. In addition to attenuation, it provides treatment of the first flush, which will cover the water quality aspect of stormwater runoff. In general, water quality designs should be based on the minimum performance standard described in Chapter 65-25 FAC, SWFWMD 40D-4, 40D-40 and the Manatee County Comprehensive plan.

In general, retention refers to stormwater storage without access to a positive outlet, while detention facilitates offer temporary storage accompanied by controlled release of the stored water. Wet detention has a pool of water below the outlet elevation; dry detention is typically placed with the basin bottom above the seasonal high water table. Retention and detention can be used separately or together in storage basins as site conditions and management objectives require.

A key element to proper planning of retention/detention facilities is the selection of potential sites that will provide control of both flooding and stormwater quality. Other important considerations include:

A. Stormwater Management Master Plan.

B. Conveyance of drainage to the site.

C. Suitability of site for water storage.

D. Availability of suitable outlet point.

E. Adjacent land use.

F. Roadway control elevation.

G. Soil infiltration capability.

H. Water table fluctuations.

I. Outfall high water elevation.

J. Type of facilities proposed.

K. Safety and maintenance requirements.

L. Other regulatory agencies requirements.

For the design of detention ponds the instantaneous peak discharge expected for the undeveloped site due to 25 year rainfall shall not be exceeded by the instantaneous peak discharge from the developed site due to a 25 year rainfall. Calculation of instantaneous peak discharge from the undeveloped site shall consider the effect of existing storage in attenuating this peak. Off-site runoff must be routed around or through the project without combining with on-site runoff unless the pond and discharge structure are designed to accept this off site runoff.

SECTION 2.3. HYDROLOGY

2.3.1. DESIGN STORM

In most cases, the primary drainage system (detention or retention basins principal conveyance channels of an area to be developed or redeveloped) shall be designed so as to control the runoff from a 25 year - 24 hour Duration Design Rainfall (DDR) as determined from Appendix B-4 without causing flooding of the area. The actual design storm required will be dependent on existing outfall conditions. To provide consistency in the parameters

used by the County staff in their review process, the soil conservation service (SCS) Type II modified rainfall distribution is recommended and will be used. (See appendix A-1)

The 25 year - 24 hour DDR will be applicable where either a more than adequate or an adequate outfall condition exists.

In areas of known drainage problems, a peak sensitive outfall condition shall prevail and require a reduction of up to 50% of the allowable pre-development flow from the 25 year - 24 hour DDR or that adequate off-site improvements be installed to provide for an adequate outfall condition.

Where no positive outfall exists, alternate solutions shall be required. These solutions include:

A. Capacity for retention of the 100 year 24 hour duration design rainfall, with one foot of freeboard, and

B. The upgrading of downstream facilities to provide positive outfall.

In areas of direct discharge to coastal waters or those with proven tidal influence, the attenuation of stormwater runoff as required may be waived by the County, however, the water quality needs to be addressed prior to direct discharge.

2.3.2. HYDRAULIC REQUIREMENTS.

The discharge rate for a given site shall not exceed the predevelopment discharge rate based on not less than a twenty-five (25) year frequency storm. This requirement may be waived when discharge occurs directly into coastal or tidal waters of the State and where State permits have been obtained; provided that it can be demonstrated that there are no adverse effects.

2.3.3. INTERNAL DRAINAGE.

Internal drainage systems within any site shall be designed, at minimum, for the ten (10) year frequency storm, unless the retention areas are provided according to the specifications of Section C, below.

2.3.4. MAJOR DRAINAGE WAYS.

New major drainage ways receiving stormwater runoff from any site shall be designed to maintain positive outfall from the site for the twenty-five (25) year frequency storm, with one (1) foot of free board mandatory. Specific conditions may require more restrictive discharges. This will be determined by the Department Director in accordance with this Manual. New major drainage ways shall not appreciably drawdown the surficial aquifer; or impact wetlands in contravention of Chapter 40D-4, or 62-330 and 62-340, Florida Administrative Code.

2.3.5. RETENTION AREAS.

Retention areas with outlets shall be designed for a twenty-five (25) year frequency storm or as required otherwise in this Manual. Retention areas with no outlets shall be designed for a one hundred (100) year frequency storm. A retention/detention basin shall not be excavated to a depth which causes the direct exposure of the Floridian aquifer to stormwater retained/detained in any such basin. A retention/detention excavation shall not breach an aquiclude; or adversely affect the adjacent wetlands.

2.3.6. STREETS.

New streets shall be designed with traffic lanes a minimum of six (6) inches freeboard above the design storm base flood elevation measured to the crown of the road. New bridges and culverts shall be designed to convey the design storm without any adverse impacts such as increased flooding, flow, velocity or erosion. The design storm for new streets shall have a twenty-four (24) hour duration and return frequencies as follows:

A. For all streets, bridges and culverts within the published FEMA 100 Year Floodplain, the design storm shall be one hundred (100) year return frequency.

B. For streets, bridges and culverts of arterial and collector facilities not in the published 100 Year Floodplain, the design storm shall be fifty (50) year return frequency.

C. For local streets, bridges and culverts not in the published one hundred (100) year floodplain, the design storm shall be twenty-five (25) year frequency.

D. The design storm for internal street drainage systems shall be as required by Section 2.3.3 of this Manual; however, internal roadway lane elevations shall be designed for the twenty-five (25) year return frequency design storm.

2.3.7. HYDROGRAPH COMPUTATION

Design flood hydrographs (pre-development hydrographs or post- development inflow hydrographs to detention or retention basins) resulting from the 25 year - 24 hour DDR may be computed by the TR-20 Model and TR-55 (SCS's unit hydrograph model); the HEC-1 Model (Corps or Engineer's unit hydrograph model); or, for basins 10 acres or less, by the Rational Method, or other equivalent and widely accepted method; however, the flow rates should be compatible with the flow rates computed through software available to the County staff.

2.3.8. TIME OF CONCENTRATION

The time of concentration is the longest travel time it takes a particle of water to reach a discharge point in a watershed. There are three common ways that waters are transported:

A. Overland flow.

B. Pipe flow (storm sewer).

C. Channel flow, including gutter flow.

The velocity method is a segmental approach that can be used to account for each of these types of flow by considering the average velocity for each flow segment being evaluated, and by calculating a travel time using the equation

$$t_i = \frac{L_i}{60(V_i)}$$

Where:

t_i = Travel Time for velocity segment i, (min)

L_i = Length of the flow path for segment i, (Ft)

V_i = Average velocity for segment i, (Ft/sec)

The time of concentration is then calculated expressed as

$$T_C = t_1 + t_2 + t_3 + \ldots . t_i$$

Where:

T_C = time of concentration, (Minutes)

t_1 = overland flow travel time (Minutes)

t_2 = channel flow travel time (Gutter Flow) Min.

t_3 = pipe flow time (storm sewer) Min.

t_i = travel time for the ith segment (Min.)

An alternative procedure for evaluating overland flow travel time involves the use of figures in appendices A-2 and A-3 to obtain an estimate of the average velocity for overland flow and consequently calculating the travel time.

Time of concentration[1] can also be obtained from the following methods:

A. Kinematic Wave Equation. The Kinematic Wave Equation (RAGAN, 1971; Flemming 1975) can be used to estimate time of concentration when there exist a Kinematic wave (velocity not changing with distance but changing @ a point). The time of concentration equation for these conditions is.

$$T_C = \frac{0.93[L^{0.6}N^{0.6}]}{I^{0.4}S^{0.3}}$$

Where:

T_C = time of concentration, (Min.)

L = overland flow length (Ft.)

N = mannings roughness co-efficient for overland flow

I = rainflow intensity (In/Hr)

S = average slope of overland flow path Ft/Ft

Following overland flow manning's N values should be used with the above Kinematic wave eq.

Table 1: Overland Flow Manning's N Values

	Recommended Value	Range of Values
Concrete	0.011	0.01-0.013
Asphalt	0.012	0.01-0.015
Bare Sand	0.010	0.010-0.016
Graveled surface	0.012	0.012-0.030
Bare clay-loam (eroded)	0.012	0.012-0.033
Fallow (no residue)	0.05	0.006-0.16
Plow	0.06	0.02-0.10
Range (natural)	0.13	0.01-0.32
Range (clipped)	0.08	0.02-0.24
Grass (bluegrass sod)	0.45	0.39-0.63
Short grass prairie	0.15	0.10-0.20
Dense grass	0.24	0.17-0.30
Bermuda grass	0.41	0.30-0.48
Woods	0.45	-- --

Note: These values were determined specifically for overland flow conditions and are not appropriate for conventional open channel flow calculations.

[1] Other accepted and widely used methods are allowed for computation of the time to concentration.

Values are from Engman (1983), with additions from the Florida Department of Transportation Drainage Manual (1986).

Kinematic wave equation generally involves a cumbersome trial and error process using the following steps:

1. Assume a trial value of rainfall intensity (i).
2. Find the overland travel time (T_C) using the above equation.
3. Find the actual rainfall intensity for a storm duration of T_C from the appropriate intensity duration frequency (IDF) curve for zone 6. Also record the intensity for T_C.
4. Compare rainfall intensities, if they are not the same, select a new trial rainfall intensity and repeat step 1.

An alternative to the above equation is the nomograph presented in Appendix A-4.

B. Soil Conservation Service. The soil conservation service (SCS) (USDA, 1975 or updated version) related the time of concentration to the watershed lag time as follow:

$$T_C = 1.67t_1$$

Where:

t_1 = watershed lag time in hours (from the center of mass of rainfall excess to the time peak runoff) and:

$$t_1 = \frac{L^{0.8}(S+1)^{0.7}}{1900y^{0.5}}$$

L = watershed hydraulic length (Ft.)

S = Potential watershed storage (In.)

y = Average watershed slope (Percentage)

To aid in calculating overland flow velocities, the Soil Conservation Service nomograph (SCS 1975) is inserted in Appendix A-3. This alternate SCS method requires an estimate of overland slope and a description of the cover crop or land use. Thus, some engineering judgment must be exercised. Generally, estimates are made for each relatively constant slope and ditches should be divided into smaller homogeneous areas with regard to slope and cover type.

C. Manning's Equation. In storm sewer, gutter and open channels, manning's equation (CHOW, 1959) to calculate average velocities could be used.

$$V = \frac{1.48}{n}R^{2/3}S^{1/2}$$

Where:

V = Velocity (Ft/Sec)

R = Hydraulic Radius, Ft = D/4 for pipe flowing full

S = Slope Ft/Ft

N = Roughness Coefficient

2.3.9. SCS TR-55 METHOD

The SCS has developed an empirical relationship for estimating rainfall excess that accounts for infiltration losses and initial abstraction by using a site-specific runoff parameter called the curve number (CN). The watershed CN is a dimensionless coefficient that reflects watershed cover conditions, Hydrologic Soil group, Land uses and antecedent moisture conditions. In all cases, Manatee County selects only antecedent moisture condition II for design purposes.

A composite curve number (CN) for a watershed having more than one land use, treatment, or soil type can be found by weighting each curve number according to its area. A table showing the runoff curve number is present in appendices A-9 and A-10.

The maximum soil storage and a CN value for a watershed can be related by the following expression

$$S = \frac{1000}{CN} - 10$$

Where:

S	=	Maximum soil storage, in inches
CN	=	Watershed curve number, dimensionless

When the maximum soil storage is known, the rainfall excess can be calculated using the following SCS Relationship

$$R = \frac{(P - I_a)^2}{(P - I_a) + S}$$

Where:

R	=	Accumulated rainfall excess (or runoff) in inches
P	=	Accumulated rainfall, in inches
S	=	Maximum soil storage, in inches
I_a	=	Initial abstraction including surface storage interception, & infiltration prior to runoff (inches)

The relationship between $I_a$and S was developed from experimental watershed data. The empirical relationship used in the SCS runoff equation is:

$$I_a = 0.2\,S$$

Substituting $0.2\,S$ for $I_a$in the runoff equation, above, yields:

$$R = \frac{(P - 0.2\,S)^2}{(P + 0.8\,S)}$$

or directly connected impervious areas, and initial abstraction (I_a) of equal to $0.05\,S$ will be allowed.

Additional information on the SCS relationship can be found in USDA Technical Release No. 55 publication.

2.3.10. RATIONAL METHOD

According to the Rational Method, the peak runoff rate can be estimated as the product of a runoff coefficient, a rainfall intensity, and the drainage area. The Rational Method is expressed mathematically as:

$$Q = CIA$$

Where:

Q	=	Peak runoff rate in $Ft^3/_{sec}$
C	=	Rational Method runoff coefficient, dimensionless
I	=	Average rainfall intensity for the design, inches/hour
A	=	Watershed drainage area in acres (Basins must be 10 acres or less to use Rational Method for its hydrograph computation)

Assumption:

1. The time of concentration of the drainage basin refers to the travel time required for the runoff to flow along the representative basin flow, which is typically defined to be from the most hydraulically remote point of the design. Overland flow, storm sewer or gutter flow, and channel flow are commonly used in computing travel time.
2. The storm duration equals the time of concentration of the basin.

Rational coefficients should be estimated by using the values in Appendix A-12 for the two to ten (2-10) year design frequency storm. For the 25-100 year frequency storm a correction factor shown in Appendix A-8 is to be applied to the previous areas unless flood routing computations are appropriate for the basin. When using these tables one should consider the following conditions:

1. Land use
2. surface types and percentages
3. soil type
4. slope

For basins with varying cover, a weighted rational coefficient can be determined for the basin by the following equation:

$$Weighted\ C = \frac{C_i A_i}{A_i}$$

Where:

C_i	=	Rational coefficient for A_i(dimensionless)
A_i	=	Portion of the basin with a relatively uniform land cover, soil type, and slope, in acres.

Rainfall intensity, (I) is the average rate of rainfall in inches per hour. Critical storm duration equals the time of concentration of the drainage basin for Rational Method. Refer to Appendix B for storm frequency and rainfall intensity curve for this area (Zone 6).

2.3.11. ROUTING CALCULATION

To develop an estimate of the storage volume required to meet allowable discharge requirements, following need to be calculated:

A. Inflow Hydrograph for 25 year storm

B. Stage storage data for proposed retention/detention

C. Allowable peak outflow rate, which should not exceed the existing condition flow rate.

D. Perform filtration, and ex-filtration calculations to comply with appropriate stormwater treatment regulations.

E. Evaluate the downstream effects of detention outflow, as necessary determined by staff, to ensure that the outflow hydrograph does not cause downstream flooding problems.

An acceptable and widely used (state and federal agencies) computer procedure is useful for conducting final routing computations (i.e.: HEC-1, ICPR, . . .). County will also accept analysis based on the following method:

Storage indication method or modified plus

A flood wave passing through a storage reservoir is both delayed and attenuated as it enters and spreads over the pool surface. Water stored in the reservoir is gradually released through outlet control structure.

$$I - O = \frac{ds}{dt}$$

Where:

I	=	Inflow C.F.S.
O	=	Outflow C.F.S.
$\frac{ds}{dt}$	=	Rate of change of storage within the reach

2.3.12. FILTRATION AND UNDERDRAIN CALCULATION

In cases where soil and groundwater flow conditions will not permit recovery of the stormwater treatment volume within the regulated duration, stormwater filtration system may be required. The minimum of 6" underdrain pipe is to be used. A filter fabric envelope shall be used with underdrains and shall be an approved strong, porous nylon, polyester, polypropylene or other fabric approved by the County, which completely covers the underdrain surface in such a way to prevent infiltration of surrounding material. A drawdown worksheet for underdrain calculation is present in Appendix "C" which may be utilized for draw down calculations. Clean outs are to be spaced no greater than every 250 feet and at the ends of the underdrain pipes.

2.3.13. OUTLET CONTROL STRUCTURES

Outlet controls selected for retention/detention facilities should accomplish the necessary functions of the facility. Outlet control can take the form of drop inlets with pipes, weirs, filtration underdrain piping, and orifices. The sizing of a particular outlet control should be based on results of hydrologic routing calculations, and as appropriate subsurface filtration calculations. All control structures shall be designed to prohibit the entrance of floating debris into the structure. The bottom of the skimming device should be at least 2-6” below the weir elevation, and the top no lower than the design high-water elevation. The top of the control structure should be at the elevation of the design high water.

2.3.14. WEIR FLOW CALCULATIONS

A. Free discharge. The equation in computing discharge over a rectangular sharp-crested weir is:

$$Q = CLH^{1.5}$$

Where:

Q = discharge, C.F.S

C = Weir coefficient

L = Weir length, Ft.

H = Head on weir, Ft.

Detailed information for determining specific values of the weir coefficient for various weir configurations is presented by Brater and King (1976).

B. Submerged discharge

When tailwater rises above the weir crest elevation the actual discharge over the weir is inhibited by the backwater conditions. The above calculated "Free" discharge value is multiplied by the following reduction factor to account for the submerged effect:

$$Q_s = Q_f \left(1 - \left[{}^{H_2}/_{H_1}\right]^{1.5}\right)^{0.385}$$

Where:

Q_s = Submerged flow, CFS

Q_f = Free flow, CFS

H_1 = Upstream head above crest (feet)

H_2 = Downstream head above crest (feet)

(1) V Notch Flow. The discharge through a V notch sharp crested weir is given by

$$Q = CH^{5/2}\, tan(O/2)$$

Where:

O = Notch angle, degree

H = Measured head, ft

C = Coefficient of discharge

The head H is measured from the notch elevation to the water surface elevation. The water surface should be measured at least 2.5 H upstream from weir, to be beyond the drop in the water surface near the weir. Values of C, Coefficient of discharge can be taken from nomograph in appendix A-11.

(2) Orifice Flow. When stages exceed the crest elevation of the weir, discharges though the bleeder notch should be calculated using the orifice equation.

$$Q = 4.8AH^{1/2}$$

Where:

Q = Flow, CFS

A = Area of the notch, Sq. Ft.

H = Head above notch centroid, ft.

2.3.15. DETENTION BASINS

Detention basins may be of either the shallow dry type or may be artificial lakes specifically constructed for the purposes of flow attenuation.

Proposed detention basins and their outlet pipe control structures shall be analyzed by the computation of inflow hydrographs to the detention basins resulting from the applicable Design Rainfall on the contributory area to each basin. The determination of the resulting water level in the basins and outflow hydrograph peaks from these basins shall be determined by flood routing.

Hydraulically, outlet structures shall be weir/orifice controlled. Flashboard risers are not acceptable.

The seasonal high groundwater elevation shall be estimated from existing soil conditions and profiles, and existing water level for the location(s) proposed to be utilized as detention ponds. No storage credit will be given below the seasonal high water table elevation (or adjusted S.A.W. elevation). The outlet of detention ponds shall have a water level control structure that enables the pond to function as indicated in the hydraulic calculations. All detentions requirement shall comply with State of Florida regulations. (FAC 65-25; FAC 40D-4; FAC 40D-40; Chapters 120 and 373 F.S.).

2.3.16. RETENTION BASINS

Retention basins constructed for flow attenuation purposes must have sufficient volume to contain the volume of post development runoff from the design storm rainfall, or shall have sufficient volume to contain said runoff volume with a minimum of one (1) foot of freeboard. Exfiltration out of the basin shall not be considered in determining this theoretical basin size.

The storage volume in any retention basin occupied by runoff from the design rainfall shall again be available within a 36-hour period after the design rainfall ceases; stormwater stored in these basins shall be removed in this 36-hour period by infiltration or underdrain drawdown. If infiltration (percolation) rates are used, in excess of the SCS soil book for Manatee County, in the design of retention basins, the rate shall be determined by the performance of double ring infiltrometer test (ASTM standard method D3385-75), which shall be performed at the proposed bottom of the retention basins by a qualified soil engineer or scientist.

It is desirable for the bottom of any retention basin to be a minimum of two (2) feet above the estimated seasonal high water table (SHWT) when percolation is the primary outlet of retention. If the above specified clearance cannot be met the site engineer must demonstrate by calculations that the retention ponds will function according to County criteria and the intended design. These calculations must take into consideration the effects of groundwater mounding on percolation both during the rainfall event and in the recovery of the design storage volume. However, a minimum of one (1) foot of clearance is required from the seasonal high groundwater table to the proposed pond bottom.

The seasonal high groundwater table shall be determined or estimated by a qualified soil engineer or scientist (or use the SCS book for Manatee County).

A suitable emergency overflow outlet and path shall be provided for retention ponds. This flow path shall conduct overflow away from the area without minimizing flooding of adjacent property, either public or private.

2.3.17. DETENTION AND RETENTION SYSTEM DESIGN CRITERIA

A. Dry type systems. Dry, shallow type detention or retention system shall be required to meet the following design standards:

(1) These systems shall maintain dry conditions except for a 36 hour period following the design storm rainfall. There should be a minimum of a one (1) foot clearance between the seasonal high water table (SHWT) to the bottom of the pond;

(2) These areas shall have a food stand of grass or other acceptable coverage;

(3) The maximum allowable side slope is that of 4:1 (4 feet horizontally for every 1 foot vertical);

(4) Inlets to these systems shall be provided, for controlling erosion. This may be done by incorporating miteredends, flumes with riprap, or other accepted methods;

(5) Adequate clearance shall be provided between these systems and the adjacent property; and

(6) A minimum of one (1) foot of freeboard for systems within subdivision and six (6) inches of freeboard for all other systems shall be required unless the 100 Year - 24 Hour Storm Design is required. In those cases, a minimum of one (1) foot of freeboard shall be required on all developments. (100 Year 24 Hour Storm Design).

B. Artificial lake systems. All systems which intend to incorporate wet detention facilities shall be required to meet the following standards:

(1) There shall be a minimum depth of six (6) feet over at least 5% or a minimum of 500 ft., or whichever is larger, of the lake. This will allow for the required littoral zones needed for mitigation or water quality treatment;

(2) The maximum allowable side slope is that of 4:1 (4 feet horizontally for every 1 foot vertical), and is to be maintained for a minimum of three (3) feet vertically below the normal water level;

(3) All side slopes, as well as a two feet band around the entire perimeter of the top of bank shall be sodded;

(4) Provide adequate clearance between the top of bank and adjacent property to provide for a minimum of a 4:1 side slope from the top of bank to the existing ground elevation and a property line swale, when necessary; and

(5) A minimum of one (1) foot of freeboard will be required, regardless of the design storm or the type of development.

2.3.18. WATER QUALITY TREATMENT DESIGN

The design requirements for water quality treatment shall, in general, be reviewed under SWFWMD criteria. However, Manatee County has criteria which exceed those required by SWFWMD, which sets the minimum size of underdrain to be of a six (6) inch diameter.

2.3.19. GENERAL STORMWATER MANAGEMENT DESIGN CRITERIA

For all developments, property line swales shall be required and shall conform to, at a minimum, Manatee County Standards. If the development is occurring within an approved subdivision, the perimeter and property line swales shall conform to that approved per the typical lot grading plan. Should no typical lot grading plan be available, then the grading for the swales shall meet Manatee County Standards for property line swales.

Developments occurring within existing subdivisions where no Master Drainage System exists shall be required to provide their own stormwater management systems.

Detailed information regarding the area of influence shall be provided when drawing down the SHWT or where filling of the site under development may influence the existing groundwater table on adjacent properties.

Easements shall be provided for all property line swales. The site engineer shall field investigate drainage patterns immediately upstream and within at least 1,000 feet downstream of the site. It shall be demonstrated that design tailwater conditions are appropriate and there are no downstream restrictions to conveyance which may necessitate the use of peak sensitive outfall criteria.

2.3.20. OFFSITE DRAINAGE

Offsite surface waters which flow across or to a site proposed for development must be accommodated in the stormwater management plans for the development. The stormwater management system for the development must be capable of transporting existing offsite flows through or around the site development. The estimation of the offsite flows must be calculated separately from the estimation on-site post-development flows (i.e., separate offsite and on-site hydrographs must be computed due to the typically significant differences in land use characteristics).

2.3.21. ENVIRONMENTAL REQUIREMENTS

Water quality standards as established by the State of Florida (FAC 17-25), the Southwest Florida Water Management District, and the Manatee County Comprehensive Plan shall be required by Manatee County. The latest standards or revisions of these agencies shall be adhered to in the design, construction, operation and maintenance of stormwater Management facilities in Manatee County, Florida.

Water quality treatment shall be reviewed jointly between the Manatee County Public Works and Pollution Control Departments.

An additional 50% treatment or volume is required by the Manatee County Comprehensive Plan within the County's watersheds (Evers Reservoir and Lake Manatee Watersheds). Otherwise, the treatment volumes shall be equal to those required by the State of Florida and/or SWFWMD, whichever is more restrictive.

SECTION 2.4. INTERNAL DRAINAGE SYSTEM DESIGN

2.4.1. GENERAL

The type of interior drainage system of an area to be developed or redeveloped will depend on its typical roadway cross section. Where the proposed roadway system is to have curbs and gutters, the interior drainage system shall consist of storm sewers with sufficient drop inlets to insure runoff entry thereto (closed system).

Where no curb and gutter is proposed, the collection system shall consist of shallow grassed swales on both sides of the roadway (open system).

Public roadway drainage conveyed from the roadway between side or near lot lines shall be piped.

2.4.2. MINIMUM GROUNDWATER AND HIGH-WATER CLEARANCES

All roadways shall be designed to provide a minimum of one (1) foot between the bottom of the base course of the roadway and the seasonal high groundwater table. Roadside underdrains may be used in lieu of meeting this standard, provided that the underdrains will result in the seasonal high water table under the roadway being lowered to the above cited level.

In all situations, the crown of proposed roadways shall be no lower than 18 inches below the elevation of the adjacent ground after development.

2.4.3. HYDROLOGY

The interior drainage systems of an area are to be developed or redeveloped shall be designed to carry runoff from a 10 Year Frequency Rainfall. Drainage systems from improvements to or for roadways which are designated part of the Major Thoroughfare Plan shall be designed for the 25 Year Frequency event.

In all cases, the interior drainage system of developments shall be laid out so that if a more intense rainfall (greater than 10 Year Frequency event) overtaxes the system, an unobstructed flow path to lower ground will be provided. The purpose of this path shall be to ensure that no damage to properties located in the lower areas of development will occur and that no extensive ponding of water results.

2.4.4. AREAS DRAINED BY CLOSED SYSTEMS

Storm sewer systems shall be designed to flow full, but not under pressure at the computed peak design discharge.

In all cases, a self-cleaning system will be designed utilizing drop inlets. Longitudinal connecting pipes will run from inlet to inlet. No manholes shall be utilized unless absolutely necessary. Where possible, to insure self-cleansing, pipes will be placed on a minimum grade of 0.2 percent and provide a minimum velocity of 2.5 feet per second when flowing full or half-full. Minimum pipe sizes for closed systems shall be as follows:

1. For longitudinal pipes – 15 inches
2. For runs 75-feet or less – 15 inches
3. For low points on roadways (Bucket) – 18 inches

A. Inlet spacing. Pavement inlets shall be so spaced as to limit the spread of water from a 10 Year Frequency Rainfall to five-feet measured longitudinally on a continuous grade. Spacing shall be based on a maximum of 400 feet gutter flow. If slopes exceed 2% at low points, two pavement inlets on each side of the roadway shall be provided if deemed necessary by hydraulic analysis. Special care shall be taken in the placing of inlets so as to prevent water from flowing across the pavement. For purposes of maintenance, a spacing of 400 feet between junction boxes shall be required.

Headwalls and/or erosion protection devices (i.e., riprap, mitered ends) shall be installed at the ends (outlet pipes) of all closed systems to reduce erosion in the receiving water course.

B. Tailwater Effect. The effect of tailwater level in the receiving water shall be fully considered in the design of all storm sewer systems, such that when the outlet of the storm sewer system is below the tailwater level in the receiving water, the hydraulic grade line for the proposed storm sewer system shall be computed.

In all cases, the computed Hydraulic grade line elevation shall not be higher than 0.25 feet below the gutter line elevation at any drainage structure.

Where the receiving stormwater facility is a detention basin, the design tailwater level can be computed by routing a hydrograph resulting from a 10 Year Frequency storm of a duration equal to that used in designing the pond through the basin.

In the computation of the hydraulic grade line, all energy losses (entrance, exit, friction, structure, etc.) must be considered.

2.4.5. AREAS DRAINED BY OPEN SYSTEMS (INTERIOR SYSTEM)

Swale drainage systems shall be designed as open channels in a manner similar to the closed system.

The minimum slope of swales adjacent to roadways and other swales constituting the interior drainage system shall be to FDOT and Green Book Standards. The maximum velocity of flow in swales shall be as follows (upon project completion):

A. Seeded and mulched – 0 to 2-feet per second

B. Sodded (no staking) – 2 to 4-feet per second

C. Paved – 4-feet per second or greater

D. Existing ground cover:

(1) Good condition – 0 to 4-feet per second

(2) Fair condition – 0 to 2.5-feet per second

(3) Poor condition – 0 to 1.5-feet per second

Flow in roadway swales shall be routed to culverts carrying the primary drainage system through the area to be developed or to flow channels (swales) in dedicated public easements between lots which will convey runoff to the primary drainage system.

The hydraulic engineering circular no. 5, hydraulic charts for the selection of highway culverts, published by the U.S. Department of Transportation, Federal Highway Administration should be used for all culvert design under the roadway.

2.4.6. LOT DRAINAGE SPECIFICATIONS.

See Appendix D for graphic lot drainage details.

A. For closed drainage, show curbs, gutters and sidewalks, if applicable.

B. Existing drainage shall be maintained or improved.

C. Minimum driveway rise from curb to garage is 1%.

D. Show all easements.

E. Minimum grade slopes are as follows:

(1) Front Yard - 2.0%;

(2) Rear and Side yards - 1.5%;

(3) Swales - 1.0%.

F. Minor modifications to accommodate special conditions such as trees may be approved by the Public Works Department.

G. Lots with special conditions may have slopes based on an engineer's detailed design approved by the Department Director or designee.

H. Deviations due to existing trees, vegetation or other extenuating circumstances may be approved. Difficulties arising from such deviations are the responsibility of the property owner to satisfactory resolve.

I. Lot slopes apply to a 75' radius from the edge of the house. The intent is to allow flexibility on larger lots.

J. All conflicts shall be remedied to the satisfaction of the Public Works Department Director.

K. Permitee shall submit a copy of the approved subdivision drainage plan. Size requirements are 8-1/2"x11", 8-1/2"x14" or 11"x17" at a scale of 1"=100' or 1"=200' for lots of 5 acres or more.

2.4.7. ACCEPTABLE STORM SEWER PIPES

The following are acceptable materials for the construction of storm sewer systems which must meet County standards:

A. Storm sewer running across a public roadway - RCP or structural plate only

B. Storm sewer running parallel to a public roadway and between lots - RCP, Polyethylene, corrugated metal

Corrugated metal pipe is not permitted under any roadway. Metal pipe will only be allowed if surrounding soils are of proper PH ranges conducive to metal pipe

2.4.8. EROSION AND SEDIMENT CONTROL

Erosion and sediment control must be submitted with the construction or immediately following (same day) of any land disturbing activities. In no case shall silt or debris be allowed to enter a public right of way in such a manner as to create a traffic hazard, a public nuisance or a threat to exiting drainage.

In accordance with best engineering practices, erosion and sediment control measures must be provided on all sites to be developed or redeveloped where existing vegetation or impervious surfaces shall be removed so that bare soil remains. These measures shall be provided not only in areas of the proposed stormwater system (i.e., inlets, ponds, outfalls, etc.), but in all areas disturbed. This includes providing silt screens or hay bales along property lines where the existing ground cover has been removed.

Erosion and sediment controls must be in place prior to construction or immediately following (same day) of any land disturbing activities.

Plans for erosion and sediment control must be submitted with the construction plan submittal and be approved prior commencement of any work on site. The following items included in the erosion and sediment control plans:

A. A description of the siltation control program and siltation control practices.

B. Details of erosion and sediment controls.

C. A plan for temporary and permanent vegetative and structural erosion and siltation control measures.

D. A description of the maintenance program for siltation control facilities including inspection programs, re-vegetation of exposed soils, method and frequency of removal and disposal of solid waste material from control facilities and disposition of temporary structural measures.

2.4.9. PROTECTION AND STABILIZATION OF SOIL STOCKPILES

Soil stockpiles shall be protected at all times by on-site drainage controls which prevent erosion of the stockpiled material. Control of dust from such stockpiles shall be required.

In no case shall any unstabilized stockpile remain in place, longer than thirty (30) calendar days.

Stockpiling of material may not occur unless a minimum of thirty (30) feet of clearance between to the toe of slope of the stockpile and the adjacent property is available.

2.4.10. OWNERSHIP AND MAINTENANCE

All erosion control devices shall be checked regularly. Devices shall be cleaned or repaired as required.

Maintenance of all soil erosion and siltation control devices, whether temporary or permanent, shall be at all times the responsibility of the Owner.

A. Lakes and Ponds. When lakes and ponds are incorporated within a subdivision as part of the stormwater management system, the maintenance responsibility shall be provided in either individual or common

ownership; or easement stipulating same. Further, a drainage easement for such lakes or ponds shall be granted to the County along with access easements as required in Section 2.4.9.F, below, and the owner shall be held legally responsible for the continued maintenance and operation of the stormwater management system. Such owner shall have an address of record, and shall represent the interest of all property owners for which the stormwater system has been designed.

B. Streets and Other Common Areas. Stormwater management facilities shall be incorporated into rights-of-way, easements, open space areas, retention/detention areas and similar common facilities.

C. Private Ownership. Swales and other drainage facilities not in common areas shall be maintained in private ownership, with appropriate public drainage easements granted to the County.

D. Common Ownership. Stormwater management systems in private streets and other common areas shall be provided for in common ownership with all lot owners within the development.

E. Major Drainage Facilities. All major drainage facilities servicing any site shall be dedicated to the County together with necessary access easements to said drainage ways.

F. Easement Requirements. All required easements shall be provided as specified in the Land Development Code and the Public Works Standards Manual. All access easements shall be on level ground at the top of the bank and shall be designed and maintained sufficiently free and clear of vegetation or other obstruction for vehicular access to permit inspection and maintenance operations, except that clearing shall not be required for access easements to existing major drainage facilities.

G. Off-Site Stormwater Management Facilities. An off-site stormwater management facility may be considered if a developer can demonstrate that the off-site facility is designed to accommodate the discharge from the development at a twenty-five (25) year frequency storm and that the stormwater management requirements of this Manual and the Land Development Code can be fully achieved for such discharge prior to the discharge entering waters of the State. When an off-site stormwater management facility is proposed, the applicant shall submit for approval a plan indicating the entire contributory area for the off-site facility and written engineering data substantiating the conveyance to the off-site location. Such off-site facilities shall be subject to the approval of the Department Director. Such facilities may only be utilized, however, where adequate ownership and maintenance methods can be shown to provide for their continued functioning. If the developer elects to use an off-site stormwater management facility developed by the County, the developer shall be required to pay a pro-rata cost of the design and construction of said facility based on the quantity of stormwater discharging into the retention/detention facility. All costs associated with upgrading, improving the conveyance system and drainage channels and/or constructing new conveyance systems from the subject development to the off-site retention/detention system shall be borne by the developer.

H. Construction Inspections and Approvals. All work required under this Section, in accordance with the approved construction plans, shall be subject to the approval of the Department Director and shall serve as a prerequisite for any subsequent permit required at the site or for occupancy thereof.

I. Violations. Any development or activity that proceeds in violation of this Section shall be subject to the violations provisions of the Land Development Code. Restoration of land to pre-existing drainage conditions or other corrective actions shall be required where a violation is determined to have occurred.

2.4.11. RIGHTS OF WAY, EASEMENT, AND MAINTENANCE ACCESS REQUIREMENTS

Open drainage channels and piped systems shall have unobstructed maintenance access areas as shown on the drawings in Appendix A. Detention and retention basins shall have an unobstructed access route at least 20-feet

wide from the nearest street and shall have an unobstructed maintenance access area a minimum of 20-feet from the top of bank completely around their perimeter.

All rights of way, easements, and maintenance access areas shall be sodded, or have a good stand of grass or other acceptable coverage per County approval. In all cases there shall be a minimum of 2 foot strip of sod placed at the edge of pavement or back of curbs.

2.4.12. SWALES

Swales shall be constructed along side and rear lot lines sloped toward and discharging into a retention/ detention basin or into an acceptable drainage facility, drainage outfall, or drainage system, approved by the Department Director in accordance with the standards contained in this Manual and the Manatee County Highway and Traffic Standards Manual.

SECTION 2.5. SUBMITTAL REQUIREMENTS FOR STORMWATER MANAGEMENT SYSTEMS

2.5.1. STORMWATER MANAGEMENT PLAN PREPARATION

The criteria below shall be used as minimum design elements of a Stormwater Plan. For projects using the criteria below, a copy of the approved Environmental Resource Permit including the site plans and technical supporting data from applicable State Water Management agencies shall be provided prior to approval by the Manatee County Stormwater Management Division of the Public Works Department. The criteria below shall only be used for approval of a single submittal to Manatee County on a particular piece of land. The criteria below shall not be used on land or lots located within a master drainage system or a subdivision in which each lot is required to provide dedicated stormwater facilities. The criteria below shall not be used for more than one administrative approval on a single piece of property unless otherwise approved by Manatee Stormwater Management or Public Works staff. Regardless of the criteria below, stormwater runoff shall discharge to the historical point(s) of discharge. Drainage runoff which flows from offsite areas shall be conveyed through or bypassed around the development. The criteria below are based upon General Permit for Minor Activities. Section 40D-400.475, 1d. F.A.C., and subject to conformity with any amendments made on this section. The criteria are applicable to all existing platted lots or platted lots of record prior to 1985 with existing improvements and structures that can be claimed as impervious area:

A. For any project, no additional stormwater facilities will be required for • proposed impervious areas less than or equal to 1.000 square feet. However, floodplain and floodway requirements of Sections 717 and 718 continue to apply if the project lies within the FEMA 1 00-year floodplain or floodway or the 25-year floodplain.

B. For projects with less than 4,000 square feet of impervious vehicular use areas (roadways. driveways. drive aisles. loading areas. etc.) and less than 9,000 square feet of total impervious area: i. Attenuation is not required. ii. Water quality treatment is required.

C. For projects with less than 4.000 square feet of impervious vehicular use areas (roadways, driveways, drive aisles. loading areas. etc.) and less than 9.000 square feet of total impervious area located within a Watershed Overlay Protection District or discharge into an Outstanding Florida Waters:

   (1) Attenuation is not required.

   (2) 150% Water quality treatment is required.

D. For projects with less than 4.000 square feet of impervious vehicular use areas (roadways. driveways. drive aisles. loading areas. etc.) and less than 9,000 square feet of total impervious area located within the 1 00-year floodplain or floodway or the 25-year floodplain:

(1) Attenuation is required and not subject to flow reduction where necessary.

(2) Water quality treatment is required.

(3) Floodplain Compensation is required.

(4) No-rise permit is required where necessary.

E. For projects with over 4.000 square feet of impervious vehicular use areas (roadways. driveways, drive aisles. loading areas. etc.) and/or greater than 9,000 square feet of total impervious area:

(1) Attenuation is required and subject to flow reduction where necessary.

(2) Water quality treatment is required and subject to 150 % requirement where necessary.

(3) Floodplain Compensation is required where necessary.

(4) No-rise permit is required where necessary.

2.5.2. EXISTING HYDROLOGIC CONDITIONS.

The pre-development rate of discharge from the site shall be identified by field review and computation. The location, elevations, seasonal fluctuation regimes, and nature of all existing watercourses, water bodies, and wetlands on or adjacent to the site of the proposed development shall be shown. Seasonal high water table elevations shall be provided specifically for the site and for all proposed pond locations. The tailwater elevation for the twenty-five year design storm shall be calculated or used directly from existing twenty-five-year floodplain maps, flood profiles or from another best existing source of information available, and shall be used in the design of the stormwater management facilities. Twenty-five-year tailwater information is available from the Public Works Department. The downstream conditions, including culvert, ditch and channels sizes, which may restrict capacity of the outfall must be identified.

2.5.3. STORMWATER MANAGEMENT PLAN REQUIREMENTS

All construction plan submittals are to include the following information for the review of the proposed stormwater management systems:

A. Vicinity sketch and legal description.

B. Basin and sub-basin boundaries, including all on-site and offsite areas contributing to the proposed development site. This is to include both pre- and post-development conditions.

C. Final site topography surveyed by a land surveyor at one (1) foot contours based on NAVD1988, as amended, shall be provided for a minimum distance of fifty (50) feet beyond the lot lines, excluding the rights-of-way. Contours may be mapped by an architect, engineer or land surveyor.

D. Signed and sealed boundary survey (by a Florida registered land surveyor).

E. The location, elevation, slope, cross sections, materials and capacity of all prospective stormwater retention or detention facilities, control structures, culverts, lakes, canals, ditches, swales, vegetative buffers, and any other necessary facilities.

F. Proposed elevations, specifically those for the perimeter and property line swales and for finished grades at the property lines. (Minimum elevations are to be provided at the property lines, lot lines and at the

beginning and end of all swales). Typical profiles at property lines which will indicate that stormwater is not being diverted onto adjacent property.

G. Existing drainage features (ditches, ponds, easements, etc.). Existing features are to be shown downstream of the proposed development. The downstream distance shall be determined from the following, whichever is applicable:

(1) The Site Designer shall field investigate drainage patterns immediately upstream and a minimum of 1000 feet downstream of the site and provide documentation of field conditions.

(2) The Site Designer shall demonstrate that design tailwater conditions are appropriate and that there are no downstream restrictions of conveyance which may necessitate the use of Peak Sensitive Outfall conditions.

H. Highwater data upstream and downstream of the proposed development when available.

I. Proposed layout with horizontal and vertical controls.

J. The location, area, permeability, and land cover (existing and proposed) of all proposed drainage basins within the site and the general location, including the area and drainage contribution or surface conditions of all drainage basins related to the project both on and off site, shall be shown. Flow paths, volumes and rates, including those for potential failures or retention/detention facilities shall be indicated throughout the proposed system. In addition, the storage volumes, surface areas, depths, duration, and identification of the final outfall locations and rates shall be indicated.

K. Proposed drainage features, including the location of inlets, swales, ponds, easements, conveyance systems, etc.

L. Notes pertaining to standing water, springs, areas of seepage or sources of highwater data.

M. Specific soils information determined from a geotechnical report or soils analysis. (SHWT data should be included).

N. Soils report indicating infiltration rates, soil type and profile, etc.

O. Flood zone delineation.

P. Existing land uses and ground cover.

Q. Scaled no smaller than 1" = 60'.

R. All necessary computations, hydrographs, and hydraulic analysis prepared by an engineer, which shall include the total project size in acres, acreage by general type of land use, tabulations of the area and percent of impermeable surface by projected type of land use and identification of the frequency and duration of the design storm, including predevelopment and post development runoff rates using an acceptable pond routing procedure or program. Calculations for all of the following must be signed and sealed by the Engineer of Record (Registered in the state of Florida):

(1) Pre- and Post-development times of concentration.

(2) Average Runoff Coefficients or Curve Numbers for both pre- and post-development stormwater facilities.

(3) Volume capacities of existing site storage and post-development stormwater facilities.

(4) Pre- and Post-development flows.

(5) Internal pipe calculations (include basin delineation).

(6) Offsite flow contributions.

(7) Cut and fill calculations for mitigation within the 100 year floodplain.

(8) Stage storage discharge.

a. Computer generated reports (Include all input as well as all output.)

b. Water quality treatment and drawdown calculations.

S. Calculations showing compliance with the stormwater management requirements for the WPE and WPM overlay districts as stated in this Manual and the Land Development Code, if appropriate, with identification of the discharge points from the project, the receiving bodies of water, the conveyance routes thereto and presentation of the method of derivation. The design and construction shall be subject to the regulations under Chapters 62-3, 62-4, 62-25, 40D-4, 40D-45, 40D-400, and other applicable chapters of the Florida Administrative Code.

T. Typical Lot Cross Section.

U. Typical Road Cross sections.

V. Plan and Profiles for all roadways.

W. Jurisdictional Survey.

X. Minimum building elevations.

Y. Location, elevation and detail of all stormwater system components (i.e., swales, inlets, ponds, control structures, etc.).

Z. Erosion and sediment control plans.

AA. Design reference material shall be documented and made available upon request.

BB. Drainage and access easements.

CC. Location and elevations of all utilities.

DD. Construction specifications.

EE. The design shall include the description of the construction and maintenance practices to be used during and after construction which will minimize erosion, siltation of wetlands and watercourses, water pollution, and off-site flooding. All swales shall be either sodded or have an equivalent stand of grass prior to approval.

FF. Such other information as may be required to demonstrate compliance with the requirements of the Land Development Code.

SOURCES

SWFWMD "Management and Storage of Surface Waters – Permit Information Manual; Volume I", March 1988

City of Sarasota, "Engineering Design Criteria Manual", 17 January 1989

Hillsborough County, "Stormwater Management Technical Manual", May 1988

Synder, F.F., "Synthetic Flood Frequency", Paper 1908, Journal of the Hydraulics Division, Proceedings ASCE, October 1958

USDA "Urban Hydrology for Small Watersheds", Technical Release 55 (TR-55), 2nd Edition, June 1986

Briley, Wild & Associates, Inc.

Wright-McLaughlin Engineers (1969)

Hydrology and Water Quantity Control
By: M.P. Wanielista, 1990, Wiley Publication

Introduction to Hydrology, 2nd Edition, 1977
By: W. Viessman, Jr., J.W. Knapp, G.L. Lewis, T.E. Harbaugh

APPENDIX “A”

RAINFALL RATIOS (ACCUMULATED TOTAL 24-HOUR TOTAL)

TIME (HR.)	SCS TYPE II FL. MODIFIED
0.0	.000
0.5	.006
1.0	.012
1.5	.019
2.0	.025
2.5	.032
3.0	.039
3.5	.047
4.0	.054
4.5	.062
5.0	.071
5.5	.080
6.0	.089
6.5	.099
7.0	.110
7.5	.122
8.0	.134
8.5	.148
9.0	.164
9.5	.181
10.0	.201
10.5	.226
11.0	.258
11.5	.308
12.0	.607
12.5	.719
13.0	.757
13.5	.785
14.0	.807
14.5	.826
15.0	.842
15.5	.857
16.0	.870
16.5	.882
17.0	.893
17.5	.904
18.0	.913
18.5	.923
19.0	.931
19.5	.940
20.0	.948
20.5	.955
21.0	.962
21.5	.969
22.0	.976
22.5	.983
23.0	.989
23.5	.995
24.0	1.000

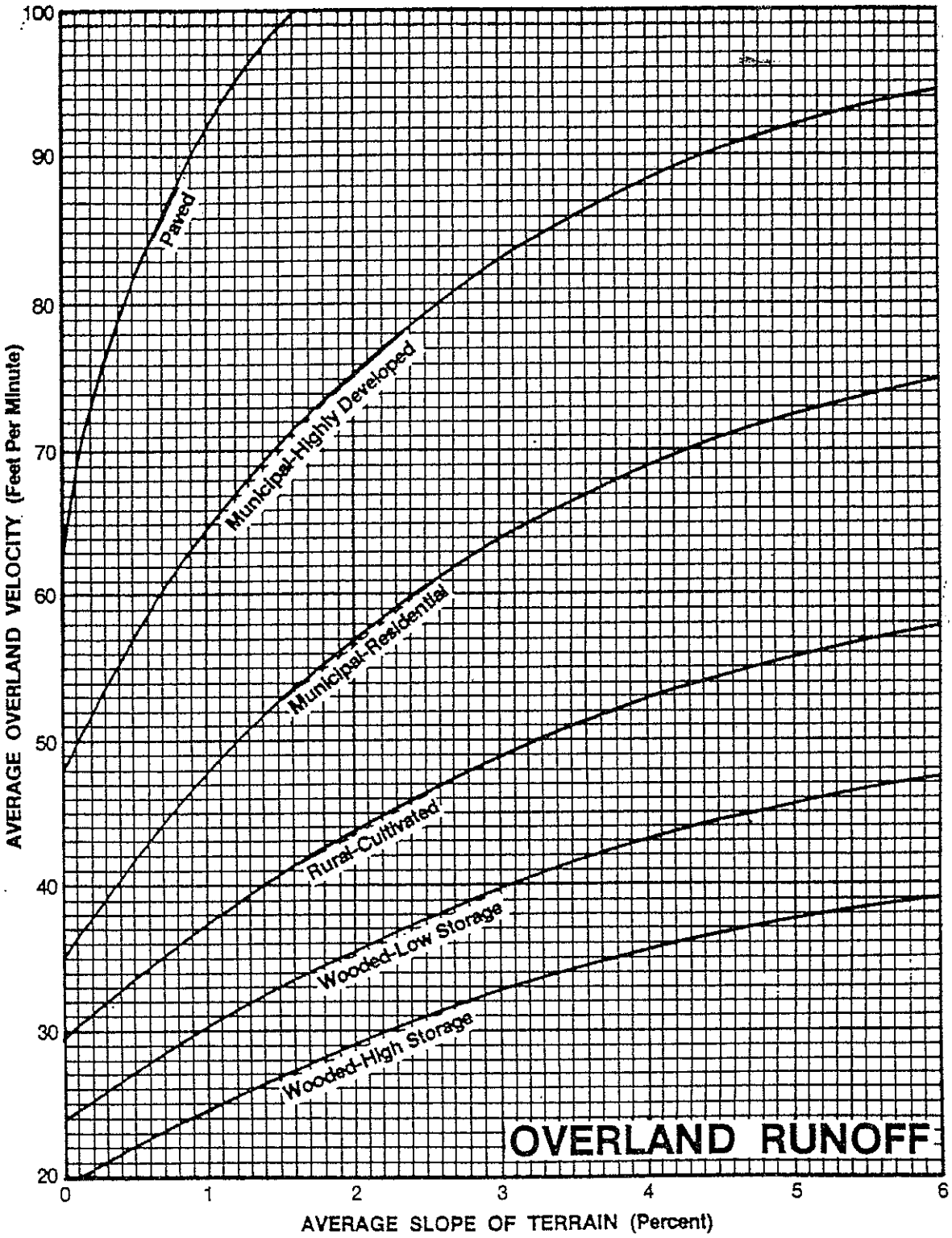

Overland Flow Velocities for Various Land Use Types

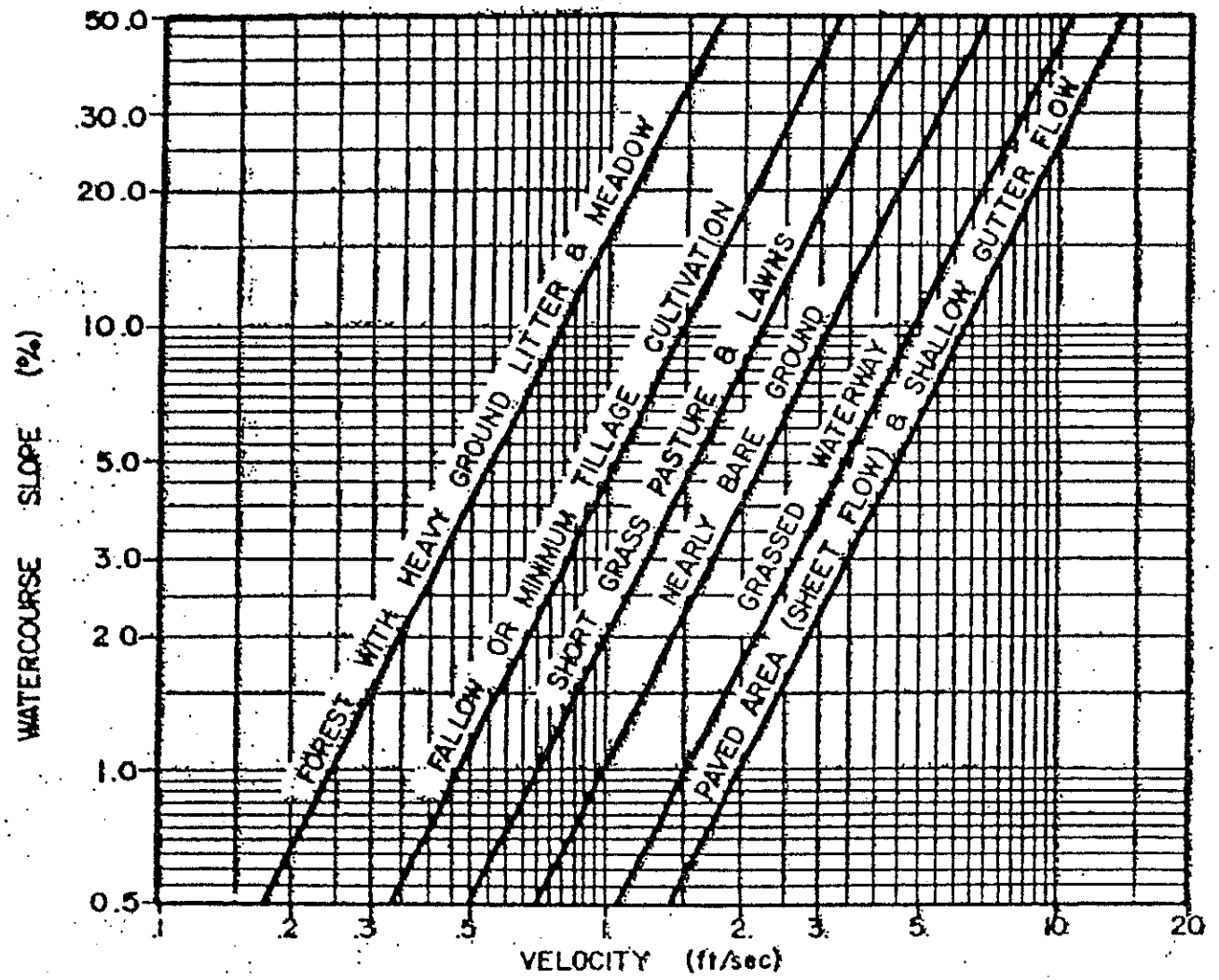

The average velocities for estimating travel time for overland flow (SCS method). (*Source*: SCS, 1975.)

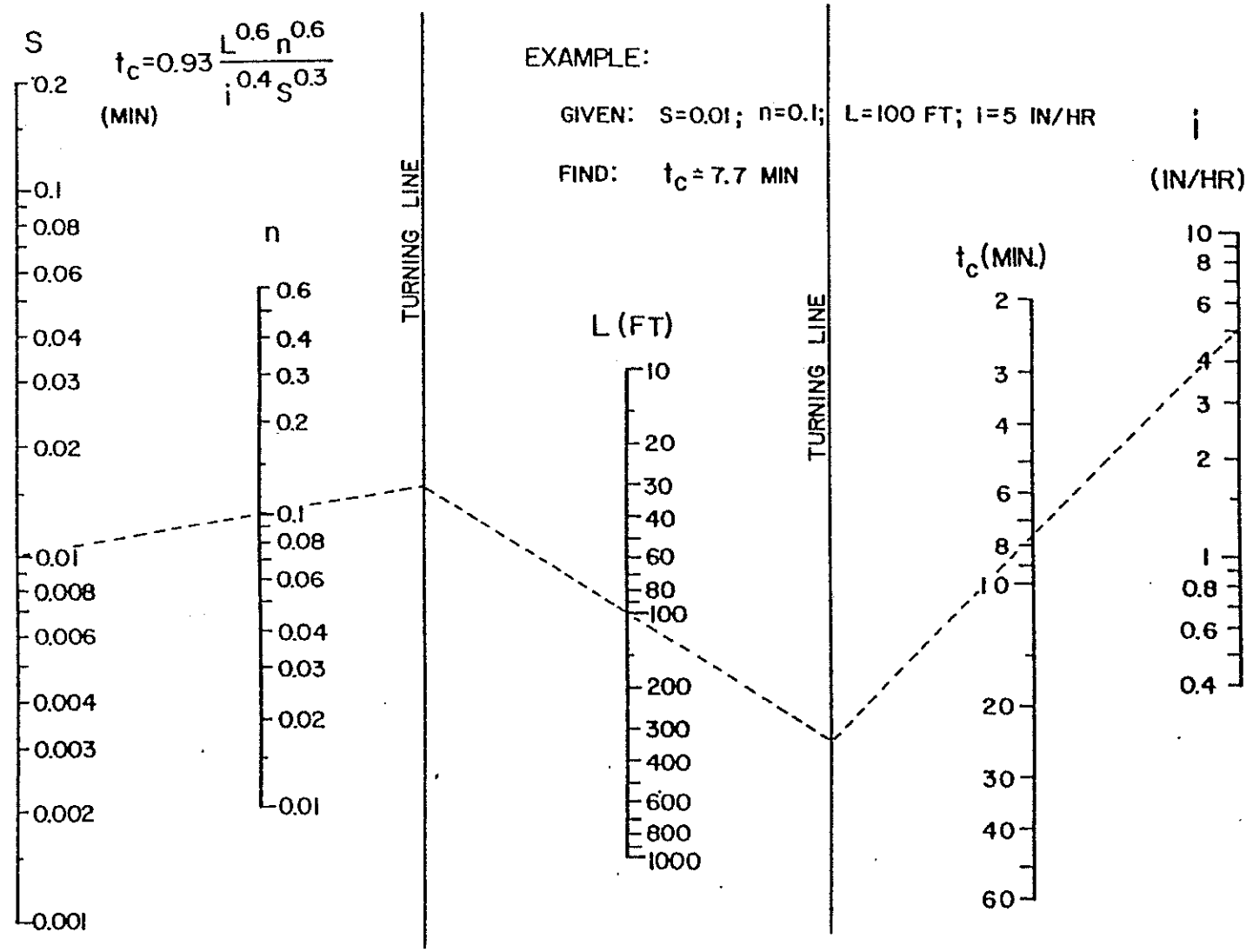

Reference: USDOT, FHWA, HEC-12 (1984).

Kinematic Wave Formulation for Determining Overland Flow Travel Time

EASEMENT GUIDELINES FOR PIPE SYSTEMS

I. LESS THAN FIVE FEET OF COVER OVER THE PIPE

A. Diameter equal to or less than 30" round or equivalent: easement shall be 10 feet either side of the centerline of the pipe.

B. Diameter greater than 30" round or equivalent: easement shall be 20 feet plus the outside diameter of the pipe in width (rounded up to the nearest 5 foot increment) and centered on the centerline of the pipe.

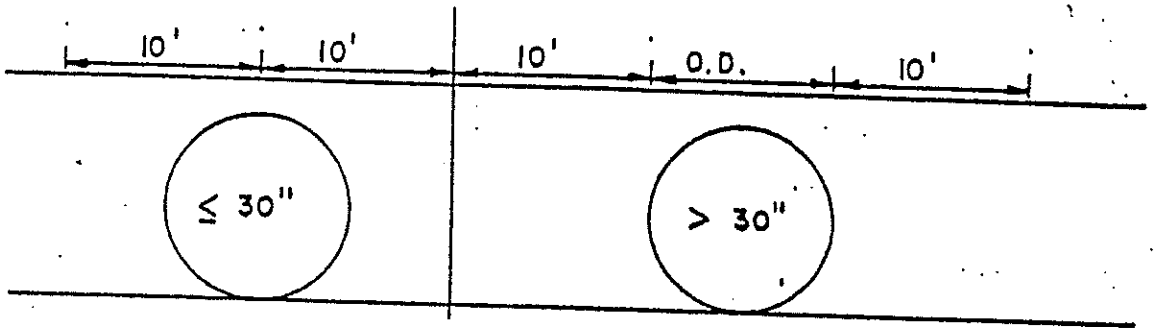

II. EQUAL TO OR GREATER THAN FIVE FEET OF COVER OVER THE PIPE

Easement will be equal to the outside diameter of the pipe plus twice the distance from the ground surface to the trench bottom measured at the deepest point along the path of the proposed easement (rounded up to the nearest five foot increment), and centered on the centerline of the pipe. Minimum easement width is 20 feet.

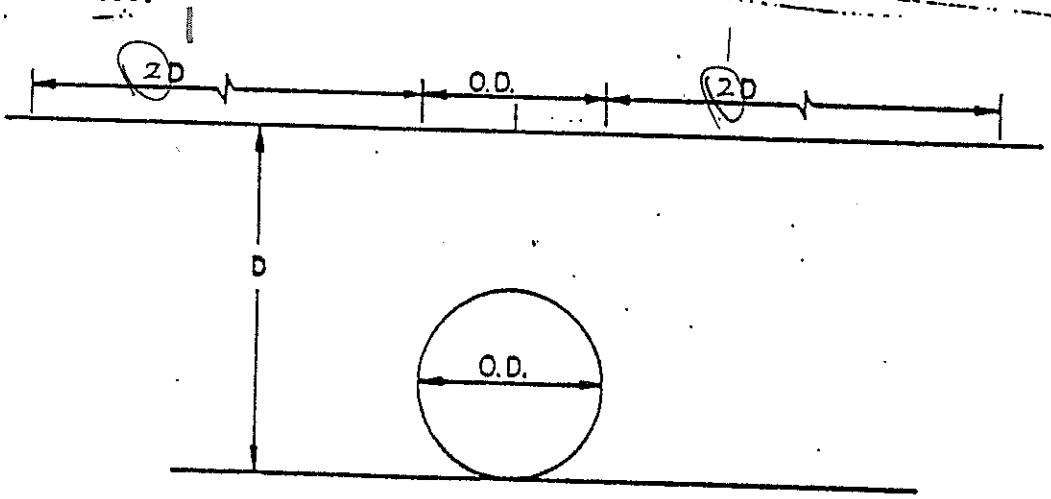

DRAINAGE R/W GUIDELINES FOR MAJOR OPEN DRAINAGE CHANNELS

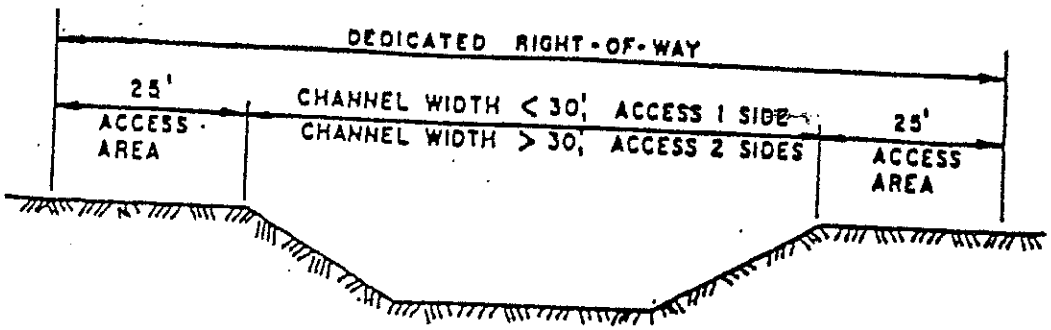

DRAINAGE EASEMENT GUIDELINES FOR MINOR OPEN DRAINAGE CHANNELS

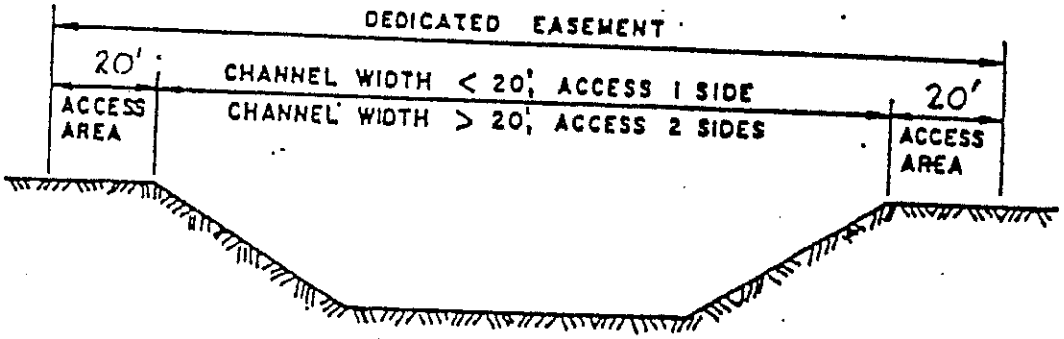

LAKE RESERVATION GUIDELINES FOR DETENTION AND RETENTION BASINS

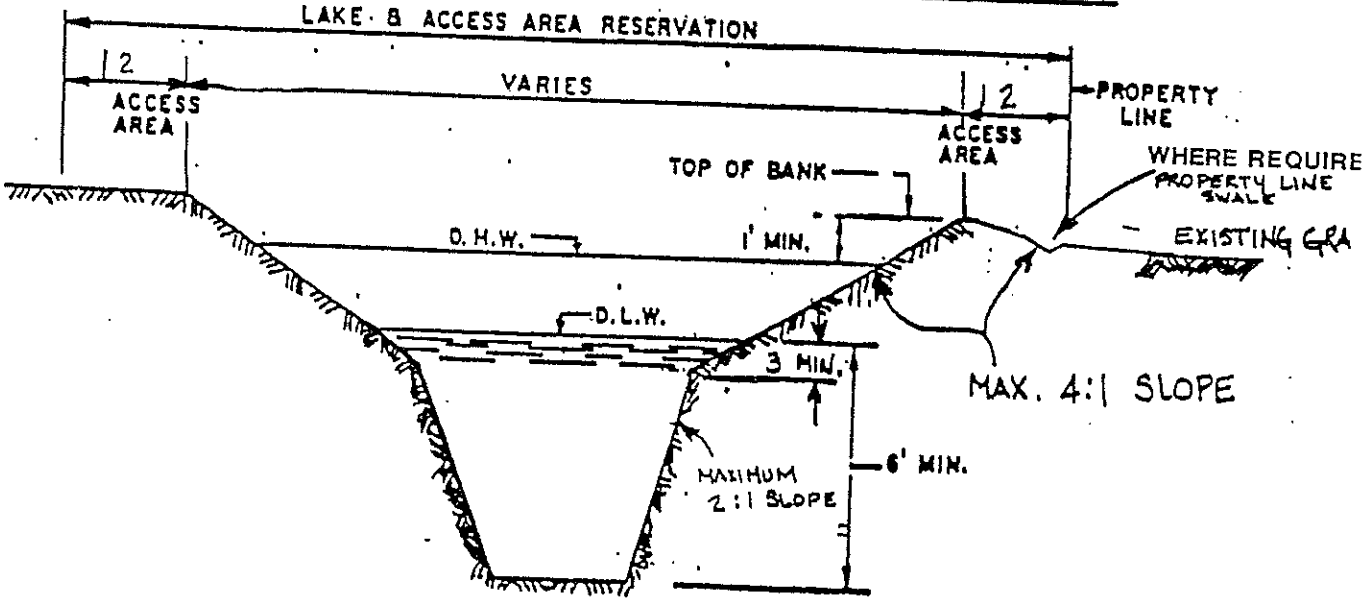

EASEMENT GUIDELINES FOR BOX SYSTEMS

1. All dimensions shown are external dimensions.

2. Depth of cover is measured from the ground surface to the top of the box.

3. Easement Width = [(2) x (Depth of Cover + Box Height)] + Box Width. All calculations are to be rounded up to the nearest five foot increment for easement purposes.

4. Minimum easement width is 20 feet.

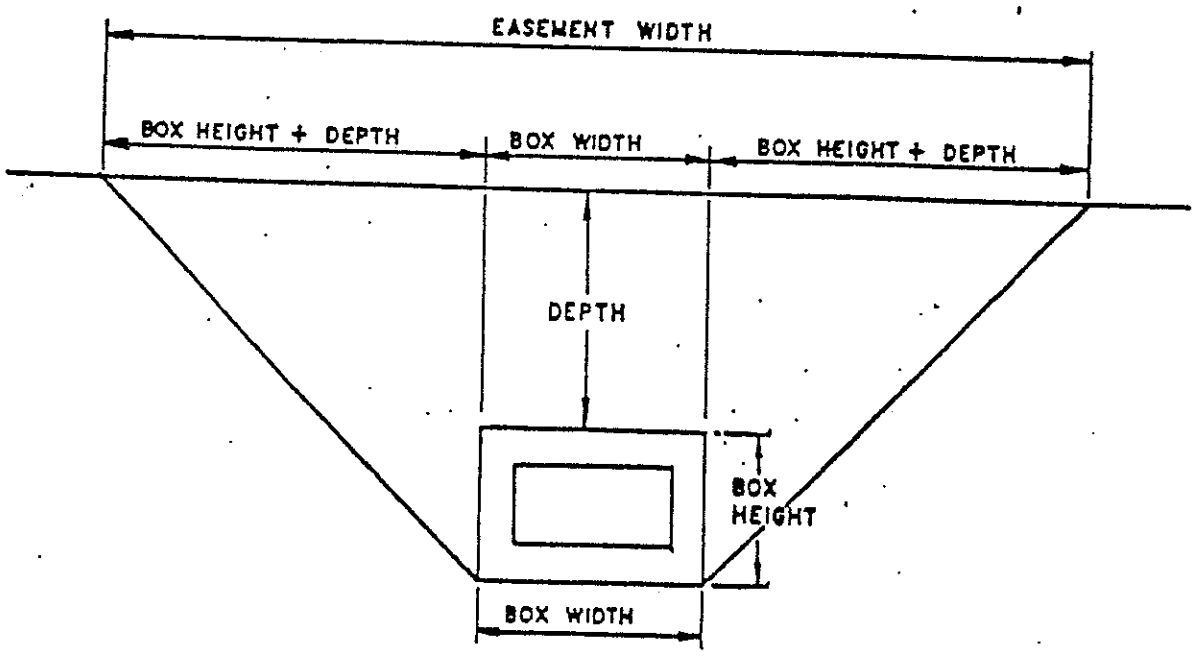

DESIGN STORM FREQUENCY FACTORS
FOR PERVIOUS AREA RUNOFF COEFFICIENTS

Design Storm Return Period (years)	Frequency Factor, X_T
2 to 10	1.0
25	1.1
50	1.2
100	1.25

Reference: Wright-McLaughlin Engineers (1969).

SCS RUNOFF CURVE NUMBERS FOR SELECTED AGRICULTURAL, SUBURBAN, AND URBAN LAND USE

Land Use Description		Hydrologic Soil Group A	B	C	D
Cultivated Land[a]:					
Without conservation treatment		72	81	88	91
With conservation treatment		62	71	78	81
Pasture or range land:					
Poor condition		68	79	86	89
Good condition		39	61	74	80
Meadow: good condition		30	58	71	78
Wood or Forest Land:					
Thin stand, poor cover, no mulch		45	66	77	83
Good cover[b]		25	55	70	77
Open Spaces, Lawns, Parks, Golf Courses, Cemeteries:					
Good condition: grass cover on 75% or more of the area		39	61	74	80
Fair condition: grass cover on 50% to 75% of the area		49	69	79	84
Poor condition: grass cover on 50% or less of the area		68	79	86	89
Commercial and Business Areas (85% impervious)		89	92	94	95
Industrial Districts (72% impervious)		81	88	91	93
Residential[c]:					
Average lot size	Average % Impervious[d]				
1/8 acre or less	65	77	85	90	92
1/4 acre	38	61	75	83	87
1/3 acre	30	57	72	81	86
1/2 acre	25	54	70	80	85
1 acre	20	51	68	79	84
Paved Parking Lots, Roofs, Driveways[e]:		98	98	98	98
Streets and Roads:					
Paved with curbs and storm sewers[e]		98	98	98	98
Gravel		76	85	89	91
Dirt		72	82	87	89
Paved with open ditches		83	89	92	93
Newly graded area (no vegetation established)[f]		77	86	91	94

[a]For a more detailed description of agricultural land use curve numbers, refer to Table 5-9.

[b]Good cover is protected from grazing and litter and brush cover soil.

[c]Curve numbers are computed assuming the runoff from the house and driveway is directed toward the street with a minimum of roof water directed to lawns where additional infiltration could occur.

[d]The remaining pervious areas (lawn) are considered to be in good pasture condition for these curve numbers.

[e]In some warmer climates of the country, a curve number of 96 may be used.

[f]Use for temporary conditions during grading and construction.

Note: These values are for Antecedent Moisture Condition II, and $I_a = 0.2S$.

Reference: USDA, SCS, TR-55 (1984).

SCS RUNOFF CURVE NUMBERS FOR AGRICULTURAL LAND USES

Land Use	Cover: Treatment or Practice	Cover: Hydrologic Condition	Hydrologic Soil Group A	B	C	D
Fallow	Straight row	----	77	86	91	94
Row crops	Straight row	Poor	72	81	88	91
	Straight row	Good	67	78	85	89
	Contoured	Poor	70	79	84	88
	Contoured	Good	65	75	82	86
	and terraced	Poor	66	74	80	82
	and terraced	Good	62	71	78	81
Small grain	Straight row	Poor	65	76	84	88
	Straight row	Good	63	75	83	87
	Contoured	Poor	63	74	82	85
	Contoured	Good	61	73	81	84
	Contoured	Good	55	69	78	83
	and terraced	Poor	61	72	79	82
	and terraced	Good	59	70	78	81
Close seeded legumes[a] or rotation meadow	Straight row	Poor	66	77	85	89
	Straight row	Good	58	72	81	85
	Contoured	Poor	64	75	83	85
	and terraced	Good	55	69	78	83
	Contoured	Poor	63	73	80	83
	and terraced	Good	51	67	76	80
Pasture or range		Poor	68	79	86	89
		Fair	49	69	79	84
		Good	39	61	74	80
	Contoured	Poor	47	67	81	88
	Contoured	Fair	25	59	75	83
	Contoured	Good	6	35	70	79
Meadow		Good	30	58	71	78
Woods		Poor	45	66	77	83
		Fair	36	60	73	79
		Good	25	55	70	77
Farmsteads		----	59	74	82	86
Roads (dirt)[b]		----	72	82	87	89
(hard surface)[b]		----	74	84	90	92

[a]Close-drilled or broadcast.

[b]Including right-of-way.

Note: These values are for Antecedent Moisture Condition II, and $I_a = 0.2S$.

Reference: USDA, SCS, NEH-4 (1972).

DISCHARGE COEFFICIENTS FOR SHARP-CRESTED
V-NOTCH WEIRS

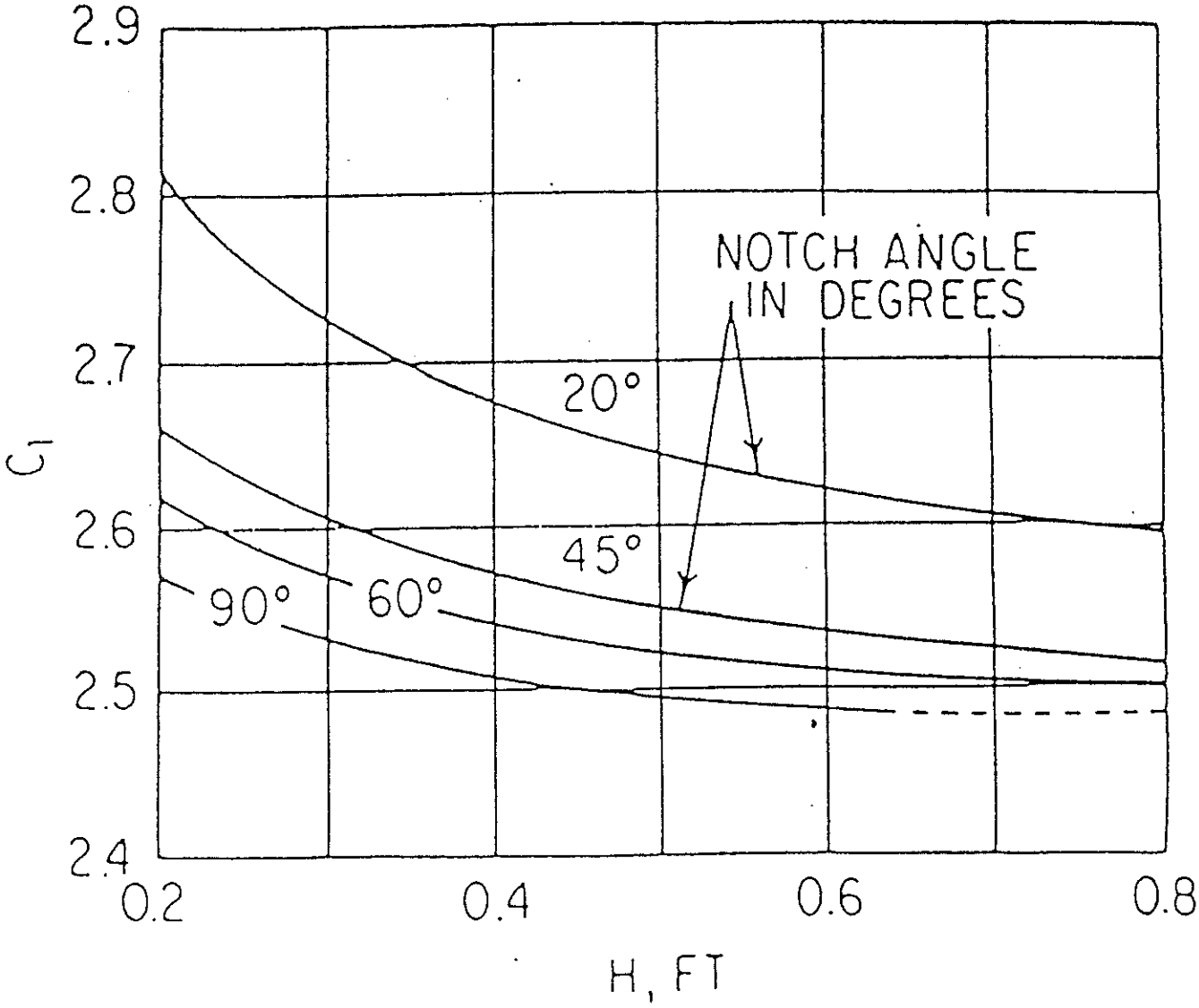

RUNOFF COEFFICIENTS [a] FOR A DESIGN STORM RETURN PERIOD OF 10 YEARS OR LESS

Slope	Land Use	Sandy Soils Min.	Sandy Soils Max.	Clay Soils Min.	Clay Soils Max.
Flat (0-2%)	Woodlands	0.10	0.15	0.15	0.20
	Pasture, grass, and farmland[b]	0.15	0.20	0.20	0.25
	Rooftops and pavement	0.95	0.95	0.95	0.95
	Pervious pavements [c]	0.75	0.95	0.90	0.95
	SFR: 1/2-acre lots and larger	0.30	0.35	0.35	0.45
	Smaller lots	0.35	0.45	0.40	0.50
	Duplexes	0.35	0.45	0.40	0.50
	MFR: Apartments, townhouses, and condominiums	0.45	0.60	0.50	0.70
	Commercial and Industrial	0.50	0.95	0.50	0.95
Rolling (2-7%)	Woodlands 0.15	0.20	0.20	0.25	
	Pasture, grass, and farmland [b]	0.20	0.25	0.25	0.30
	Rooftops and pavement	0.95	0.95	0.95	0.95
	Pervious pavements [c]	0.80	0.95	0.90	0.95
	SFR: 1/2-acre lots and larger	0.35	0.50	0.40	0.55
	Smaller lots	0.40	0.55	0.45	0.60
	Duplexes	0.40	0.55	0.45	0.60
	MFR: Apartments, townhouses, and condominiums	0.50	0.70	0.60	0.80
	Commercial and Industrial	0.50	0.95	0.60	0.95
Steep (7%+)	Woodlands 0.20	0.25	0.25	0.30	
	Pasture, grass and farmland [b]	0.25	0.35	0.30	0.40
	Rooftops and pavement	0.95	0.95	0.95	0.95
	Pervious pavements [c]	0.85	0.95	0.90	0.95
	SFR: 1/2-acre lots and larger	0.40	0.55	0.50	0.65
	Smaller lots	0.45	0.60	0.55	0.70
	Duplexes	0.45	0.60	0.55	0.70
	MFR: Apartments, townhouses, and condominiums	0.60	0.75	0.65	0.85
	Commercial and Industrial	0.60	0.95	0.65	0.95

[a]Weighted coefficient based on percentage of impervious surfaces and green areas must be selected for each site.

[b]Coefficients assume good ground cover and conservation treatment.

[c]Depends on depth and degree of permeability of underlying strata.

Note: SFR - Single Family Residential
MFR - Multi-Family Residential

APPENDIX "B"

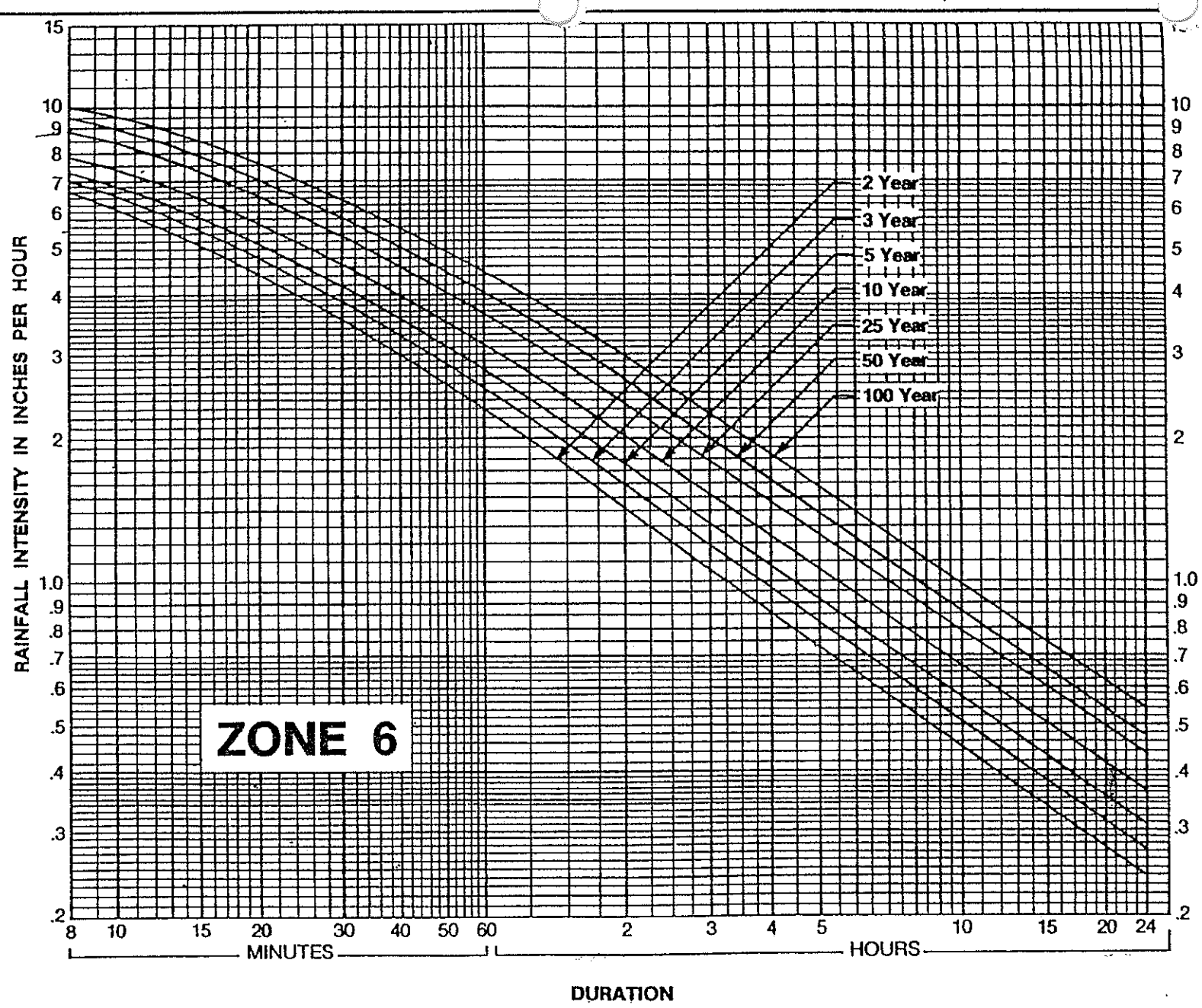

Rainfall Intensity-Duration-Frequency Curves for Zone 6

SOUTHWEST FLORIDA WATER MANAGEMENT DISTRICT

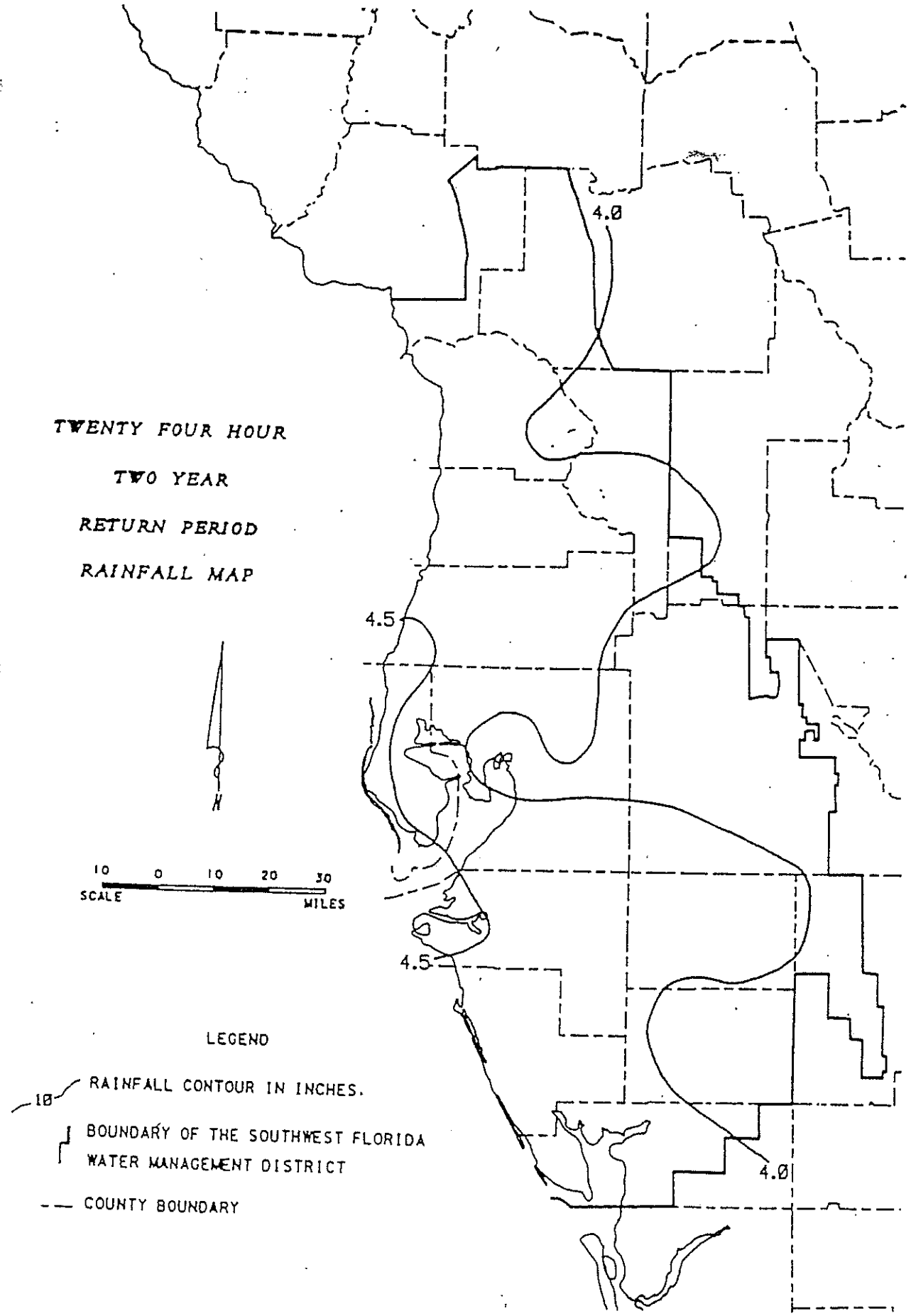

SOUTHWEST FLORIDA WATER MANAGEMENT DISTRICT

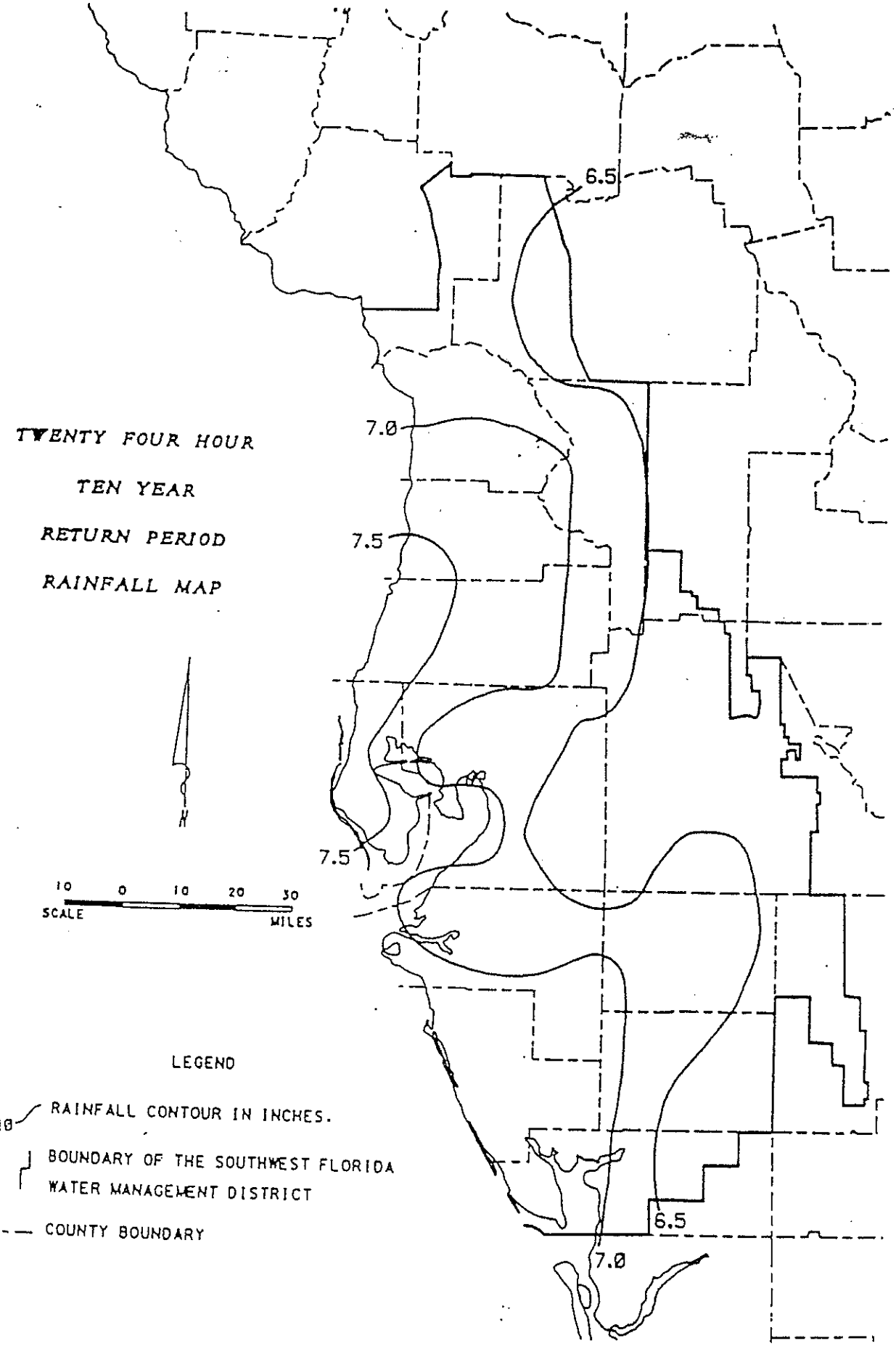

SOUTHWEST FLORIDA WATER MANAGEMENT DISTRICT

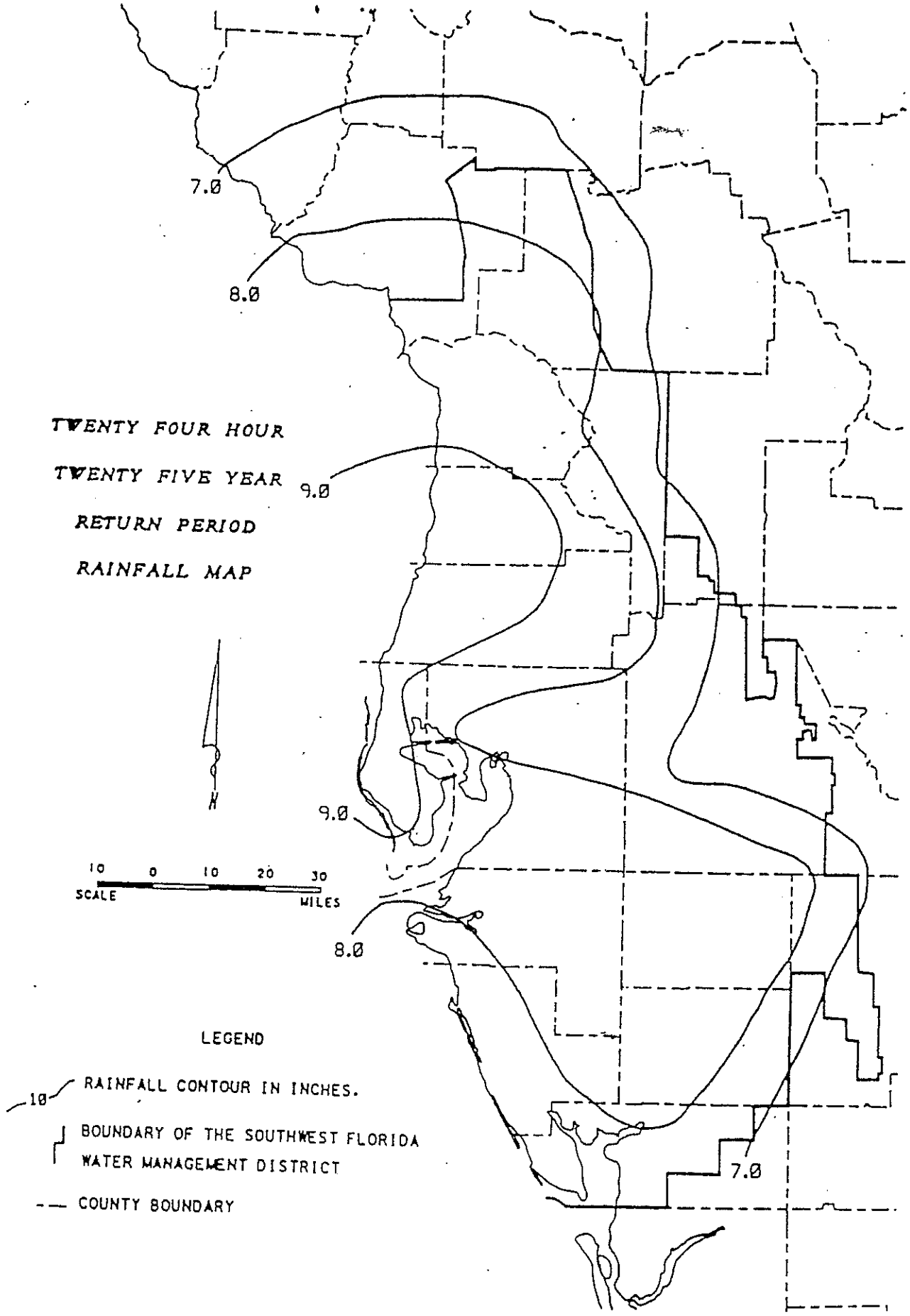

SOUTHWEST FLORIDA WATER MANAGEMENT DISTRICT

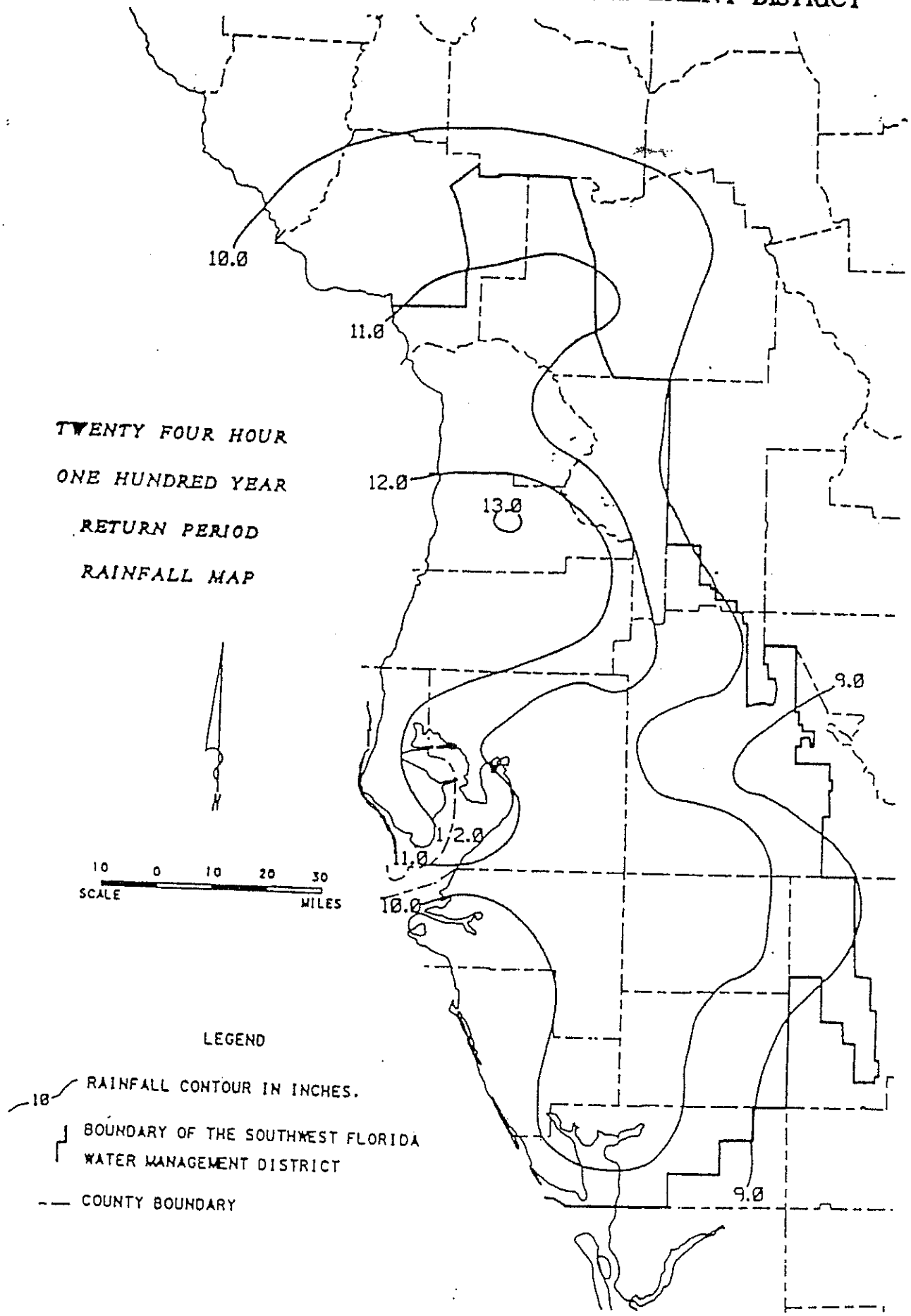

APPENDIX "C"

DRAWDOWN WORKSHEET FOR TYPE V (a) UNDERDRAIN

(Using Darcy's Law for Flow-Through Porous Material)

1	2	3	4	5	6	7	8	9	10	11	12	13	14
E Elevation (NGVD)	h Total Head (ft)	Δh Incr. Head (ft)	V Total Volume (ft^3)	ΔV Incr. Volume (ft^3)	I max Maximum Flow Length Through Filter (ft)	I min Minimum Flow Length Through Filter (ft)	I avg Avg. Flow Length Through Filter (ft)	Hydraulic Gradient $i = h/la$	Area of Filter $A = Lxh$ (ft^2)	Darcy Flow $Q = KIA$ (ft^3/hr)	Avg. Flow $\frac{Q_1 + Q_2}{2}$ (ft^3/hr)	ΔT Incr. Time (hr)	ΣT Total Time (hr)

Assumed Length L = _____ Hydraulic Conductivity K = _____ ft/hr

See Figure 13-4 for Typical Section Details

Drawdown Worksheet for Type V (a) Underdrain

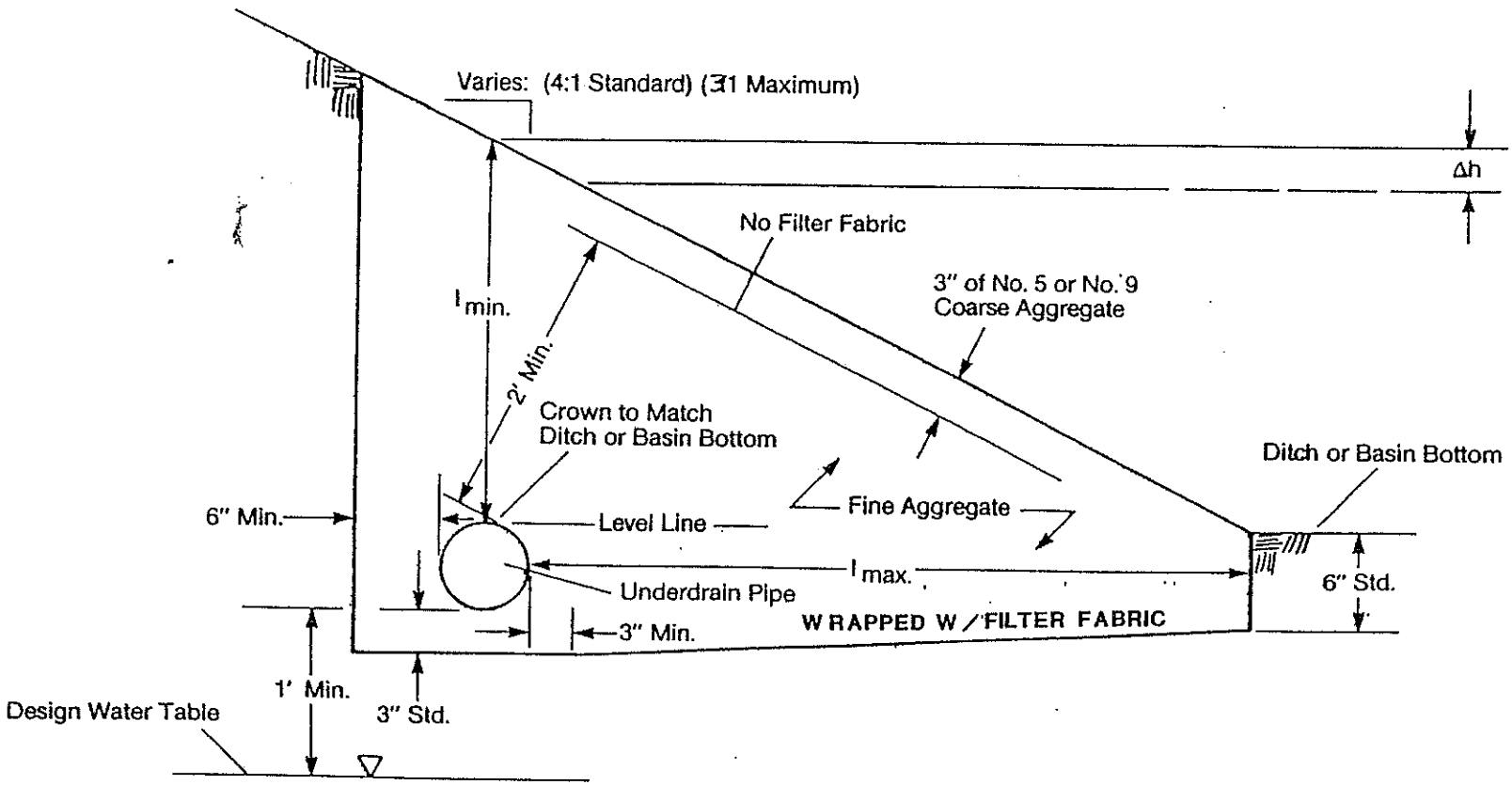

Typical Section for the Type V (a) Underdrain

APPENDIX “D”

LOT DRAINAGE INDEX

GENERAL NOTES:

1.) FOR CLOSED DRAINAGE, SHOW CURBS, GUTTERS AND SIDEWALKS, IF APPLICABLE.

2.) EXISTING DRAINAGE SHALL BE MAINTAINED OR IMPROVED.

3.) MINIMUM DRIVEWAY RISE FROM CURB TO GARAGE IS 1%.

4.) SHOW ALL EASEMENTS.

5.) MINIMUM GRADE SLOPES ARE AS FOLLOWS: FRONT YARD – 2.0%; REAR AND SIDE YARDS – 1.5%; SWALES – 1.0%.

6.) MINOR MODIFICATIONS TO ACCOMMODATE SPECIAL CONDITIONS SUCH AS TREES MAY BE APPROVED BY THE ACCESS/DRAINAGE INSPECTOR.

7.) LOTS WITH SPECIAL CONDITIONS MAY HAVE SLOPES BASED ON AN ENGINEER'S DETAILED DESIGN APPROVED BY THE TRANSPORTATION DIRECTOR OR A DESIGNEE.

8.) DEVIATIONS DUE TO EXISTING TREES, VEGETATION OR OTHER EXTENUATING CIRCUMSTANCES MAY BE APPROVED. DIFFICULTIES ARISING FROM SUCH DEVIATIONS ARE THE RESPONSIBILITY OF THE PROPERTY OWNER TO SATISFACTORILY RESOLVE.

9.) LOT SLOPES APPLY TO A 75' RADIUS FROM THE EDGE OF HOUSE. THE INTENT IS TO ALLOW FLEXABILITY ON LARGER LOTS.

10.) ALL CONFLICTS SHALL BE REMEDIED TO THE SATISFACTION OF THE TRANSPORTATION DIRECTOR.

11.) PERMITTEE SHALL SUBMIT A COPY OF THE APPROVED SUBDIVISION DRAINAGE PLAN. SIZE REQUIREMENTS ARE 8–1/2"x11", 8–1/2"x14" OR 11"x17" AT A SCALE OF 1"=100' OR 1"=200' FOR LOTS OF 5 ACRES OR MORE.

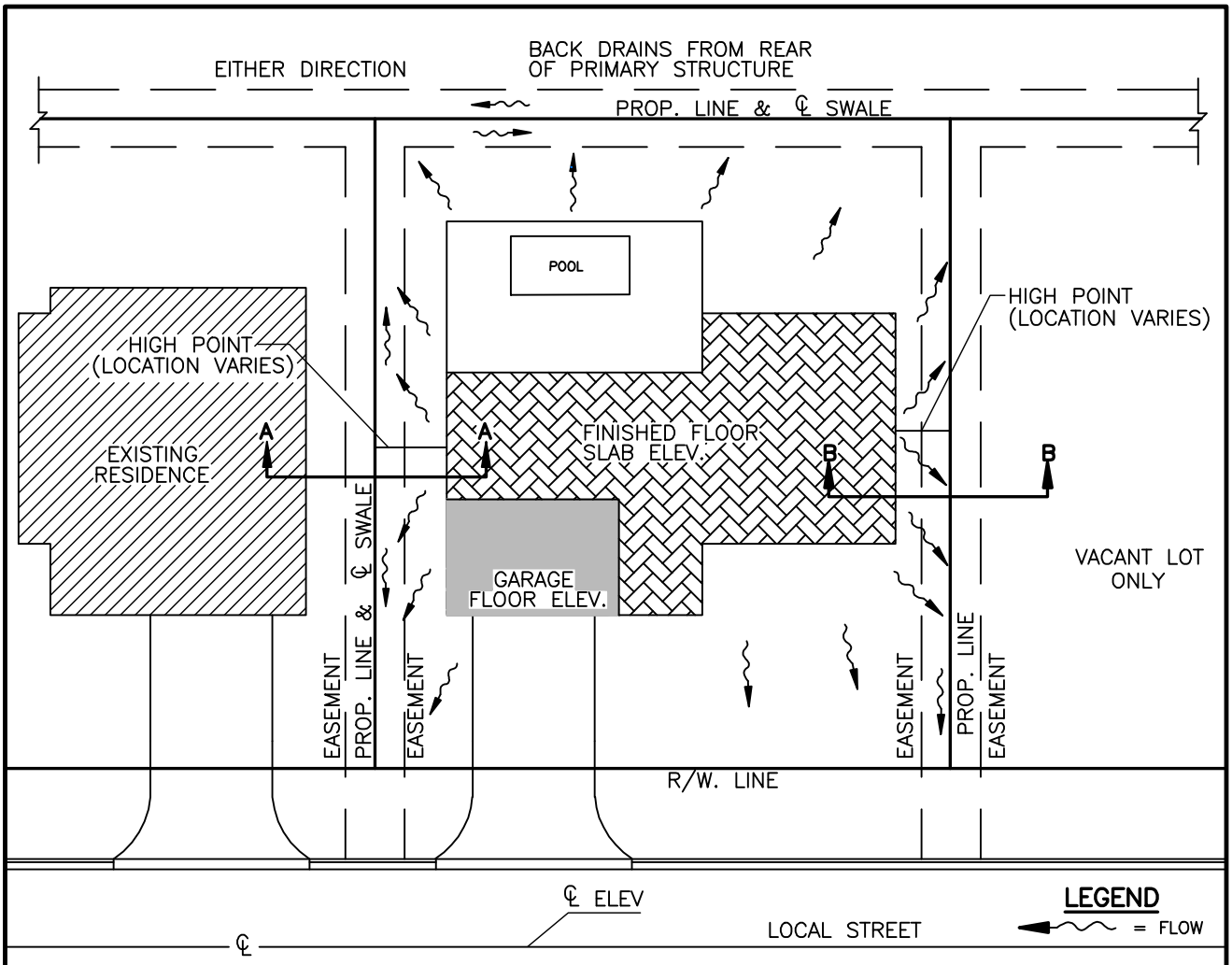

NOTE: THE INTENT IS TO CONVEY RUNOFF TO THE PUBLIC R/W BY USING ONE, OR ANY COMBINATION OF, BUT NOT LIMITED TO: SWALES, GUTTERS, YARD DRAINS, SEEPAGE TRENCHES OR SLOTTED PIPE.

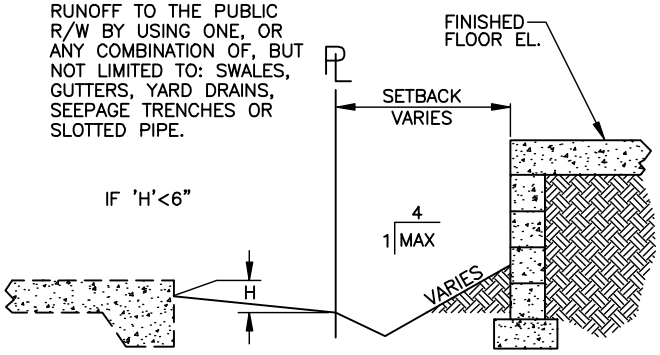

SECTION A–A
NTS

NOTE: INTENT IS TO CONSTRUCT 1/2 OF FUTURE DRAINAGE SWALE.

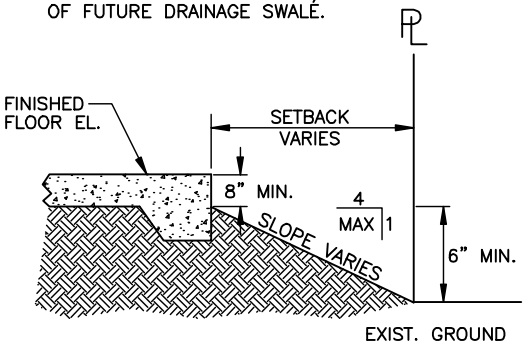

SECTION B–B
NTS

NOTES:

1.) STEM WALL FOUNDATION REQUIRED IF 4:1 MAX. GRADE SLOPES CANNOT BE ACHIEVED WITH MONOLITHIC SLAB DESIGN.

2.) ALL MEASUREMENTS ARE EQUIVALENT TO TOP OF SOD MULCH.

3.) THIS STANDARD IS INTENDED TO APPLY FOR INFILL LOTS.

MANATEE COUNTY
TRANSPORTATION DEPARTMENT

REV.BY	DATE

6/12/07
DATE OF B.O.C.C. APPROVAL

LOT DRAINAGE PATTERN EXAMPLE FOR SITE

700.2

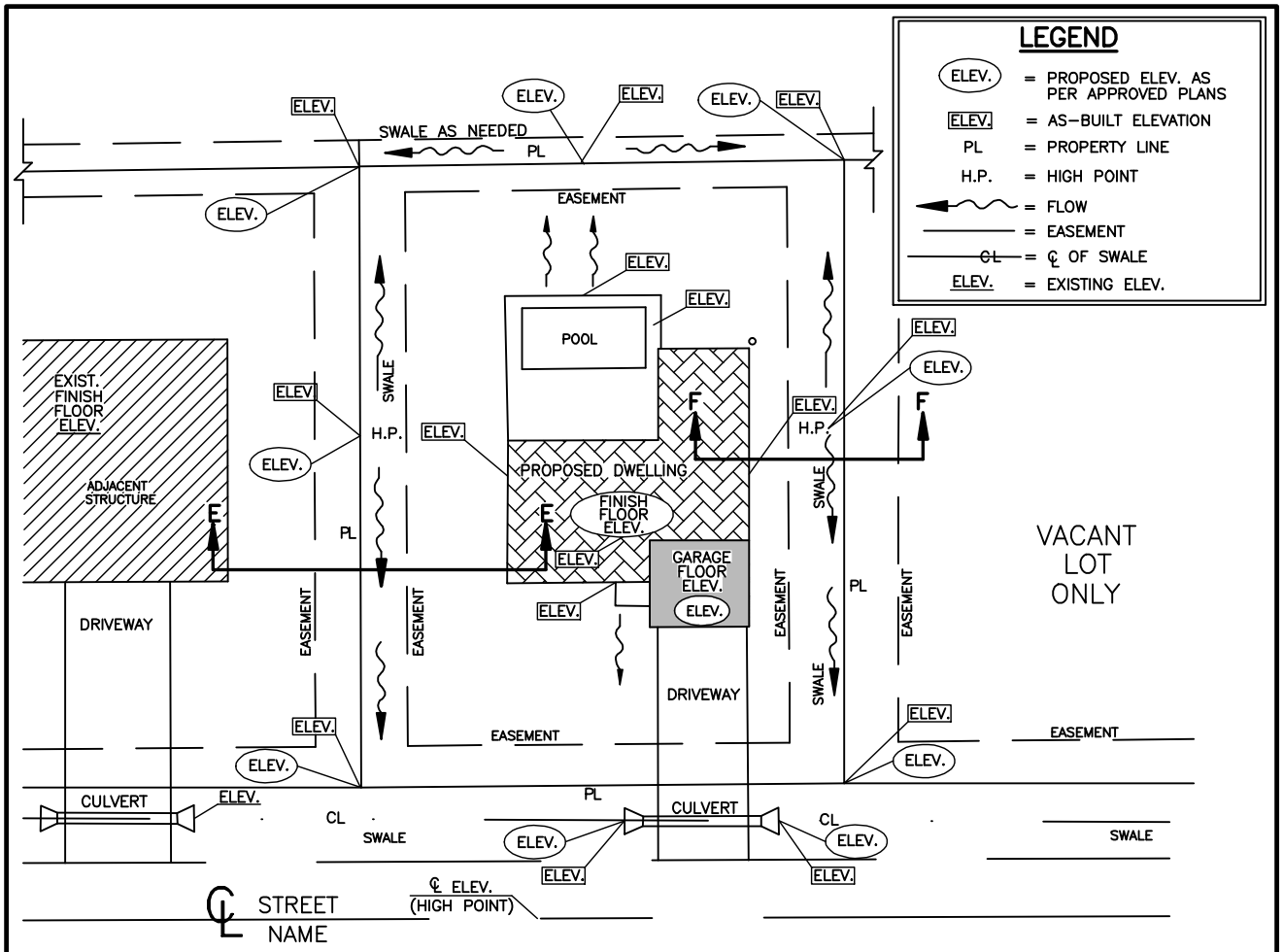

NOTE: INTENT IS TO CONSTRUCT REMAINDER OF DRAINAGE SWALE.

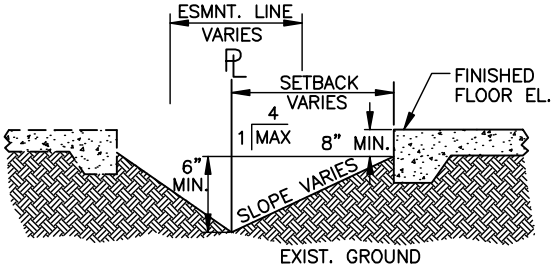

SECTION E–E
NTS

NOTE: INTENT IS TO CONSTRUCT 1/2 OF FUTURE DRAINAGE SWALE.

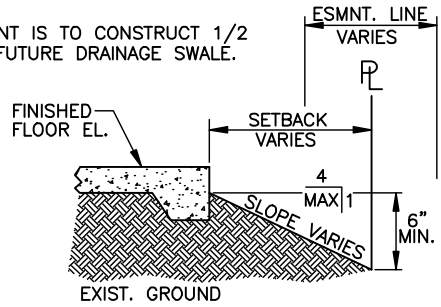

SECTION F–F
NTS

NOTES:

1.) USE SECTION F–F IF NO SIDE OR REAR LOT LINE DRAINAGE SWALES ARE PRESENT. THE PROPOSED TOE OF SLOPE ELEVATION MUST MATCH THE EXISTING GRADE AT THE PROPERTY LINE.

2.) FOR MID LOT TO BACK/FRONT, FINISH FLOOR ELEVATION = 21" MINIMUM ABOVE ℄ OF ROADWAY.

MANATEE COUNTY
TRANSPORTATION DEPARTMENT

REV.BY	DATE

6/12/07
DATE OF B.O.C.C. APPROVAL

MID LOT TO BACK/ MID LOT TO FRONT DRAINAGE PLAN

700.3

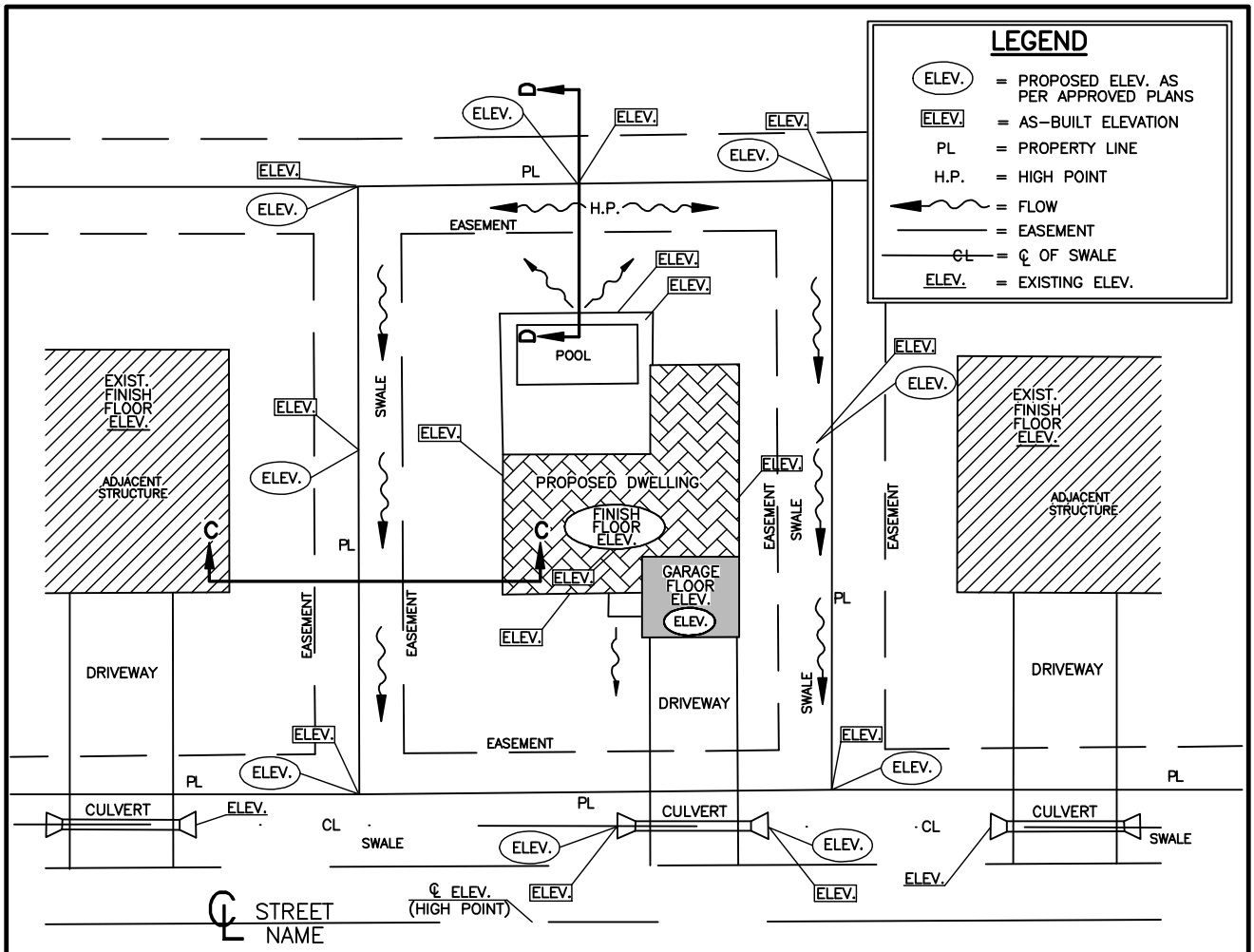

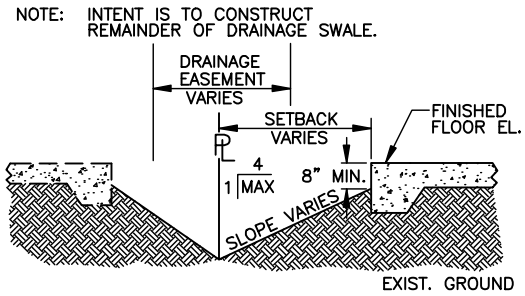

SECTION C–C
NTS

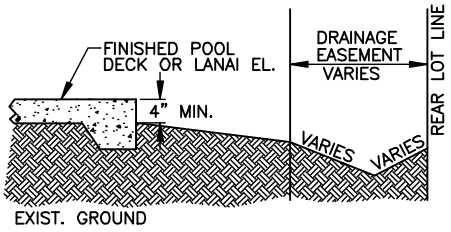

SECTION D–D
NTS

NOTES:

1.) USE SECTION D–D IF NO SIDE OR REAR LOT LINE DRAINAGE SWALES ARE PRESENT. THE PROPOSED TOE OF SLOPE ELEVATION MUST MATCH THE EXISTING GRADE AT THE PROPERTY LINE.

2.) FOR REAR TO FRONT LOT DRAINAGE, FINISH FLOOR ELEVATION = 24" MINIMUM ABOVE ℄ OF ROADWAY.

MANATEE COUNTY
TRANSPORTATION DEPARTMENT

REV.BY	DATE

6/12/07
DATE OF B.O.C.C. APPROVAL

REAR TO FRONT LOT DRAINAGE PLAN

700.4

MANATEE COUNTY
PUBLIC WORKS STANDARDS

PART 3. HIGHWAY & TRAFFIC STANDARDS MANUAL

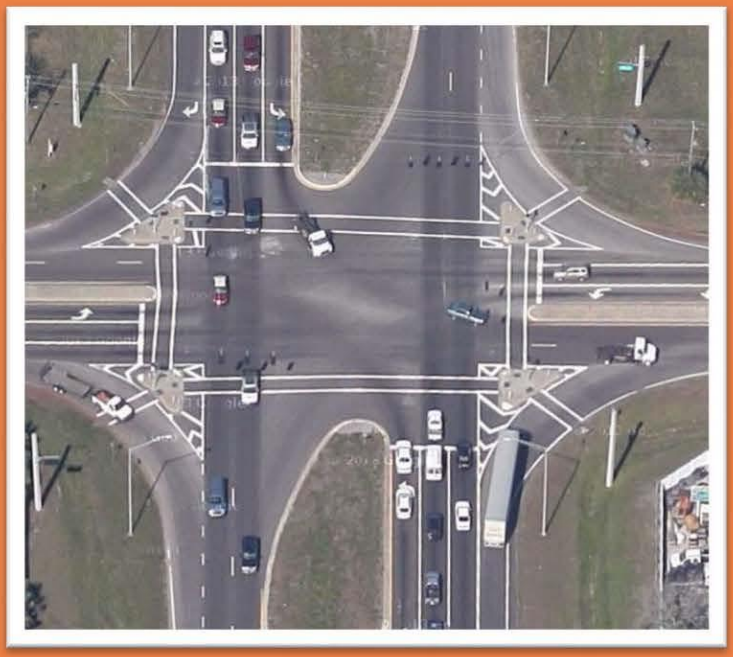

June 2015

Manatee County
Public Works Standards

Part 3. Highway &Traffic Standards Manual

June 2015

TABLE OF CONTENTS

TABLE OF FIGURES

DETAIL SHEETS

DISCLAIMER

Substantial effort has been made to ensure the information contained in these standards is accurate. However, Manatee County cannot accept responsibility for any errors or oversights in the use of the material or in the preparation of the engineering plans. This publication is intended for use by professional personnel competent to evaluate the significance and limitations of its contents and be able to accept responsibility for the application of the material it contains.

The designer must recognize that no handbook or code can substitute for experienced engineering judgement. Some of the recommendations are under further review and may be updated later. Users of these standards are encouraged to offer comments to Manatee County on the contents of this publication and suggestions for changes in future editions.

These standards are under constant review and are subject to changes approved by the Board of County Commissioners. The Department Director shall interpret these standards, as needed, for application and resolution of conflicts.

Note: all construction and standards referenced within shall meet or exceed FDOT Roadway and Traffic Design standards (latest revision) and FDOT Standard Specifications for Road and Bridge Construction (latest revision), unless otherwise noted.

GLOSSARY

A Policy on Geometric Design of Highways and Streets .....AASHTO Greenbook

Roadway and Traffic Design Standards For Design, Construction,
Maintenance And Utility Operations (FDOT) .....FDOT Roadway Design Standards

ADA Standards for Accessible Design..... ADA Standards

Manual on Uniform Traffic Control Devices.....MUTCD

Manual of Uniform Minimum Standards for Design, Construction and
Maintenance for Streets and Highways ..... Florida Greenbook

Standard Specifications for Road and Bridge Construction .....Standards Specifications

MANATEE COUNTY
PUBLIC WORKS STANDARDS MANUAL

PART 3 - HIGHWAYS & TRAFFIC STANDARDS

SECTION 3.1 ROADS

3.1.1 GENERAL REQUIREMENTS

A. All county road construction shall conform to the Manatee County Land Development Code and the requirements of this section, including detail sheets 401.0 through 405.0 .

B. Asphaltic Concrete Type S: Shall be per Section 331, Florida Standard Specifications 2000.

Asphaltic Concrete Type Ill: Shall be per Section 333, Florida Standard Specifications 2000.

(1) Superpave mixes equivalent to FDOT Type S mixes are an accepted alternative upon director's approval.

(2) Surface material will be consistent with existing surface, or better.

C. Limerock Base Course: Shall be per Section 285, Florida Standard Specifications 2000.

D. Crushed concrete base course is acceptable unless otherwise noted. Please Contact Highway Engineering Division for the current specifications of Crushed Concrete Base.

E. Stabilized Sub-Grade: Shall be per Sections 160 and 914, Florida Standard Specifications, latest edition.

F. Drainage shall be per Florida Standard Specifications, latest edition. Soft, yielding or super-saturated material that will not readily compact shall be considered unacceptable for backfill. This is at the discretion of the field engineer. This type of existing material must be excavated from the road footprint to a depth as set by an approved testing lab.

G. Soil Cement shall be per Section 270, excluding Sub-Section 270-4.3.1 ("Mix in place"), Florida Standard Specifications 2000.""

H. Concrete Gutters shall be per Section 520, Florida Standard Specifications, latest edition.

I. Topsoil shall be per Section 987, Florida Standard Specifications, latest edition.

Sodding shall be per Section 575, Florida Standard Specifications, latest edition.

Grassing shall be per Section 570, Florida Standard Specifications, latest edition.

(1) Entire right-of-way between road and property line, including median, shall be fertilized (1000 lbs. of slow-release 8-12-6 per acre), and seeded (30 lbs. Bahia and 30 lbs. of Rye per acre) and mulched, or sodded, as directed by the engineer.

(2) Hydromulch: Shall be per Section 571, Florida Standard Specifications 2000.

J. Visibility Triangles shall be in accordance with Section 3.1.5 of this Manual, and Detail Sheets 600.7 to 600.9.

K. Handicap Ramps shall meet Florida Accessibilities Standards and Detail Sheets 302.1 to 302.3.

L. Prime coat shall be applied at a rate of 0.2 gallons per square yard. Tack coat of 0.08 gallons per square yard rate to be applied for overlay of existing roads.

M. All the signage, striping and signals (FDOT) shall conform to the latest revision of the Florida Standard Specifications, MUTCD, FDOT Design Standards and this Manual.

N. Street radii requirement shall be in accordance with Detail Sheet 402.0; however, radius should be a minimum of 50 feet where industrial or bus traffic (of 5% AADT or greater) is anticipated.

O. Cement treated aggregate base, see Detail Sheet 403.1.

P. Two lifts of asphalt is the preferred method of construction in area where extensive construction equipment will utilize the roads. A performance bond may be required for second lift.

Q. Any road widening (including divided roads) will require full width milling.

R. All stormwater pipes shall be installed behind the curb or edge of pavement and within the right of way and/or drainage easement.

S. The base, sub-base and asphalt thickness shown for 6-lane, 4-lane, Minor Collector, Rural Industrial and Urban Industrial are minimums. If the engineer can demonstrate a reduction based upon an analysis of equal single axle load, then it may be considered.

T. Minimum of two PVC schedule 40 conduits (2.0 inch min. dia.) shall be installed for all directions at the intersections of all thoroughfare roadways per the direction of the Manatee County's Traffic Engineer. Additional signal inter-connect conduit may be required between intersections at the direction of Manatee County.

3.1.2 PUBLIC STREETS

A. Limited Access on Major Thoroughfares.

(1) Applicability: The regulations in this section apply to all property fronting on or taking access from any of the following listed major thoroughfares:

a. University Parkway, between U.S. 301 and SR 70 (including future construction);

b. State Road 70 between Interstate I-75 and Verna Bethany Road;

c. State Road 64 between Interstate I-75 and County Road 675 (Waterbury Road);

d. U.S. Highway 41 between 49th Street East (Experimental Farm Road) and the north Manatee County Line; and

e. U.S. 301 between I-75 and Fort Hamer Road.

(2) University Parkway.

The Interlocal Agreement for University Parkway, between Manatee County and Sarasota County, designates University Parkway as a controlled access facility. The following are the standards adopted to implement the agreement.

a. Definitions. The following terms are defined for the purposes of this section.

Median Opening Intersection shall mean any opening within the University Parkway median that allows any intersection crossing and turning movements for vehicles to any street or driveway connecting to University Parkway.

Right Turn Intersection shall mean any access connection (street or driveway) to University Parkway not creating a Median Opening Intersection and allowing only right run in/right turn out ingress to or egress from University Parkway.

Temporary Right Turn Intersection shall mean, any access approved prior to January 1, 1994, that provides vehicular ingress to and/or egress from University Parkway; or any new right turn intersection not meeting the Right Turn Intersection location criteria.

b. Cross Access Easement. When vehicular traffic is projected to exceed seventy-five (75) vehicle trips per day on the subject property, a thirty (30) foot wide vehicular cross access easement(s) to adjacent parcels shall be granted to adjoining property owners in a location acceptable to the Department Director.

c. Median Opening Intersections: Median Opening Intersections are limited to a minimum average of one-half (½) mile spacing and are allowed only at the following University Parkway intersections (see Figures T-1 and T-2):

   i. Kentucky/28th Street Court East

   ii. Shade Avenue

   iii. Tuttle Avenue

   iv. Lockwood Ridge Road

   v. Conservatory Drive

   vi. Whitfield Avenue

   vii. DeSoto Road/Park Boulevard (extension through Longwood Run Development, former McIntosh Road)

   viii. Saunders Road (extension)

   ix. Honore Avenue

   x. Cooper Creek Road/Brown Road

   xi. As otherwise approved by the Board

d. Right Turn Intersections:

   i. Right turn intersections shall not be permitted between Interstate 75 and State Road 70.

   ii. Right turn intersections shall include adequate deceleration and acceleration traffic lanes.

   iii. Right turn intersections shall be spaced a minimum of six hundred and sixty (660) feet from a median opening intersection or another right turn intersection.

   iv. A right turn intersection shall be permitted within each area as indicated below (see Figures T-1 and T-2):

      - Between US 301 and Shade Avenue: None
      - Between Shade Avenue and Tuttle Avenue, located on a centerline six hundred sixty (660) feet west of the centerline of Tuttle Avenue.
      - Between Shade Avenue and Tuttle Avenue, on a centerline one thousand and six hundred sixty (1,660) feet west of the centerline of Tuttle Avenue and equally positioned on a property line common to the parcels known as the “Whitcomb” and “County Line Groves” parcels or within two hundred (200) feet east or west of the common property line, provided that if not located on the common property line, then a mutually agreed upon unified development plan and access plan for the two (2) parcels shall be required.

- Between Tuttle Avenue and Lockwood Ridge Road beginning at seven hundred (700) feet west of the west right-of-way line of Lockwood Ridge Road and extending an additional two hundred twenty-eight (228) feet westward.
- Between Tuttle Avenue and Lockwood Ridge Road beginning at eight hundred (800) feet east of the centerline of Tuttle Avenue and extending an additional two hundred (200) feet.
- Between Lockwood Ridge Road and Conservatory Drive beginning at eight hundred sixty-five (865) feet west of the east right-of-way line of Lockwood Ridge Road and extending an additional four hundred thirty (430) feet eastward.
- Between Conservatory Drive and Honore Avenue beginning at one thousand one hundred forty (1,140) feet west of the centerline of Honore Avenue and extending an additional one hundred (100) feet westward.
- Between Honore Avenue and I-75 beginning at eight hundred fifty (850) feet east of the centerline of Honore Avenue and extending an additional two hundred (200) feet eastward.
- Between Honore Avenue and Cooper Creek Boulevard, approximately four hundred fifty (450) feet west of Cooper Creek Boulevard.

e. A new single right turn intersection, approved after January 1, 1994, for any parcel shall be permitted until the traffic generated by the development exceeds seventy-five (75) vehicles per day based on latest edition of the Institute of Transportation Engineers' Trip Generation Manual. The temporary right turn intersection shall be eliminated when access becomes available to a median opening intersection, right turn intersection, or by a vehicular cross access easement to the above.

(3) Other Listed Thoroughfares.

a. All new direct and indirect access points shall be coordinated with the Department Director and the FDOT.

b. Approval of such access points shall include provision of sufficient right-of-way for parallel frontage roads or other means of facilitating cross-access between parcels.

Figure T - 1: Access Management for University Parkway - West

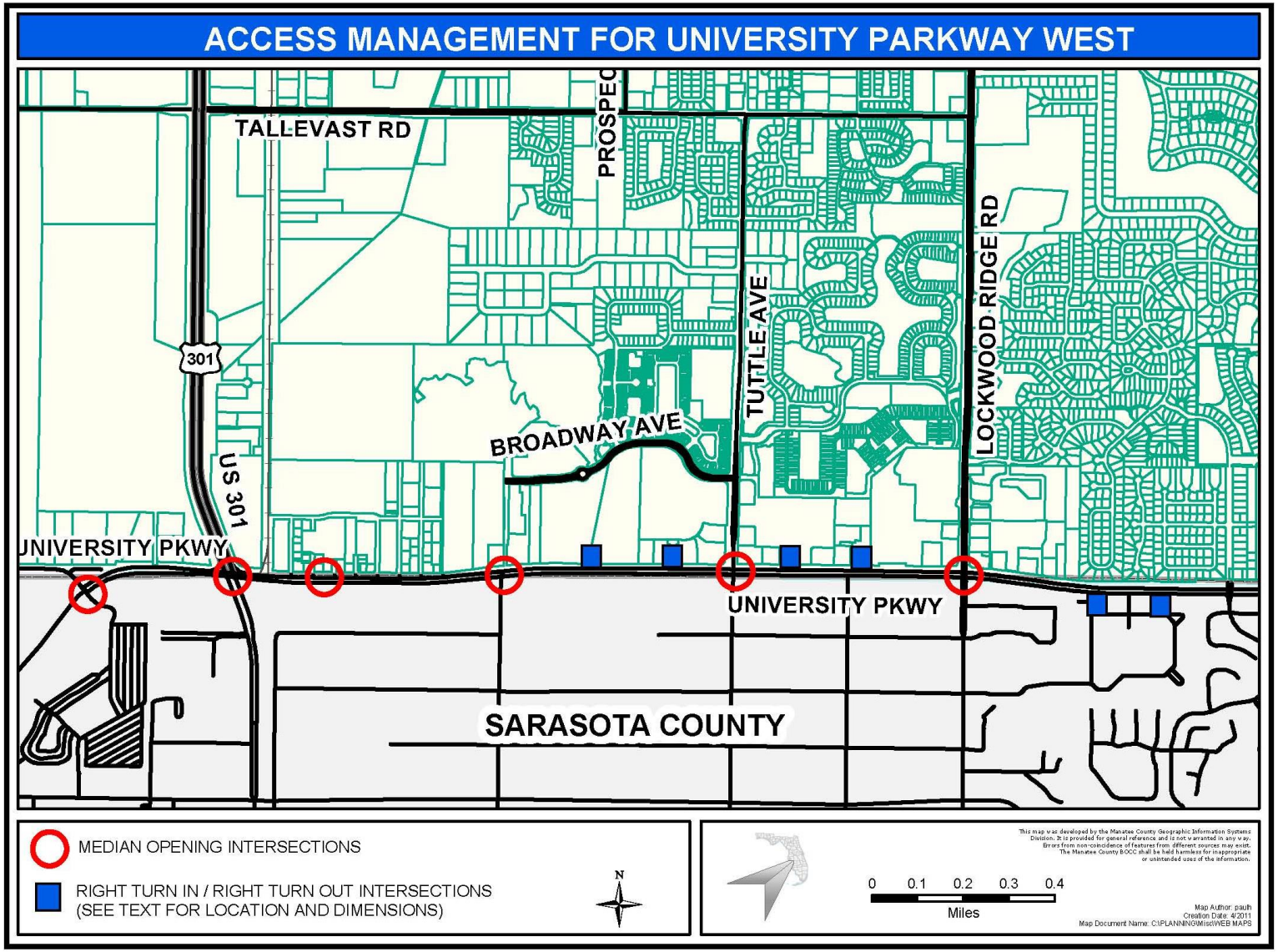

Figure T - 2: Access Management for University Parkway - East

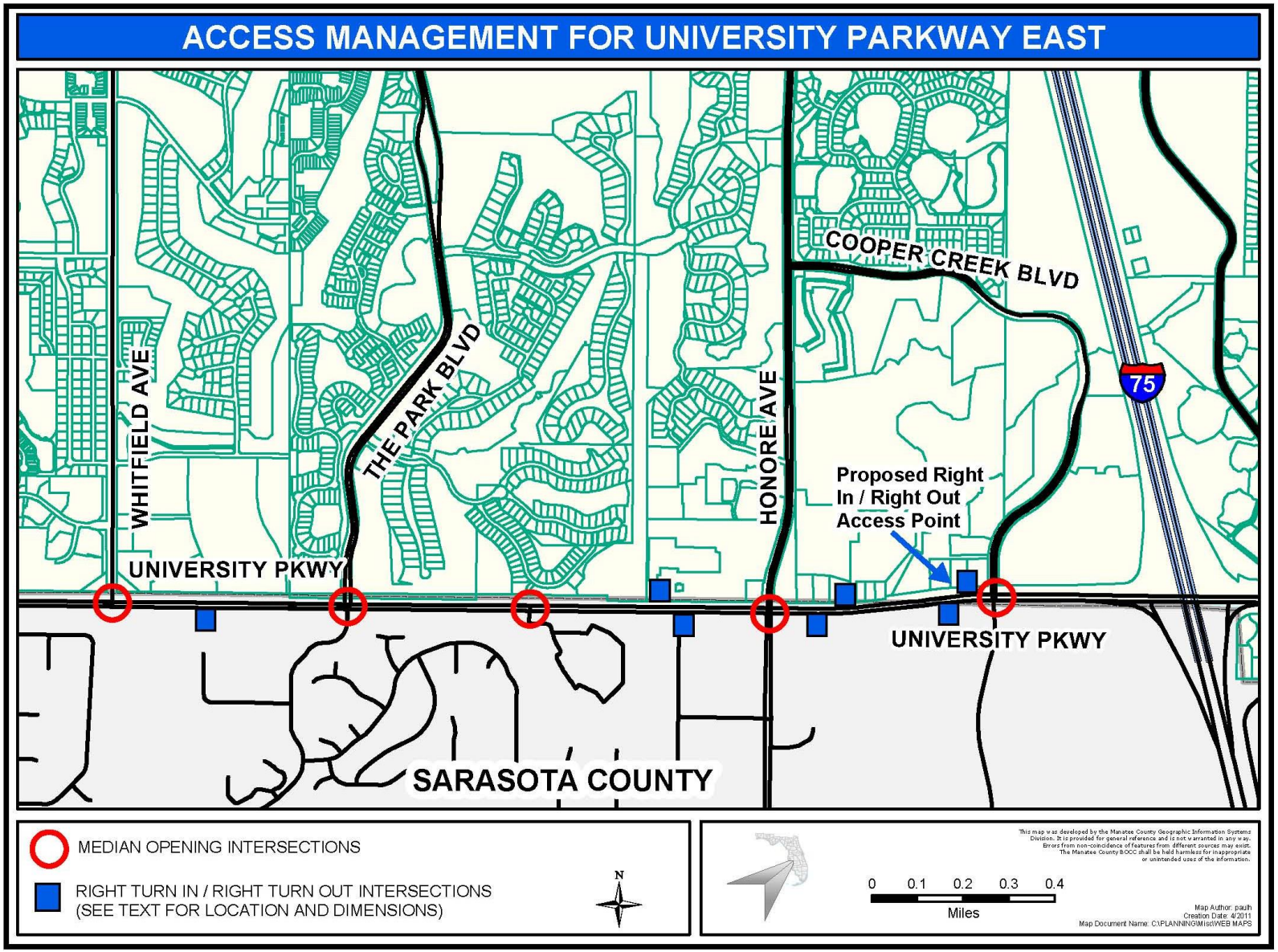

B. Right of Way Widths. Minimum street rights-of-way widths shall be as indicated on the Major Thoroughfare Plan, and as follows:

Table T - 1: Right-of-Way Minimum Widths

Street Type	Minimum Right-of-Way
Local Street (curb and gutter)	50 feet
Rural Road	84 feet
Cul-de-Sac and turn-around:	
Curb and Gutter	110 feet diameter
Rural Road	140 feet diameter

In some instances, a greater right-of-way width may be required by the Department Director in accordance with the Florida Department of Transportation standards.

C. Street Design Standards. Streets shall be designed according to the following standards:

(1) Streets shall be designed to intersect as close to right angles as possible. The approach to an intersection should be approximately at right angles for a minimum of one hundred fifty (150) feet on thoroughfares and arterials, and fifty (50) feet for minor residential streets. The maximum deviation from a ninety (90) degree angle at an intersection shall be fifteen (15) degrees.

(2) Within residential subdivisions, “” no intersection shall have more than four street approaches.

(3) Proposed new intersections along one side of an existing street shall, wherever practicable, coincide with any existing intersections of the opposite side of the street. Street jogs with center line offsets of less than one hundred twenty-five (125) feet crossing local streets and four hundred (400) feet crossing thoroughfares and arterials are prohibited. Intersections with thoroughfares and arterials shall be at least eight hundred (800) feet apart, unless turn lanes on the thoroughfare are provided.

(4) All streets shall have a minimum pavement width of twenty-four (24) feet. No curbing shall be used in calculating the required pavement width. Reductions of street pavement and right-of-way widths shall be considered by Department Director, as applicable, for projects within the overlay districts on a case by case basis.

(5) Curve radii on all streets shall be adequate for the design speed of the street in accordance with this manual and established engineering standards.

(6) Property lines and the back of curb lines at intersections shall be rounded with a minimum radius as shown in the following table.

Table T - 2: Minimum Radius by Intersection Type

Intersection Type	Minimum Radius[1]

[1] In some instances, a larger radius may be required by the Department Director in accordance with the Florida Department of Transportation standards.

Local Street with a Local Street	25 feet
Local Street and a Thoroughfare	35 feet
Thoroughfare with a Thoroughfare	50 feet

(7) All street and intersection grades shall be as specified in this manual. Where any street intersection design creates a traffic hazard by obstructing visibility, the developer shall remove the feature to the extent necessary to provide an adequate sight distances as stipulated in the established engineering standards.

(8) All public streets shall be constructed to Urban Street Standards, except that Manatee County's Rural Street Standards may be used for local streets which serve lots of one (1) acre or more.

(9) The street designation shall be in accordance with the requirements of the Land Development Code.

(10) Temporary street designation signs shall be erected at the time when building permits are issued in that portion of a development at all points where permanent signs will be required. Complete visibility of street designation signs shall be maintained by the developer until the temporary signs are replaced by permanent signs.

(11) A street **not** constructed to the standards contained in this Manual, nor listed in the official and approved inventory of County-maintained streets, may be allowed subject to certain conditions stated in the Land Development Code, including the execution of an affidavit and an agreement between the County and the property owner. The affidavit and agreement shall contain, at a minimum, acknowledgements by the applicant pertaining to the following:

a. That the County shall not be responsible for the maintenance of the street until the street has been dedicated to the County and accepted by the Department Director and the Board.

b. That the applicant shall bind himself, his heirs, assignees, grantees, purchasers for value and successors in interest, to participate in any project pursuant to a County initiated participation project for the construction of the roadway.

c. That the County assumes no liability or responsibility for any construction, improvements or work performed on the street by private individuals.

d. That the applicant shall record the affidavit and agreement with the Clerk of Circuit Court and shall mail notice of the filing and recording of the affidavit and agreement to any heir, assignees, grantee, purchaser for value or successor in interest upon the transfer of the real property or structure associated herewith within a reasonable time after such filing.

e. That the owner/applicant has provided construction drawings which meet minimum county standards.

D. Alleys. Where an alley is being proposed, a twenty-five (25) foot wide right-of-way shall be provided.

E. Access to Emergency Maintained Roads. The design and construction requirements stipulated in the Transportation Standards may be modified by the Department Director to suit the existing unimproved public rights-of-way conditions. The integrity of each construction element required by the County shall be consistent with the proposed public construction of the rights-of-way.

F. Ingress and Egress Easements. Ingress and egress easements are subject to the following:

(1) The easement shall serve one (1) lot only, which meets the minimum district size;

(2) An affidavit for maintenance being the sole responsibility of the applicant to both construct and maintain the easement in a condition suitable for daily travel by residents and access for emergency vehicles shall be recorded with the easement. . The affidavit shall also eliminate any County responsibility. This affidavit shall contain language stating that the owners of the two lots shall split any assessment fees for roads, water or sewer assessed to the frontage of the property. The lot with frontage shall not bear the entire cost of the assessment.

(3) The easement provides an adequate turnaround area for emergency vehicles which meets Manatee County Transportation Standards.

(4) The easement shall be constructed with a stabilized base and sub-base to be approved by the Department Director.

(5) All ingress/egress easements shall be recorded with the Clerk of Circuit Court in a manner to run with the land before issuance of building or access and drainage permits. The required affidavit shall also be recorded with the easement at this time. All such easements shall grant Manatee County exclusive vehicular access rights. The easement shall be reviewed by the Department Director and the County Attorney' prior to issuance of the access and drainage permit.

(6) Such ingress/egress easements shall not be allowed in established subdivisions or for use as a re-subdivision. Such easement shall not be allowed in the creation of a new subdivision.

(7) A subdivision shall not be required for the creation of access to one lot by easement, unless the creation of this lot is the third lot from the parent parcel.

(8) An affidavit shall be filed that grants access to the lot being split via the easement. These documents shall be provided prior to approval of the easement for access.

(9) No new lot shall be created by utilizing access by easement across any existing flag lot.

(10) The minimum required lot width shall be met for any lot proposed to have an access easement. If the lot does not contain this minimum frontage, then access by easement shall not be allowed.

(11) The access easement may cross only one (1) lot to provide access to another parcel. Those easements that cross more than one (1) lot shall not be permitted for this type of approval.

3.1.3 PRIVATE STREETS.

A. Intent. It is the intent of this section to provide requirements and general standards for all private streets and to ensure that adequate ingress, egress, emergency vehicle access, proper maintenance of streets, inspection, and the protection of public safety, health and welfare is provided to the general public.

B. General Requirements. All private streets shall meet the following requirements and conditions. The establishment of any new private street shall require that a subdivision plat be approved. Requests for modification of any requirements listed in this Section may only be granted in conjunction with a subdivision or planned development.

(1) Private streets are allowed in any planned development zoning district if approved as part of the planned development approval process. Private streets are allowed in any other zoning district upon approval by the Department Director.

(2) The land upon which an existing private street was constructed prior to the adoption of this Code shall clearly be identified either as a separate parcel or as an easement for highway purposes and duly recorded with the Clerk of Circuit Court. The land upon which a new private street in all new

subdivisions is to be constructed shall clearly be identified as a separate parcel of land to be owned under common ownership with all other parcels which are under common ownership and maintained by a property owners association, and duly recorded as same with the Clerk of Circuit Court.

(3) Under no circumstances shall a private street become public and listed in the official and approved inventory of County streets unless said private street is specifically approved by the Board for acceptance subject to public hearing process set forth in the Land Development Code; and that the subject private street shall meet all the current standards for public streets as set forth in this manual and the Land Development Code, prior to acceptance by the Board.

(4) The applicant for all private streets shall furnish the following documents in their entirety, as a condition of approval:

a. The applicant has submitted verifiable proof of the ownership of the lot or property to the Department Director;

b. The owner has executed and delivered to the Department Director, an affidavit and agreement between the owner and the County which complies with Subsection c below, and the affidavit and agreement have been approved by the Department. After acceptance by Department Director, the affidavit and agreement shall be recorded with the Clerk of Circuit Court. A copy of the recorded affidavit and agreement shall be on file with both the Environmental Management Director and the Planning Director. All costs associated herewith shall be borne by the applicant.

c. The affidavit and agreement shall contain, as a minimum, the following information:

i. An Acknowledgement by the applicant, which shall bind himself, his heirs, assignees, grantees, purchasers for value and successors in interest, that the County shall not be responsible for the maintenance of the street until the street has been improved or constructed to County standards and accepted by the Board;

ii. An acknowledgement by the applicant, which shall bind himself, his heirs, assignees, grantees, purchasers for value and successors in interest, to participate in any project pursuant to a County initiated participation project for the construction of the roadway;

iii. An acknowledgement by the applicant, which shall bind himself, his heirs, assignees, grantees, purchasers for value and successors in interest, that the County assumes no liability or responsibility for any construction, improvements or work performed on the street by private individuals; and

iv. That the applicant shall cause the filing and recording of the affidavit and agreement with the Clerk of Circuit Court and shall mail notice of the filing and recording of the affidavit and agreement to any heir, assignees, grantee, purchaser for value or successor in interest upon the transfer of the real property or structure associated herewith within a reasonable time after such filing.

d. The applicant shall provide an easement or other appropriate documentation signed by all property owners adjoining the property under the private street, granting access to each other, with the application for private street approval. Each property owner shall grant each other the right of ingress, egress and access across the private street. Upon approval, this agreement shall be recorded in the Public Records of Manatee County, Florida, by the applicant.

(5) The structural requirements for construction of all private streets including utilities, highway and stormwater components and systems shall adhere to the standards contained in this Manual, and be approved by the Department Director. .

(6) The minimum design considerations which shall be adequately addressed by the applicant's engineer for all private street applications not built to County Standards, and which shall be approved by the Department Director include:

a. Safe vehicular travel;

b. Structural stability of all construction;

c. Traffic standards as set forth in the Land Development Code;

d. Utility distribution, power, sewer, cable, potable water, stormwater and fire protection routing, location, sizing and inter-neighborhood ties;

e. Horizontal and vertical sight distances;

f. Emergency vehicle maneuverability and access;

g. Logical future extension of inter-neighborhood ties for streets and utilities. Private streets shall not be used for inter-neighborhood ties;

h. The entrance to the private street from the public street shall adhere to Section 3.1.2.C of this Manual for continuity of satisfactory highway design;

i. The visibility triangle requirements as set forth in Section 315 of this Manual;

j. A stormwater roadway system shall be provided to ensure that the street stormwater runoff does not flow onto adjoining property except into water courses or acceptable drainage structures with appropriate drainage flowage rights thereto; and

k. The minimum travel lane width for each lane shall be twelve (12) feet and a minimum of two lanes.

l. The private street shall not interfere with the completion of officially proposed County utilities, drainage, roads and other public facilities.

m. The private street shall be located, designed and buffered or screened, as necessary to protect adjacent properties of different ownership.

n. All private street applications shall be reviewed by the Department Director prior to approval.

o. A copy of the deed or other legal instrument which grants or provides the legal right to use the private street by the abuttors shall be recorded with the Clerk of the Circuit Court. A title opinion shall be furnished to the County indicating that the instrument provides legal access to all of the parcels which the proposed private street is to serve.

p. Street designation signage as required by this Manual and the LDC shall be provided by the applicant.

q. All lots, after approval of the private street application shall front on either a public or private street.

r. The minimum street width shall be fifty (50) feet.

s. Where interneighborhood ties are required by Manatee County, private streets shall not be approved.

C. Specific Design Requirements for Private Streets. The following sections include standards for two types of private streets that do not have to meet County Standards: Private streets in planned developments, and private streets serving five (5) lots or less. All other private streets must be constructed in compliance with County standards.

(1) Private Streets in Planned Developments. The design and construction shall adhere to the Planned Development standards set forth in the zoning chapter of the LDC and Sections 3.1.3.B(5) through (7) of this Manual. In addition, when the applicant proposes that the width of the private street or any element thereof, to be less than the required standards for public streets; the design must clearly reflect adequate, appropriate, and safe accommodations and space for all utilities, slopes, setbacks, drainage and highway design elements.

(2) Private Streets serving five (5) lots or less. Private streets serving a maximum of five (5) lots not located in a planned development shall be comply with the standards set forth in Section 3.1.3.B(6), items a, c through j, and l through q and s

a. The land shall remain zoned as it presently exists.

b. The street width identified as a separate parcel shall be at least fifty (50) feet, but in no case shall the pavement width be less than twenty (20) feet, based upon the standards contained in this manual.

c. The road surface and structural stability shall be reviewed on a case by case basis based upon potential traffic and usage of the road, length of the proposed road and proposed road design. The Planning Director may modify the paving requirement based upon the recommendation of the staff engineer using the standards contained in this manual.

D. Easement Conversion. All ingress/egress easements recorded with the Clerk of Circuit Court prior to May 4, 1981 may be converted into a private street by the process described in Section 3.1.3.B of this Manual. The conversion shall not require subdivision plat approval. The standards to which this street will be reviewed are dependent upon the type of street proposed, as described in Section C.C of this Manual.

3.1.4 ROAD CLOSURE PROCEDURES

Prior to the closure of a street or road, or any lanes of an existing road in unincorporated Manatee County, the Department Director must first review and approve the request. The following is an outline of the minimum requirements necessary to obtain approval. Any request may be subject to additional requirements based on the specifics necessary to serve the general public and insure public safety.

A. A detailed traffic control plan (TCP), clearly showing the altered route and signage package, must be submitted to the transportation dept. All traffic control must be in compliance with FDOT Index 600 thru 660 of the Florida Roadway Design Standards. Some plans may require combining indexes or being adjusted to meet field conditions. All revisions/changes to standards contained on standard index 600, pages 1 through 11, that are submitted as part of a TCP, require approval and must be signed and sealed by a qualified, registered Florida professional engineer.

B. Specific times, dates and locations the TCP is to be in operation must be submitted in a format approved by the Department Director.

C. A minimum advanced notice of 5 working days is necessary in all cases and additional time may be required depending on the impact of the closure. Any change to an approved TCP must have at least 5 days' notice.

D. The road closure is not to go into effect until all closure and detour signs are in place. All traffic control signs must be checked twice per day by the worksite traffic supervisor or a properly trained appointed representative.

E. The notification of all affected entities will be made by the Department Director after all requirements have been met.

F. Signs are to be covered or removed when not in use.

G. Road closures longer than one day will require advanced notification signs, that detail the length of the closure, a minimum of three days prior to the closing.

H. Failure to secure the proper approval and permits may result in the immediate cessation of work and the removal of all equipment, facilities and personnel from the right -of -way. Upon notification by Manatee County of deficiencies in the TCP or other matters involving traffic safety, the permittee shall immediately make improvements as directed by the county. Should Manatee County find conditions to be such that imminent danger is present, all work shall cease immediately and shall not resume until the conditions are corrected.

3.1.5 VISIBILITY TRIANGLES

The visibility triangle is the area around an intersection of two streets, or a driveway and a street, which must remain free of obstruction. Visibility Triangles shall be in accordance with Detail Sheets 600.7 to 600.9.

SECTION 3.2 TRAFFIC CONTROL DEVICES

3.2.1 SCOPE

Pursuant to the Florida Statutes, Chapter 316, also referred to as the Florida Uniform Traffic Control Law, all traffic signalization, signing, and marking in Manatee County shall meet or exceed the Florida Department of Transportation (FDOT) Roadway and Traffic Standards And Specifications (latest revision), the Federal Highway Administration's Manual On Uniform Traffic Control Devices For Streets And Highways (MUTCD)(latest revision), and the Manatee County Highway And Drainage Standards (latest revision).

The intended purpose of the traffic supplemental specifications as contained herein are to provide further clarification to the federal and state documents heretofore identified as well as setting the procedures for the preferred manufacture and installation of various traffic control devices in Manatee County.

When FDOT and Manatee County specifications differ, Manatee County specifications take precedence if they are more stringent. Manatee County traffic signal specifications will be supplied to the contractor by the Project Management Department.

3.2.2 PRIOR TO INSTALLATION.

A. Contact Manatee County Public Works Department before starting work, checking for updates on standards or other information.

B. One week prior to the beginning of the traffic signal installation, loop cutting, or turn on of a new signal, the contractor shall notify:

Manatee County Project Management Division.
1026 26th Avenue East
Bradenton, Florida 34208
Phone: (941) 708-7450

Manatee County Traffic Management Division.
1026 26th Avenue East
Bradenton, Florida 34208
Phone: (941) 708-7463

3.2.3 INSTALLATION AND MAINTENANCE

A. The prime contractor shall be responsible for the signal maintenance, timing and operation of any and all signals and signage from the commencement to the acceptance of the project (i.e.: existing loops cut, system communication terminated, lane or pavement modifications, pedestrian modifications). Manatee County will assist in providing existing system times when possible.

B. The signal contractor shall be available to respond to trouble calls twenty-four hours a day, seven days a week for the duration of the project. The prime contractor shall provide contact numbers for the signal contractor to the traffic management division at commencement of project. Furthermore, within two hours of notification or documented attempted notifications, the signal contractor shall be on site making needed repairs or modifications. Failure to meet the time requirements shall give the County, at its discretion, the right to request assistance from the manatee County sheriff's department to control traffic for the period of time until the contractor responds and makes the needed repairs, the cost for the Manatee County sheriff's office shall be the responsibility of the prime contractor.

C. The signal contractor shall be responsible for the maintenance and emergency repair work of all traffic signal school flasher, warning flasher, roadway lighting, count stations and any other traffic related device located within the construction zone. The transfer of responsibility shall occur on the first day of the contract.

D. The signal contractor shall notify the following agencies in writing within 48 hours of contract start date. The contractor shall give the location, start date, and emergency contact numbers for afterhours repairs.

Manatee County Traffic Management
2904 12th St. Ct. E.
Bradenton, Fl. 34208
(941) 708-7510

Manatee Sheriff's Office
515 11th St. W.
Bradenton, Fl. 34205
(941) 747-3011

Florida Highway Patrol
P.O. Box 20009
Bradenton, Fl. 34203
(941) 751-7646

E. Existing signalization shall remain in place to the extent possible, including vehicle actuation and pedestrian signal operation, and shall be used for maintenance of traffic as required.

F. All actuated phases shall be maintained during the project with the use of video or microwave detectors or the installation of loops within 48 hours from when they were damaged.

G. The contractor shall maintain communication between the intersection and the computerized signal system, via dedicated Verizon telephone lines through the duration of the project and for any additional costs related to maintaining communications. The county will clearly mark the Verizon service or county interconnect point prior to the contractor doing any work at the intersection. The contractor will contact the Public Works Department one week prior to any work which may cause disruption of phone or interconnect service to establish a temporary service point. The contractor will be responsible for coordinating such field modifications with Verizon or the traffic management division.

H. Prior to ordering materials, the signal contractor shall contact the traffic management division through the Public Works Department and verify current color codes to be used for signal and interconnect cable.

I. When a contractor is working on a signal in an intersection (installing conduit in the street, removing existing signal equipment) installing signal equipment, loops, home runs or turning on of new signals where a lane is closed, the project manager may require an off duty law enforcement officer to direct traffic. The hourly rate of pay for an off-duty law enforcement officer can be obtained from the local law enforcement office. The cost of the officer shall be the responsibility of the contractor.

J. Five working days prior to initial inspection of project the contractor shall furnish the inspector two complete sets of as-builts and IMSA inspection forms and the Public Works Department and traffic management division one complete set each of as-built plans, as-built plans shall clearly indicate the location of the installed poles, conduit, pull boxes, ground rods, loop windows and meg readings for both ground rods and loops.

K. Upon passing the final inspection the contractor shall send a written request to the Public Works Department and to the Public Works Department to transfer maintenance from the contractor to Manatee County. Manatee County shall respond within 5 working days to establish a time table for the transfer of maintenance responsibility.

L. Unless otherwise noted, all removed equipment except concrete poles shall be turned over to Manatee County and delivered to the traffic management division, located at 2904 12th street court east, Bradenton, Florida, 34208, as directed by the engineer. Concrete poles shall be disposed of by the signal contractor in areas provided by the contractor.

M. The contractor shall be responsible for contacting the local power company providing electrical power to determine if a service processing fee is required. Any fee shall be included as part of payment for the electrical power service assembly. The contractor shall be responsible for obtaining all permits and inspections of the electrical service.

N. The contractor shall contact the local power company for it's assistance in performing all necessary work under power lines at signal pole(s), such as the installation of span wire, signal cable, fiberglass insulators, and signal poles.

O. FDOT Bid item 639-1-ABC (electrical power service) shall include the cost of all special impact connection fees charged by local power companies for electrical service connection.

P. The location of utilities shown on the plans are approximate only. The exact location shall be determined by the contractor, via sunshine state one call of Florida, Inc., in coordination with underground and overhead utilities, a minimum of 48 hours prior to digging.

Q. The contractor shall notify the appropriate utility companies at least 72 hours in advance of pole setting operations where conflict with overhead electrical conductors is expected and in all cases where joint use poles are called for.

R. At locations where underground utilities are in close proximity to the signal pole foundation or conduit run, as determined by the engineer, the contractor will hand dig the first 48 inches of the hole for the pole foundation or the conduit run.

S. The contractor is to de-water the pole foundation excavation if the elevation of water is higher than the elevation of the pole base.

T. The contractor shall have an I.M.S.A. Certified level II (electronic or electrical) on the job site at all times while work is being performed. All signal installation technicians shall have a minimum of I.M.S.A. Level I certification.

U. All materials, equipment, and other contractor supplied items shall be installed and maintained according to the manufacturer's recommendation, unless specifically directed otherwise by Manatee County.

V. Contractor shall supply all material submittals to Manatee County transportation maintenance prior to construction for approval.

3.2.4 MAST ARM STANDARDS

A. Effective march 1, 1995, in conformance with FDOT mast arm policy, all new signals installed in Manatee County west of 1-75 shall be supported by mast arms with the signal head(s) vertically installed and rigidly attached to the mast arm, unless otherwise approved by the project engineer.

B. Mast arms shall be constructed of one continuous section up to 50' (15.24 m) in length and of a two section construction from 50' (15.24 m) to 1 00' (30.49 m) in length.

C. The elevation of the top of the mast arm base(s) shall be six inches (15.24 cm) above existing grade. If located directly behind sidewalk, at sidewalk grade.

D. Item 700-11-ABC (Electronic Display Sign), shall include sign assembly and mounting hardware only. All signs shall require block numbers.

E. Internally illuminated signs shall be rigidly attached to the mast arm as shown on the plans.

F. The cabinet shall be compatible with the Manatee County computerized traffic signal system, FDOT Bid item number 670-5-ABC (actuated solid state controller assembly). This cabinet shall include an ACP 340 surge protector. The cabinet shall have a "Manatee County" compatible communications interface panel installed and wired by the contractor unless directed otherwise by the engineer.

G. The controller cabinet base shall be at least 2' high and the same elevation as the center of the roadway or greater. The cabinet door shall open towards or parallel to the right -of-way line and away from traffic.

3.2.5 OTHER SPECIFICATIONS

A. Item 670-5-ABC (actuated solid state controller assembly), shall include additional cost of labor, concrete and other materials for the controller base, pad, and steps as required.

B. All local and master controllers shall be supplied with internal F.S.K. Assemblies, shall also include an external U.S. Robotics Sportster 33.6 fax modem (model 0459) or a Manatee County approved equivalent, unless otherwise specified. Local controllers shall include the necessary hardware and firmware for TBC and closed loop operation, unless otherwise specified.

C. When installing ground wire in controller cabinets, the copper ground wire shall not come in contact with the aluminum cabinet, except at the termination point.

D. The cabinet shall be installed with three 2” (5.0 BCM) spare conduits. These conduits shall be capped in the proper pull box.

E. The signal contractor shall size the electrical supply wire to prevent a voltage drop at the signal heads as specified in section 210-19 of the N.E.C.

F. The cabinet field wiring, including signal head wiring and lead-ins, (cables neutrals and spares) shall be identified for direction and or phase with clearly marked weatherproof tags. The proposed tagging system shall be in accordance with the FDOT’s standard specifications. White and white with a black will be used as a neutral only.

G. All conduits under roadways, driveways, and traffic bearing surfaces, shall be installed prior to installation of the roadway base and surface. These conduits shall be 2” (5.08 cm) minimum in diameter, unless otherwise specified in plans. All conduit runs shown on the plan are schematic and field adjustment may be necessary.

H. A spare 2” (5.08 cm) underground conduit run shall be provided for each signal pole. The conduit shall be capped in a pull box.

I. A manual push button cord and cabinet keys shall be furnished in all controller cabinets.

J. Bid item number 630-2-AB (conduit), shall measure as length of trench for multiple runs of conduit.

K. It should be noted that no test borings were made where conduit runs are to be installed by jacking or boring.

L. All electrical wiring, including roadway loop wire and shielded lead-in cable, shall comply with all appropriate provisions of the latest edition of the national electrical code published by the national fire protection association.

M. #14 XHHW pull wire shall be installed in all conduits. At least 2’ (60.96 cm) of pull wire shall be accessible at each conduit termination and secured in the pull box or place of termination.

N. All pull boxes and lids shall be traffic bearing and non-metallic type. Pull boxes shall be placed behind curb and gutter (where there is no curb and gutter, pull boxes shall be placed a minimum of 7’ from the edge of pavement).

O. The loop wire shall be I.M.S.A. 51-3 or equivalent type XHHW high density cross-linked polyethylene insulated wire, rated for 600 volts. Detector lead-in cable shall be I.M.S.A. 50-2 or equivalent.

P. Whenever more than two inductance loops are connected to the same detector, they shall be wired in series.

Q. All loops shall have individual lead-ins to the cabinet. Loop splices shall be crimped, soldered and shrink wrapped to FDOT Specifications.

R. No home runs shall be cut in the roadway. All home runs shall be in conduit.

S. Bid item number 665-1-AB (pedestrian detector), shall include the additional cost of labor and materials required for installation of a pedestrian signal sign; ftp-49. This sign shall contain international symbols and be mounted above each pedestrian actuated signal sign ftp-48.

T. All pedestrian signals shall be light emitting diodes (L.E.D.) with international symbol lens, unless otherwise specified.

U. All signal heads installed on mast arm poles shall be 12" L.E.D. Red, yellow and green balls and red, yellow and green arrows. All signal heads on span intersections will have 12" optical (full visibility) L.E.D. Red, yellow and green balls and red, yellow and green arrows.

V. The external color of signal housing shall be black. All signal heads shall have tunnel visors. All signals shall be cast aluminum with glass lenses.

W. All signal heads shall have polycarb louvered back plates installed, per the manufacturer's recommendations.

X. All cinch jones connectors will be removed. Signals will be wired directly to terminal in disconnect.

Y. All pedestrian push buttons shall be oriented as to comply with the American Disabilities Act (ADA).

Z. All concrete strain poles shall be installed with the proper rake specified by the manufacturer or engineer of record.

AA. All controller cabinet door diagrams shall reflect the current, correct data and documentation.

3.2.6 GROUND ROD INSTALLATION SPECIFICATIONS

A. General

(1) All signal poles, metal pedestrian poles, and electrical services must have a minimum of 20' of ground rod. Pole -mounted cabinets must have at least 50' of ground rod. All grounds shall be supplemented by additional ground rods as necessary to reach a measurement of less than 25 ohms to ground.

(2) Ground rods for poles, service, and pad shall be placed a minimum of 6' apart.

(3) Bond top and bottom spans to the bond wire in the pole and to the pole ground rod. If no bond wire is available, use a #6 THHN copper wire run inside the pole to bond spans together.

(4) All ground rod assemblies for poles, services, cabinets, and other related equipment shall be bonded together to form an intersection grounding system using #6 THHN bare copper wire.

(5) Final elevation; the upper end of the ground rod shall be 6" below ground elevation. Mark ground rod location with permanent marker such as an epoxied sticker located on the nearest curb, or provide as built drawings with the location of ground rods marked.

B. Material and Equipment

(1) Ground rod shall be copper coated steel 5/8" in diameter by 1 0' in length with threaded ends.

(2) Couplings shall be installed as recommended by the manufacturer and shall be threaded wrench tight.

(3) Grounding conductor must be #6 or large THHN bare copper.

(4) Connecting devices shall be non-corrosive split bolts, clamps, pressure connectors, or other approved means to ensure a positive connection.

(5) Megger, ground resistance tester, or other approved means will be used to acquire the ground rod resistance. A member of the traffic management division staff shall be present during the test reading.

C. Procedures

(1) Call sunshine state one call of Florida, Inc., a minimum of 48 hours before ground rod installation begins.

(2) Use an adapter on ground rods when driving to prevent damage to the threads.

3.2.7 SPAN INTERSECTION 12 CONDUCTOR

Terminal Block Number	Color Code	3 Section Main & Side	5 Section Main/ 3 Section Side	3 Section Main/ 5 Section Side	Main Protected	Side Protected
1	Red	Main Red	Main Red	Main Red	Main Red	Main Red
2	Amber	Main Amber	Main Amber	Main Amber	Main Amber	Amber Arrow
3	Green	Main Green	Main Green	Main Green	Main Green	Green Arrow
4	Black	Spare	Amber Arrow	Spare	Spare	Spare
5	Blue	Spare	Green Arrow	Spare	Spare	Spare
6	Red/ Black	Side Red	Side Red	Side Red	Red Arrow	Side Red
7	Amber/ Black	Side Amber	Side Amber	Side Amber	Amber Arrow	Side Amber
8	Green/ Black	Side Green	Side Green	Side Green	Green Arrow	Side Green
9	Black/ White	Spare	Spare	Amber Arrow	Spare	Spare
10	Blue/ Black	Spare	Spare	Green Arrow	Spare	Spare
11	White/ Black	Side Neutral	Side Neutral	Side Neutral	Side Neutral	Side Neutral
12	White	Main Neutral	Main Neutral	Main Neutral	Main Neutral	Main Neutral

3.2.8 MAST ARM WIRING CODE

A. Mast arm intersection 3 section requires 7 conductor (cables must be identified in cabinet).

Terminal Block Number	Wire Color Code	Field Assignment
1	Red	Red
2	Amber	Amber
3	Green	Green
4	Black	Spare
5	Blue	Spare
11	White/Black	Side Neutral
12	White	Main Neutral

B. Mast arm intersection 5 section requires 9 connector (cables must be identified in cabinet).

Terminal Block Number	Wire Color Code	Field Assignment
1	Red	Red
2	Amber	Amber
3	Green	Green
4	Black	Amber Arrow
5	Blue	Green Arrow
6	Red/Black	Spare
7	Green/Black	Spare
11	White/Black	Side Neutral
12	White	Main Neutral

3.2.9 PEDESTRIAN CROSSING WIRING CODE FOR MAST ARM

A. 5 conductor one direction (pedestrian call button shall be I.M.S.A. 50-2 or equivalent using the black as call and white as logic ground). Spares should be wire nutted in head.

Red	Don't Walk
Amber	Spare
Green	Walk
White/Black	Side Neutral
White	Main Neutral

B. 12 conductor two direction (pedestrian call button shall be I.M.S.A. 50-2 or equivalent using the black as call and white as logic ground). Spares should be wire nutted in appropriate head.

Red	Don't Walk (Main)
Amber	Spare (Main)
Green	Walk (Main)
Black	Spare (Main)
Blue	Spare (Main)
Red/Black	Don't Walk (Side)
Amber/Black	Spare (Side)
Green/Black	Walk (Side)
Black/White	Spare (Side)
Blue/Black	Spare (Side)
White/Black	Side Neutral
White	Main Neutral

3.2.10 VEHICLE DETECTOR LOOP INSTALLATION

A. Loops:

(1) All loop wires must be XHHW-I.M.S.A. specification 51-3.

(2) Cut straight lines.

(3) 2" minimum slot cover.

(4) Angle corners as shown in diagrams 509, 511 & 513.

(5) Center loops in lanes.

(6) Push wire down with non-metallic tool being careful not to damage insulation.

(7) Pull wire snug, but not overly tight at corners.

(8) Cut lead-in slot at a right angle to the lanes, no diagonal cuts across the Intersection shall be allowed.

(9) Reference FDOT specification for sealant, excluded steep asphalt.

(10) Preformed loops must be preapproved by the traffic management division.

B. Lead-ins/home -runs:

(1) Lead-ins shall be a continuous run from the far pull box into the cabinet.

(2) Only one loop shall be allowed per lead-in.

(3) A separate lead-in slot shall be used for each loop.

(4) XHHW lead-ins shall be used for each loop.

(5) All home-runs shall meet I.M.S.A. specification 50-2.

(6) No more than two belden lead-ins may be placed in same slot.

C. Pull boxes:

(1) Splices between the loop and lead-in shall be made only in pull boxes.

(2) All splices shall be crimped and soldered.

(3) Use FDOT approved water tight methods.

(4) Pull boxes must be a minimum of 7' from edge of pavement, if no curb is present. Pull box may be located directly behind a raised curb.

(5) All conduit shall be buried a minimum of 36" below grade, if in a traffic area or under a roadway.

3.2.11 STAND-BY GENERATOR CONFIGURATION

A. General Notes

(1) When specified, traffic controller cabinets shall be wired for auxiliary generator operation for use in periods of long power outages.

(2) The controller power panel shall contain a dual 40 amp circuit breaker assembly with a mechanical device to allow only one (1) circuit breaker to be set at any one time. The mechanical device shall require that both circuit breakers be placed in the off position before a transfer from one breaker to the other can occur.

(3) The controller cabinet shall have a power input connector located on the side of the cabinet, closest to the cabinet power panel. The connector shall be stainless steel with a screw-on protective dust cover; the dust cover shall be hinged to the connector.

(4) For purposes of standardization, the cabinet connector shall be a MARINCO 6371 E1 male, rated for 50 amps at 125 volts, 3 wire.

(5) The mating female connector shall be a MARINCO 6360CRN with MARINCO 7715CRN dust cover and locking ring.

(6) The female half of the connector need not be furnished unless specifically required by the plans and specifications.

(7) A tamper restraint red indicator light shall be placed on the outside of the cabinet, as shown on the plans, that will illuminate when the normal utility power is restored, and the cabinet is running on the stand-by generator.

3.2.12 UNINTERRUPTIBLE POWER SUPPLY SPECIFICATIONS FOR TRAFFIC CONTROL APPLICATIONS

A. Scope

(1) The uninterruptible power supply (ups) shall provide uninterruptible reliable emergency power to a traffic intersection control cabinet in the event of a power failure or interruption for a period of time designated by the agency. The transfer from utility power to battery power shall be seamless and shall not interfere with the normal operation of the traffic controller, conflict monitor or any other peripheral devices within the traffic control system. The ups system (which may also be specified as a battery back-up system or BBS) shall be comprised as noted below:

(2) The system shall be capable of providing power for full run-time operation for an intersection, flashing mode operation for an intersection and a combination of both full and flash operations. The unit shall have all the necessary control contact available (for details refer to item 2 in this specification) in order to allow the user to select the most suitable mode combination based on the specific implementation.

(3) The ups shall have a serial port interface available to allow user programming of certain operational parameters in order to ensure compatibility with the specific intersection control equipment as deployed. The serial port interface shall be a standard RS232 serial interface (D9 connector) compatible with a PC serial communications port and shall be mounted on the front of the ups unit.

(4) The system shall be designated for outdoor applications and meet the environmental requirements as is standard in the traffic industry. The temperature requirements that the ups shall conform to shall be:

a. UPS -37C TO +74C

b. Power Transfer Switch -37C TO +74C

c. Manual Bypass Switch -37C TO +74C

d. Batteries -37C TO +74C

B. Run-Time

(1) The uninterruptible power supply shall provide a minimum of (2) hours of full run-time operation for an intersection's active output capacity whether LED, incandescent or any combination of both lighting technologies.

(2) The UPS/BBS shall have both certification and approvals for electrical safety UL-1778, CSA-107.1, EMI immunity FCC class A.

C. Control Contact

(1) UPS shall provide the user with 5 sets of panel-mounted potential free contacts and be clearly labeled so as to identify the use of each contact.

(2) One set of contacts shall be energized whenever the unit switches to battery power. This set of contacts (NO, NC, & COM) shall be labeled or marked "ON BAT".

(3) The second and third set of contacts (NO, NC, & COM) shall be energized whenever the battery voltage approaches approximately 40% (user field programmable via RS232 interface) of remaining battery capacity. Contacts shall be labeled or marked "LOW BAT".

(4) The fourth and fifth set of contacts (NO, NC, & COM) shall be energized two hours after the unit switches to battery power. This feature can be enabled/ disabled via the RS 232 interface. Contacts shall be labeled or marked "timer".

D. Load Transfer

(1) The UPS system shall include a manual bypass switch so that ups field replacement can be on a "hot -swap" basis.

(2) An optional power transfer switch (PTS) shall be available to be used in applications where normal operation exceeds the maximum ups output capacity and a "red flash" back-up implementation is used.

E. Product Compatibility

(1) UPS/BBS shall be compatible with all of the following types of intersection control equipment for full operation, flash operation or a combination of such. Actual mode of implementation is achieved via usage of the control contacts and dependent on the specific equipment configuration supported at the intersection.

a. NEMA TS-1 controllers and cabinets

b. NEMA TS-2 controllers and cabinets

c. VMS (variable message signs)

d. Type 2070 controllers its cabinets HAR (highway advisory radio cabinets)

e. System sampling cabinets

f. System volume, occupancy, classification cabinets

(2) Complete ups system including batteries shall fit pedestal or base mounted cabinets specifically designed to house the ups, 4 each 1 100 AH sealed lead/acid batteries and PTS. The cabinet shall be fabricated from the same material as the controller cabinet and contain its own 100 CU. FT. Per minute, thermostatically control fan and filter.

F. Ups Switchover Characteristics-Full Field Programmability

(1) The ups switchover characteristics shall be field programmable in order to be compatible with the specific intersection control equipment deployed. The following programmable controls shall be available (factory default values shown):

a. Line detection-low line cut -off (100V */-3)

b. Line detection-low line return (105V +/-3)

c. Line detection-high line cut -off (130V +/-3)

d. Line detection-high line return (128V +/-3)

e. Return to line mode after re-qualification (128V +/-3)

G. Back-Feed and Other Protections

(1) UPS shall be equipped to prevent a malfunction feedback to the cabinet or from feeding back to the utility service per UL 1778, section 48 "back-feed protection test".

(2) UPS shall have lightning surge protection compliant with IEEE/ANCI C.62.41.

H. Mounting/configuration

(1) Mounting method shall be shelf mount, rack-mount, swing-tray mount or combination thereof.

(2) All necessary hardware for mounting (shelf angles, rack, shelving, harness, etc.) shall be included in the bid price for the UPS.

(3) External battery cabinets may be used to meet adequate environmental and physical requirements.

I. Functionality, displays, controls, diagnostics and maintenance

(1) The UPS shall include a display (status monitor) and/or meter to indicate current battery charge status and conditions.

(2) UPS shall be easily installed and replaced (complete turnkey system with all necessary hardware) and shall not require any special tools for installation.

(3) UPS shall include a reset able front -panel event counter display to indicate the number of times the ups was activated, and a front -panel hour meter to display the total number of hours the unit has operated on battery power.

(4) UPS inverter module shall include a serial port allowing field programmability of input/output voltage values, self-testing, communications and diagnostics. Software to retrieve data, troubleshoot and program the ups system shall be ASCII format and be included as a part of the system.

J. Battery system

(1) Individual batteries shall be 12V type and shall be easily replaced and commercially available off the shelf.

(2) Batteries shall be extreme temperature, deep cycle, sealed prismatic lead-calcium based AGM/VRLA (absorbed glass mat/valve regulated lead acid) batteries.

(3) Batteries shall be certified to operate over a temperature range of -25 degrees "C" to + 74 degrees "C".

(4) The batteries shall be provided with appropriate interconnect wiring and a corrosion resistant stationary or swing-out mounting tray and/or brackets appropriate for the cabinet into which they will be installed.

(5) Batteries shall indicate maximum recharge data and recharging cycles.

(6) Recharge time for the battery, from protective low cut -off to 80% or more of full battery charge capacity, shall not exceed twenty (20) hours.

(7) The battery system shall consist of a temperature compensated switch mode charger (-4mV/C/CELL, microprocessor controlled). It shall also include a high temperature cut-off point 50C +/-3 above which all battery charging operations will be suspended.

K. Service and warranty

(1) Manufacturer shall provide a two (2) year factory-repair warranty for parts and labor on the ups.

(2) Manufacturer shall have field service technicians trained in traffic control technology available, and that can be reached via a toll-free service line.

L. Electrical specifications

(1) Input specifications

a. Normal input voltage 120VAC, single phase

b. Input voltage range 100VAC TO 130VAC

c. Input frequency 60Hz (+/ -5%)

(2) Output specifications

a. Nominal output voltage 120VAC (875 watts) 2KVA (1500 watts)

b. Output frequency 60Hz (+/-5%)

c. Voltage wave form sine

d. Efficiency 95-97%

3.2.13 MATERIAL SPECIFICATIONS FOR SOLAR POWERED SCHOOL FLASHERS

A. General

(1) This specification describes the various components of solar powered school flashers to be used by the traffic signal section of Manatee County. The solar powered school flashers shall meet or exceed all of the specifications indicated below.

(2) System must be compatible with and programmable similar to Manatee County's existing pager programmable time switch system.

B. Solar panel array (53 watt)

(1) The solar panel array shall consist of one (1) or more solar panels. The number of solar panels required will be determined by the following:

a. Number and wattage of signal indications

b. Hours of operation per day

c. Number of days of operation per week

d. Average hours of sun per day (winter)

(2) Each solar panel shall be ultra-high efficient type made of superior quality encapsulation materials. Each individual solar panel shall generate a nominal 53 watts of power in direct sunlight at a typical operation voltage of 16.5 volts with an optimum current rating of 3.0 amps.

(3) Each solar panel cell shall be bypass diode protected for efficient operation in harsh or partial foliage covering. The current output of the solar panel shall not drop more than 10% with a 4”x4” area of the solar panel covered to simulate the effects of shadowing.

(4) The front surface of the solar panel shall be manufactured with low iron tempered glass front for strength and superior light transmission.

(5) Each solar panel shall be framed with a rugged anodized aluminum frame and a tough, multi-layered polymer back sheet.

(6) A weather resistant junction box shall be provided for connection of the wires to the cabinet assembly. The junction box shall be located such that each access can be achieved.

(7) The overall dimensions of each panel shall be approximately 40”Lx18”W and each panel shall weigh less than 10 pounds.

(8) The solar panel array shall be equipped with a mounting bracket for affixing the solar panels to the top of a 4” OD pedestal pole. The mounting bracket shall be a Pelco model AB-3010 TENNON MOUNT CLAMP KIT or approved equal.

C. 12DV solid state time switch system, pager programmable

(1) Purpose: this specification sets the minimum acceptable requirements, materials and workmanship for a solid state time switch that is programmable using existing pager technology.

(2) Pager programmable time switch

a. The time switch unit shall have a wireless pager module able to receive programs and commands generated by a time switch-programming device through a local pager service. It shall be compatible with commercial 900 MHz frequency range alphanumeric paging services using flex protocol. Time switch programming software shall be provided to set and reset the capcode and frequency in the pager module.

b. The pager module shall work as a radio modem for the time switch. When

c. The pager module receives a message it will pass the message to the time switch for decoding. All addressing (except capcooe), timing and on/off command decisions shall be made by the time switch and not by the pager module.

d. The time switch shall be capable of receiving and running the following programs via the paging network.

i. Default week plan - the default week plan is a seven-day program with up to 24 program steps for controlling the output relay of the time switch. The time switch stores the default week plan and automatically runs this plan when it is received over the paging network or when an alternate week or override plan expires. If the time switch receives a new default week plan over the paging network it will replace the old plan with the new plan and immediately start running the new plan.

ii. Alternate week plan - an alternate week plan is a seven-day program with up to 24 program steps for controlling the output relay of the time switch. An alternate week plan runs instead of the default week plan until the alternate week plan expires. The time switch shall immediately start running the override plan when it is received over the paging network. The time switch shall revert back to either the default or alternate week plan (whichever was running at the time the override was received) at midnight of the same day or if a page is downloaded that cancels the override plan.

iii. Override plan - an override plan is a one-day program with up to 24 program steps for controlling the output relay of the time switch. An override plan runs instead of the default or alternate week plan until the override plan expires. The time switch shall immediately start running the override plan when it is received over the paging network. The time switch shall revert back to either the default or alternate week plan (whichever was running at the time the override plan was received) at midnight of the same day or if a page is downloaded that cancels the override plan.

iv. Time set - the day-of-week, hour and minute of the time switch shall be set and reset over the paging network. When a time set page is received, the time switch shall immediately adjust its internal clock accordingly.

v. Setup time switch - the time switch shall accept a single page that will download all of the operating parameters to include addressing, day-of-week and time-of-day, default week plan and alternate week plan programming.

vi. If a time switch is being programmed for the first time using on-air addressing, the system shall download the new group and location address the day and time-of-day, the default week plan for the group and an alternate week plan for the group with a single page.

vii. If a time switch is being moved from one group address to another group address, the system shall download address change, the day and time-of-day, the default week plan for the new group and an alternate week plan for the new group with a single page.

viii. If programming a time switch without changing its preset address, the operating parameters downloaded will include day and time-of-day, the default week plan for the group and an alternate week plan for the group.

(3) Enclosure

a. The time switch unit shall be housed in an aluminum enclosure with a means for mounting to a suitable back plane. Mounting holes that provide a local pager service. It shall be compatible with commercial 900 MHz frequency clearance for at least a #1 0 screw are required. The mounting hole pattern of the enclosure shall be suitable for the pager programmable time switch.

b. The time switch shall not exceed 5.0”Wx8.0”HX2.0”D. Interface to the power line and/or to the flasher cabinet shall be provided by means of a terminal block capable of terminating wire sizes up to #14 AWG. The ac power inputs, if any, shall be protected with a fuse and MOV. DC power with a fuse only. A separate terminal point shall be provided for each pole of the relay, ac line, ac neutral ground, +12VDC and -12V common.

(4) Electrical

a. The time switch shall be capable of operating on either 12VDC +/-2VDC or an AC power source between 95 and 135VAC.

b. The AC & DC power supply must be an integral part of the time switch circuit board due to the fact that many flasher cabinets do not have ac power outlets.

c. A separate power supply module, similar to those used for calculators and battery chargers, is not acceptable.

(5) Power back-up system

a. A means shall be provided to maintain timekeeping and all programming when the line power source (120VAC or 12VDC) is lost. This back-up system shall maintain timekeeping and all programming for not less than 60 days at 25C when fully charged and shall go on line automatically upon failure of the power source. Upon resumption of power source, the unit shall automatically resume normal operation with the relay output either energized or de-energized based on the last program being run.

b. The device used for the back-up system shall be a rechargeable capacitor or non-volatile memory.

c. When the time switch is operating on the back-up system, the indicators and relay output shall be off to conserve back-up power.

(6) Manual override

a. The time switch shall be equipped with a push button switch that will allow a technician to manually activate and/or deactivate the relay output. The relay shall remain in the manual condition until the next program step of the default, week plan or override plan, whichever is running.

(7) Indicators

The time switch shall have minimum of four (4) LED indicators to display the following:

a. When the time switch has power applied and is operating.

b. When the time switch is in the process of receiving a page.

c. When the time switch has failed to receive a page after midnight Saturday.

d. When the output relay is energized or de-energized.

e. When a switch setting error has been made using switch addressing.

f. The group and location number when using dip switch or on-air addressing.

g. When the time switch is running a default week plan, alternate week plan or override plan.

(8) Time switch addressing

a. The group and location address in each time switch shall be programmable by use of dip switches or on-air over the paging network.

b. It shall be possible to program a unique address on each time switch board by setting two dip switches. One group of dip switches shall be used to set the group address (1-99) and another of dip switches shall be used to set the location address (1-99). This unique address will allow the operator at the computer to program any time switch individually or as part of a complete group. An LED indicator shall continuously display the group and location number once the dip address has been set.

c. It shall be possible to set and reset the group (1-99) and location (1-99) address on-air via the paging network. An LED indicator shall continuously display the group and location number once the on-air address his been set.

d. The operator shall have the ability to convert from using switch addressing to on-air addressing and back at any time. When converting from on-air to switch addressing, the time switch will retain the on-air address number.

e. Group and/or individual addressing programmed in the pager module is not acceptable.

(9) Program search back. When the time switch is a new default week plan, alternate week plan, day-of-week and time-of-day, or override plan, it shall initiate a search back routine to determine if the relay output should be on or off at the time the download is complete.

(10) Output relay. The time switch shall have a single pole double throw relay output rated at 15 AMPS resistive at 120VAC.

(11) Antenna. Each time switch shall be supplied with an external antenna shall have a minimum gain of 3db and shall be housed in PVC pipe with a Meyers Hub for mounting. The antenna shall have a minimum of fifteen feet coax cable to accommodate mounting the antenna at the top of the pole assembly. A BNC (or equal) connector shall be installed on the coax cable for connection to the time switch.

(12) Connector. Each time switch shall be equipped with a circular CPC type connector. The CPC connector shall have a pigtail assembly wired to a multi-position labeled terminal strip. The wire length form the CPC pigtail to the multiposition terminal strip shall have a length of six inches.

(13) Connector

a. The time switch shall be warranted to be free from defects in material workmanship for a period of one year from the date of installation. Any warranty service required shall be promptly performed at the manufacturer's facility or the manufacturer's authorized service agency. The purchaser will pay transportation costs to such service point and the manufacturer will pay those to return the unit by normal surface transportation means. If the time switch cannot be repaired within 60 days, a new replacement will be furnished.

b. Service information shall be available to the purchaser consisting of at least; schematics, parts locators and parts lists.

(14) Test and acceptance

a. The apparent low bidder shall be required to supply a complete working system to the agency for testing and evaluation. This working system shall include a computer preloaded with the software, a verification time switch unit, six-field time switch units and any other equipment or supplies necessary for the agency to adequately test and evaluate the system.

b. The bidder shall setup the computer, the verification time switch unit and the six-field time switch units at a location identified by the agency. The bidder will train agency personnel on how to program and operate the pager programmable time switch system. The agency will supply a phone line for the test. The bidder will make all necessary arrangements with a local pager carrier and be responsible for the cost of the pager carrier service for the duration of the test and evaluation. The test and evaluation will take up to 60 days at which time the equipment may be picked up by the bidder or shipped to the bidder freight collect.

c. Upon telephone or written notification, the bidder must deliver this equipment to the agency within 14 calendar days. Failure to comply with the above requirement will render the bid non-responsive.

D. Solar powered flasher cabinet assembly

(1) The intent of this specification is to outline the minimum acceptable design requirements for a flasher cabinet assembly wired for a compact time switch and a two (2) circuit 12 VDC flasher.

Each flasher assembly will be used to operate a warning device. Power for the flasher cabinet assembly shall be supplied by a 12 volt battery that is charged from the sun's energy.

(2) Flasher:

a. The flasher cabinet shall include a plug-in two (2) circuit 12 VDC flasher and base. The flasher shall be of all solid state construction and shall be rated at a minimum of 10.0 amps per circuit. The flasher shall utilize zero voltage turn-on and turn-off of current, thus eliminating electromagnet interference.

(3) Voltage and current meters

a. The flasher cabinet shall include a meter to indicate the voltage level of the battery and a meter to indicate the total current draw of the flasher assembly and a meter to indicate the output of the solar panel.

b. The flasher cabinet shall include a 10 AMP fuse to protect the load, and a 10 AMP fuse to protect the solar charging system.

(4) Automatic Sequencing Charger (ASC)

a. The flasher cabinet shall include an automatic sequencing charger (ASC). The ASC shall be 1 do% solid state and be designed for use as a battery charge regulator in photo voltaic (solar) energy systems.

b. The ASC shall be negative ground switching shunt regulator and shall be housed in an anodized aluminum chassis and encapsulated in a hard epoxy resin.

c. The ASC will allow maximum solar panel current to flow into the battery until the battery voltage reaches the charge termination set point. When the battery voltage drops to the charge resumption set point, the ASC will allow charging to resume.

d. The ASC shall have terminals to accept up to 12 AWG wire.

(5) Field terminal block

a. A barrier type terminal block shall be used to terminate all wires. The terminal block shall have at least eight (8) positions to terminate the following functions:

i. Solar panel +

ii. Solar panel -

iii. (not used)

iv. Battery +

v. Battery -

vi. Load-1 from the flasher

vii. Load-2 from the flasher

viii. DC common from flasher

(6) Cabinet

a. The flasher assembly shall be housed in a cabinet with the battery and fabricated of .125 inch sheet aluminum. The cabinet shall be weatherproof using a neoprene gasket and shall be supplied with a standard #2 lock and key. The outside dimensions of the cabinet shall be a

minimum of 26""Hx16"Wx9"D. The outside of the cabinet shall be the natural aluminum finish. One each 1/4" weep hole shall be drilled/installed in each bottom corner of the cabinet, with four louvered vents (two on each side) with screens.

b. Field wiring shall be accommodated by a copper connector capable of

c. Terminating wire sizes ranging from #6 to #14 AWG. The wire connectors shall be ILSCO model XT -6 or approved equal.

d. The flasher cabinet shall be supplied with appropriate hardware for mounting to a 4 inch OD pedestal pole using stainless steel banding U-bolts.

(7) Warranty

a. Each flasher cabinet assembly shall be warranted to be free from defects in material and workmanship for a period of one (1) year from installation.

b. Any warranty service required shall be promptly performed at the manufacturer's facility or the manufacturer's authorized service agency.

E. Signal assembly

(1) Signal assembly shall conform to the requirements of section 650 of the department of transportation supplemental specifications. Signal assembly shall be twelve inch, aluminum and painted black. Two each mounting brackets will be supplied and shall be Pelco #SE-S053 or equal. The assembly shall include a twelve inch, 12 VDC yellow LRB signal module which is approved for use by the Florida Department of Transportation, which shall fit into the 12" traffic signal housing without any modification to the housing.

F. Aluminum pole

(1) Aluminum pole to be a minimum 15 feet long by 4 inch O.D. brushed aluminum pole to have pre-drilled and rubber grommeted holes at the following locations:

a. 1 inch hole installed 99 inches from pole base

b. 1 inch hole installed 115 inches from pole base

c. 1 inch hole installed 180 inches from pole base

d. 1 inch hole installed 234 inches from pole base

e. 1 inch hole installed 234 inches from pole base

Pole will be furnished with top cap to provide water seal.

Note: items 1, 2 and 4 will be drilled in the same vertical line. Item 3 and 5 will be drilled 180 degrees opposite items 1, 2 and 4.

G. Battery

Battery to be 12 volt D.C.-gel filled, Power Sonic #PS121000NB with a minimum of 120 minutes reserve power. Battery size shall fit into the provided battery cabinet.

H. Breakaway base

Breakaway base shall be Pelco type, with collar or equivalent.

I. Documentation

Documentation, including parts manuals, operations manuals and installation instruction manuals, shall be supplied to the county with each delivery. Proprietary components are to be identified on the parts list along with the source of the proprietary parts.

1 - 53 watt solar panel array

1 - Time switch, pager programmable assembly

1 - Flasher cabinet assembly

1 - Battery cabinet

1 - 12" aluminum signal assembly

1 - Yellow LED signal module

1 - 4"x15' aluminum pole/min.

1 - 12 VDC gel filled battery

1 - Breakaway base/Pelco type or equivalent

1 - All brackets and hardware needed to assemble all components

3.2.14 GENERAL SIGNING AND MARKING NOTES

A. General notes

In general, all traffic signs facing the same direction of travel along a given section of roadway should have a minimum spacing of 100 feet between signs so as to increase driver awareness and recognition.

3.2.15 TRAFFIC SIGNING AND MARKING HARDWARE/MATERIAL SPECIFICATIONS

A. Traffic sign faces

(1) All stop, yield and school series signs shall be manufactured using 3M diamond grade reflective sheeting or approved equal.

(2) The following traffic signs may be manufactured using 3M engineer grade reflective sheeting or approved equal, unless otherwise specified:

a. All one way signs

b. All parking series signs

c. Pushbutton and walk guidance

d. Stop here on red sign

e. OM reflector series using the 9 dot raised reflectors

f. All warning signs, except the following:

i. Large arrow sign (48 inches by 24 inches)

ii. Stop ahead sign

iii. Advisory speed plate and supplemental legend

(3) All other traffic signs shall be manufactured using 3M hi-intensity reflective sheeting or approved equal, unless otherwise specified.

3.2.16 STREET NAME SIGNS (GROUND MOUNTED) HARDWARE/MATERIAL SPECIFICATIONS

A. Street Name Sign Blanks

(1) Blanks shall be domestic aluminum alloy, type 6061-T6, with a thickness of .080 and be treated by alodine 1200E process.

(2) Blanks shall be a minimum of 9 inches in height by the appropriate length from 30 inches to 48 inches in 6 inch increments.

B. Street Name Sign Faces

(1) The background shall be 9 inches in height by the appropriate length, manufactured with at least 3M hi-intensity reflective sheeting or approved equal, unless higher grades of sheeting are specified.

(2) The foreground shall be 8 inches in height by the appropriate length so as to maintain a 1/2 inch border around the sign face.

(3) Letter heights and series for street names, prefixes (when used), suffixes and block numbers (when used) shall be as follows:

a. The street name shall be 7 inch, B series, upper/lower case (such as Childs St. or Bentley Ave.) standard. A minimum size to 5 inch, B series may be used to accommodate unusually long or cumbersome names.

b. Prefixes and suffixes shall be 7 inch, B series, upper/lower case, Standard. Minimum sizes to 2 inch, series B, upper case may be allowed as noted above.

c. Block numbers shall be 2 inch, series B, unless otherwise specified.

C. Street Name Sign Manufacture (layout, assembly, etc.)

(1) Each street name shall be manufactured using two (2) aluminum street name sign blanks (figure 553-A provides an example for the 30 inch and the 36 inch blanks), mounted back to back on a galvanized steel twist bracket (figure 553-B), using pop rivets to secure the sign. The center holes shown in figure 553-A secure the street name sign blank back to back pair to the bracket and the end holes secure the blanks to each other for rigidity.

(2) In cases where numbers comprise the street name, such as 3RD ST, the street name sign shall be manufactured so that RD is as follows: 3RD St. in this (and similar situations), the RD shall be 2 inch, series B, upper case only.

(3) Street name sign blank lengths shall be determined by the number of letters and numbers in the street name as follows:

a. 1-6 letters - 30 inch

b. 7-8 letters - 36 inch

c. 9-10 letters - 42 inch

d. 11-12 letters - 48 inch

e. For 13 or more letters, letter size and series as noted above, may be adjusted to allow the name to fit on the 48 inch blank.

(4) In order to provide clarification as to which roadways in Manatee County are publicly maintained (public) and privately maintained (private), public roadways shall have a green background with white

letters, numbers and borders and borders and private roadways shall have a yellow background with green letters and numbers.

(5) Where names are used, the block numbers shall be included under the name.

3.2.17 STREET NAME SIGN INSTALLATION

In general, all street name sign assemblies are mounted on top of a standard galvanized U-channel post. In most cases, the street name sign assembly will be mounted in combination with a stop sign so as to reduce the number of sign fixtures in the field.

3.2.18 PARKING SERIES SIGNS

A. Residential, Commercial, and Industrial Areas

(1) The standard size for parking series signs (for example, "NO PARKING ANY TIME", "NO PARKING 7-8:30 AM, M-F", etc.) is 12 inches x 18 inches and shall feature arrows to define the extent of the regulated zones. The signs shall be erected at a 45 degree angle relative to approaching traffic.

(2) Spacing between successive parking series signs should be not less than 100 feet or more than 300 feet to assure adequate notification to the motorist of the regulated zone.

(3) where practicable and to reduce the amount of mounting fixtures, parking series signs may be combined with other signs such as speed limit signs, lane control signs (such as "right lane must turn right"), or school series signs. Inasmuch as parking series signs are mounted at a 45 degree angle relative to approaching traffic, the mounting fixture for the combined signs shall be a circular pipe-post as defined in the FDOT standard indices.

B. Rural areas

(1) The standard size of the parking series signs is 18 inches x 24 inches. The signs shall be erected perpendicular to the roadway facing the direction of travel.

(2) Spacing is subjective; successive signs need to be spaced as far apart as practicable to minimize over signing but close enough to facilitate motorist identification of the regulated zone.

3.2.19 SCHOOL ZONE SIGNING AND MARKING

A. Within the same school zone where multiple crosswalks are installed along the same roadway 400 feet or less apart, the "school" pavement legend, the school ahead sign, and (when used), the static school speed limit sign shall not be installed between the crosswalks.

B. Within the same school zone where multiple crosswalks are installed along the same roadway that are more than 400 feet apart, the "school" pavement legend, the school ahead sign and (when used), the static school speed limit sign shall be installed.

C. Along the same roadway, only one set of school speed limit flashers shall be installed. Additional static school speed limit signs may be installed as defined above in A and B.

D. The installation of reduced speeds at signalized crosswalks and intersections is neither recommended nor encouraged. However, in accordance with FDOT policy, topic number 750-01 0-027-H "establishing school zones and school crossings", effective May 3, 2006, upon a request from the local government, a reduced speed zone will be used at school crossings at signalized intersections at locations adjacent to or near school property if justified by an engineering study.

E. The school ahead sign with the "school" pavement legend shall be installed a minimum of 300 feet in advance of a school crosswalk for speeds up to 45 mph. FDOT standard index 17344 applies for speeds greater than 45 mph.

3.2.20 SPEED LIMIT SIGNING

A. Residential, Commercial, and Industrial Areas

(1) The speed limit sign shall be erected on the first property line if not less than 1 do feet from the extended curb line or edge of road of the nearest intersecting roadway.

(2) If the first property line is less than 100 feet, the speed limit sign shall be erected on the second property line, provided that the second property line is 300 feet or less from the extended curb line or edge of road of the nearest intersecting roadway.

(3) Where the first property line exceeds 300 feet, the speed limit sign may be erected not less than 1 do feet or more than 300 feet from the extended curb line or edge of road of the nearest intersecting roadway.

(4) If additional speed limit signs are needed to further remind motorists periodically of the applicable speed limit, such signs shall be installed beyond intersections as defined above. Spacing between successive speed limit signs should not be less than 1100 feet or more than 1500 feet along roads within residential areas. In general, for spacing of successive speed limit signs in commercial and industrial areas and/or along minor arterial roads or above, spacing should be as defined for speed limit signs along roads in rural areas.

(5) The speed limit sign shall be erected at least 100 feet from other traffic signs facing the same direction of travel. Examples include the regulatory end school zone sign followed by a speed limit sign at the end of a school zone or the no outlet warning sign placed at an intersection entering a residential area followed by a speed limit sign.

B. By Rural Areas

(1) The speed limit sign shall be erected as defined in A(1) through A(3) above.

(2) Additional speed limit signs installed along roads should be spaced not less than 2400 feet or more than 2800 feet between successive signs.

3.2.21 TRAFFIC SIGNAL AND STREET LIGHT INSPECTIONS

The following guidelines are for a comprehensive and complete inspection of all traffic control devices and the transfer of the maintenance responsibility from the engineer of record (E.O.R.) to Manatee County, as follows:

A. In accordance with no. 11 of the Manatee County traffic supplemental specifications, section 500, general signal notes, sheet no. 502.1, the E.O.R. shall provide Manatee County with two complete sets of as-builts and one complete set of IMSA inspection forms. These items will be required before an inspection is scheduled.

B. The E.O.R. shall request the scheduling of inspections by Manatee County project management inspections division, five (5) working days prior to the desired inspection date.

C. The E.O.R. shall follow all guidelines for acceptance procedures as outlined in section 611 of the 2007 FDOT standard specifications for road and bridge construction.

D. Where Manatee County inspection standards are more stringent, Manatee County standards shall be followed.

E. Within 24 hours after the initial inspection, Manatee County project management inspections division shall provide the E.O.R. a comprehensive punch list to include all items that require correction.

F. The E.O.R. and Manatee County project management inspections division after all punch list items have been corrected and schedule a re-inspection.

G. Upon re -inspection, Manatee County shall inspect all punch list items for correctness. If any punch list items are found to be unsatisfactory, the E.O.R.

H. Will be allowed to take immediate corrective measures (during the inspection).

I. If the item cannot be corrected immediately, the inspector shall cease the inspection and the E.O.R. shall be billed the total cost for labor and equipment provided by Manatee County during the inspection and for each inspection thereafter that punch list items are found to be unsatisfactory.

J. Upon passing the final inspection, the E.O.R. shall send a written request to Manatee County project management inspections division to transfer maintenance responsibility. Manatee county project management inspections division shall respond within five (5) working days to confirm the transfer.

K. If the transfer of maintenance has occurred within the 90 day warranty period, the E.O.R. shall remain responsible to correct any problem resulting from defective materials or workmanship, as described in section 611 of the 2007 FDOT standard specifications for road and bridge construction.

3.2.22 TRAFFIC SIGNS AND STREET MARKINGS INSPECTIONS

The following guide lines are for a comprehensive and complete inspection of all traffic control devices and the transfer of the maintenance responsibility from the engineer of record (E.O.R.) to Manatee County, as follows:

A. The E.O.R. shall request the scheduling of inspections by Manatee County project management inspections division, five (5) working days prior to the desired inspection date.

B. The E.O.R. and Manatee County shall follow all guidelines for acceptance procedures as outlined in Manatee County government specifications.

C. Where Manatee County inspection standards are more stringent, Manatee County standards shall be followed.

D. Within 24 hours after the initial inspection, Manatee County project management inspections division shall provide the E.O.R. a comprehensive punch list to include all items that require correction.

E. The E.O.R. shall notify Manatee County project management inspections division after all punch list items have been corrected and schedule a re -inspection.

F. Upon re-inspection, Manatee County shall inspect all punch list items for correctness. If any punch list items are found to be unsatisfactory, the E.O.R. will be allowed to take immediate corrective measures (during the inspection). If the item cannot be corrected immediately, the inspector shall cease the inspection and the E.O.R. shall be billed the total cost for labor and equipment provided by Manatee County during the inspection and for each inspection thereafter where punch list items are found to be unsatisfactory.

G. Upon passing the final inspection, the Manatee County project management inspections division shall send an approval/acceptance letter to the E.O.R.

SECTION 3.3 ROADWAY DRAINAGE

3.3.1 CURB & GUTTER.

Sheets 201.0 through 201.6 contain the standards for curb & gutter systems.

3.3.2 DRAINAGE GENERAL STANDARDS

A. Sheets 202.1 through 203.2 contain the standards for drainage system elements.

B. All referenced standards shall be latest revision.

C. Concrete shall be class "1" as specified in Section 345 of FDOT specifications

D. See section 425-2.2 "Mortar" of F. D.O.T. specifications.

E. Iron casting shall be as specified in section 962-8 of FDOT specifications. See section 425-5.

F. All reinforcement steel shall be as specified in sections 415 and 931.1 of FDOT specifications.

G. See F. D.O.T. specifications for gratings.

H. See F. D.O.T. specifications for section 125 "excavation for structures."

I. Precast top and bottom to be FDOT standards with minimum traffic bearing 8" thickness.

J. All stormwater pipe shall be installed behind the curb or edge of pavement and within the right of way and within the drainage easements.

K. The following is the drainage structure wall minimum thickness:

Precast	Block
Non-Traffic 6"	8" Either Way

Note: For drainage structures with pipe diameters up to and including 24".

6" precast walls are acceptable for traffic bearing.

Dimension Index

Pipe Size	Type	"C"	"D"	"E"	"F"	"G"	"H"
15"	RCP	2'8"	4'	5'	4'	5'4"	6'4"
12"X18"	RCP	2'8"	4'	5'	4'	5'4"	6'4"
18"	RCP	2'8"	4'	5'	4'	5'4"	6'4"
14"X23"	RCP	2'8"	4'	5'	4'	5'4"	6'4"
24"	RCP	3'4"	4'8"	5'8"	4'	5'4"	6'4"
19"X30"	RCP	4'	5'4"	6'4"	4'	5'4"	6'4"
30"	RCP	4'	5'4"	6'4"	4'	5'4"	6'4"
24"X38"	RCP	5'	6'4"	7'4"	4'	5'4"	6'4"
36"	RCP	5'	6'4"	7'4"	4'	5'4"	6'4"
66"	RCP	8'5"	9'9"	10'9"	4'8"	6'0"	7'0"

3.3.3 UNDERDRAIN.

Detail sheets 204.1 through 204.2 contain specifications for underdrain design and installation.

Corrugated polyethylene tubing with a filter fabric wrap, unless otherwise noted, may be used for underdrain applications associated with roadway construction providing the following specifications are met:

A. The corrugated polyethylene tubing shall meet the requirements of ASTM F-405.

B. The corrugated polyethylene tubing shall have a filter fabric sock meeting FDOT Spec. 948-3, latest revision. If perforations in pipe are less than 3/4", then filter fabric sock may be omitted.

C. The envelope material surrounding the tubing shall be crushed stone or washed shell. The thickness of the envelope material shall be equal to or greater than the diameter of the tubing, plus 12".

D. Corrugated polyethylene tubing shall not be acceptable under roadways.

E. Extra care shall be taken during placement to maintain proper line and grade, to be placed w/ slope of road.

F. A clean-out shall be constructed at the end of each run of underdrain. Maximum spacing every 100 feet.

G. Sod 3' around 18" conc. Square.

*Note: transportation director or his designee's approval is required for the use of flexible underdrain pipe.

3.3.4 STORM SEWER PIPES

A. Metal Storm Sewer Pipe

1. Shall meet requirements of section 430 and 943 of the FDOT's latest revision/update specifications for road and bridge construction and its supplement. All pipe shall be type 'A', fully bituminous coated.
2. Shall have gasketed water tight joints at all locations.
3. Shall have the project site tested by a certified lab for pH, resistivity, sulfates and chlorides. Tests shall be in accordance with Florida method of test FM 5-550, 551, 552 & 553 and submitted to the Public Works Department for review.
4. Shall have a minimum cover of 18".
5. Shall not be allowed within the road right-of-way or carry right -of -way runoff.
6. All stormwater pipe shall be installed behind the curb or edge of pavement and within the right of way.

B. HDPE Storm Sewer Pipe

1. HDPE shall meet current FDOT standard specifications.
2. Minimum cover - 9" (top of pipe to bottom of ridged pavement of driveway)
   - 15" (top of pipe to bottom of flexible base of driveway)
3. Sizes are limited to current FDOT standard specifications.
4. HDPE pipe is not allowed under roadway.

C. Fiber or Wired Reinforced Concrete. Pipe

1. FRCP shall meet current FDOT standard specifications.
2. Sizes limited to FDOT current standard specifications.

SECTION 3.4 RIGHT-OF-WAY LANDSCAPING

3.4.1 GENERAL

A. Right-of-way permits use must be obtained and landscape plans approved prior to commencing landscape installation. The landscape plan must be legible, to scale, and show the following: right-of-way locations and dimensions, north arrow, signs, all utilities (overhead and underground), existing vegetation to be retained, and all plant species specified, quantities, sizes, locations, and spacing.

B. Random soil sampling is encouraged prior to design and species selection.

C. Plant species must be adaptable to the site conditions. Nuisance, invasive species are not permitted (see Florida Exotic Pest Plant Council, Category I and II listings). Canopy tree species notorious for drooping branches shall not be specified next to traffic lanes and sidewalks. Shrub species notorious for encroaching into infrastructure shall not be specified.

D. Where canopy trees are proposed, sufficient space for large root zones must be available or provided.

E. All trees, shrubs, and palms must be quality grade Florida #1 or better (Florida Fancy) per the most recent edition of Grades and Standards for Nursery Plants, published by the Florida Division of Plant Industry of the Department of Agriculture and Consumer Services or a comparable quality rating system acceptable to the Public Works Department.

F. Planting operations for trees, shrubs, and palms shall follow the details contained herein on sheets 600.2 through 600.5, and shall be supervised by a “certified arborist”, International Society of Arboriculture or National Arborist Association.

G. Trees, shrubs, and palms shall not be allowed to encroach on the visibility triangle as shown on sheets 600.7 through 600.9. Unless waived by the department, the FDOT Roadway Design Standards, Index 546 and Index 700, latest revisions, shall be followed for sight distance at intersections and roadside safety requirement.

H. All landscapes permitted to be installed in rights-of-way shall be maintained per the “best management practices” (bmp) for landscape maintenance, horticulture and arboriculture as identified in the American National Standards Institute (ANSI) A300 standards and the international Society of Arboriculture.

I. The maintenance of right-of-way landscapes shall include at a minimum the following: annual pruning of trees and shrubs per bmp, semiannual pruning and fertilizing of palms (see details 600.4 & 600.5), fertilizing of trees and shrubs as necessary per bmp. Control of damaging insect attacks, notification to the department or Cooperative Extension Service of suspected plant diseases, and monthly removal of weeds and debris. Canopy tree pruning activities shall be supervised by a certified arborist. Dead and overly-stressed plant material shall be replaced with like species and size in timely fashion.

J. All turf utilized shall be properly mowed, edged, and maintained per season. Mulch shall be kept in a neat appearance, replenished as necessary, and removed from streets and gutters.

K. Any color of survey tape is approved, provided it does not conflict with the tape used on any utility locates

SECTION 3.5 UNDERGROUND IRRIGATION

3.5.1 GENERAL

A. Parties.

Owner:	Manatee County Public Works Department
Owner's Representative:	The individual County employee assigned to manage the design and construction of irrigation system
Landscape Architect:	The representative of the contracted or subcontracted firm preparing the irrigation design, details, notes, quantities, and procedures
Contractor:	The representative of the contracted or subcontracted firm that physically installs the irrigation system.

In instances where a Landscape Architectural firm is not retained, all references to Landscape Architect shall apply to the Owner's Representative.

B. Related Documents. Drawings and general provisions of the Contract, including General and Supplementary Conditions and Specifications sections, apply to the work of this section.

C. Codes and Inspections. The entire installation shall comply fully with all local and state laws and ordinances and with all established codes applicable thereto. The Contractor shall obtain all required permits, arrange for all necessary inspections and shall pay all fees and expenses in connection with same, as part of the work under this contract. Upon completion of the work, he or she shall furnish to the Owner, all inspection certificates customarily issued in connection with the class of work involved.

D. Description of Work. The extent of the underground irrigation is shown on the drawings.

Coordination: Coordinate and cooperate with other trades including but not limited to earthwork, landscape work, concrete work, masonry work, electrical and plumbing to enable the work to proceed as rapidly and efficiently as possible.

Guarantee: All work shall be guaranteed for one year from the date of final acceptance against all defects and malfunctions in material, equipment and workmanship.

(1) The guarantee shall also cover repair of damage to any part of the premises resulting from leaks or other defects in material, equipment and workmanship. Repairs shall be done at no cost to the Owner. The Contractor shall not be responsible for work damage by others. The guarantee shall state the name of the Owner; provide full guarantee terms, effective and termination date, name and license number of contractor providing guarantee, address and telephone number. It shall be signed by the chief executive of the Contractor and notarized. Manufacturers' warranties shall not relieve the Contractor of his liability under the guarantee.

(2) If, within ten (10) days after mailing of a written notice by the Owner to the Contractor requesting repairs or replacement resulting from a breach of warranty, the Contractor shall neglect to make or undertake with due diligence to make the same, the Owner may make such repairs at the Contractor's expense. In the case of an emergency where, in the judgment of the Owner, delay would cause serious loss or damage, repairs or replacement may be made without notice being sent to the Contractor, and the Contractor shall pay the cost thereof.

On-site Observation: At any time during the installation of the irrigation system the Owner's Representative or Landscape Architect, may visit the site to observe work underway. Upon request, the Contractor shall uncover specified work as directed by the Owner's Representative or

the Landscape Architect without additional compensation. Should the material, workmanship, or method of installation not meet the standards specified herein, the Contractor shall replace the work at his own expense.

Workmanship: All work done by the Contractor shall be installed by skilled personnel, proficient in the trades required, in a neat, orderly, and a responsible manner with recognized standards of workmanship. The Contractor shall have had considerable experience and demonstrated ability in the installation of sprinkler systems of this type. To demonstrate ability and experience necessary for this project, Contractor shall submit, to the Landscape Architect, the following:

I. List of three (3) projects completed in the last two (2) years of similar complexity to this project.

Description of projects shall include:

a. Names of Project

b. Location

c. Owner's name, address, and business phone number

d. Scope of work and contract amount

E. Submittals

(1) Product Data: Submit samples and manufacturer's technical data to the Landscape Architect including installation instructions for the underground irrigation system.

(2) Shop Drawings: If required, submit shop drawings to the Landscape Architect for the landscape irrigation system including plan layout details illustrating location and type of heads, valves, piping circuits, controls and accessories.

(3) Operations and Maintenance Manuals: The Contractor shall prepare and deliver to the Landscape Architect at substantial completion a minimum of three (3) hard cover binders with three rings containing the following information:

a. Index sheets stating the Contractor's address, and business telephone number, list of equipment with names(s) and address(es) oflocal manufucturers' representative(s).

b. Catalog and parts sheet on every material and equipment installed under this contract.

c. Complete operating and maintenance instruction on all major equipment.

d. Provide Owner's maintenance personnel with instructions for major equipment and show evidence in writing to the Landscape Architect at the conclusion of the project that this service has been rendered.

(4) Equipment The Contractor shall supply the Owner as part of this contract the following tools:

a. Two (2) sets of special tools required for removing, disassembling and adjusting each type of sprinkler and valve supplied on this project.

b. 2. Two (2) keys for each automatic controller.

c. 3. Two (2) quick coupler keys and two (2) matching hose swivels for each type of quick coupling valve installed, if required.

The above-mentioned equipment shall be turned over to the Owner by the contractor at the conclusion of the project before final inspection can occur, evidence that the owner has received material must be shown by the Contractor to the Landscape Architect.

F. Records Plans and Record Drawings. The Contractor shall maintain at all times an up-to-date record plan of the irrigation system as-built. The plan shall indicate the location and measurements, to the nearest foot, of all mainline pipes installed, including all automatic and gate valves, splice boxes, main line tees, elbows and fittings; equipment locations; sleeve locations; and the Contractor shall make such modifications to any notes and or details as appropriate to show the final installed condition of the overall system. The record plan shall be an original plan, drawn in ink on a good grade of tracing paper at the scale of the original plan as bid. Any sepia shall be used only for record plan drawings and shall be submitted to the County's Representative and Landscape Architect with the final pay request. It shall be kept up-to date during the installation of the system and shall accurately indicate the location of all equipment installed at that time. A copy shall be available on the site for inspection at all times.

G. On-Site Conditions.

(1) Inspection of the Site: The Contractor shall acquaint himself with all on-site conditions. Should utilities not shown on the drawings be found during excavations, the Contractor shall promptly notify the Landscape Architect for instructions as to further action. Failure to do so will make the Contractor liable for any and all damage thereto arising from his operations subsequent to discovery of such utilities not shown on the drawings.

(2) Protection of Property: The Contractor shall be responsible for the preservation and protection of all site conditions to remain. In the event damage does occur, all damage shall be completely repaired by the Contractor to its original condition. All costs of such work shall be charged to and paid by the Contractor.

a. Trenching: All trenching or other work under the limb spread of any and all plant materials to remain shall be done by hand by the Contractor or by other methods so that no limbs, branches or major roots are damaged in any way.

b. Buildings, Walks, Walls, and Other Property Shall be protected by the Contractor from damage. Open ditches left exposed shall be flagged and barricaded by the Contractor. The Contractor shall restore disturbed areas to their original condition as soon as practical.

(3) Private Utilities: The Contractor shall request the Owner, in writing, to locate any private utilities (i.e. electrical service to outside lighting) before proceeding with any excavation. If, after such requests and necessary staking, private utilities which are not staked are encountered and damaged by the Contractor, they shall be repaired by the Owner at no cost to the Contractor. If the Contractor damages staked or located utilities, they shall be repaired at the Contractor's expense.

The Contractor shall take whatever precautions are necessary to protect these underground lines from damage, and, in the event damage does occur, all damage shall be repaired by the Contractor. All costs of such work shall be paid by the Contractor unless other arrangements have been made.

3.5.2 MATERIALS

A. General. All materials and equipment shall be supplied by the Contractor and no substitutions shall be allowed without the prior written approval of the Owners Representative or the Landscape Architect. The Contractor shall inspect all materials and equipment prior to installation and any defective materials or equipment shall be replaced with the installed shall be removed and the proper materials and equipment installed in the proper manner.

B. Piping and Fittings

(1) General Provisions: All materials throughout the system shall be new and in perfect condition.

(2) Polyvinyl Chloride Pipe (PVC)

a. Laterals: Polyvinyl Chloride (PVC) pipe shall conform to the requirements of ASTM Designation D 2241, Class 1120 or 1220. All lateral piping shall be Schedule 40.

b. Main Line Under Pressme: Polyvinyl chloride (PVC) pipe shall conform to the requirements of ASTM Designation D 2241, Class 1120 or 1220, and Schedule 40 unless otherwise noted on the plans.

c. Pipe Markings: All PVC pipe shall bear the following markings:

i. Manufacturer' s name

ii. Nominal pipe size

iii. Schedule or class

iv. Pressure rating of P S.I.

v. NSF (National Sanitation Foundation) approval

vi. Date of extrusion

Copper Pipe: Copper pipe shall be seamless, type "K", drawn temper, ASTM B88.

(3) PVC Fittings:

a. All PVC Pipe and Fittings shall be Schedule 40 PVC with solvent weld joints and conform to the requirements of ASTM Designation D 2466 as furnished by manufacturer of pipe.

b. Fittings for Gasketed Pipe: For gasket pipe up to 8" and couplings up to 12", fittings shall be Schedule 40 rubber ring fittings with sealed bell spigot, o-ring, ring-tite mechanical joint, flanged or IPS threaded. All fittings for gasketed pipe shall be thrust blocked as per detail and of the size recommended by manufacturer of fittings.

c. All Fittings: Shall bear the manufacturer's name or trademark, material designation, size, applicable IPS. Schedule and NSF seal of approval.

(4) PVC Joints:

a. PVC pipe 3 inches and larger shall have provisions for expansions and contraction provided in the joints. All joints, except solvent weld and threaded joints shall be designated for push -on, make-up connection.

b. A push-on joint may be a coupling manufactured as an integral part of the pipe barrel consisting of a thickened section with an expanded bell with a groove to retain a rubber sealing ring of uniform cross section similar and equal to Johns-Manville R:int-Tite and David Meter Dav-Tite, or may be made with a separate twin gasketed coupling similar and equal to CertainTeed Fluid-Tite.

c. Joints in PVC pipe smaller than 3 inches shall be solvent welded in accordance with the recommendations of the pipe manufacturer using the solvent cleaner and welding compound furnished with the pipe.

(5) Copper Fittings:

a. For Copper Tubing: Type K copper, ASTM B88 ANSI B 16.22 wrought copper or cast brass, 150 psi recessed solder joint type fittings.

b. Dielectric Protection: Use dielectric fittings at connection where pipes of dissimilar metal are joined.

Pressure Pipe and Main Line Conduit through Buildings: Both shall be PVC Schedule 40 with Underwriters' Laboratories label. Conduit shall be twice the diameter of the enclosed pipe.

(6) Sleeves:

a. General: The location of sleeves shown on the drawings is schematic. The Contractor shall make any adjustments necessary to accommodate existing vegetation, utilities, or other conditions. Sleeving shall be a minimum of 18" below finish grade.

b. Sleeve Material: Sleeves shall be Schedule 40 PVC, conforming to the requirements of ASTM 1785. See irrigation plan for the size and location. If size is not shown, sleeves shall be installed to carry required piping and control wiring and shall be a minimum of 2 sizes larger than pipe carried by sleeve.

(7) Solvent Cement:

a. General: The Contractor shall provide solvent cement and purple primer for PVC solvent cement weld pipe and fittings recommended by the manufacturer. Pipe joints for weld solvent weld pipe shall be belled end. Pipe joints for gasketed pipe shall be integral ring type. Insert gaskets will not be accepted.

(8) Valves:

a. Gate Valves:

i. Gate valves for 3/4" through 2-1/2" shall be brass or bronze construction, solid wedge, I.P.S. threads, non-rising stem with wheel operating handle, for a continuous working pressure of 150 psi.

ii. Gate valves for 3" and larger: Iron body, brass or bronze mounted A WW A gate valves, with a clear waterway equal to the full nominal diameter of the valve, rubber gasket for a continuous working pressure of 150 psi. Valve shall be equipped with a square operating nut.

b. Quick Coupling Valves: Brass two-piece body designed for working pressure of 125 psi operable with quick coupler. The cover shall be a spring loaded self-closing type of cadmium plated cast iron, with a yellow thermoplastic rubber cover. The valve shall be opened and closed by a brass key of the same manufacturer having 3/4" outlet able to accommodate a 3/4" swivel hose ell. Key size and type as shown on plans.

c. Drip Valve Assembly: Type and size shown on drawings.

i. Wye strainer shall be of plastic construction, with 120 mesh nylon screen and 1/2" blow-out assembly.

ii. Control valve shall be two way, solenoid pilot operated, shall be made of synthetic, non-corrosive material shall be diaphragm activated and slow closing. The valve shall have a freely pivoted seat and seal retainer mounted without attachment to the diaphragm.

iii. After Control Valves have been installed, removable filters shall be installed in the box.

d. Pressure Reducing Valve: The valve shall be of plastic or brass construction with manual adjusting nut. It shall have a pressure regulating module capable of regulating outlet pressure between 15 and 100 psi (± 5 psi). Module shall have an adjusting screw for setting pressure and a valve connection for monitoring pressure.

e. Electric Control Valves:

i. Size and type shown on the drawings. Provide units with manual flow adjustment and manual bleed nut.

ii. The electric control valve shall be normally closed 24 volt A. C., 60 cycle solenoid actuated globe pattern. Valve pressure rating shall not be less than 200 psi.

iii. The valve body and bonnet shall be constructed of heavy cast brass, plastic or nylon, diaphragm shall be of nylon reinforced nitrile rubber. Solenoid coil shall be encapsulated in molded epoxy.

iv. The valve shall be actuated by a lower power, solenoid actuator.

v. The valve shall have a flow control stem and cross handled for regulating or shutting off the flow of water and a bleed screw for manual operation without electrically energizing the solenoid coil.

vi. The valve construction shall be such as to provide for all internal parts to be removable from the top of the valve without disturbing the valve installation.

f. Valve Boxes: Valve boxes shall be as specified on drawings.

(9) Irrigation Wiring:

Wiring for connecting the electric control valves to the controllers shall be type UF, 600 volt, single strand, solid copper with PVC insulation 4/64 inch thick. Use red for “hot” or lead wires, and white for the common wire. Size control wires to carry the required current as per manufacturer’s guidelines.

(10) Automatic Controllers:

a. General Provisions: Furnish a low voltage system manufactured expressly for control of automatic electric control valves of underground sprinkler systems. See the irrigation plan for controller specification.

b. Exterior Control Enclosure: Manufacturer’s standard weatherproof enclosure with locking cover, complying with NFPA 70 (National Electric Code).

c. Interior Control Enclosure: Manufacturer’s standard with locking cover, complying with NFPS 70.

d. Circuit Lighting Protection: The control station shall be protected with a lighting arrestor installed in the cabinet. A Rain bird LPP-K primary surge protector shall be installed by the Contractor on both legs of the 110 Volt power lines and a Rainbird LPV-K valve output surge protector shall be installed by the Contractor to protect the valve circuitry.

e. Electro-Mechanical and Computer Controllers: Controllers shall be of manufacturer’s size and type shown on the drawings.

f. Master controller shall be as indicated on the drawings and installed as per manufacturers recommendations.

(11) Sprinkler Heads:

a. Provide sprinkler heads as indicated on the drawings.

b. Rain Bird TM Adjustable-flow bubbler heads on flexible polyethylene pipe shall be used on all trees. If necessary, two or more bubblers may be required to ensure complete water coverage of the root zone of larger trees.

3.5.3 EXECUTION

A. Inspection Examine the areas and conditions under which the landscape irrigation system is to be installed and notify the Landscape Architect in writing of conditions detrimental to the proper and timely completion of the work. Do not proceed with the work until unsatisfactory conditions have been corrected in a manner acceptable to the Architect.

B. Preparation. Provide sleeves to accommodate piping under walks or paving. Coordinate with other trades and install to accurate levels prior to paving work. Cutting and patching of paving and concrete will not be permitted, unless absolutely necessary and approved in advance by the Owner's Representative. Maintain all warning signs, shoring, barricades, flares and red lanterns as required by the Safety Orders of the Division of Industrial Safety, FDOT Maintenance of Traffic Plans/permits (if applicable), and any local codes, ordinances, and/or Department policies and standards.

C. Trenching and Backfilling

(1) Excavation: Stake out the location of each run of pipe, sprinkler heads, sprinkler valves and isolation valves prior to trenching. Excavation shall be open vertical construction sufficiently wide to provide free working space around the work installed and to provide ample space for backfilling and tamping. Trenches for pipe shall be cut to required grade lines, and compacted to provide accurate grade and uniform bearing for the full length of the line. The bottom of trenches shall be free of rock or other sharp edged objects. Minimum cover shall be as follows:

a. Pipe and Wire Depth:

Pester Mainline 12" at top of pipe from Finish Grade

Lateral Piping (rotor) 12" at top of pipe from Finish Grade

Lateral Piping (pop-up) 12" at top of pipe from Finish Grade

Control wiring side of mainline

All lateral pipe fitting shall be installed in the direction of the plant (not up or backwards).

b. Vibratory Plow: Lateral piping may be installed through use of vibratory plow method if the Landscape Architect determines soil conditions satisfactory for this method of installation. Vibratory plowing does not relieve the Contractor of minimum pipe depths.

(2) Minimum Clearances: All pipelines shall have a minimum clearance of six inches from each other and from lines of other crafts. Parallel lines shall not be installed directly over one another. No lateral line shall be installed in the mainline trench.

D. Installation of Piping. PVC Pipe and Joints: Do not install weld pipe when air temperature is below 40 degree Fahrenheit. Installation shall be in accordance with the manufacturer's instructions.

(1) Only the solvent recommended by the pipe manufacturer shall be used. All PVC pipe and fittings shall be installed as outlined and instructed by the pipe manufacturer, and it shall be the Contractor's full responsibility to make arrangements with the pipe manufacturer for any

assistance that may be necessary. The Contractor shall assume full responsibility for correct installation.

(2) Flexible Plastic Pipe: Snake pipe in trenches as much as possible to allow for expansion and contraction. Insert fittings into the pipe up to the stop ridges.

(3) 3. All pipe to be laid side by side in trench, not on top of each other.

E. Backfilling Procedures. Initial backfill on PVC lines shall be acceptable fill material, free of foreign matter. Existing and proposed plant locations shall take precedence over sprinkler and pipe locations. Coordinate the placing of trees and shrubs with the routing of lines and final head locations.

(1) Backfill and Compaction: Do not backfill in freezing weather except with the written approval from the Landscape Architect. Leave trenches slightly mounded to allow for settlement after the backfilling is completed. Clean the site of the work continuously of excess waste materials as the backfilling progresses, and leave in a neat condition. No trenches shall be left open for a period of more than 48 hours. Protect open trenches as required.

Carefully backfill excavated materials approved for backfilling, consisting of earth, loam, sandy, clay, sand, and other approved materials, free of rock and debris over l" in size. Backfill shall be compacted to original density of surrounding soil without dips, sunken areas, or irregularities.

Conform to Section 02200 requirements for methods and required compaction percentages.

Hand place the first 6" of backfill (or to top of pipe) and walk on so as to secure the position of the pipe and wire. No wheel rolling will be allowed. Remove rock or debris extracted from backfill material and dispose of off-site. Fill any voids left in backfill with approved fill material.

F. Valves

(1) Isolation Valves: Shall be sized corresponding to adjacent pipe size. Specified valve boxes shall be installed flush with finish grade in such a manner that surface forces applied to their exposed area will not be transmitted to the piping in which the valve is installed.

(2) Gate Valves: Shall be installed where shown on the drawings. See details.

(3) Quick Coupling Valves: Shall be installed on the mainline pipe in the areas shown on the drawings. The connection between the mainline and quick coupler valve shall be with a threaded pipe and a triple swing joint.

(4) Electric Control Valves: Shall be installed in specified valve boxes. The valve shall have 6" of 3/4" pea gravel installed below the bottom of the valve. The valve shall be connected to the mainline as shown in the details. If the valve box does not extend to the base of the valve, a valve box extension shall be installed. Electric control valves shall be installed where shown and grouped together where practical. Place no closer than 12 inches to walk edges, buildings and walls. Adjust the valve to provide flow rate or rated operating pressure for each sprinkler circuit.

G. Conduit and Sleeves. Conduit and Sleeves for Control Wiring and Main/Lateral Pipe: Provide and install where necessary and as indicated on the drawings. Coordinate installation of sleeves with work of other discipline.

H. Controls. Connect electrical control valves to controllers in a clockwise sequence to correspond with station settings beginning with Stations 1, 2, 3, etc. Automatic controller shall be provided and installed as noted on the drawings. See electrical drawings for connection to power source.

Adjustment and Coverage of System: Coordinate pressure testing with adjustments and coverage test of system so both may occur at the same time. Balance and adjust the various components of the system so that the overall operation of the system is most efficient. This includes a synchronization of the controllers, adjustments to pressure regulators, pressure relief valves, part circle sprinkler heads, and individual station adjustments on the controllers.

I. Cleanup. Remove from site all debris resulting from work of installation of the irrigation system.

J. Control Wire. Control wiring between the controller and electric valves shall be buried in mainline trenches or in separate trenches. Electrical connections at each valve will allow for pigtail so that the solenoid can be removed from the valve with sufficient slack to allow ends to be pulled 12" above ground for examination and cleaning. An expansion loop shall be provided at every valve at 100'o.c. The expansion loop shall be formed by wrapping wire at least eight times around 3/4" pipe and withdrawing the pipe. The wire shall be color coded as specified, bundled and taped every ten feet. The wire shall be laid in the trench prior to installing the pipe, being careful to install the wire beneath and approximately 6" to the side of the main pipe line. Electrical connections to electric control valves shall be made with Rainbird Pen-Tite connectors or approved equivalents.

K. Connection to Water Source. Connect the irrigation system to the water source specified on the Irrigation Plans and Irrigation Scale.

L. Sprinkler Heads

(1) General Provisions:

a. Sprinkler heads shall be installed as detailed on the drawings.

b. Spacing of heads shall not exceed the maximum indicated on the drawings (unless directed by the Landscape Architect). In no case shall the spacing exceed the maximum recommended by the manufacturer.

(2) Head Types:

a. 6 inch Pop-Up Rotary Sprinkler heads: Shall be installed on 18" lengths of flexible polyethylene pipe and be set with top of head flush with finish grade. Heads in turf areas shall be installed with a green concrete donut.

b. Spray Pop-Up Sprinkler Heads: Shall be installed and set with top of head flush with finish grade. Heads shall be installed on flexible polyethylene pipe. Set heads so that spray pattern is not interrupted by plant stems or foliage.

c. Shrub Heads: All shrub heads shall be mounted on PVC risers and adjusted to 3" taller that the height of adjacent plant material. Paint risers black or dark green.

d. Drip Emitters: Type indicated on drawings. Install emitters in accordance with the drawings.

e. All trees shall be irrigated by adjustable-flow bubblers attached to flexible polyethylene pipe in such a manner that the entire root ball becomes saturated. Larger trees may require two or more bubblers to accomplish this objective.

M. Completion

(1) Flushing: Before sprinkler heads are set, flush the lines thoroughly to make sure there is no foreign matter in the lines.

(2) Flush the main lines from dead end fittings for a minimum of five minutes under a full head pressure.

(3) Testing: Notify Landscape Architect and Owner forty-eight (48) hours in advance of testing. Irrigation system shall be visually inspected, zone by zone, by the Owner and Architect to insure proper operation of all irrigation materials.

SECTION 3.6 FIRE LANE MARKINGS

3.6.1 DESIGN AND LOCATION OF SIGNS AND MARKERS.

A. The owner shall maintain the signs and markers designating the fire lane in a legible condition. Upon notification, signs and markers shall be replaced within ten (10) working days.

B. The design and location of the signs and markers shall be recommended by the Fire Chief and/or Fire Marshal. Additionally, all signs shall meet the requirements as set forth by the Florida Department of Transportation Traffic and Design Standards.

C. All fire lanes shall have a minimum width of twelve (12) feet.

D. All fire lanes shall be completely outlined with yellow traffic paint, by a stripe of four (4) inches minimum width; also, diagonal striping, four (4) inches wide, spaced ten (10) feet on center shall be provided throughout the area within the fire lane. For one way travel areas, the forward end of the diagonal striping shall be in the direction of travel. If the fire lane is partially delineated by curbing, the entire curbing shall be painted traffic yellow and shall constitute a stripe.

E. Pavement marking shall have the words “No Parking Fire Lane” painted in yellow traffic paint, in block letters of no less than ten (10) inches in height with a minimum two (2) inch stroke facing each direction of travel within the fire lane to be spaced a minimum of every fifty (50) feet within the fire lane.

F. All fire lanes shall be posted with signs on the curb or side of fire lane immediately adjacent to the building or structure bearing the words “No Parking Fire Lane” or the graphic symbol of a blocked “P” with the words “Fire Lane”. Said signs shall face each direction of travel within the fire lane and shall be spaced a minimum of every fifty (50) feet within the fire lane.

G. Pavement markings and posted signs shall be alternately placed so that within every twenty-five (25) feet either pavement marking or posted sign shall be visible.

SECTION 3.7 DRIVEWAYS

3.7.1 GENERAL STANDARDS

A. Driveways shall be constructed in accordance with the following standards and the adopted construction details included at the end of this section. As a minimum, all driveways located along paved streets shall be provided and maintained with a smooth, dustless surface from the edge of the road pavement to the right-of-way line.

B. Complete apron, including sidewalk, is to be 6" reinforced concrete (3,000 psi). See section 3.8 "sidewalks."

C. 1/2" thick fiberboard expansion material is to be placed between the curb and the apron. Material shall meet the requirements of AASHTO M153 OR AASHTO M213.

D. Catch basins, when required, will be constructed in compliance with Section 3.3, Detail Sheet 202.0.

E. Driveways constructed of brick, stone, or other semi - permanent material (limestone, shell and similar materials are not allowed) must be placed upon a compacted base of such thickness so as to equal a combined 6" of base and surface material or per manufacturer's specifications, whichever is more stringent. These drives must be maintained and repaired by the abutting property owner. No expansion joint is required.

F. See Floodplain Management regulations in Part 2 of the Public Works Standards Manual (Stormwater Management Design) and in the Manatee County Land Development Code.

G. All referenced standards shall be latest revision.

H. All stormwater pipe shall be installed behind the curb or edge of pavement and within the right of way and within drainage easement.

'NOTE: For complete driveway details, see FDOT Design Standards, latest edition, Index 310, Sheets 1 & 2 and Index 515, Sheets 2 through 6.

3.7.2 DRIVEWAY STANDARDS.

No permit shall be issued except in conformance with the following requirements; provided, however, the Department Director may increase the distance between driveways to the extent necessary to assure safe and efficient ingress and egress to a lot, based on existing roadway widths and Florida Department of Transportation (FDOT) standards.

A. Minimum Distance From Intersections. Where a site occupies a corner of two (2) intersecting streets, the driveway entrance or exit shall be as remote from the intersection as possible. Driveways shall not intersect a street corner radius, nor be closer to the intersection of extended street lines than provided in **Error! Reference source not found.**.

Table T - 3: Minimum Distance from Intersections

Principal Use of Lot Serviced	Highest Classification of Intersecting Streets	Minimum Required Distance (feet)
Residential	Arterial	60
	Major Collector	40
	Minor Collector	30
	Local	30
All other Uses	Arterial	75

Principal Use of Lot Serviced	Highest Classification of Intersecting Streets	Minimum Required Distance (feet)
	Major Collector	60
	Minor Collector	50
	Local	50

B. Minimum and Maximum Driveway Width. Driveways for residential zoned lots shall not exceed twenty-four (24) feet in width at their intersection with the lot line, unless approved by the Department Director. Driveways for non-residential zoned lots shall not exceed thirty-six (36) feet in width at their intersection with the lot line. The minimum driveway width in any zone shall be twelve (12) feet.

C. Maximum Number of Driveways. Except for agricultural zoned property, and lots in excess of five (5) acres, there shall be no more than two (2) driveways from any project, fronting on a single street. In the case of a corner lot fronting on two (2) streets, no more than a maximum of three (3) driveways shall be allowed for the project. In the case of a project abutting three (3) roadways, a maximum of four (4) driveways shall be permitted for the project. Each project shall have a separate access to a street, except as stipulated under Section **Error! Reference source not found.** below. The Department Director shall have the authority to approve an increase or decrease in the number of driveways due to design and safety considerations.

D. Minimum Distance Between Driveways. No driveway shall be closer to another driveway, whether on the same or adjoining lots, than as provided below, nor shall any driveway be closer to a lot line, measured along the street line, than one-half (½) the distance provided below, unless the driveway serves the adjoining lot as well. A cooperative driveway for two adjoining contiguous lots may be approved upon submission of recorded easements to the Department Director. Based on a review of the location, traffic and other site conditions, the Department Director will either approve or disapprove the request.

(1) For all non-residential and non-agricultural uses, the minimum requirements shall be as shown in **Error! Reference source not found.**:

Table T - 4: Minimum Distance Between Driveways

Street Classification	Distance Between Driveways
Arterial	40 feet
Major Collector	30 feet
Minor Collector and all other roadways	25 feet

(2) All driveway entrances and exits shall be located to afford maximum safety for traffic, provide for safe and convenient ingress and egress at the site, and minimize conflict with the flow of traffic on and off the site.

(3) Driveways should intersect the road at an angle of as near ninety (90) degrees as site conditions will permit. In no case shall the angle be less than sixty (60) degrees measured from the roadway.

(4) Driveway entrances shall not be utilized to convey stormwater from on-site to the right-of-way, except for single-family detached and attached dwellings, and duplex dwellings.

E. Vehicular Use of Right-of-Way Shoulders Prohibited. Except for the approved driveway entrance and exits, the area between the edge of a street, road or highway and the property line shall not be used for vehicle maneuvering or parking.

F. Stacking Lanes, Local Frontage Roads. Where deemed necessary by the Department Director to prevent traffic hazards or congestion, stacking lanes adequate to accommodate maximum queuing of vehicles turning into the subject driveway shall be provided in accordance with the standards contained in this Manual. A local frontage road may be required in lieu of any necessary stacking lanes.

G. Measurement. Measurement of driveway width or spacing shall not include any necessary corner radii, for turning movements.

,

SECTION 3.8 SIDEWALKS

3.8.1 GENERAL REQUIREMENTS

A. Sidewalks shall meet the standards contained in the Land Development Code, this section and detail sheets 301.1 through 302.3.

B. Sidewalk shall be constructed a minimum of 4" thick, 3000 psi concrete. Where sidewalk bisects a driveway, the minimum shall be 6" of class I concrete reinforced with 6"x6" #10 wire mesh. See detail sheets 101.2 and 101.3.

C. A minimum (5) foot wide sidewalk shall be installed along the north and west sides of all new local streets which are constructed in conjunction with a new residential development. A sidewalk with a minimum width of (5) feet shall be installed on both sides of all thoroughfares. Refer to FDOT Roadway Design Standards, latest revision, for curb cut ramp specifications.

D. The concrete shall be given a broom finish. The surface variations shall not be more than 1/4" under a ten foot straightedge, nor more than 1/4" on a five-foot traverse section. The edge of the sidewalk shall be carefully finished with an edging tool having a radius of 1/2".

E. Expansion joint: expansion joints between the sidewalks and the curb or driveway or at fixed objects and sidewalk intersections shall be 1 /2" material shall meet the requirements of ASHTO M153 or ASHTO M213. For long pouring, an expansion joint shall be placed at intervals not to exceed 120'.

F. Contraction joints:

(1) Open type joints. Open type contraction joints shall be formed by staking a metal bulkhead in place and depositing the concrete on both sides. After the concrete has set sufficiently to preserve the width and the shape of the joint, the bulkhead shall be removed. After the sidewalk has been finished over the joint, the slot shall be finished with a tool having a 1 /2" radius.

(2) Sawed joints. A slot approximately 3/16" wide and not less than 1" deep at 1 0' centers shall be cut with a concrete saw after the concrete has set.

G. Sidewalks along other streets shall be constructed and dedicated as required by the approving authority when necessary to continue an existing or proposed sidewalk.

H. Handicap ramps shall meet ADA Standards, and detail sheets 302.1, 302.2 and 302.3.

I. All sidewalks in right-of-way within 10' of an existing or proposed tree that will exceed 6" in diameter at maturity shall be 5" thick and contain 2-#3 rebar, 20' long, centered vertically and spaced 3' on center. Palms are not considered trees.

J. Drop off hazards shall be protected per FDOT Plan Preparation Manual, latest edition. Slope shall not start closer than 6" to the sidewalk.

K. For complete sidewalk details. See FDOT Roadway Design Standards, latest revision. Index 304. Sheets 1 through 7 and Index 310. Sheets 1 & 2.

3.8.2 SIDEWALK CONSTRUCTION DEFERRAL

The Department Director may approve a deferral of sidewalk construction if the owner executes an "Agreement to Defer Completion of the Required Sidewalk" and if one (1) or more of the following situations apply:

A. When constructing sidewalks would be technically impractical in terms of engineering, design, or construction practices, or

B. When constructing sidewalks would be technically impractical due to the unusual size, shape, topography or existing conditions of the land (including the location of agency jurisdictional areas); or

C. Where a pedestrian easement would not provide for a satisfactory alternate location, or

D. When pending public improvements within the right-of-way would make provision of the sidewalks redundant.

E. When the sidewalk is required for a minor subdivision plat application, not located within two (2) walking miles of an existing public, elementary or middle school.

This agreement shall be recorded on the Public Records of Manatee County, Florida in a manner to run with the land prior to issuance of any temporary or permanent Certificate of Occupancy. This agreement shall be binding upon the property owner and all subsequent owners.

SECTION 3.9 PARKING

3.9.1 CONSTRUCTION AND MAINTENANCE.

A. Surface

All off-street parking facilities, including drive aisles, travel lanes, and driveways, except single-family residences in the "A" and "A-1" zoning districts shall be constructed and maintained in accordance with the standards contained in this Manual, but at a minimum shall be provided with a smooth, dustless surface of cement concrete or bituminous concrete.

The Department Director may approve the utilization of perforated type paver blocks or grassed parking areas for a portion of the required number of vehicular parking spaces for churches or other places of worship, for places of public assembly for meetings or other events, and for temporary uses; where it is clear that such grassed surface and perforated type paver blocks can be adequately maintained due to the infrequency of use, and that adequate permanent traffic control means will be provided, and that paved parking will be provided for all weekday employees and visitors. Each parking space within the grassed parking area shall be delineated with wheel stops, drive aisle pavement markings, vertical markers, or some other means of delineating the spaces.

(1) Large Projects. This section shall apply to retail and wholesale sales establishments greater than one hundred and fifty thousand (150,000) square feet to allow for seasonal overflow parking. However, in no instance shall the alternative surface be allowed for more than twenty (20) percent of the required parking for the project. The applicant may choose to use either grass parking with paved drive aisles and wheel stops or permeable paver block with paved drive aisles and wheel stops. This parking must be in locations furthest from the entrances of the establishments and shall not be for daily use.

(2) Vehicle Use Areas within Watershed Overlay Districts. Proposed vehicle use areas in non-residential projects located within the WP-E and WP-M watershed overlay districts may provide up to fifty (50) percent of their required parking areas with a grass or other such pervious surface, provided that the drive aisles are paved, and that the pervious parking spaces are located furthest from the entrance of the building. Such pervious parking spaces shall be allowed in multi-family projects only in guest parking spaces and spaces not in daily use by the residents and staff.

B. Marking of Spaces. Parking areas for three (3) or more vehicles shall have individual spaces clearly marked by permanent striping of the parking stall.

C. Curbs or Stops. The periphery of all off-street parking areas regardless of surface material and landscaped areas within parking areas shall have curbs, wheel stops, or similar permanent devices.

D. Encroachment by Vehicle Parking Spaces.

(1) The front of a vehicle may encroach upon a landscaped area or walkway when said area is at least eight (8) feet in width and where permanent wheel stops or curbing are provided.

(2) No vehicle shall encroach or overhang upon any sidewalk or walkway, more than two (2) feet measured from the outside of the curb line. However, an encroachment of three (3) feet measured as above, may occur if the sidewalk at the head of the car stall, is widened to at least eight (8) feet.

(3) No tree or shrub of more than two (2) feet in height shall be located within two (2) feet of the edge of the landscape area.

(4) No encroachment into the visibility triangle is allowed.

(5) The minimum depth of the parking stall shall be seventeen (17) feet if the sidewalk encroachment is utilized. Under no circumstances shall a parking stall length be reduced below seventeen (17) feet.

E. Drainage. All off-street parking facilities shall be designed to accommodate stormwater drainage in accordance with the requirements of this manual, the Stormwater Management Design Manual, and the Land Development Code.

SECTION 3.10 AS-BUILT REQUIREMENTS FOR ROAD PAVING, GRADING & DRAINAGE

3.10.1 DRAINAGE, PAVING AND GRADING RECORD DRAWINGS

A. General

When construction is complete, record drawings, indicating the location and elevations of the improvements that have been built, shall be provided to Manatee County. The record drawings shall be a special revision of the construction drawings, and shall depict design information crossed out (or screen shaded) and replaced by accurate record information.

B. Record Information

(1) All stormwater drainage systems including underdrain cleanouts, catch basins, junction boxes, and any other structures located in the right-of-way or an easement, shall be located by elevation and by station and offset based on either baseline of construction, edge of existing pavement, or recorded right-of-way line. For facilities located on private roads, the dimensioning shall be from centerline of paving or other readily visible baseline.

(2) Elevations shall be provided for all catch basin rim and inverts; junction box rims and inverts; control structure top of grate, baffle, weir, orifice, oil skipper and inverts. Elevations shall also be provided at the PVI's and at every other lot line or 200 feet, whichever is less, of drainage swales and ditches. Bench marks and elevation datum shall be indicated.

(3) Slopes for pipes and ditches shall be recalculated, based on actual field measured distances, elevations, pipe size and type shown. Cross section of drainage ditches and swales shall be verified.

(4) Centerline of roads shall be tied to right-of-way lines. Elevation of roadway centerline shall be given at PVI's and at all intersections.

(5) Record drawings shall show bearings and distances for all right-of-way and easement lines and property corners.

(6) Locations and elevations of drainage ditches and swales shall be shown every 200 feet (measured along the centerline) or alternate lot lines, whichever is closer. Dimensions at these locations shall indicate distance from the centerline of right-of-way to the facility.

(7) Sidewalks, fences and walls, if installed at the time of initial record drawing submittal, shall be located every 200 feet or alternate lot lines, whichever is closer. Dimensions shall include distance from the right-of-way line and the back of curb and lot line or easement line.

(8) Retention pond elevations shall be shown for high water level, normal water level, top of bank, bank side slopes and bottom of dry ponds verified.

(9) Underdrain cleanouts for retention systems outside the right-of-way shall be located by station and offset from an appropriate baseline.

(10) On record drawings, at locations where the horizontal positions of constructed pipelines or other stormwater structures deviate by more than 5 feet (as scaled on the drawing) from the horizontal positions that were shown on the construction drawings, the actual positions of the pipelines or structures shall be measured and they shall be depicted in their actual positions on the record drawings and their original design positions shall be crossed-hatched out or screen shaded.

C. Requirements as to Form

(1) Every set of record drawings shall have a cover sheet with a vicinity map, which shows where the project is located, and a key map, which shows where each sheet in the record drawing set is located inside the project boundaries.

(2) Each sheet of the record drawings shall have the title “DRAINAGE, PAVING AND GRADING RECORD DRAWING” printed on it in large, bold lettering, near the title block.

(3) Record drawing information submitted in tabular form shall not be accepted. Record information notes shall be positioned individually on the drawings near the depictions of structures to which each note corresponds.

(4) Record information notes shall be bold, italics, boxed or clouded to identify them as record information.

(5) Record drawings shall have a revision note such as “Record drawing” in the revision block and a date corresponding to the date the record drawing was issued.

(6) Record information shall be presented in a clear and comprehensible form.

(7) The drawing scales used in the record drawings shall be the same as were used in the construction drawings, and the sheet number of each record drawing sheet shall be the same as the sheet numbers that were used on the construction drawings from which the record drawings originate.

(8) All sheets that were used to depict locations and elevations of drainage structures in the construction drawings shall be included in the record drawing set.

(9) Record drawings shall accurately depict all existing improvements lying within the immediate vicinity of the constructed stormwater system. Existing improvements shall include, but not be limited to: sidewalks, walls, fences, road surfaces, buildings, and other utilities. Rights of way, easements, and property corners shall be shown and shall be of sufficient detail as to constructed stormwater systems are within the easements or rights of way. A reference to the recording document (O.R. Book or Plat Book and Page) shall be included with any depiction of a right-of-way or easement.

(10) Each roadway depicted on the drawings shall have the correct roadway name noted on it. Provisional roadway names, such as “Street A”, shall not be allowed on the record drawings. Each new lot of a new subdivision shall have its street address number noted on the record drawings.

(11) Horizontal locations required for stormwater structures shall be to the corner of each installation. Top of ground or pavement elevations required along pipelines shall be reported to the nearest 0.1 feet. Top of pipe elevations shall be to the nearest 0.1 feet. Elevations of catch basin rims and junction box pipe inverts shall be reported to the nearest 0.01 feet. Horizontal locations of all features shall be reported to the nearest 0.1 feet.

(12) Computer drawing files submitted shall be AutoCad© Release 14 or later release date versions. All reference files required to recreate the signed and sealed record drawings shall be included in the submitted digital files. Computer drawing files format shall be DWG only and shall be Windows 7 or Windows 2000 or Windows XP compatible.

D. Monumentation

(1) Record information shall be referenced by station and offset to a monumented baseline. The monumentation for the baseline shall be shown or described on the record drawing (i.e. iron rod & cap, nail & disk or other durable and identifiable monument). For each baseline, there shall be at least two monuments described and referenced. State Plane Coordinates for the monuments shall be shown in NAD 83 (99 adjustment) in feet. Developments not within existing or proposed subdivisions and not within 1.5 miles from existing Manatee County Primary Control Points or platted State Plane Coordinates may be exempted from the requirement for monuments to be based on State Plane Coordinates.

(2) The alignment of the baseline shall be along the centerline or edge of the following: an existing paved road, recorded right-of-way, recorded easement, face of an existing building, existing sidewalk or other existing, identifiable reference line. Offsets from the baseline shall not exceed 150 feet. All elevations shown on record drawings shall be referenced to a minimum of two described bench marks. A minimum of one on-site bench mark shall be described including datum. All bench marks shall be based upon NGVD29 or NVD88 (NAVD 88 preferred).

(3) All locations and elevations shall be field located by or under the direct supervision of a Florida Licensed Surveyor and Mapper.

E. Certifications

(1) Record Drawings shall be certified by a Florida Licensed Surveyor and Mapper. The certification shall state that the Record Locations and Elevations depicted on the Record Drawing are true and correct and were collected in the field by the Surveyor and Mapper or by a representative under the direct supervision of the Surveyor and Mapper. Certifier shall be fully responsible for the accuracy of the Record Locations and Elevations.

(2) Record Drawings shall be certified by the Engineer-of-Record. The certification must state that the improvements have been constructed in substantial conformance with the approved plans.

(3) Record drawings may not include any statement that the information was obtained from another party other than the Surveyor and Mapper or Engineer of Record. Statements such as “as-built information provided by contractor” shall not be permitted.

F. Submittals

(1) Record drawing submittal materials shall be attached to a transmittal letter, which shall list the following information:

a. Submittal date.

b. Project Title.

c. Final Site Plan number assigned by the County.

d. Title and sheet number of each record drawing sheet submitted.

(2) Initially, the following materials shall be submitted for review and approval:

a. Transmittal letter,

b. One checkprint copy of the record drawings,

c. Final plats and/or easements when applicable,

d. Final breakdown of construction quantities and final costs when applicable,

e. Performance bonds and warranties when applicable,

f. A copy of all of the infrastructure inspection reports, and

g. Up to four copies each of the water and wastewater Completion of Construction forms, fully signed, sealed and dated by the owner and engineer, or which one of each will be retained for the County's records.

(3) Once the checkprint copy of the record drawings has been reviewed and all corrections have been made, notification will be given to the engineer to make the final submittal, which shall consist of the following materials:

a. Transmittal letter,

b. One set original Mylar record drawings,

c. Three copies of the record drawings plan set, each signed, dated and sealed by the engineer of record,

d. One CD ROM copy of the record drawings plan set.

3.10.2 AS-BUILT REQUIREMENTS FOR SOUTHWEST FLORIDA WATER MANAGEMENT DISTRICT

Following is a list of information that is to be verified and submitted by the Engineer of Record in support of the Statement of Completion.

A. On behalf of the permittee, the Engineer shall certify that:

(1) At the time of final inspection, the surface water management system was completed substantially in accordance with the permitted construction plans and information. Any minor deviations from the permitting plans and specification will not prevent the system from functioning in compliance with the requirements of Chapters 40D-4 and 40D-4, or 40D-45, or 40D-6, F.A.C. (The as-built drawings and information submitted to the District shall confirm this certification); or

(2) At the time of final inspection, the system was NOT completed in substantial conformance with the permitted construction plans and information. (The registered professional engineer shall describe the deviation(s) in writing, and provide confirming depiction on the as-built drawings and information.)

B. The Engineer's certification shall be based upon on-site observation of construction (scheduled and conducted by the professional engineer of record or by a project representative under direct supervision) and review of as-built drawings, with field measurements and verification as needed, for the purpose of determining if the work was completed in accordance with original permitted construction plans, information and specifications.

C. The as-built drawings are to be based on the District permitted construction drawings revised to reflect any changes made during construction. Both the original design and constructed condition must clearly be shown. The plans need to be clearly labeled as "as-built" or "record" drawings. As required by law, all surveyed dimensions and elevations required shall be verified and signed, dated and sealed by a Florida

registered professional surveyor and mapper or professional engineer. The following information, at a minimum, shall be verified on the as-built drawings, and supplemental documents if needed:

(1) Discharge structures – Locations, dimensions and elevations of all, including weirs, orifices, gates, pumps, pipes, and oil and grease skimmers.

(2) Side bank and underdrain filters, or exfiltration trenches – locations, dimensions and elevations of all including clean-outs, pipes, connections to control structures and points of discharge to receiving waters.

(3) Storage areas for treatment and attenuation – dimensions, elevations, contours or cross-sections of all, sufficient to determine stage-storage relationships of the storage area and the permanent pool depth and volume below the control elevation for normally wet systems;

(4) System grading – dimensions, elevations, contours, final grades or cross-sections to determine contributing drainage areas, flow directions and conveyance of runoff to the system discharge point(s);

(5) Conveyance – dimensions, elevations, contours, final grades or cross-sections of system utilized to divert off-site runoff around or through the new system;

(6) Water levels – existing water elevation(s) and the date determined

(7) Benchmark(s) – location and description (minimum of one per major water control structure); and

(8) Wetland mitigation or restoration areas – Show the plan view of all areas, depicting a spatial distribution of planting conducted by zone (if plantings are required by permit), with a list showing all species planted in each zone, numbers of each species, sizes, date(s) planted and identification of source of material; also provide the dimensions, elevations, contours and representative cross-sections depicting the construction.

D. Submit the final subdivision plat or other legal documents, as recorded in the county public records, showing dedicated rights-of-way, easement locations and special use areas that are reserved for water management purposes and continuing operation and maintenance.

E. Additional information will be shown on the as-built drawings or otherwise provided as needed to verify and support the Statement of Completion (example: home owners association final documents, and other items required by permitting conditions.)

APPENDIX A: ROAD DETAILS

INDEX

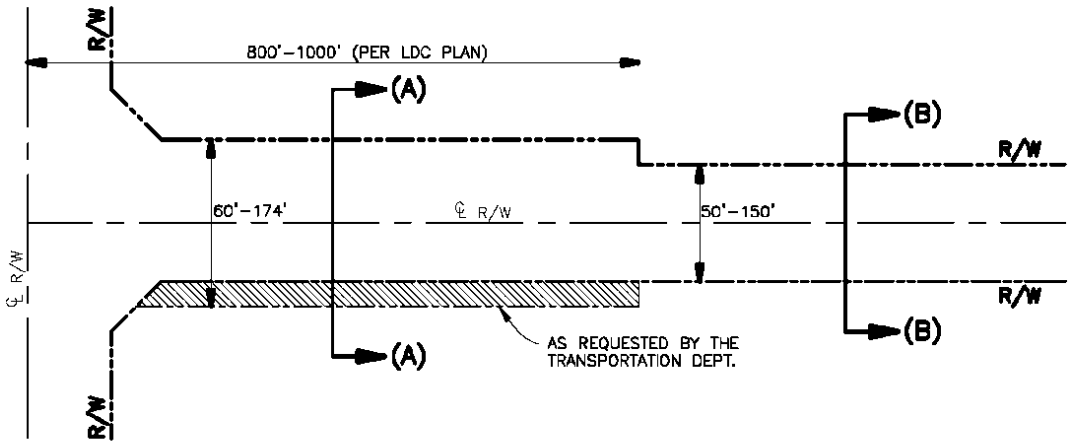

NOTE: R/W SECTION SHOWN (A–A) IS FOR CONNECTION TO MAJOR COLLECTOR OR GREATER. OTHERWISE USE R/W SECTION (B–B) THROUGHOUT.

R/W REQUIREMENT DETAIL

SHOULDER TYPE

ROAD CLASSIFICATION	SHOULDER WITH DITCH	SHOULDER WITH DITCH AND SIDEWALK	CURB WITH SIDEWALK
RURAL SHELL	VARIES	N/A	N/A
LOCAL URBAN RESIDENTIAL	N/A	N/A	50'
LOCAL RURAL RESIDENTIAL	84'	84'	N/A
URBAN INDUSTRIAL	N/A	N/A	50' MIN.
RURAL INDUSTRIAL	84'	84'	N/A
2–LANE DIVIDED SUBURBAN	120'	120'	42'
2–LANE DIVIDED URBAN	N/A	N/A	N/A
4–LANE DIVIDED	150'–175'	150'–175'	120'
6–LANE DIVIDED	175'–200'	175'–200'	150'

R/W WIDTH TABLE

MANATEE COUNTY TRANSPORTATION DEPARTMENT			R/W REQUIREMENTS	401.0
REV.BY	DATE	6/12/07 DATE OF B.O.C.C. APPROVAL		

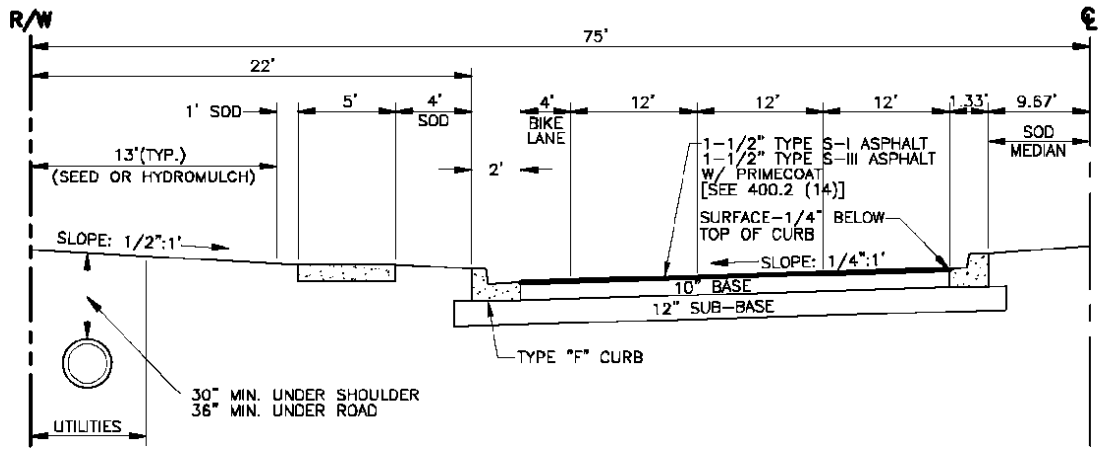

CURB WITH SIDEWALK

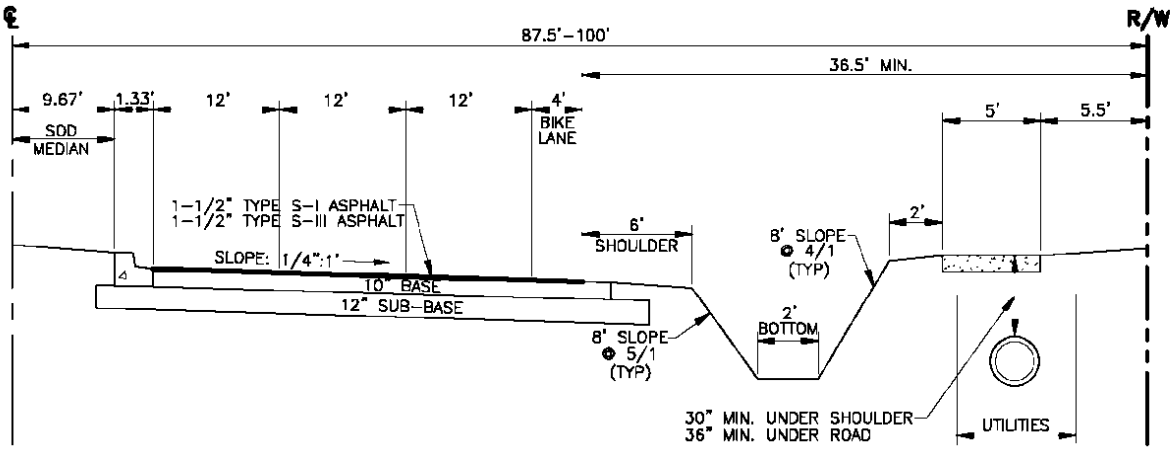

SHOULDER WITH DITCH

NOTES:

A) Asphaltic concrete surface course shall be 1-1/2" Type S-I and 1-1/2" Type S-III. Two lifts of asphalt shall be required. A performance bond shall be required, the second lift is delayed beyond initial road acceptance.

B) Base shall be 10" double course 850 lbs. per Sq. yd. lime rock compacted 98% mod. proctor density or 10" soil cement, or approved equal.

C) 12" Stabilized sub-base shall be shell marl blended with sandy sub-grade, minimum LBR 60, 98% T180, AASHTO.

D) When the first 2 lanes of an ultimate 6-lane need is approved, the outside 2 lanes shall be constructed first. In addition, left turn lanes must be constructed at all intersections at the time of initial construction unless exempted by the Transportation Director.

E) Median is to be sodded per sec. 400.1 (9).

F) See section 201.0 for curb & gutter types.

G) Sidewalk to be constructed per Sec. 300.

H) Laboratory tests are required to substantiate structural section design. Specifications shown on this sheet are minimum requirements.

MANATEE COUNTY TRANSPORTATION DEPARTMENT			TYPICAL 6-LANE DIVIDED ROADWAY	401.1
REV.BY	DATE			
		6/12/07 DATE OF B.O.C.C. APPROVAL		

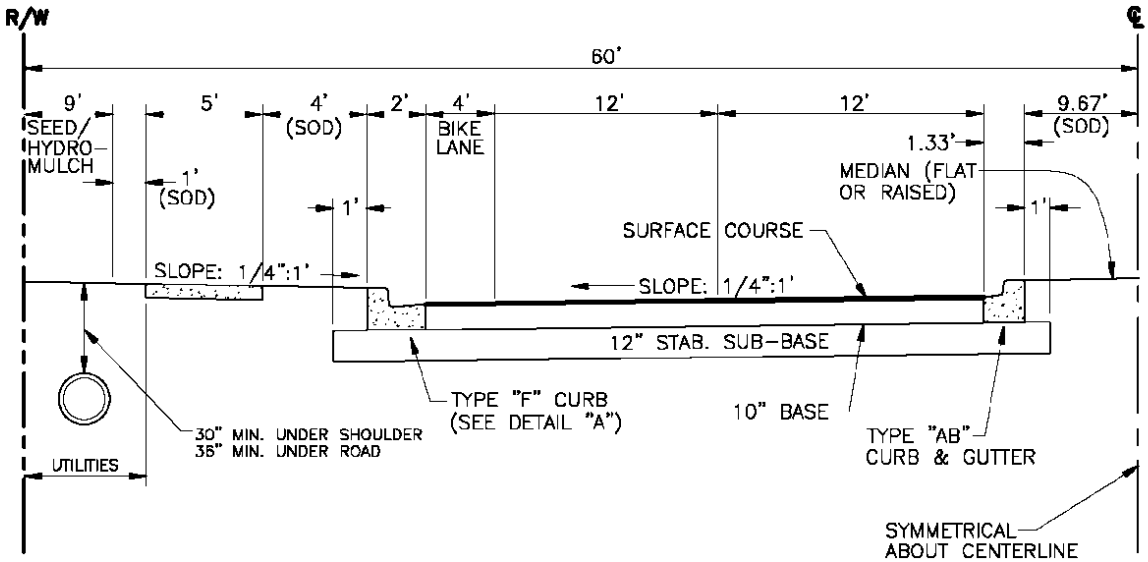

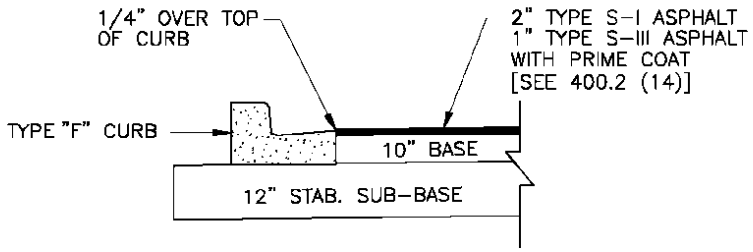

DETAIL "A"

NOTES:

A) Asphaltic concrete surface course shall be 2" Type S-I and 1" Type S-III. Two lifts of asphalt shall be required. A performance bond shall be required if the second lift is delayed beyond initial road acceptance.

B) 10" base course 850 lbs. per sq. yd. limerock* compacted to 98% T180 AASHTO, or 8" soil cement.*

C) 12" stabilized sub-base shell marl blended with sandy sub-grade minimum LBR 60, 98% T180 AASHTO.

D) Median is to be sodded.

E) See section 201.0 for curb and gutter types.

F) Laboratory tests are required to substantiate structural section design. Specifications shown on this sheet are minimum requirements.

G) No portion of pipe to be into sub-base.

H) Sidewalk to be constructed per section 300.

I) Sodding to be installed per section 400.1 (8).

J) When the first 2 lanes of an ultimate 4-lane need is approved, the outside 2 lanes shall be constructed first. In addition, left turn lanes must be constructed at all intersections at the time of initial construction unless exempted by the Transportation Director.

* Or approved equal, meeting same structural number.

MANATEE COUNTY TRANSPORTATION DEPARTMENT			TYPICAL 4-LANE DIVIDED ROADWAY	401.2
REV.BY	DATE	6/12/07 DATE OF B.O.C.C. APPROVAL		

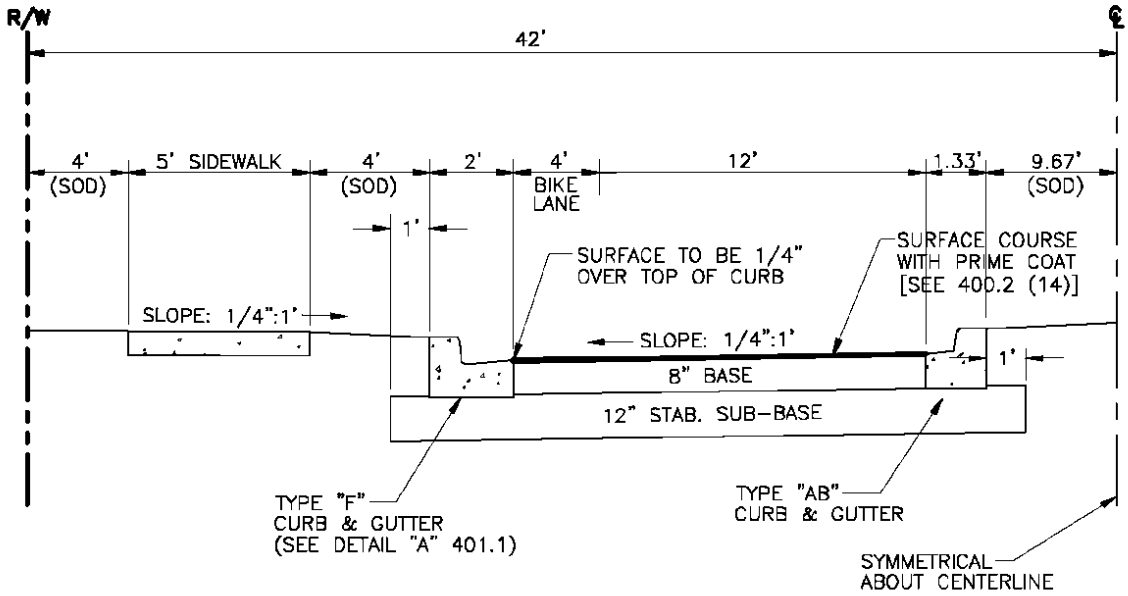

NOTES:

A) Asphaltic concrete surface course shall be 1–3/4" minimum thickness Type S III. Two lifts of asphalt shall be required, A performance bond shall be required if the second lift is delayed beyond road acceptance. The first lift shall be 1"of S–I. The second lift shall be 3/4" of S–III. The final lift of asphalt may not be placed until Certificate of Occupancy has been issued for 50th percentile home or building for that street.

B) 8" base course 850 lbs. per sq. yd. limerock compacted to 98% modified proctor density or 8" soil cement.*

C) 12" stabilized sub–base shell marl blended with sandy sub–grade minimum LBR 60, 98% T180 AASHTO.

D) No portion of the drainage pipe shall be allowed in the sub–base.

E) See section 201.0 for curb and gutter types.

F) Sidewalk shall be constructed per section 300.

G) Laboratory tests are required to substantiate structural section design. Specifications shown on this sheet are minimum requirements.

H) Sodding shall be installed per section 400.1 (B)

* Or approved equal, meeting same structural number.

MANATEE COUNTY TRANSPORTATION DEPARTMENT			2–LANE DIVIDED URBAN	401.3
REV.BY	DATE			
		6/12/07 DATE OF B.O.C.C. APPROVAL		

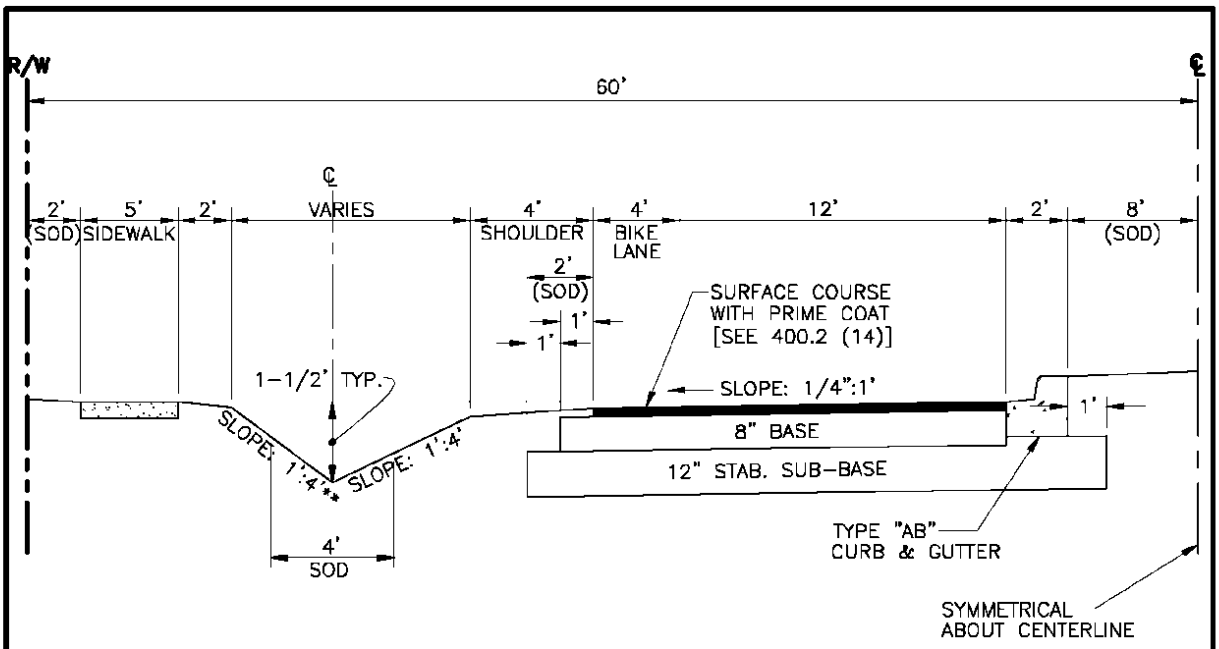

NOTES:

A) Asphaltic concrete surface course shall be 1-3/4" minimum thickness Type S III. Two lifts of asphalt shall be required. A performance bond shall be required if the second lift delayed beyond road acceptance. The first lift shall be 1"of S-I. The second lift shall be 3/4" of S-III. The final lift of asphalt may not be placed until Certificate of Occupancy has been issued for the 50th percentile home or building for that street.

B) 8" base course 850 lbs. per sq. yd. limerock compacted to 98% modified proctor density or 8" soil cement.*

C) 12" stabilized sub-base shell marl blended with sandy sub-grade minimum LBR 60, 98% T180 AASHTO.

D) No portion of the drainage pipe shall be allowed in the sub-base.

E) See section 201.0 for curb and gutter types.

F) Sidewalk shall be constructed per section 300.

G) Laboratory tests are required to substantiate structural section design. Specifications shown on this sheet are minimum requirements.

H) Sodding shall be installed per section 400.1 (8)

* Or approved equal, meeting same structural number.

** Ditch backslope may be a minimum of 1':3' with Manatee County Transportation Director's approval.

MANATEE COUNTY TRANSPORTATION DEPARTMENT			2-LANE DIVIDED SUBURBAN	401.4
REV.BY	DATE			
		6/12/07 DATE OF B.O.C.C. APPROVAL		

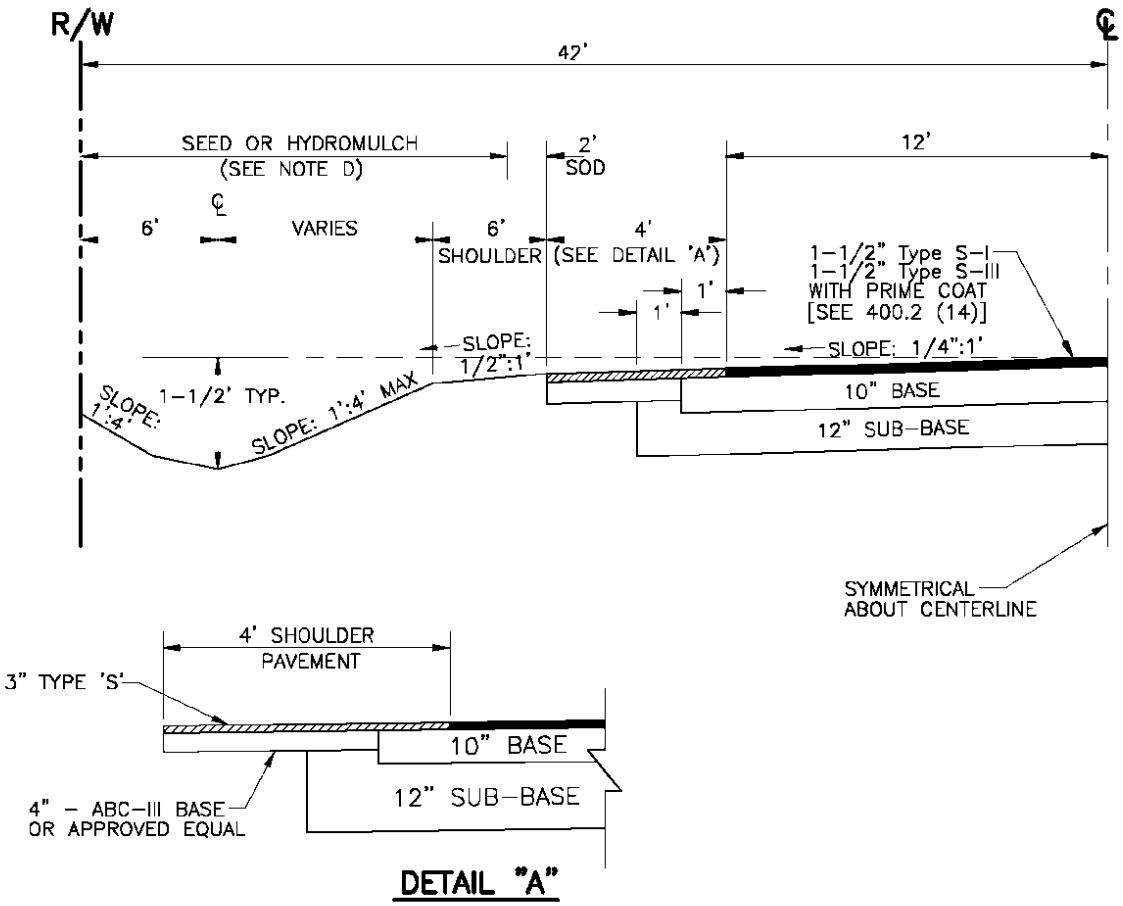

DETAIL "A"

NOTES:

A) Asphaltic concrete surface course shall be 3" minimum thickness (Type S). Two lifts of asphalt shall be required practice. The first lift shall be 2" of S-I, the second lift shall be 1" of S-III.

B) 10" base course 800 lbs. per sq. yd. limerock compacted to 98% proctor mod. density or 10" soil cement.*

C) 12" stabilized sub-base shell marl blended with sandy sub-base minimum LBR 60, 98% T180 AASHTO.

D) Shoulder, slopes and ditch bottom to have a minimum of 2" topsoil, bottom 4' of area and first 2' of shoulder is to be sodded, and the balance is to be seeded and mulched per section 400.1 (8)

E) Underdrain may be required if deemed necessary.

F) The slope of contiguous property may not exceed 1' to 4'.

G) No portion of a drainage pipe shall be allowed in the sub-base.

H) Laboratory tests are required to substantiate structural section design. Specifications shown on this sheet are minimum requirements.

* Or approved equal, meeting same structural number.

MANATEE COUNTY TRANSPORTATION DEPARTMENT			RURAL INDUSTRIAL	401.5
REV.BY	DATE	6/12/07 DATE OF B.O.C.C. APPROVAL		

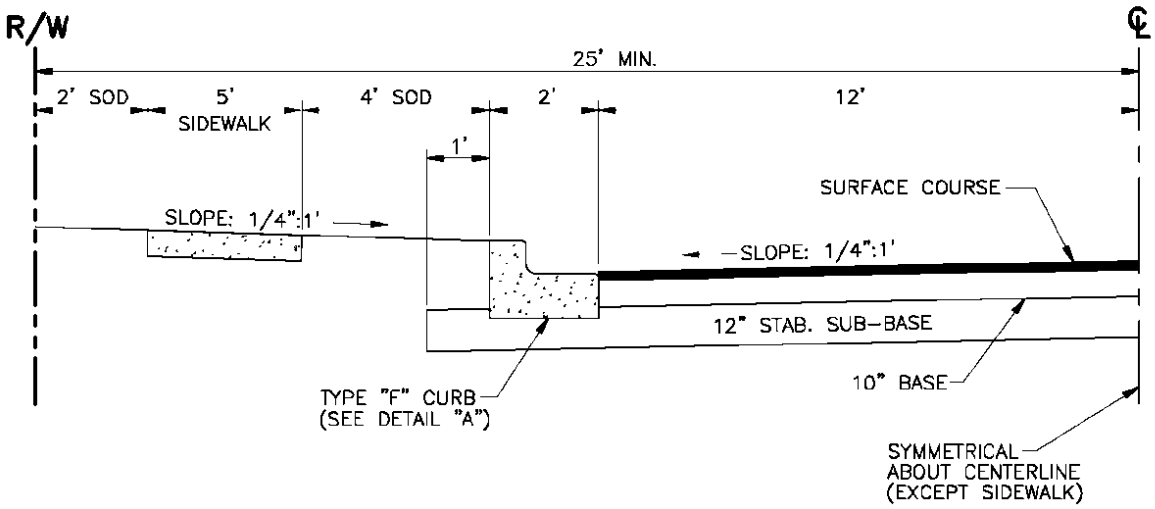

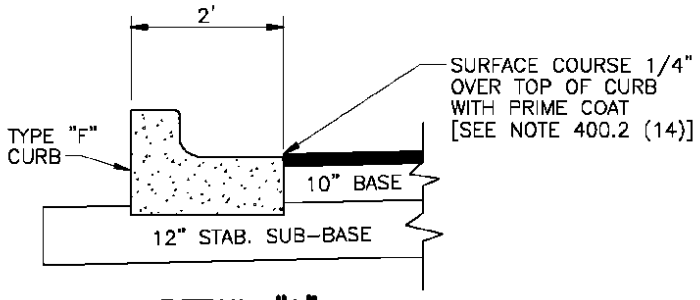

DETAIL "A"

NOTES:

A) Asphalt concrete surface course shall be 3" minimum thickness.
Two lifts of asphalt shall be standard practice.
The first lift shall be 2" of S-I, the second lift shall be 1"of S-III.

B) 10" base course 800 lbs. per sq. yd. limerock * compacted to 98% modified proctor density or 10" soil cement.*

C) 12" stabilized sub-base shell marl blended with sandy sub-grade minimum LBR 60, 98% T180 AASHTO.

D) Sidewalk shall be constructed per section 300.

E) See section 201.0 for curb and gutter types.

F) No portion of a drainage pipe shall be allowed in the sub-base.

G) Laboratory tests are required to substantiate structural section design.
Specifications shown on this sheet are minimum requirements.

H) Sodding shall be installed per section 400.1 (8)

* Or approved equal, meeting same structural number.

MANATEE COUNTY TRANSPORTATION DEPARTMENT			URBAN INDUSTRIAL	401.6
REV.BY	DATE	6/12/07 DATE OF B.O.C.C. APPROVAL		

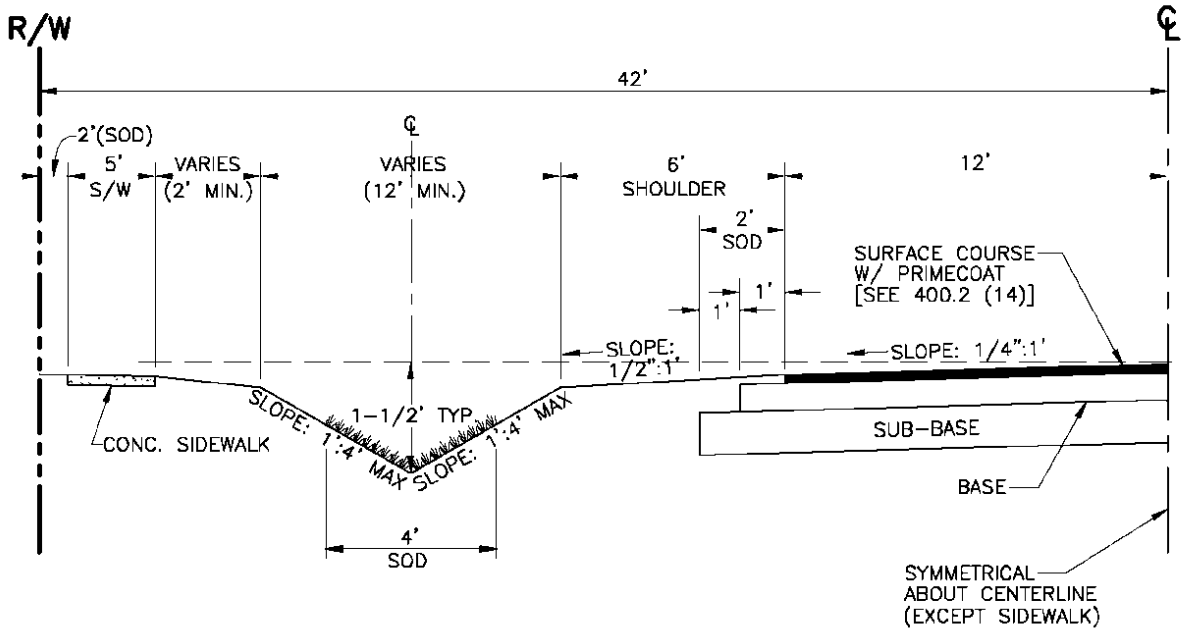

NOTES:

A) Asphaltic concrete surface course 1-3/4" minimum thickness (Type S). Two lifts of asphalt shall be considered acceptable, however a performance bond shall be required if second lift is delayed. The first lift shall be 1" of S-I, the second lift shall be 3/4" of S-III.

B) Base Course shall consist of 4-1/2" compacted sand asphalt (1200 lbs. stabilized), 6" base course 600 lbs. per square yard limrock compacted to 98% AASHTO T-180 density, or 6" soil cement* (6" Caloosahatchee Shell LBR 100).

C) 6" stabilized sub-base shell marl blended with sandy sub-base minimum LBR 40, 98% T180 AASHTO.

D) Shoulder, slopes and ditch bottom to have a minimum of 2" topsoil, bottom 4' of area to be sodded, and the balance is to be seeded and mulched per section 400.1 (8)

E) The slope of contiguous property may not exceed 1' to 4'.

F) 12" cover on storm sewers, no portion of pipe to be into sub-base.

G) Laboratory tests are required to substantiate structural section design. Specifications shown on this sheet are minimum.

* Or approved equal, meeting same structural number.

MANATEE COUNTY TRANSPORTATION DEPARTMENT			LOCAL RURAL RESIDENTIAL	401.7
REV.BY	DATE	6/12/07 DATE OF B.O.C.C. APPROVAL		

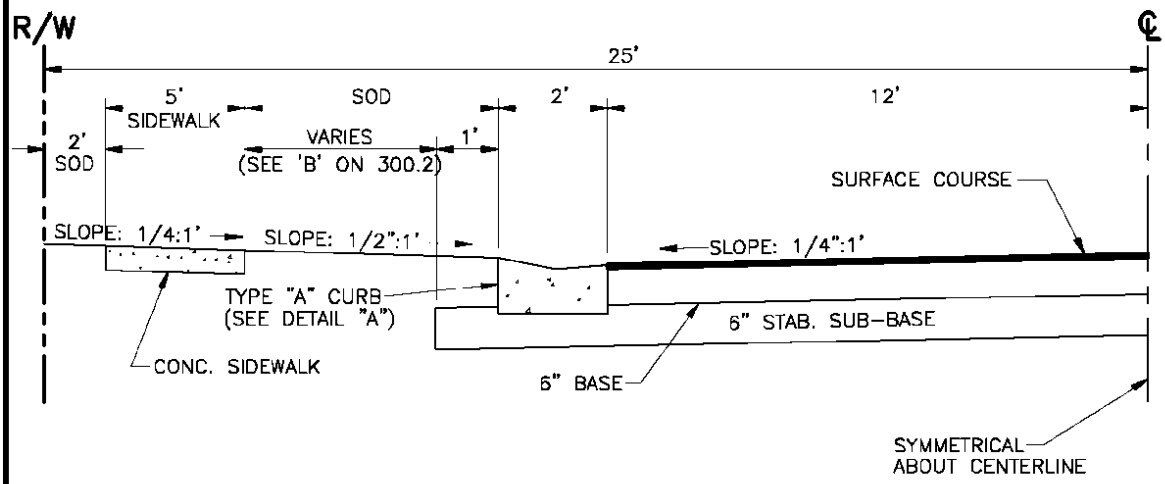

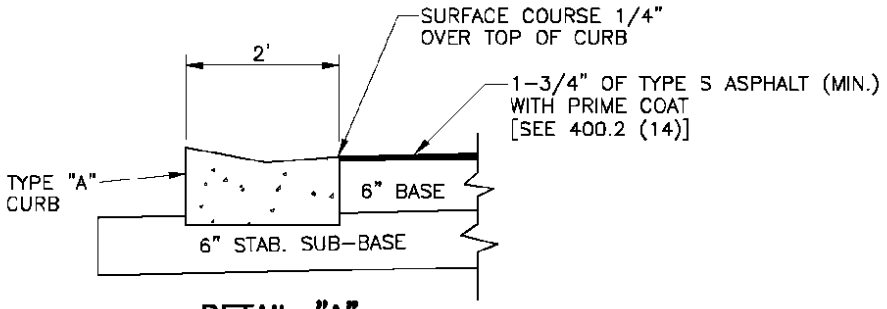

DETAIL "A"

NOTES:

A) Asphaltic concrete surface course shall be layed in two lifts. The first lift shall be 1" Type S-I or S-III. The second lift shall be 3/4" Type S-III. A performance bond shall be required if the second lift is delayed beyond acceptance of the road.

B) Base course shall consist of 4-1/2" compacted sand asphalt base (1200 lbs. stab.) or 6" Caloosahatchee shell compacted to 98% AASHTO T-180 density LBR 100 or 6" soil cement.*

C) 6" stabilized sub-base shell marl blended with sandy sub-grade minimum LBR 40, 98% T180 AASHTO.

D) On new construction, sanitary sewer may be placed on centerline of R/W if desired. All laterals to be installed at the same time as sanitary sewer main line.

E) See section 201.0 for curb and gutter types.

F) No portion of drainage pipe shall be allowed in sub-base. 12"minimum cover is required on storm drain.

G) Sidewalk shall be 1'or 2' inside R/W line, with 2' preferable. To be constructed per section 300.1

H) Laboratory tests are required to substantiate structural section design. Specifications shown on this sheet are minimum requirements.

I) If sidewalks are not required, only 2' of sod is required back of curb. Hydromulch balance of right-of-way.

J) Sodding shall be installed per section 400.1 (8)

* Or approved equal, meeting same structural number.

MANATEE COUNTY TRANSPORTATION DEPARTMENT			LOCAL URBAN RESIDENTIAL	401.8
REV.BY	DATE	6/12/07 DATE OF B.O.C.C. APPROVAL		

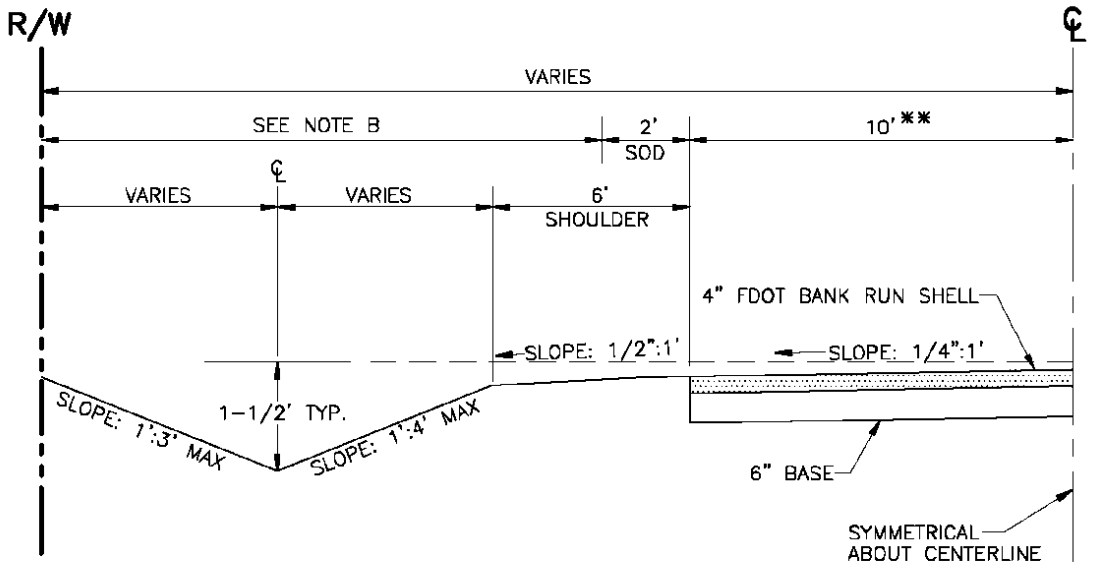

Note: These roads may only be approved for use in Ag-rural designated areas on rights-of-way dedicated prior to Oct. 15, 1990.
Roads will be classified as "Emergency Maintained Only."
Local residents are required to perform routine maintenance.

NOTES:

*A) Clean, stabilized 6" base. Minimum LBR 40, 98% T180 AASHTO. This requires raking and removal of plant material before compaction, if plant material exists within the right of way.

B) Road shall be finished with 4" FDOT bank run shell, then leveled and compacted.

C) Side 2' of road shoulder shall be sodded and if there is no substantial existing grass, remaining shoulder, slopes and ditch bottom shall have a minimum of 2" topsoil, and shall be seeded and mulched. Areas susceptable to erosion must be sodded.

D) The slope of contiguous property may not exceed 3' to 1'.

E) 12" cover on storm sewers, no portion of pipe allowed in base.

F) Laboratory tests are required to substantiate structural section design.
Specifications shown on this sheet are minimum requirements.

* Or approved equal.

** Road may be 12' in width, (6' half width) on non-through roads (Dead Ends) serving 4 or fewer lots. Shoulders shall be a minimum of 6' in width and constructed of a stabilized or compacted soil with a minimum LBR OF 40.
The Transportation Director may allow variance to the road standards for certain circumstances.

** Road may be 16' in width (8' half width) on non-through roads (Dead Ends) serving 5 to 8 lots.

MANATEE COUNTY TRANSPORTATION DEPARTMENT			RURAL SHELL ROAD	401.9
REV.BY	DATE	6/12/07 DATE OF B.O.C.C. APPROVAL		

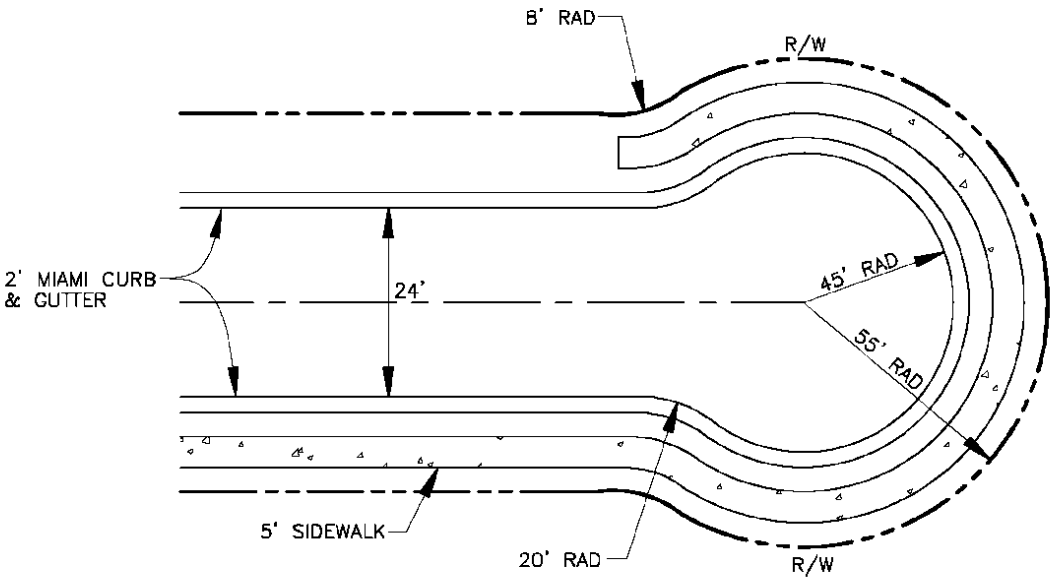

RESIDENTIAL CUL-DE-SAC

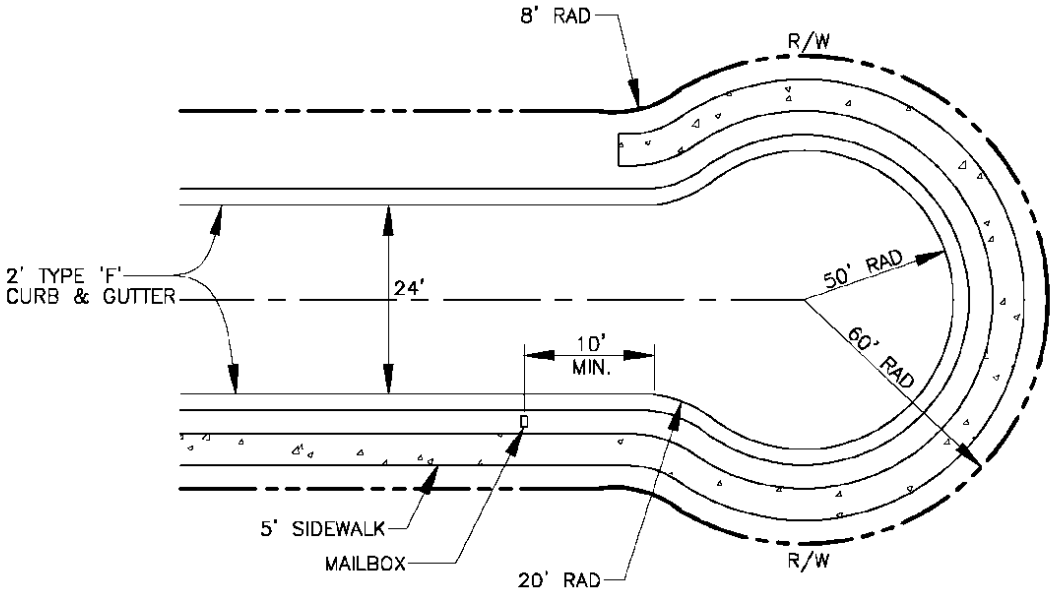

INDUSTRIAL CUL-DE-SAC

MANATEE COUNTY TRANSPORTATION DEPARTMENT			RESIDENTIAL AND INDUSTRIAL CUL-DE-SAC	401.10
REV.BY	DATE	6/12/07 DATE OF B.O.C.C. APPROVAL		

Sheet 401.11. Residential and Industrial Cul-de-Sac with Median

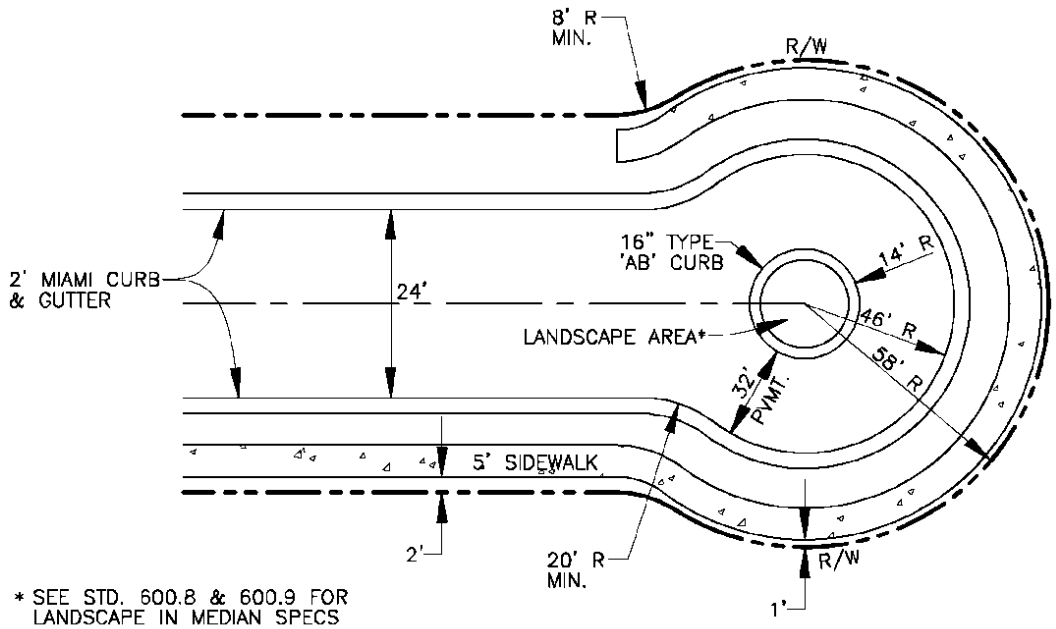

RESIDENTIAL CUL-DE-SAC

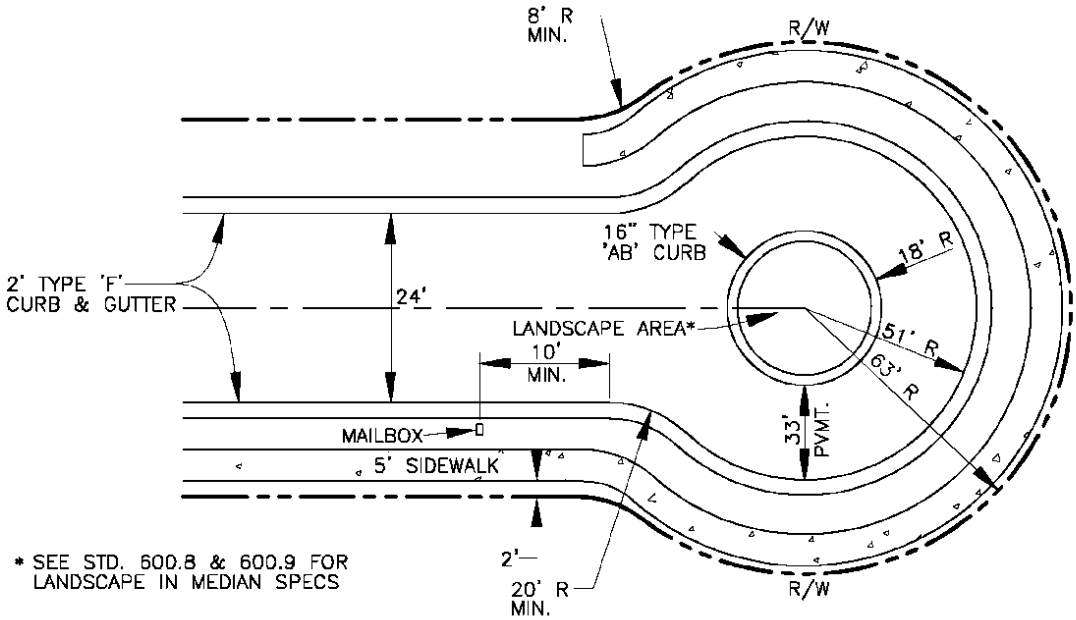

INDUSTRIAL CUL-DE-SAC

ALTERNATE:

TRUCK COLLAR DESIGN MAY BE USED BETWEEN RADIUS OF 16-1/2' AND 30' (SEE 404.2).

MANATEE COUNTY TRANSPORTATION DEPARTMENT			RESIDENTIAL AND INDUSTRIAL CUL-DE-SAC WITH MEDIAN	401.11
REV.BY	DATE	6/12/07 DATE OF B.O.C.C. APPROVAL		

MINIMUM FACE OF CURB RADIUS FOR INTERSECTING ROADS

ROAD CLASSIFICATION	LOCAL RESIDENTIAL (URBAN & RURAL)	INDUSTRIAL (URBAN & RURAL)	MINOR COLLECTOR	MAJOR COLLECTOR	ARTERIAL
LOCAL RESIDENTIAL (URBAN & RURAL)	25'	40'	35'	35'	35'
INDUSTRIAL (URBAN & RURAL)	40'	50'	50'	50'	50'
MINOR COLLECTOR	35'	50'	50'	50'	50'
MAJOR COLLECTOR	35'	50'	50'	50'	50'
ARTERIAL	35'*	50'	50'	50'	50'

INCREASE PER MPO FREIGHT MANAGEMENT STUDY

* WITHOUT TURN LANE = 50'

MANATEE COUNTY
TRANSPORTATION DEPARTMENT

REV.BY	DATE

6/12/07
DATE OF B.O.C.C. APPROVAL

MINIMUM CURB RADIUS

402.0

MINIMUM WIDTH OF CLEAR ZONE

TYPE OF FACILITY	DESIGN SPEED (MPH)							
	25 AND BELOW	30	35	40	45	50	55	60 AND ABOVE
	MINIMUM CLEAR ZONE (FEET)							
RURAL ▪	6	6 LOCAL 10 COLLECTORS 14 ARTERIALS	6 LOCAL 10 COLLECTORS 14 ARTERIALS	10 COLLECTORS 14 ARTERIALS	14 ARTERIALS AND COLLECTORS ADT < 1500 18 ARTERIALS AND COLLECTORS ADT ≥ 1500	14 ARTERIALS AND COLLECTORS ADT < 1500 18 ARTERIALS AND COLLECTORS ADT ≥ 1500	18 ARTERIALS AND COLLECTORS ADT < 1500 24 ARTERIALS AND COLLECTORS ADT ≥ 1500	18 ARTERIALS AND COLLECTORS ADT < 1500 30 ARTERIALS AND COLLECTORS ADT ≥ 1500
URBAN *	$1\frac{1}{2}$	4 **	4 **	4 **	4 **	N/A ▪▪	N/A ▪▪	N/A ▪▪

* FROM FACE OF CURB.

** ON PROJECTS WHERE THE 4' MINIMUM OFFSET CANNOT BE REASONABLY OBTAINED AND OTHER ALTERNATIVES ARE DEEMED IMPRACTICAL, THE MINIMUM MAY BE REDUCED TO 1-1/2'.

▪ USE RURAL FOR URBAN FACILITIES WHEN NO CURB AND GUTTER IS PRESENT. MEASURED FROM THE EDGE OF THROUGH TRAVEL LANE ON RURAL SECTION.

▪▪ CURB AND GUTTER NOT TO BE USED ON FACILITIES WITH DESIGN SPEED > 45 MPH.

NOTE: ADT IN TABLE REFERS TO DESIGN YEAR ADT.

MANATEE COUNTY
TRANSPORTATION DEPARTMENT

REV.BY	DATE

6/12/07
DATE OF B.O.C.C. APPROVAL

MINIMUM CLEAR ZONE WIDTHS

402.1

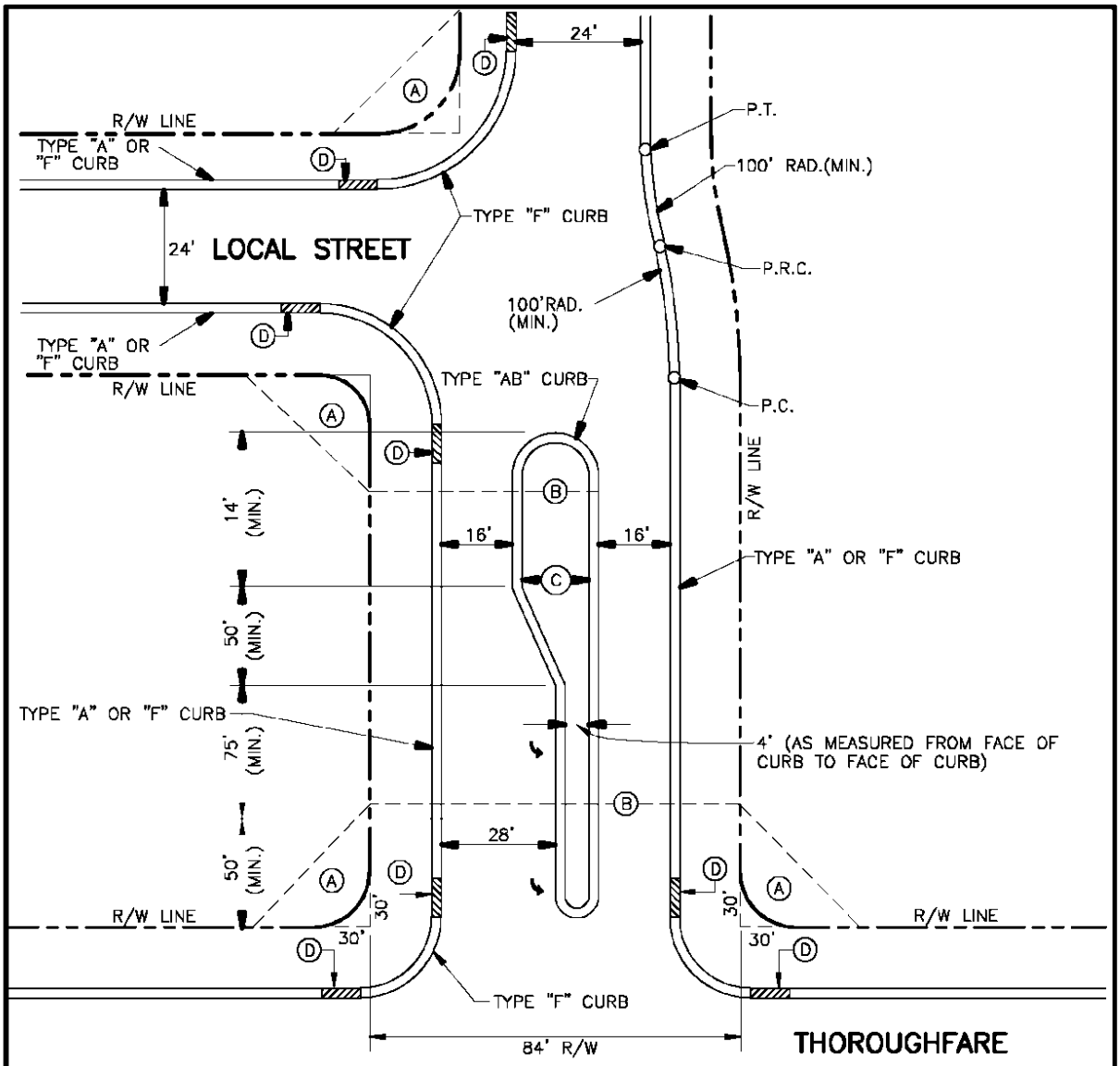

✳ (A) VISIBILITY TRIANGLE, 30' X 30' AREA PERMITTING NO OBSTRUCTION (1.0 FT. DIA. OR LESS) HIGHER THAN 2' NOR LOWER THAN 8.5', TO ASSURE PROPER VISIBILITY. (SEE L.D.C. 713).

(B) EXTENSION OF VISIBILITY TRIANGLE ACROSS MEDIAN STRIP TO COMPLY WITH STANDARD ABOVE.

(C) MEDIAN STRIP MINIMUM WIDTH 19.33' FROM BACK OF CURB TO BACK OF CURB, LENGTH – 300' MAX NOT EXTENDING BEYOND P.C. OF PAVEMENT INTERSECTION RADIUS OR R/W LINE OF INTERSECTING STREET.

(D) MINIMUM 5' CURB TRANSITION.
SEE SECTION 200 "CURB & GUTTER" SHEET 201.0 FOR CURB TYPE.
SEE SHEET 400.1 "GENERAL NOTES"
RADIUS AS REQUIRED BY ROAD DESIGNATION, LOCAL TO LOCAL 25' R., LOCAL TO THOROUGHFARE 35' R., THOROUGHFARE TO THOROUGHFARE 50' R.

* 30' IS A MINIMUM, MAY BE GREATER, VISIBILITY TRIANGLE TO BE DESIGNED PER F.D.O.T. MANUAL OF UNIFORM MINIMUM STANDARDS FOR DESIGN, CONST. & MAIN. FOR STREETS & HIGHWAYS (GREEN BOOK), LATEST REVISION.

MANATEE COUNTY TRANSPORTATION DEPARTMENT			MEDIAN REQUIREMENTS	402.2
REV.BY	DATE	6/12/07 DATE OF B.O.C.C. APPROVAL		

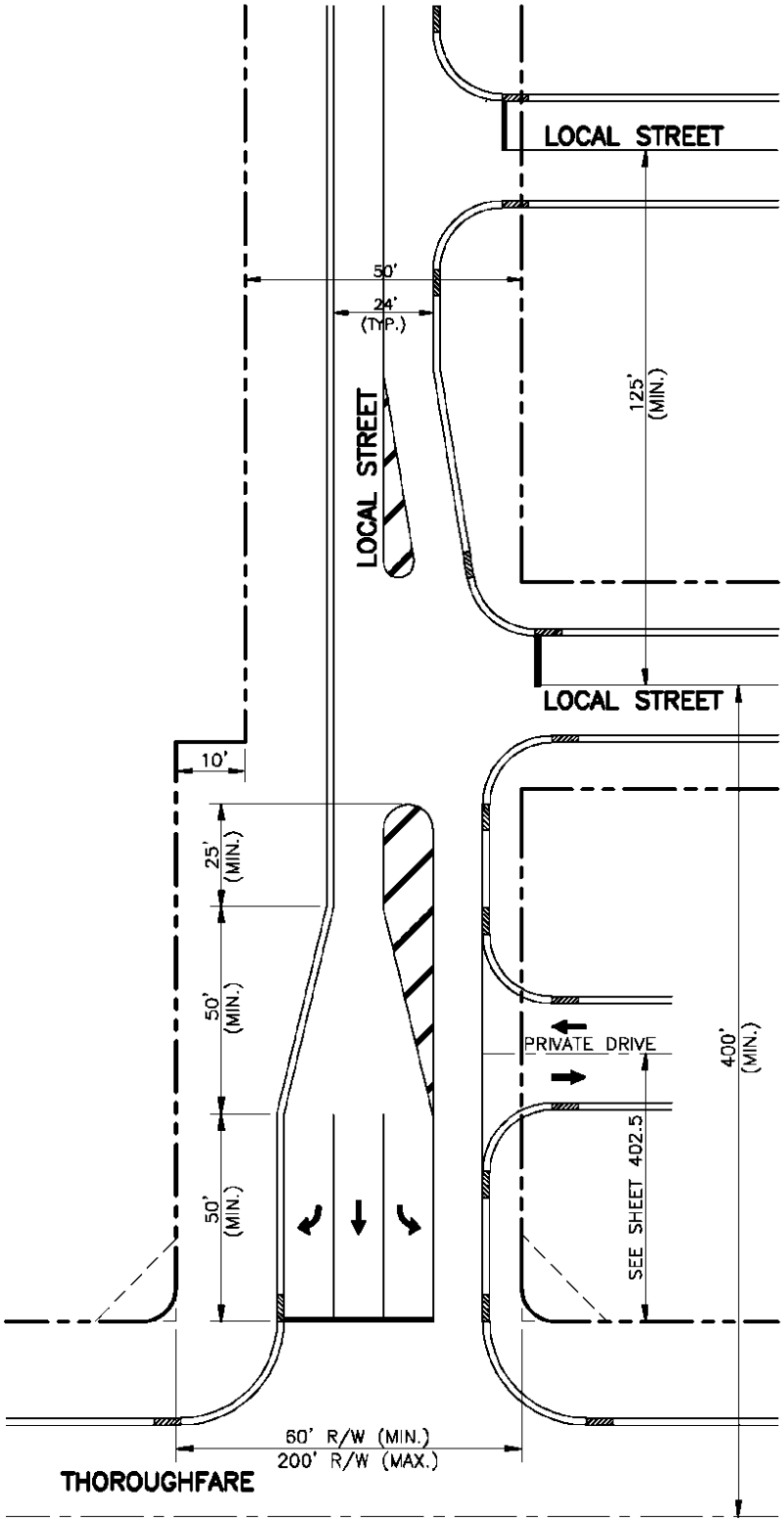

MANATEE COUNTY TRANSPORTATION DEPARTMENT			LOCAL STREET TO THOROUGHFARE SEPARATION REQUIREMENTS	402.3
REV.BY	DATE	6/12/07 DATE OF B.O.C.C. APPROVAL		

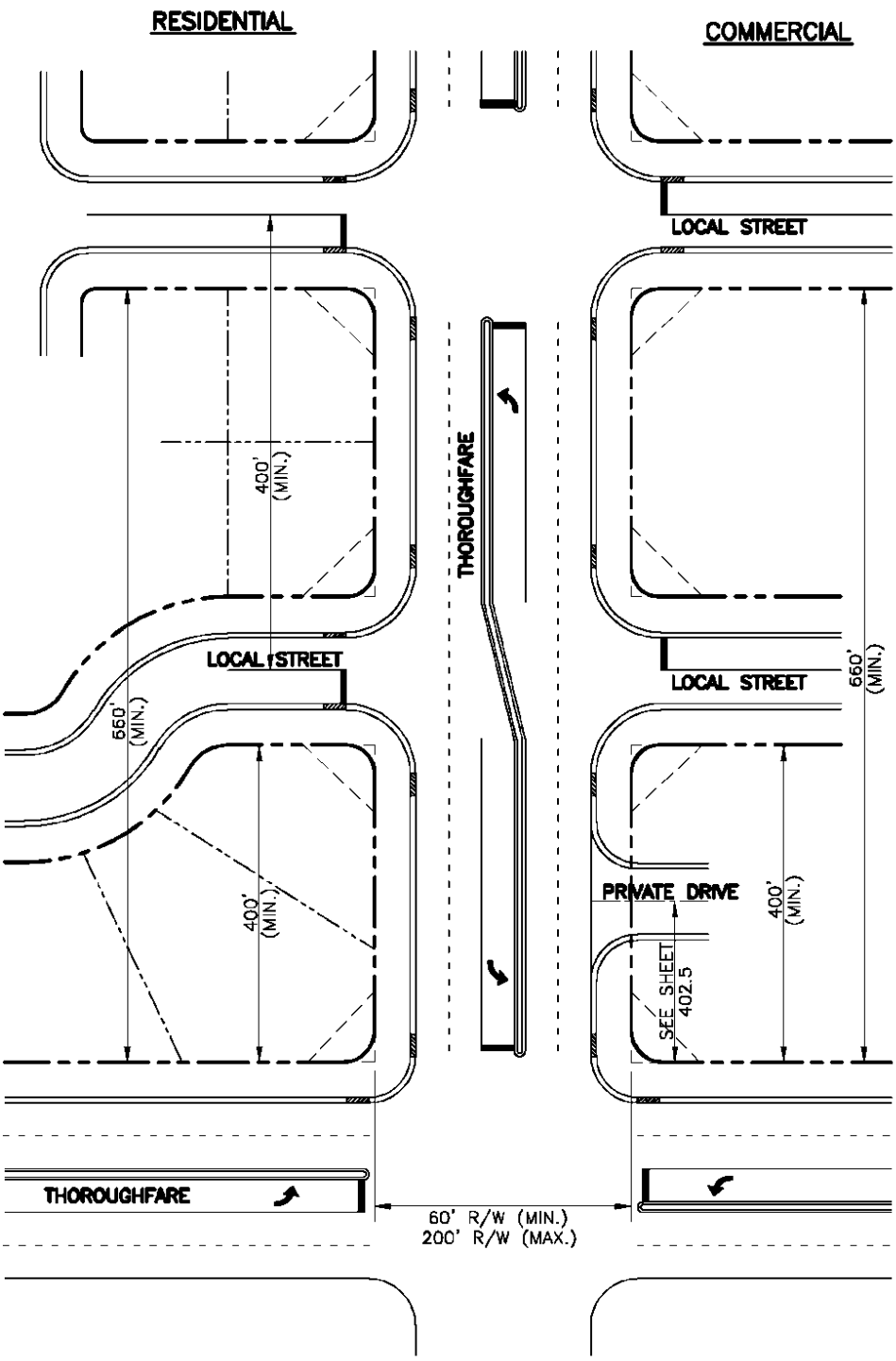

NOTE:

MINIMUM DISTANCE BETWEEN SIGNALIZED INTERSECTIONS SHALL BE 1,300'.

MANATEE COUNTY TRANSPORTATION DEPARTMENT			THOROUGHFARE TO THOROUGHFARE SEPARATION REQUIREMENTS	402.4
REV.BY	DATE	6/12/07 DATE OF B.O.C.C. APPROVAL		

SOIL CEMENT SPECIFICATIONS

1. DESIGN MIX:

A.) 300 P.S.I. (7 DAYS) LAB DESIGN.

B.) CEMENT CONTENT BY WEIGHT MUST BE A MINIMUM OF 5% AND A MAXIMUM OF 8%.

C.) SOIL, CEMENT AND WATER SHALL BE CENTRAL PLANT MIX ONLY.

2. PROJECT TEST SAMPLES:

A.) THE PILLS CAST FROM PROJECT OPERATIONS MUST BREAK AT 200 P.S.I. OR HIGHER AT 7 DAYS.

B.) CORES MAY BE TAKEN AT 14 DAYS TO PROVIDE ADDITIONAL INFORMATION REGARDING A SOIL CEMENT SECTION.

C.) CORE BREAKS BELOW 150 P.S.I. WILL NOT BE ACCEPTABLE.

D.) IN PLACE DENSITY TESTS SHALL BE MADE IN THE SUB-BASE AND BASE COURSE. FREQUENCY OF TESTING SHALL BE AT LEAST ONE TEST FOR EVERY 500 L.F. OF PAVEMENT. IF PROJECT IS LESS THAN 500 L.F., THEN A MINIMUM OF TWO DENSITY TESTS SHALL BE TAKEN.

E.) ALL CORES SHALL BE 6" DIAMETER.

F.) SUB-BASE TO BE A MINIMUM OF LBR 40 (UNLESS OTHERWISE NOTED).

3. CONSTRUCTION METHODS:

A.) CONSTRUCTION METHODS SHALL IN ACCORDANCE WITH F.D.O.T. STANDARD SPECIFICATIONS FOR ROAD AND BRIDGE CONTRUCTION, 2000 EDITION, SECTION 270 EXCLUDING SUB-SECTION 270-4.3.1 ("MIX IN PLACE"). ALL OTHER SUB-SECTIONS OF SECTION ARE APPLICABLE.

*NOTE: SOIL CEMENT CAN ONLY BE USED WITH SPECIFIC APPROVAL OF DIRECTOR.

MANATEE COUNTY TRANSPORTATION DEPARTMENT			SOIL CEMENT SPECIFICATIONS	403.0
REV.BY	DATE	6/12/07 DATE OF B.O.C.C. APPROVAL		

CEMENT TREATED BASE CONSTRUCTION

GENERAL:

1.1 THE CONSTRUCTION OF THE CEMENT TREATED BASE SHALL IN ACCORDANCE WITH F.D.O.T. STANDARD SPECIFICATIONS FOR ROAD AND BRIDGE CONSTRUCTION, 2000 EDITION, SECTION 270 EXCLUDING SUB-SECTION 270-4.3.1 ("MIX IN PLACE"). ALL OTHER SUB-SECTIONS OF SECTION ARE APPLICABLE.

1.2 THE SUBGRADE IS TO BE CONSTRUCTED TO F.D.O.T. SPECIFICATION SECTION 270-4, 2000 EDITION AND BE COMPACTED TO 98 PERCENT AASHTO T-180 DENSITY. THE SUB-BASE TO BE CONSTRUCTED OF MATERIAL HAVING A MINIMUM LBR OF 40.

1.3 THE CEMENT TREATED BASE IS TO HAVE A MINIMUM LABORATORY CURED FIELD MIX 7-DAY COMPRESSIVE STRENGTH OF 200 PSI, BY BAG SAMPLE.

1.4 SHELL MATERIAL SHALL BE MIXED WITH A MINIMUM CEMENT CONTENT BY WEIGHT OF 2%, BUT NOT TO EXCEED 4%. THE INTENT OF A 2% MIX IS NOT PRIMARILY TO GENERATE STRENGTH BUT TO ENHANCE A SHELL BASE WITH THE RESILENCY AND WATER RESISTANCE CHARACTERISTICS OF SOIL CEMENT, WITHOUT GENERATING THE PROBLEMATIC CRACKING CHARACTERISTICS GENERALLY ASSOCIATED WITH NORMAL SOIL CEMENT MIXES. THEREFORE, THE CONTRACTOR IS INSTRUCTED TO GENERATE A MIX CAPABLE OF ACHIEVING A FIELD TEST 7-DAY COMPRESSIVE STRENGTH IN THE RANGE OF 200 PSI TO 300 PSI, BY BAG SAMPLE.

1.5 BASE MATERIAL SHALL BE F.D.O.T. SHELL AND HAVE A MINIMUM LBR OF 100 AND +/-2% OPTIMUM MOISTURE PRIOR TO MIXING WITH CEMENT.

1.6 ANY AREA REPRESENTED BY A 400 PSI 7-DAY BREAK OR GREATER IS SUBJECT TO REJECTION BY THE OWNER OR OWNER'S REPRESENTATIVE AFTER OBSERVATION, EVALUATION AND TESTING. VALUES FROM 300 PSI TO 400 PSI SHALL BE SUBJECT TO REVIEW AND COMPARISON TO THE DESIGN MIX.

1.7 IT SHOULD BE NOTED THAT MOISTURE CONTENT, RAPIDITY OF COMPACTION EFFORT AND FINAL COMPACTION RESULTS HAVE AS MUCH, IF NOT MORE, INFLUENCE ON THE COMPRESSIVE STRENGTH AS DOES THE CEMENT CONTENT. IN ORDER TO GIVE THE CONTRACTOR A REFERENCED ACCEPTANCE STANDARD, LOWER AND UPPER VALUES OF 200 PSI AND 300 PSI HAVE BEEN ESTABLISHED. THESE VALUES ARE ALSO GIVEN SOME SUBJECTIVE LEEWAY IN THE INSPECTION OF THE FINAL PRODUCT.

1.8 ALL MATERIAL SHALL BE COLLECTED BY THE SACK METHOD, TRANSPORTED TO LAB IN SEALED/MOISTURE RETAINING ENCLOSURE AND TESTED WITHIN 2 HOURS OF FIELD SAMPLING.

TESTING AND INSPECTION:

2.1 ALL TESTING AND INSPECTION SHALL BE PERFORMED BY AN INDEPENDENT LABORATORY APPROVED BY THE ENGINEER/COUNTY.

2.2 THE CONTRACTOR SHALL MAKE AVAILABLE ALL MATERIALS TO THE LABORATORY FOR THE PURPOSE OF PERFORMING ROUTINE TESTS AS SPECIFIED. THIS INCLUDES SAMPLES FOR CEMENT TREATED BASE MIXTURE DESIGN, MAXIMUM DENSITY DETERMINATION, SIEVE ANALYSIS OR OTHER TESTS AS DIRECTED BY THE ENGINEER.

2.3 THE PILLS CAST FROM PROJECT OPERATIONS MUST BREAK AT 200 PSI OR HIGHER AT 7 DAYS.

2.4 TEST SAMPLES MAY BE TAKEN AT 14 DAYS TO PROVIDE ADDITIONAL INFORMATION REGARDING A CEMENT TREATED SECTION. SAMPLES SHALL BE SAWCUT, FULL DEPTH AND BE A MINIMUM OF 12"x12".

2.5 SAMPLE BREAKS BELOW 150 PSI WILL NOT BE ACCEPTABLE. ALL CORES SHALL BE 6 INCHES IN DIAMETER.

2.6 IN PLACE DENSITY TESTS SHALL BE MADE IN THE SUB-BASE AND BASE COURSE. FREQUENCY OF TESTING SHALL BE AT LEAST ONE TEST FOR EVERY 500 L.F. OF PAVEMENT. IF PROJECT IS LESS THAN 500 L.F., THEN A MINIMUM OF TWO DENSITY TESTS SHALL BE TAKEN. A MINIMUM OF TWO STRENGTH TEST VALUE SPECIMENS SHALL BE TAKEN EACH DAY (ONE IN THE MORNING, AND ONE IN THE AFTERNOON)

2.7 TEST RESULTS SHALL BE REPORTED IN WRITING TO THE COUNTY.

2.8 F.D.O.T. SHELL BASE MATERIALS WILL BE ONLY BASE MATERIAL ACCEPTED.

2.9 CRUSHED CONCRETE BASE MATERIAL REQUIRES DIRECTOR'S APPROVAL.

MANATEE COUNTY TRANSPORTATION DEPARTMENT			CEMENT TREATED BASE	403.1
REV.BY	DATE	6/12/07 DATE OF B.O.C.C. APPROVAL		

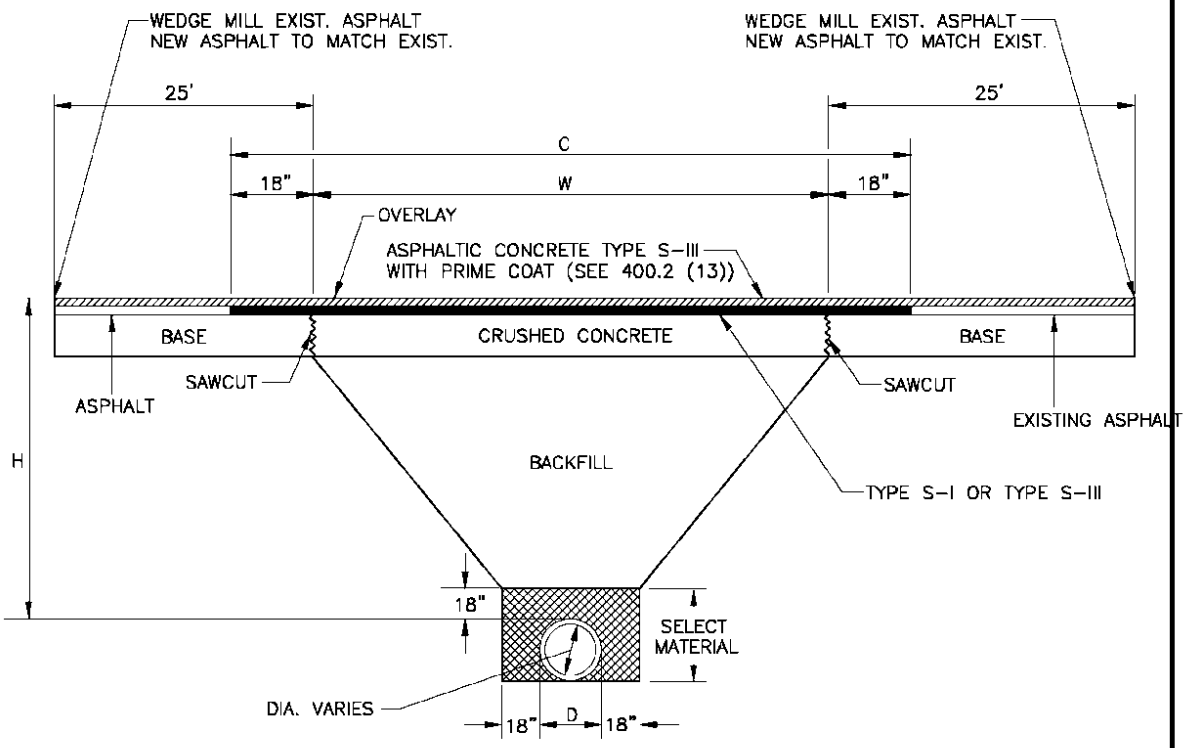

A. CRUSHED CONCRETE BASE SHALL BE A MINIMUM OF 8" THICK AND A MINIMUM OF "W" IN WIDTH, OR GREATER, WHERE DISTURBED AREA IS GREATER THAN "W" FROM EQUATION: W=(2 X H) + D + (2 X 18"). SAND ASPHALT BASE WILL BE AN ACCEPTABLE ALTERNATE.

B. BACKFILL, AASHTO M145-66 SHALL BE PLACED IN LAYERS NOT TO EXCEED 6", EACH LAYER WILL BE THOROUGHLY TAMPED AND/OR ROLLED TO 98% OF MODIFIED PROCTOR MAXIMUM DENSITY (AASHTO T-180). NON-SHRINK, HIGH SLUMP, 1,500 PSI CONC. BACKFILLL MAY BE USED AS AN ALTERNATIVE IF APPROVED BY TRANSPORTATION DEPARTMENT.

C. SELECT MATERIAL, AASHTO M-146-70, SHALL BE PLACED ON BOTH SIDES OF THE PIPE SIMUTANEOUSLY, COMPACT AREA UNDER HAUNCHES OF THE PIPE W/ MECHANICAL TAMPERS, AND THROUGHOUT THE REMAINDER OF THE SELECT MATERIAL.

D. ASPHALTIC CONCRETE FRICTION COURSE, SHALL BE THE SAME DEPTH AND TYPE AS EXISTING OR A MINIMUM OF ONE INCH, WHICHEVER IS GREATER. C = W+36

E. "H" = THE DEPTH FROM TOP OF PIPE TO THE CENTERLINE OF THE ROAD (MINIMUM OF 36") MINIMUM OF 30" UNDER FLOWLINE OF SIDE DITCHES.

F. RESTORE EXISTING SIGNAGE & MARKING WITH THERMOPLASTIC PER F.D.O.T. STANDARDS.

MANATEE COUNTY TRANSPORTATION DEPARTMENT			UTILITY ROAD CUT REPLACEMENT	403.2
REV.BY	DATE			
		6/12/07 DATE OF B.O.C.C. APPROVAL		

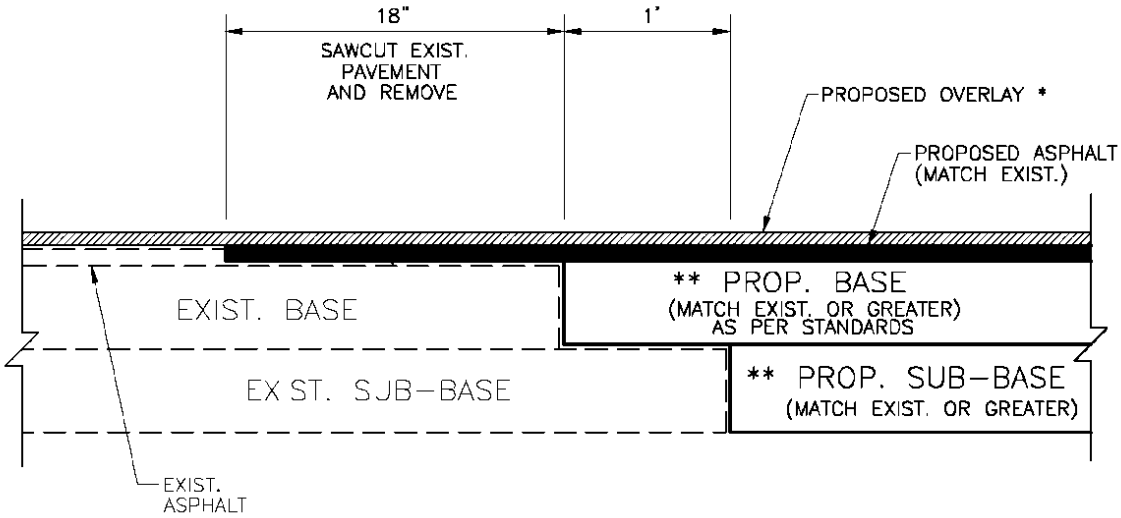

* NOTE: LIMITS OF OVERLAY – EDGE OF PAVEMENT TO EDGE OF PAVEMENT AND 25' BEYOND LIMITS OF CONSTRUCTION.

** NOTE: CONNECTION TO OLDER (SUBSTANDARD THICKNESS) ROADS MAY REQUIRE THICKER PROPOSED BASE AND SUB-BASE TO MEET CURRENT STANDARDS.

SIGNAGE AND MARKING PLAN SHALL ACCOMPANY CONSTRUCTION PLAN.

ROAD CONNECTION DETAIL

N.T.S.

MANATEE COUNTY TRANSPORTATION DEPARTMENT			ROAD CONNECTION DETAIL	403.3
REV.BY	DATE	6/12/07 DATE OF B.O.C.C. APPROVAL		

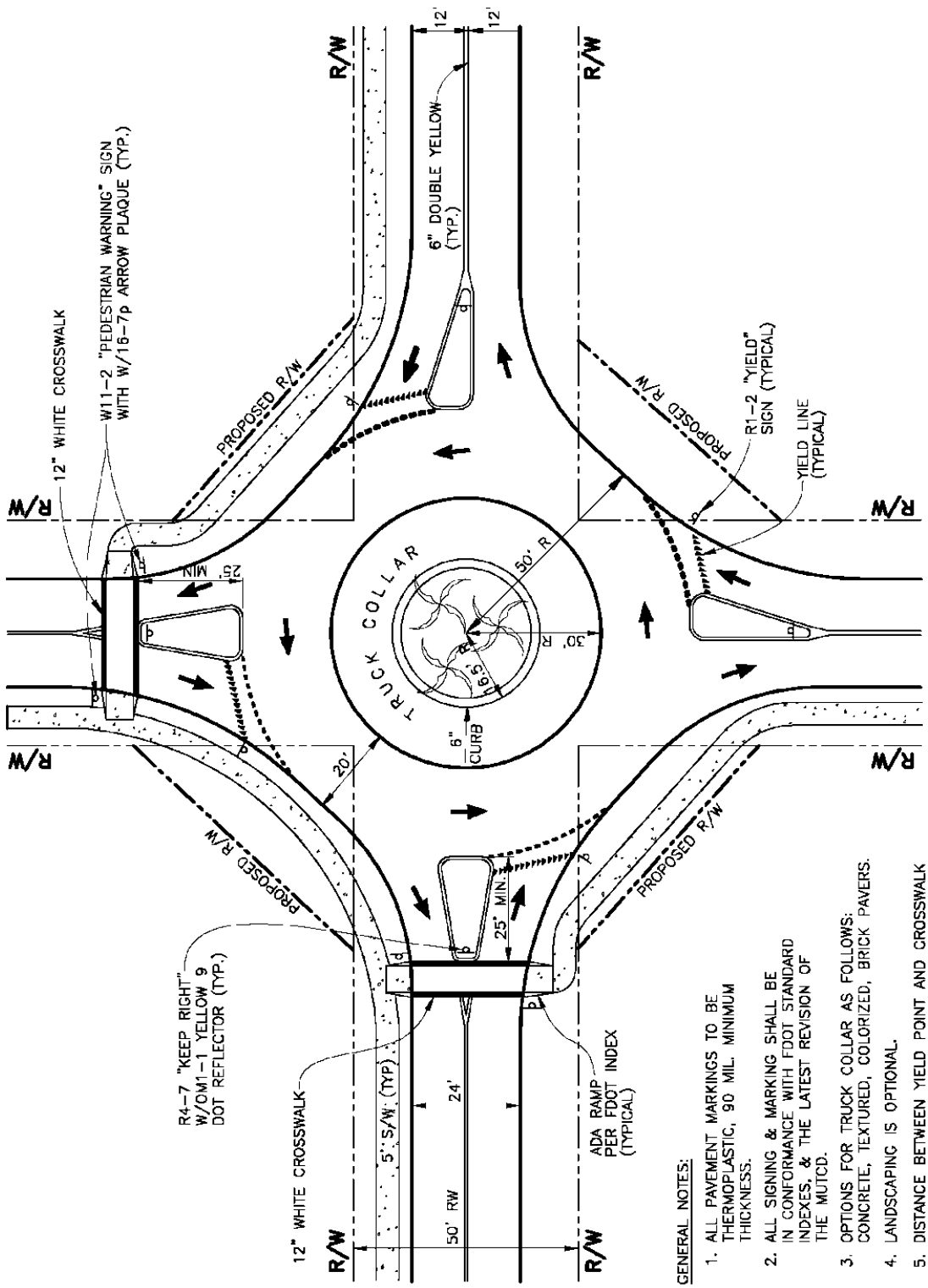

MANATEE COUNTY TRANSPORTATION DEPARTMENT			TYP. ROUNDABOUT FOR LOCAL & RESIDENTIAL STREETS	404.0
REV.BY	DATE	6/12/07 DATE OF B.O.C.C. APPROVAL		

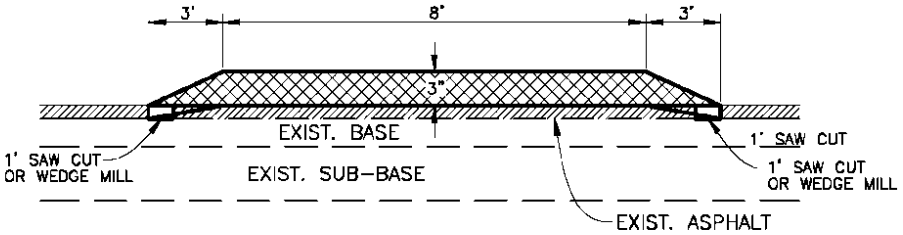

SECTION A–A

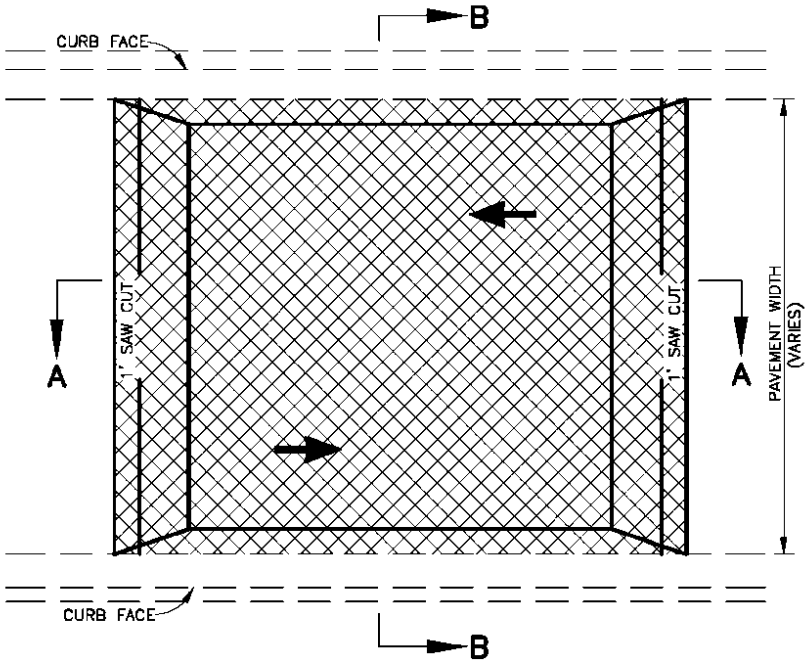

PLAN VIEW

NOTE: ALL PAVEMENT MARKINGS PER MUTCD.
DETAIL IS FOR APPLICATION TO EXISTING ROAD.

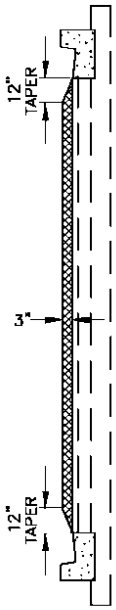

SECTION B–B

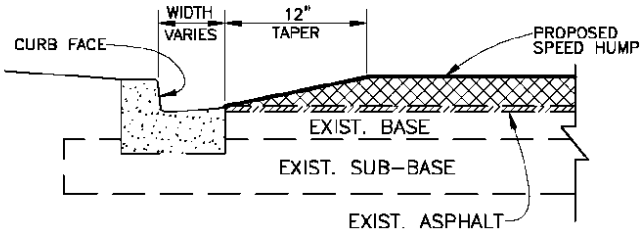

SPEED HUMP TAPER AT CURB

MANATEE COUNTY TRANSPORTATION DEPARTMENT			SPEED TABLE DETAIL	405.0
REV.BY	DATE			
		6/12/07 DATE OF B.O.C.C. APPROVAL		

APPENDIX B: SIGNAL DETAILS

INDEX

MANATEE COUNTY
TRAFFIC SUPPLEMENTAL SPECIFICATIONS

RECEIVED BY:
COMPANY NAME _____ DATE _____

RECEIVED BY:
PRINT NAME _____
SIGNATURE _____

LIST ADDRESSES AFFECTED OR PROJECT NO.:

_____
_____
_____
_____
_____
_____
_____
_____
_____

NOTE: THIS FORM MUST BE COMPLETED AND RETURNED TO THE MANATEE COUNTY PROJECT MANAGEMENT DEPARTMENT PRIOR TO RECEIVING THE TRAFFIC SUPPLEMENTAL SPECIFICATIONS.

MANATEE COUNTY TRANSPORTATION DEPARTMENT			TRAFFIC SUPPLEMENTAL SPECIFICATIONS REQUEST FORM	501.0
REV.BY	DATE	6/12/07 DATE OF B.O.C.C. APPROVAL		

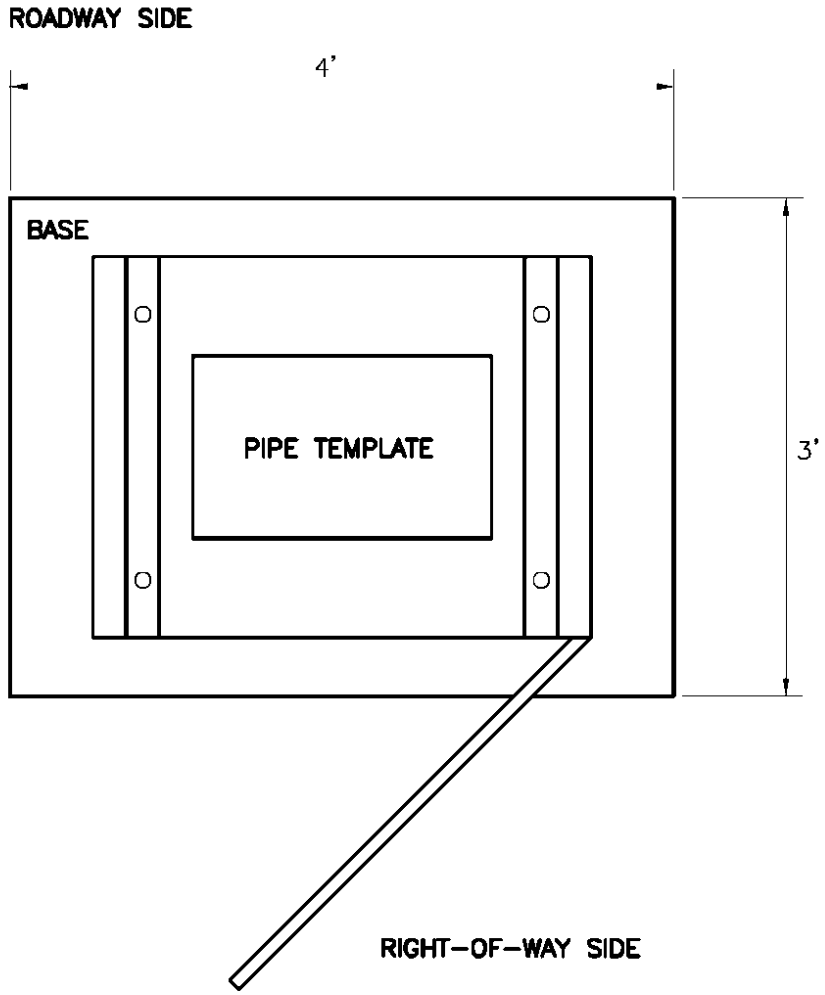

MANATEE COUNTY TRANSPORTATION DEPARTMENT			CONTROLLER CABINET BASE	505.0
REV.BY	DATE	6/12/07 DATE OF B.O.C.C. APPROVAL		

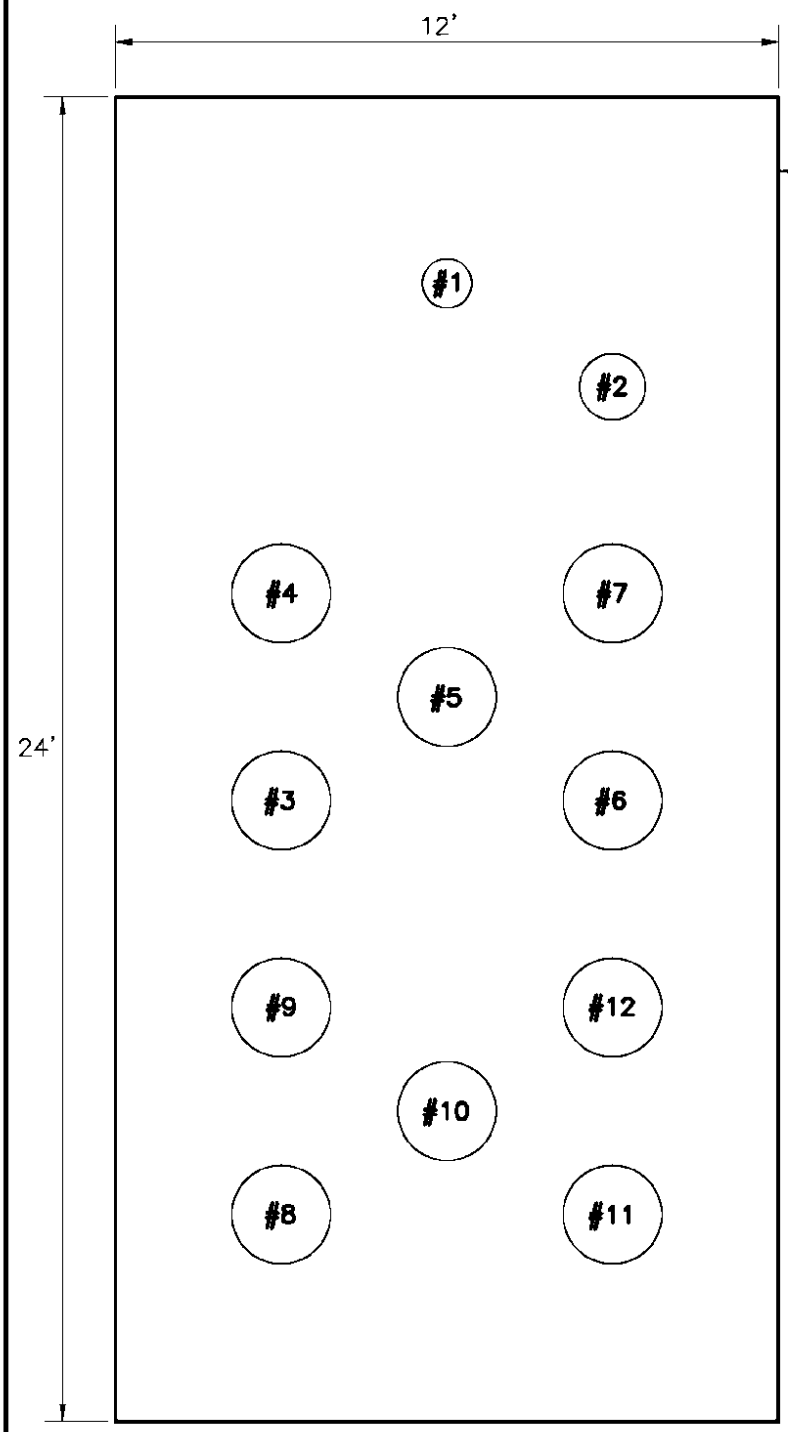

#1 – 1/2" PVC GROUND
#2 – 1" RIGID SERVICE
#3 – 2" SIGNAL
#4 – 2" SIGNAL
#5 – 2" SIGNAL
#6 – 2" SIGNAL
#7 – 2" SIGNAL (SPARE)
#8 – 2" LOOPS
#9 – 2" LOOPS
#10 – 2" LOOP (SPARE)
#11 – 2" INTERCONNECT
#12 – 2" INTERCONNECT (SPARE)

SPARES ARE TO BE STUBBED INTO PROPER PULL BOX.

MANATEE COUNTY TRANSPORTATION DEPARTMENT			CONTROLLER CABINET BASE PIPE LAYOUT	506.0
REV.BY	DATE	6/12/07 DATE OF B.O.C.C. APPROVAL		

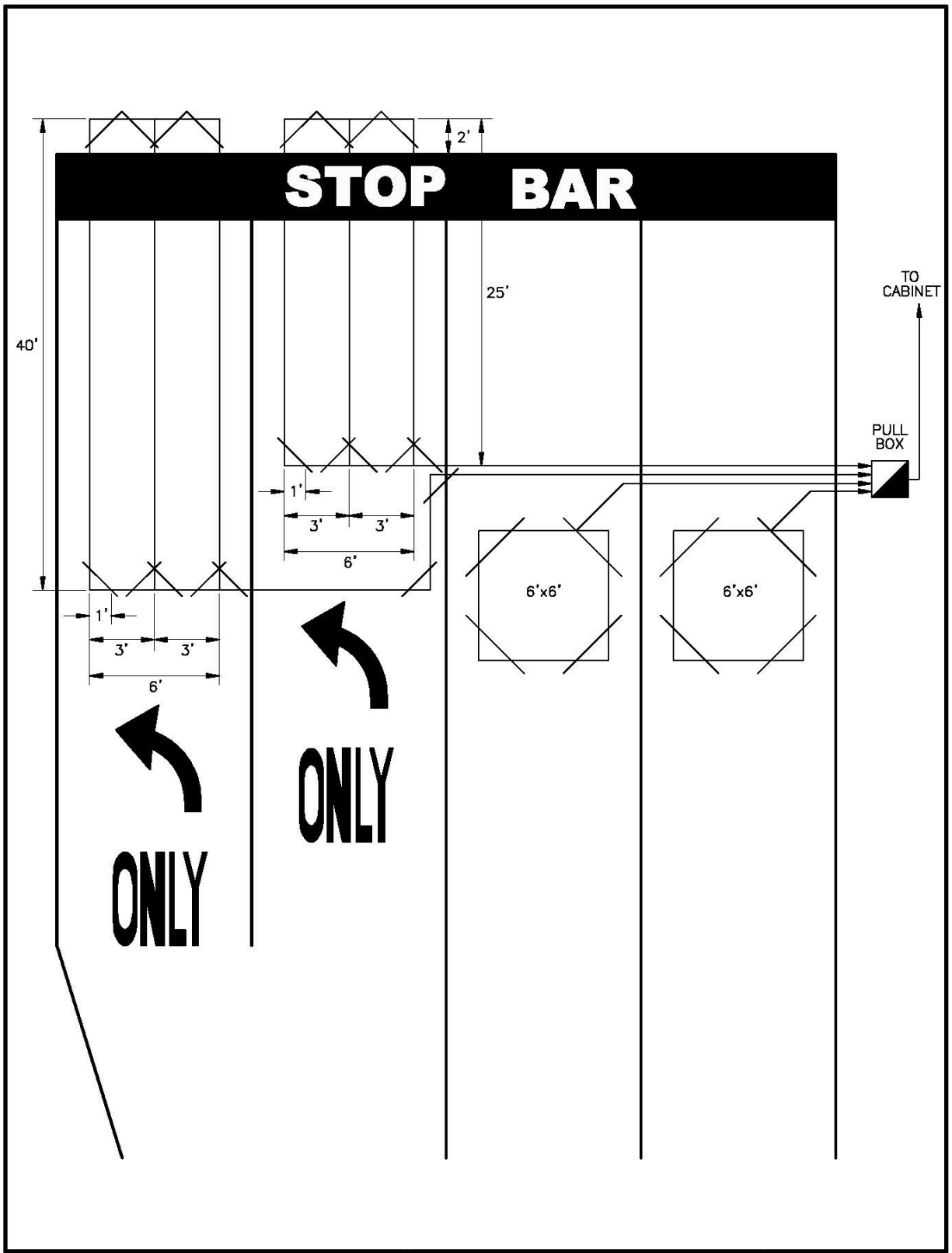

MANATEE COUNTY TRANSPORTATION DEPARTMENT			TYPICAL DETECTOR LOOP & PULL BOX LOCATIONS	508.0
REV.BY	DATE	6/12/07 DATE OF B.O.C.C. APPROVAL		

1) LEAD–IN FROM TOP.
2) THREE TURNS OF XHHW PER LOOP.

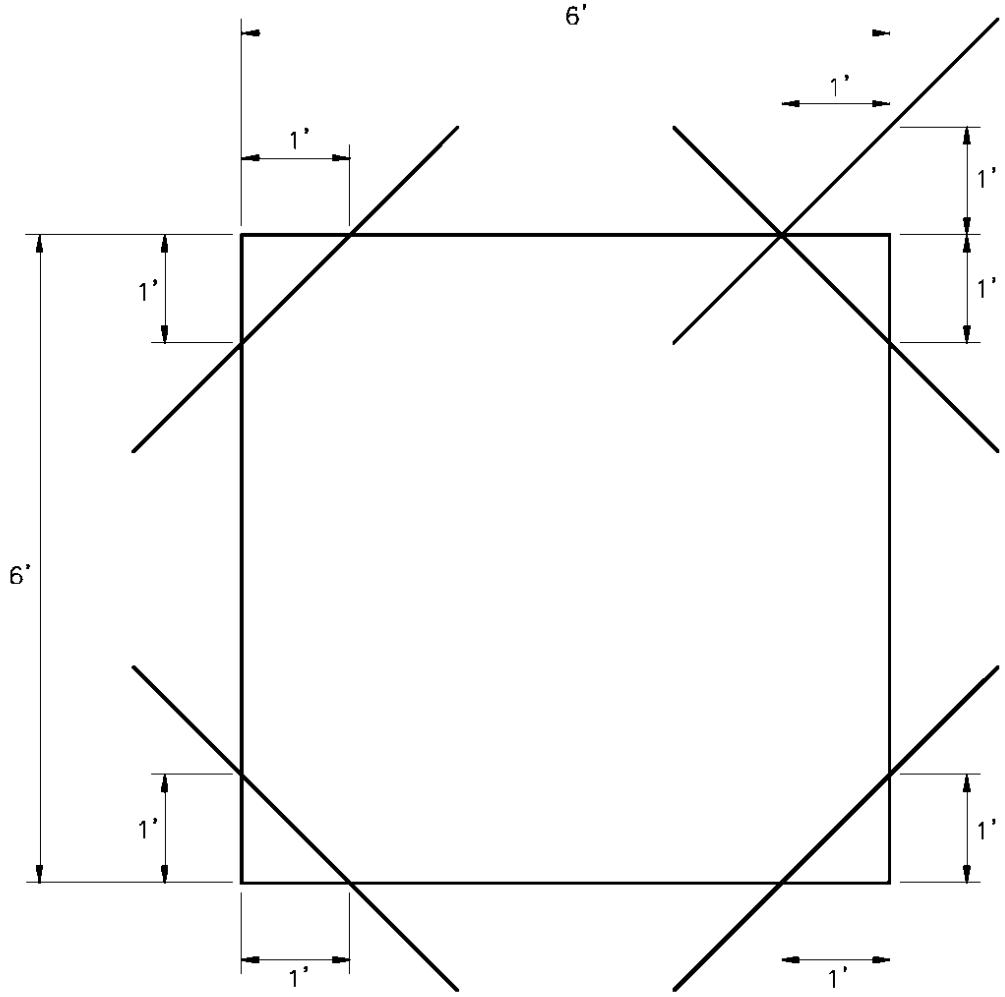

MANATEE COUNTY TRANSPORTATION DEPARTMENT			TYPE "B" 6'x6' DETECTOR LOOP	509.0
REV.BY	DATE	6/12/07 DATE OF B.O.C.C. APPROVAL		

DISTANCE FROM STOP BAR

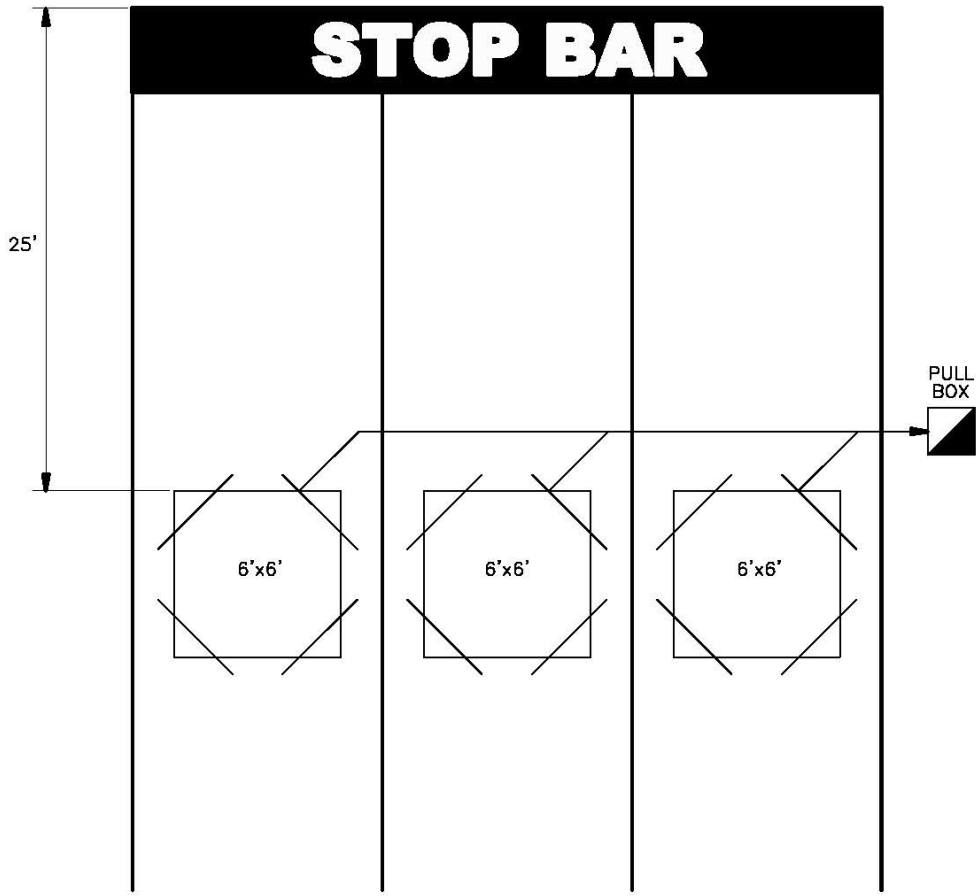

MANATEE COUNTY TRANSPORTATION DEPARTMENT			TYPE "B" DETECTOR LOOP DIMENSIONS	510.0
REV.BY	DATE			
		6/12/07 DATE OF B.O.C.C. APPROVAL		

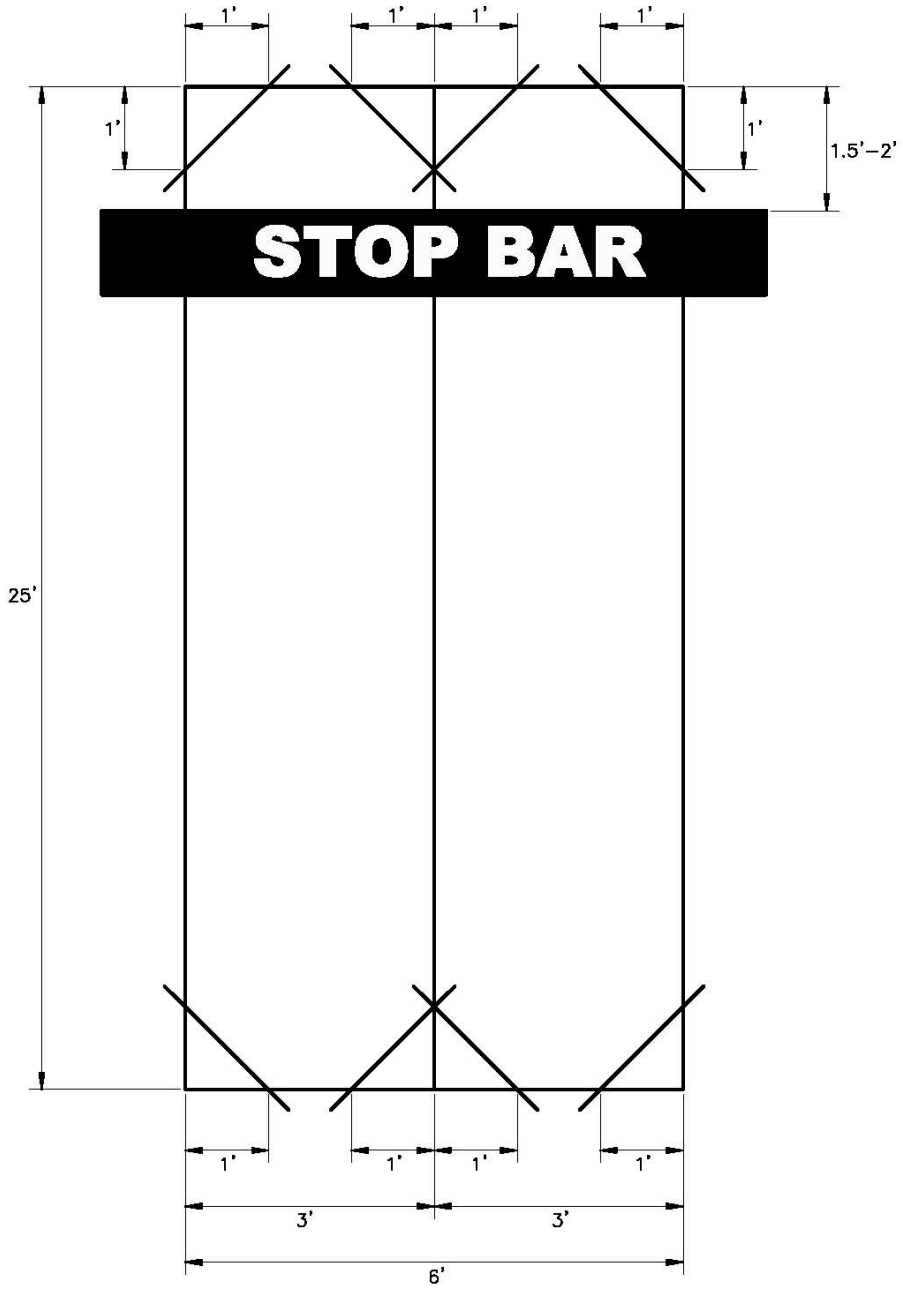

MANATEE COUNTY TRANSPORTATION DEPARTMENT			TYPE "F" 6'x25' DETECTOR LOOP DIMENSIONS	511.0
REV.BY	DATE			
		6/12/07 DATE OF B.O.C.C. APPROVAL		

TYPE "F" 6'x25' DETECTOR LOOP WIRING DIAGRAM

1) TYPE "F" LOOP WITH LEAD-IN FROM CENTER.
2) FOUR WIRES IN CENTER SLOT MUST GO IN SAME DIRECTION.
3) TWO WIRES IN OUTSIDE SLOTS MUST GO IN SAME DIRECTION.

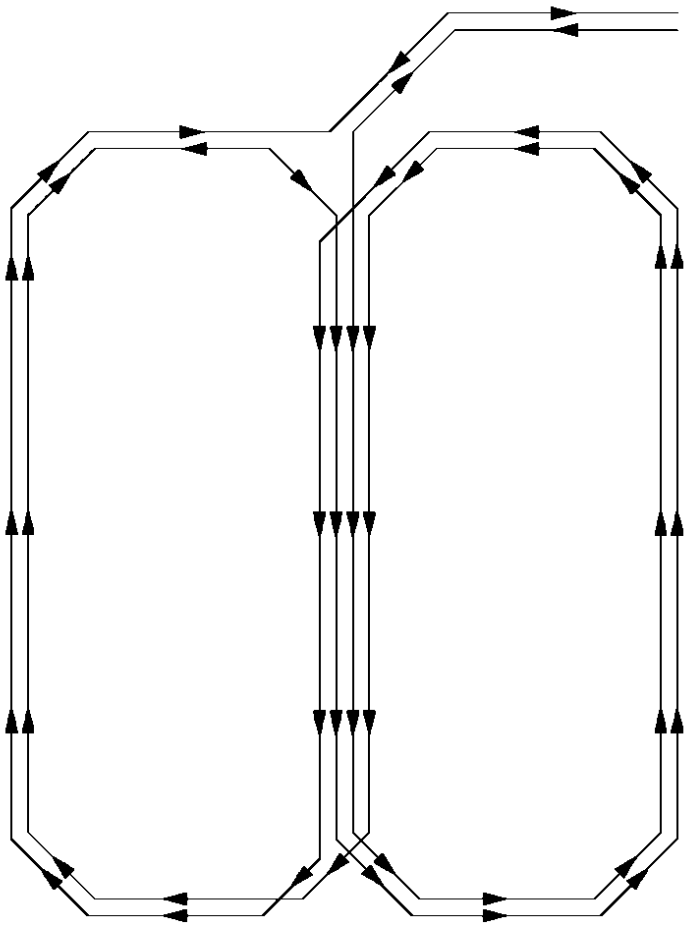

MANATEE COUNTY TRANSPORTATION DEPARTMENT			TYPE "F" 6'x25' DETECTOR LOOP WIRING DIAGRAM	512.0
REV.BY	DATE			
		6/12/07 DATE OF B.O.C.C. APPROVAL		

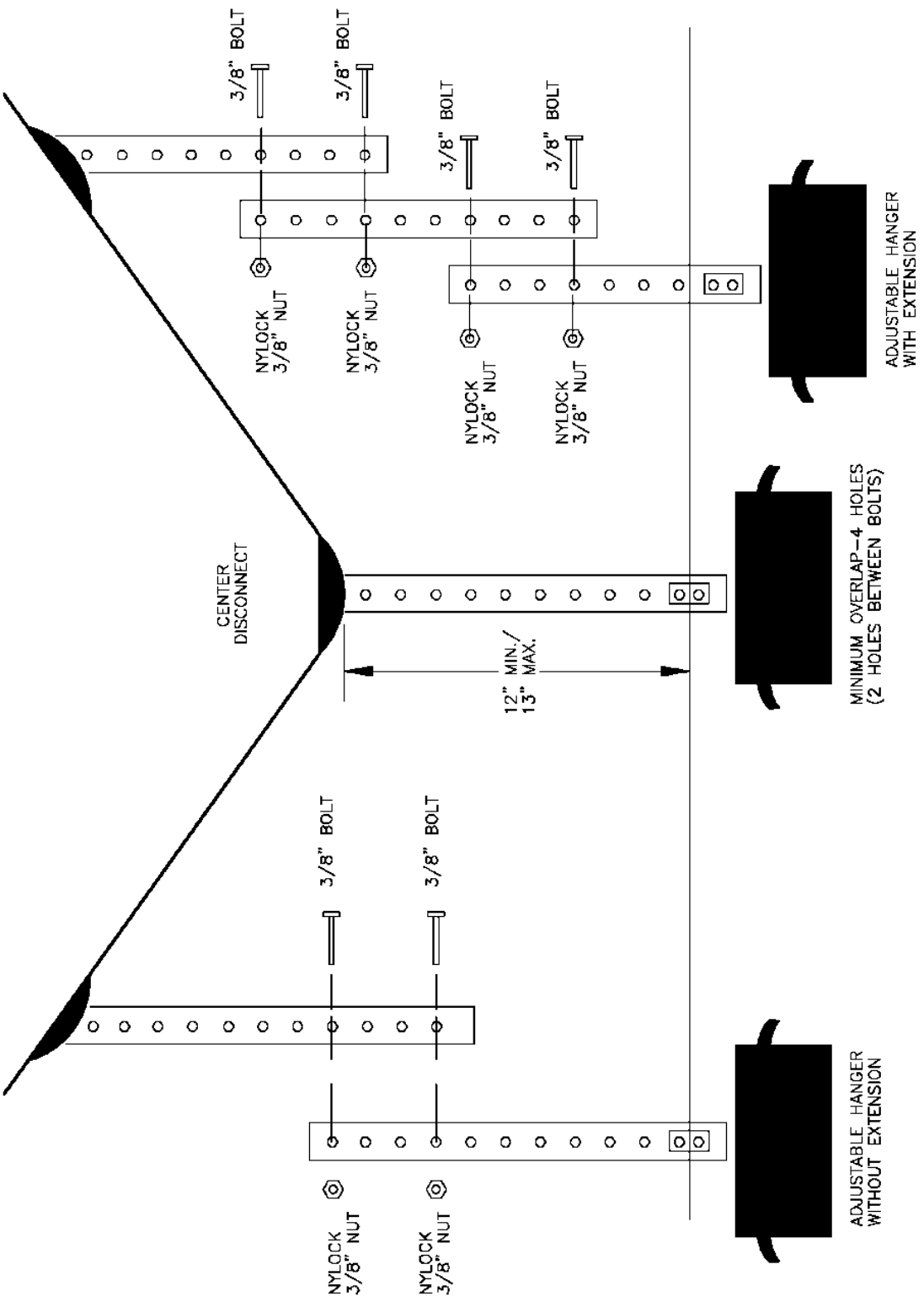

MANATEE COUNTY TRANSPORTATION DEPARTMENT			DISCONNECT HANGER INSTALLATION	516.0
REV.BY	DATE	6/12/07 DATE OF B.O.C.C. APPROVAL		

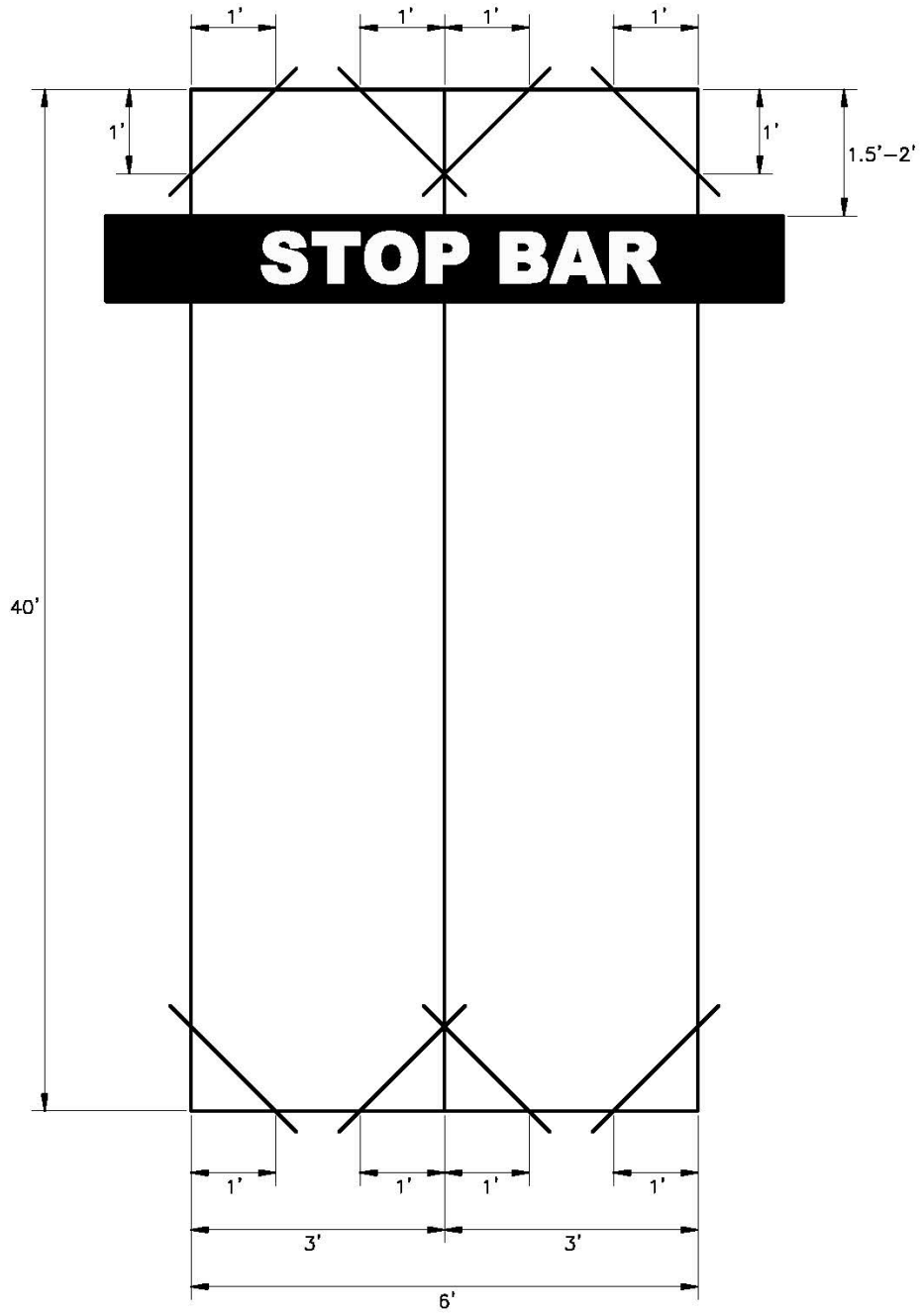

MANATEE COUNTY TRANSPORTATION DEPARTMENT			TYPE "F" 6'x40' DETECTOR LOOP DIMENSIONS	513.0
REV.BY	DATE			
		6/12/07		

TYPE "F" 6'x40' DETECTOR LOOP WIRING DIAGRAM

1) TYPE "F" LOOP WITH LEAD-IN FROM CENTER.
2) TWO WIRES IN CENTER SLOT MUST GO IN SAME DIRECTION.
3) ONE WIRE IN OUTSIDE SLOTS MUST GO IN SAME DIRECTION.

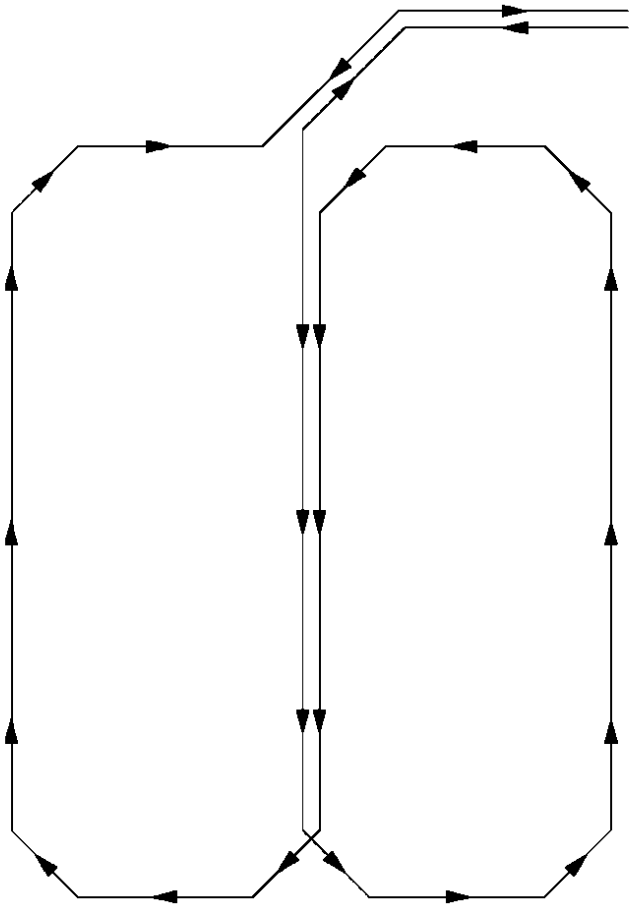

MANATEE COUNTY TRANSPORTATION DEPARTMENT			TYPE "F" 6'x40' DETECTOR LOOP WIRING DIAGRAM	514.0
REV.BY	DATE			
		6/12/07 DATE OF B.O.C.C. APPROVAL		

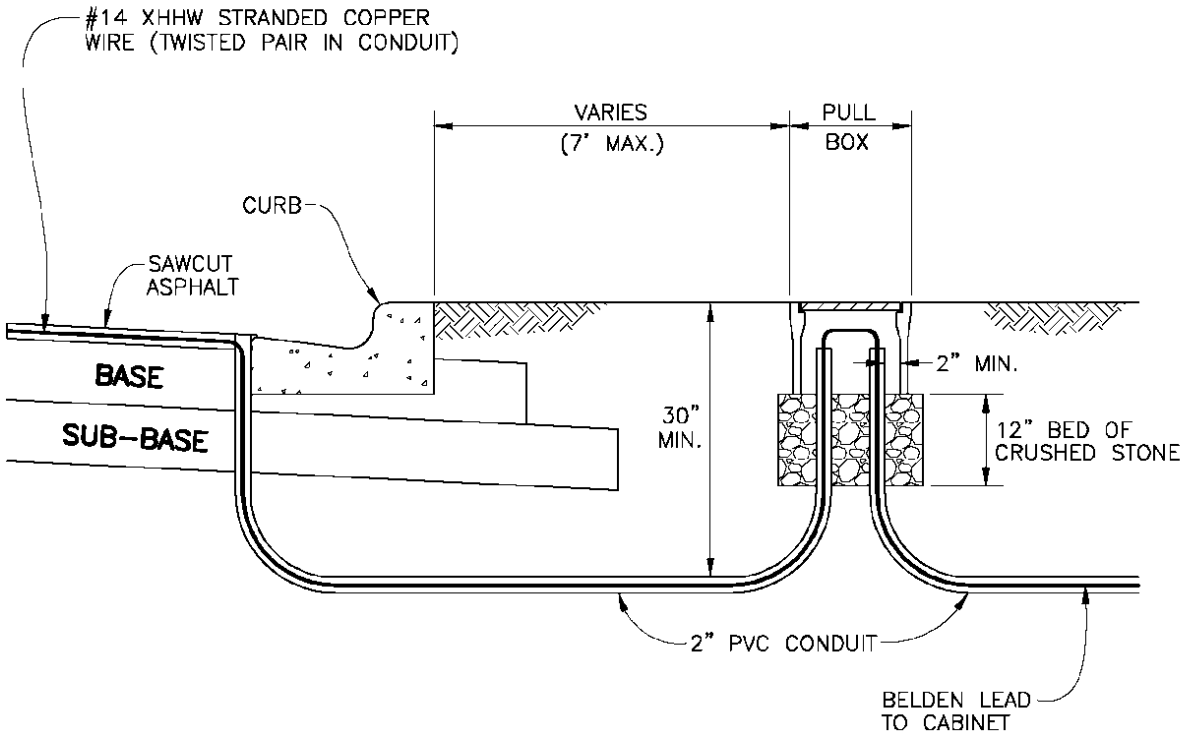

MANATEE COUNTY TRANSPORTATION DEPARTMENT			DETECTOR LOOP LEAD-IN INSTALLATION	515.0
REV.BY	DATE	6/12/07 DATE OF B.O.C.C. APPROVAL		

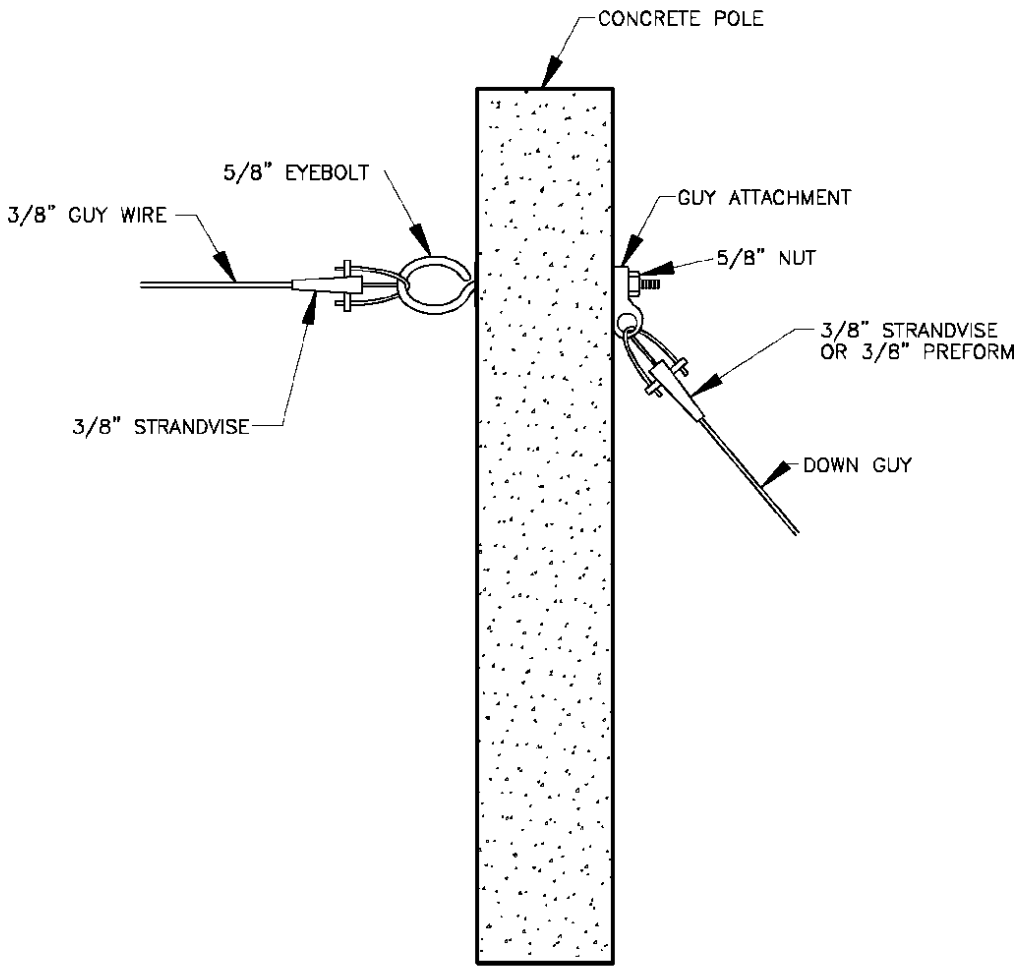

MANATEE COUNTY TRANSPORTATION DEPARTMENT			DOWN GUY INSTALLATION FOR CONCRETE POLE	517.0
REV.BY	DATE	6/12/07 DATE OF B.O.C.C. APPROVAL		

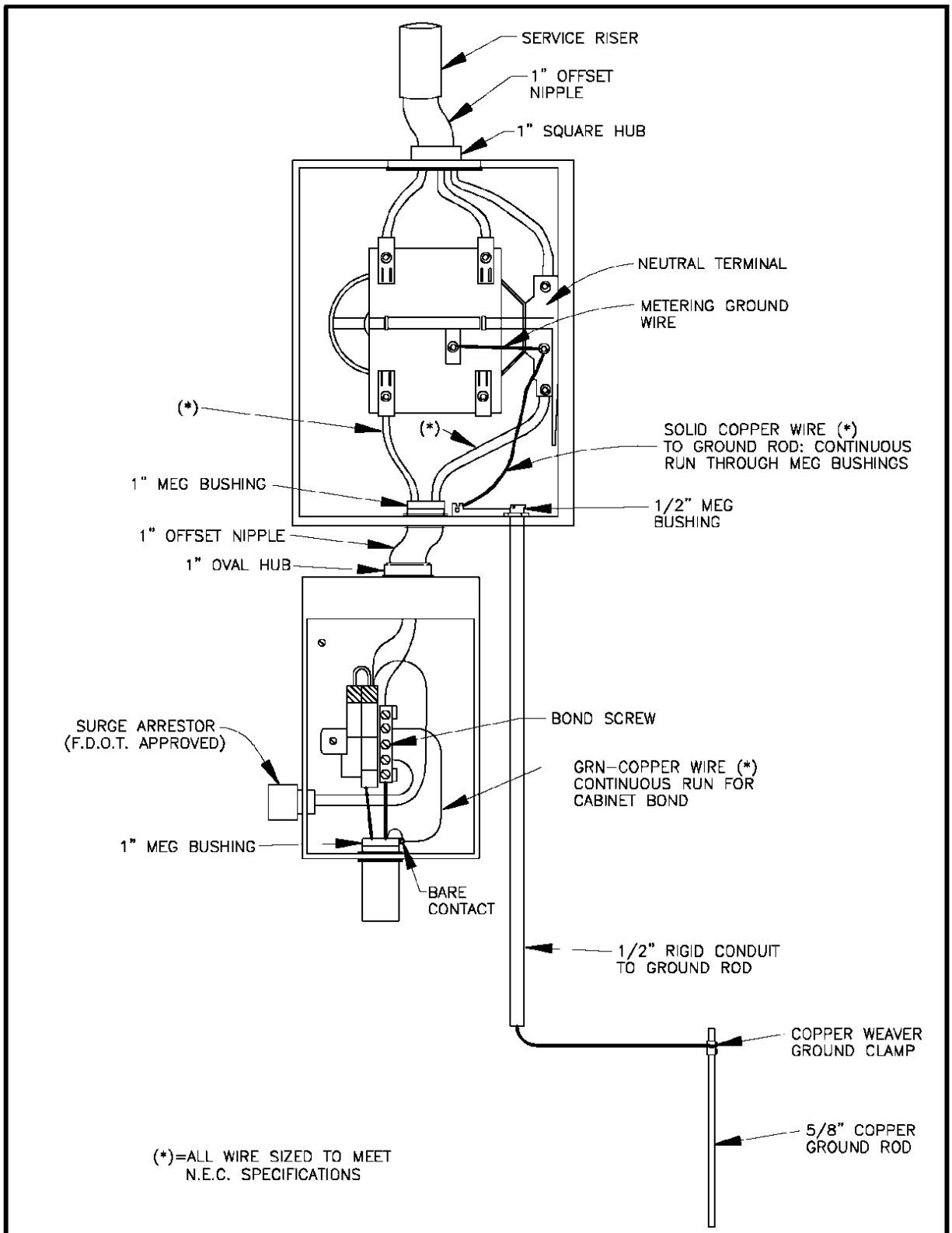

MANATEE COUNTY TRANSPORTATION DEPARTMENT			METER ELECTRICAL SERVICE INSTALLATION	518.0
REV.BY	DATE			
		6/12/07 DATE OF B.O.C.C. APPROVAL		

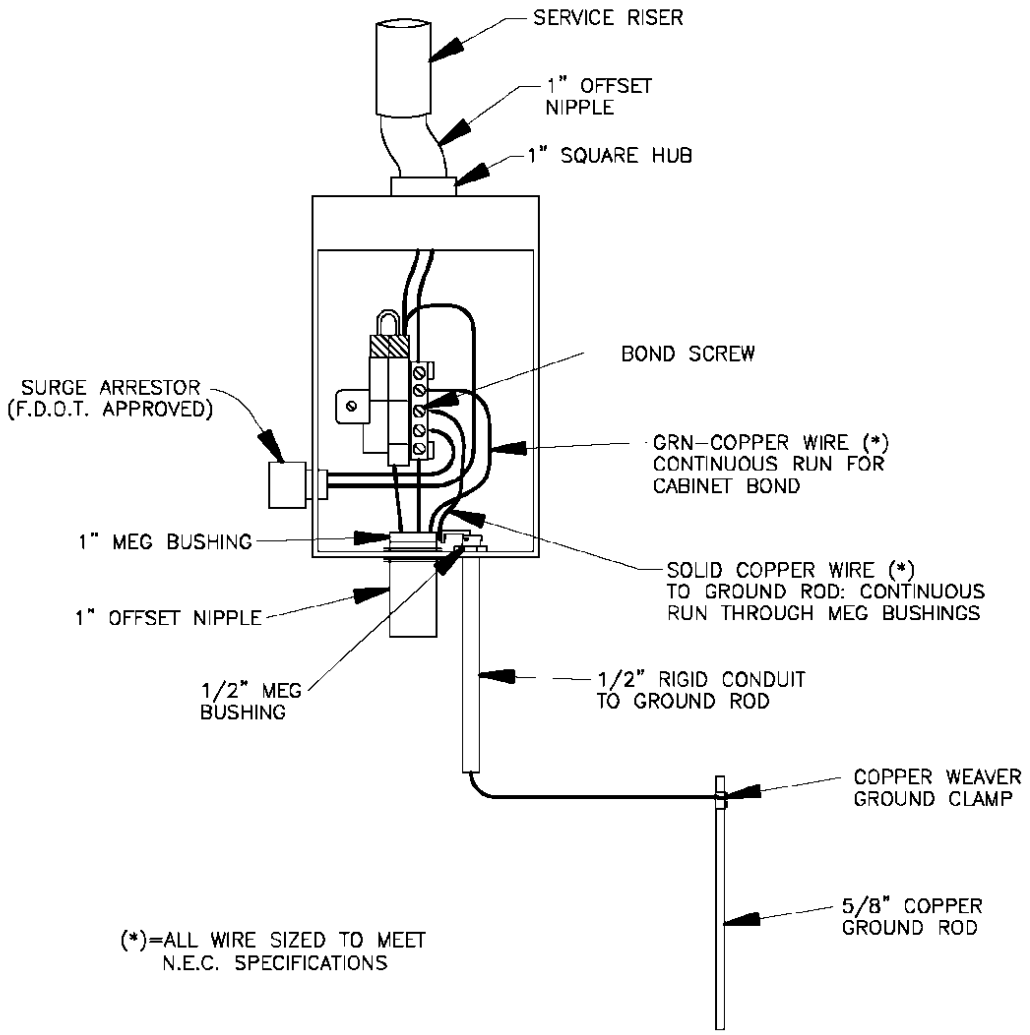

MANATEE COUNTY TRANSPORTATION DEPARTMENT			DISCONNECT ELECTRICAL SERVICE INSTALLATION	519.0
REV.BY	DATE	6/12/07 DATE OF B.O.C.C. APPROVAL		

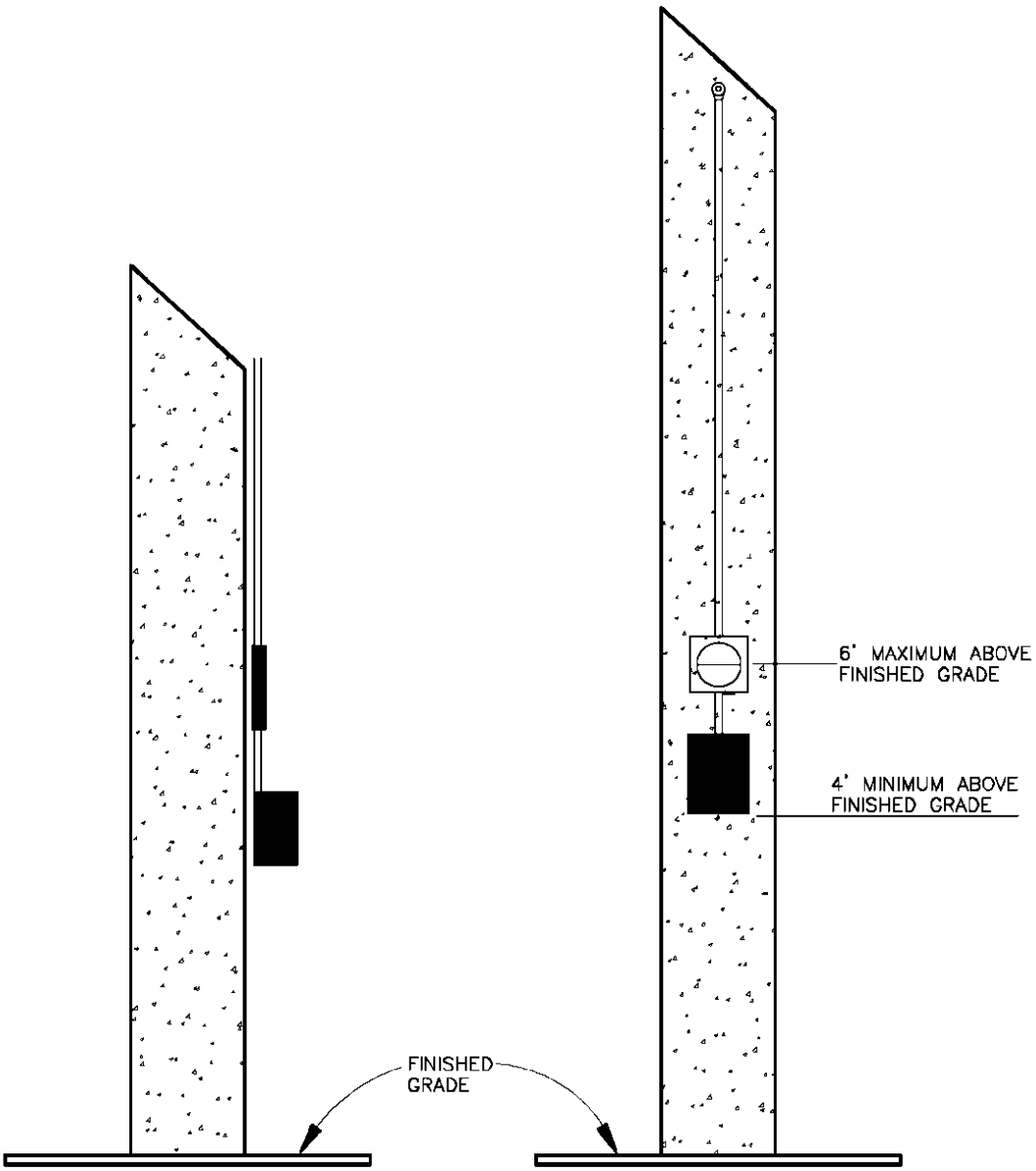

MANATEE COUNTY TRANSPORTATION DEPARTMENT			METER INSTALLATION HEIGHT REQUIREMENTS	520.0
REV.BY	DATE			
		6/12/07 DATE OF B.O.C.C. APPROVAL		

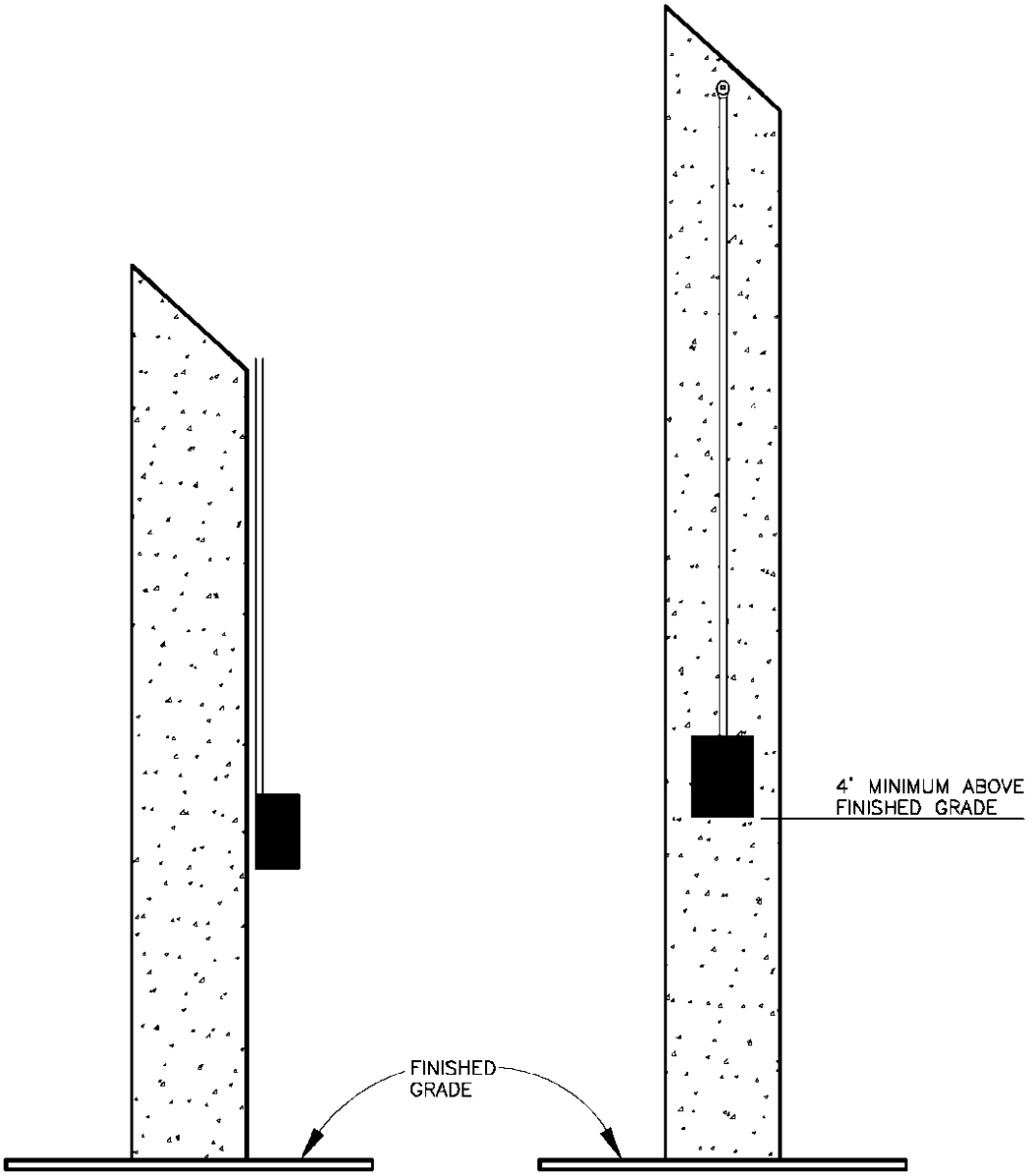

MANATEE COUNTY TRANSPORTATION DEPARTMENT			DISCONNECT INSTALLATION HEIGHT REQUIREMENTS	521.0
REV.BY	DATE	6/12/07 DATE OF B.O.C.C. APPROVAL		

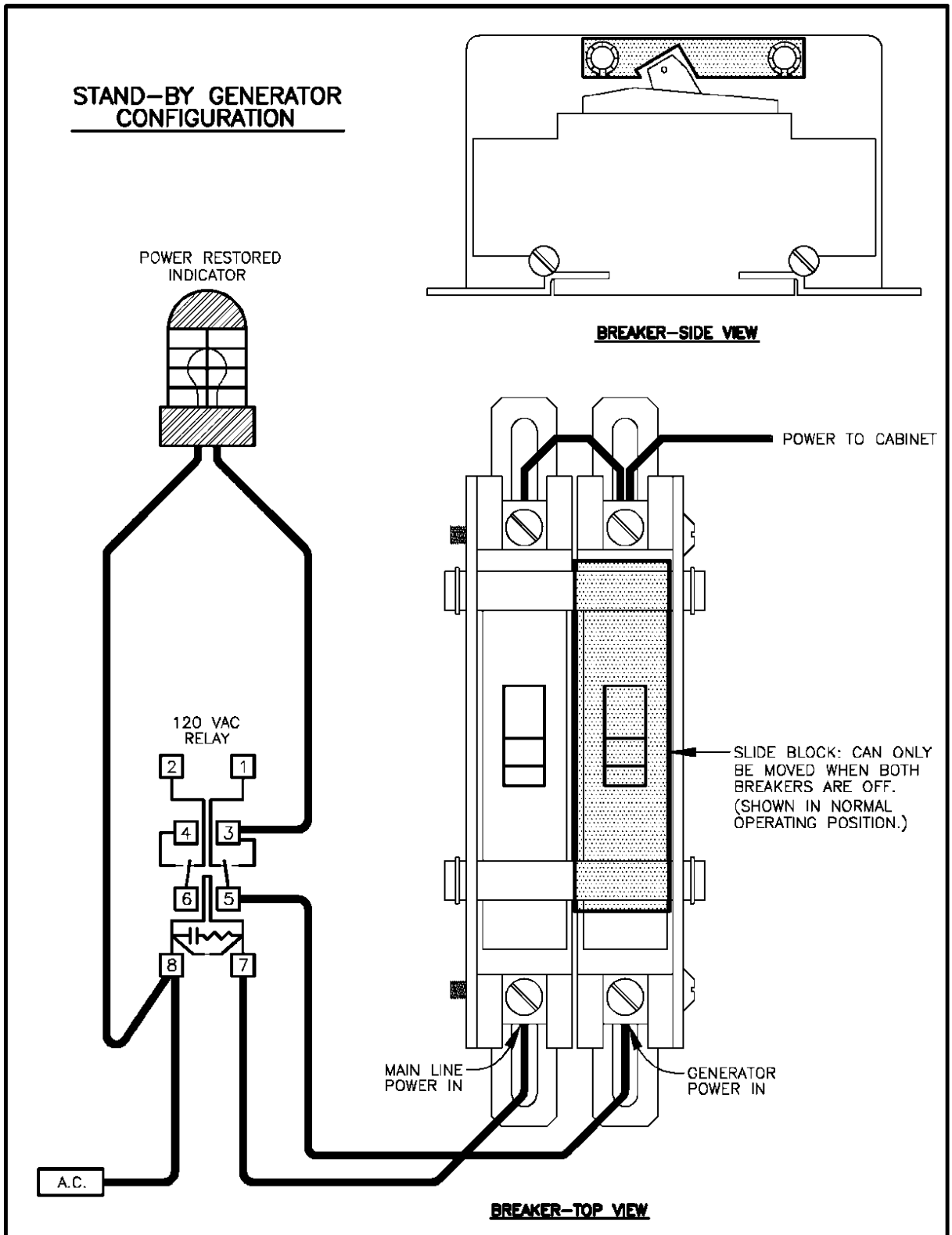

MANATEE COUNTY TRANSPORTATION DEPARTMENT			ALT. POWER SUPPLY REQUIREMENTS UPS/GENERATOR	522.1
REV.BY	DATE	6/12/07 DATE OF B.O.C.C. APPROVAL		

GENERATOR BASE DETAIL SHEET

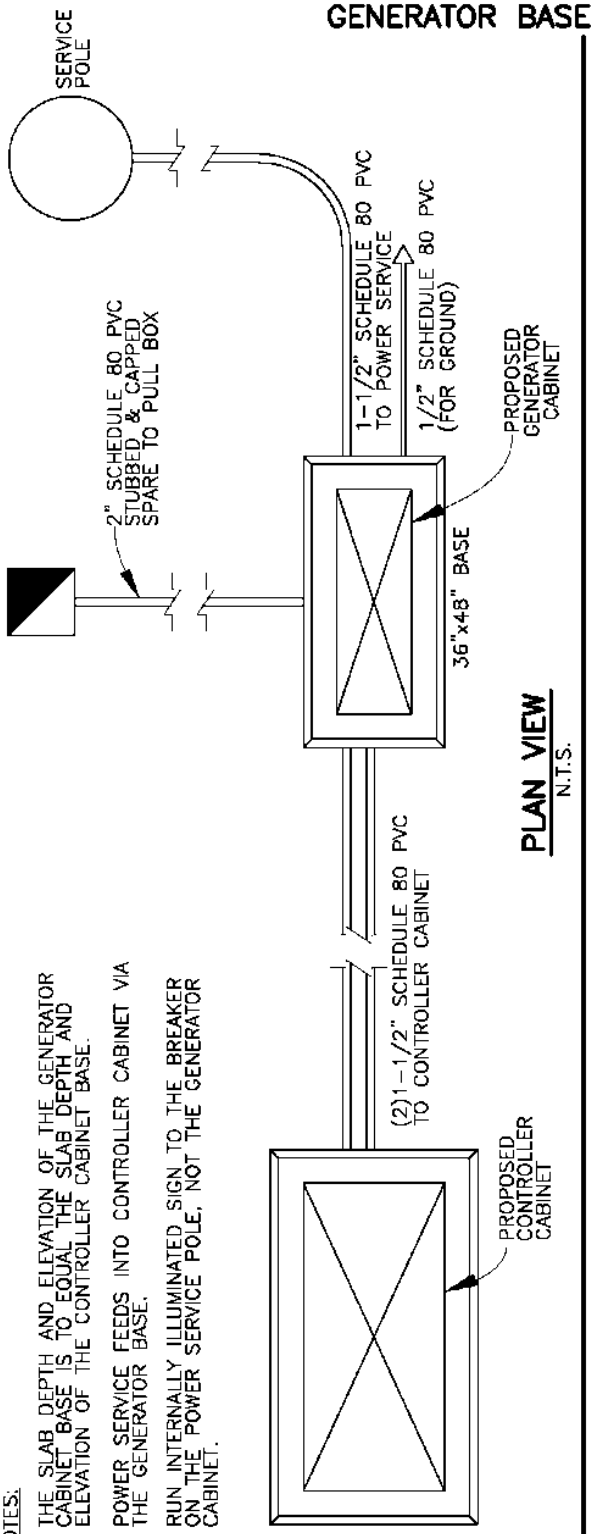

PLAN VIEW
N.T.S.

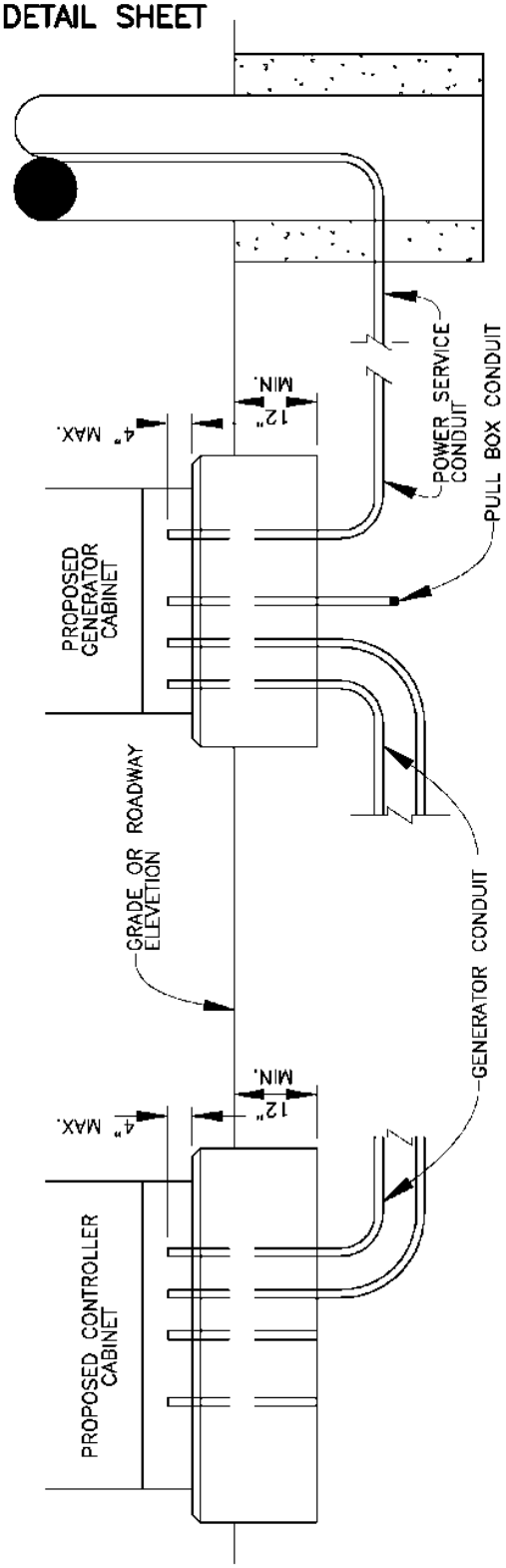

ELEVATION VIEW
N.T.S.

NOTES:

THE SLAB DEPTH AND ELEVATION OF THE GENERATOR CABINET BASE IS TO EQUAL THE SLAB DEPTH AND ELEVATION OF THE CONTROLLER CABINET BASE.

POWER SERVICE FEEDS INTO CONTROLLER CABINET VIA THE GENERATOR BASE.

RUN INTERNALLY ILLUMINATED SIGN TO THE BREAKER ON THE POWER SERVICE POLE, NOT THE GENERATOR CABINET.

MANATEE COUNTY TRANSPORTATION DEPARTMENT			ALT. POWER SUPPLY REQUIREMENTS UPS/GENERATOR	522.2
REV.BY	DATE	6/12/07 DATE OF B.O.C.C. APPROVAL		

FIGURE 553-A

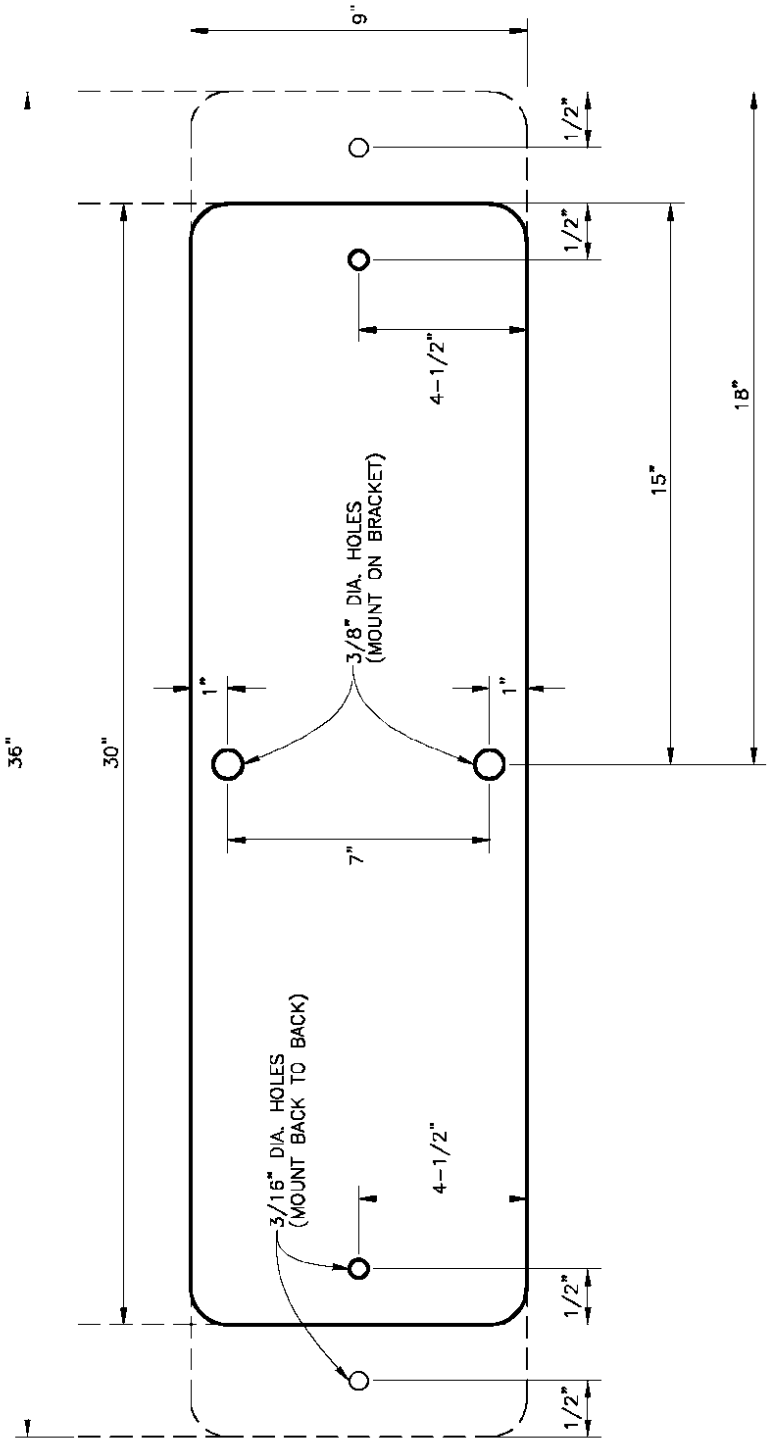

ALUMINUM STREET NAME SIGN BLANK

MANATEE COUNTY TRANSPORTATION DEPARTMENT			STREET NAME SIGNS (GROUND MOUNTED) HARDWARE/MATERIAL SPECIFICATIONS	553.2
REV.BY	DATE			
		6/12/07 DATE OF B.O.C.C. APPROVAL		

FIGURE 553-B

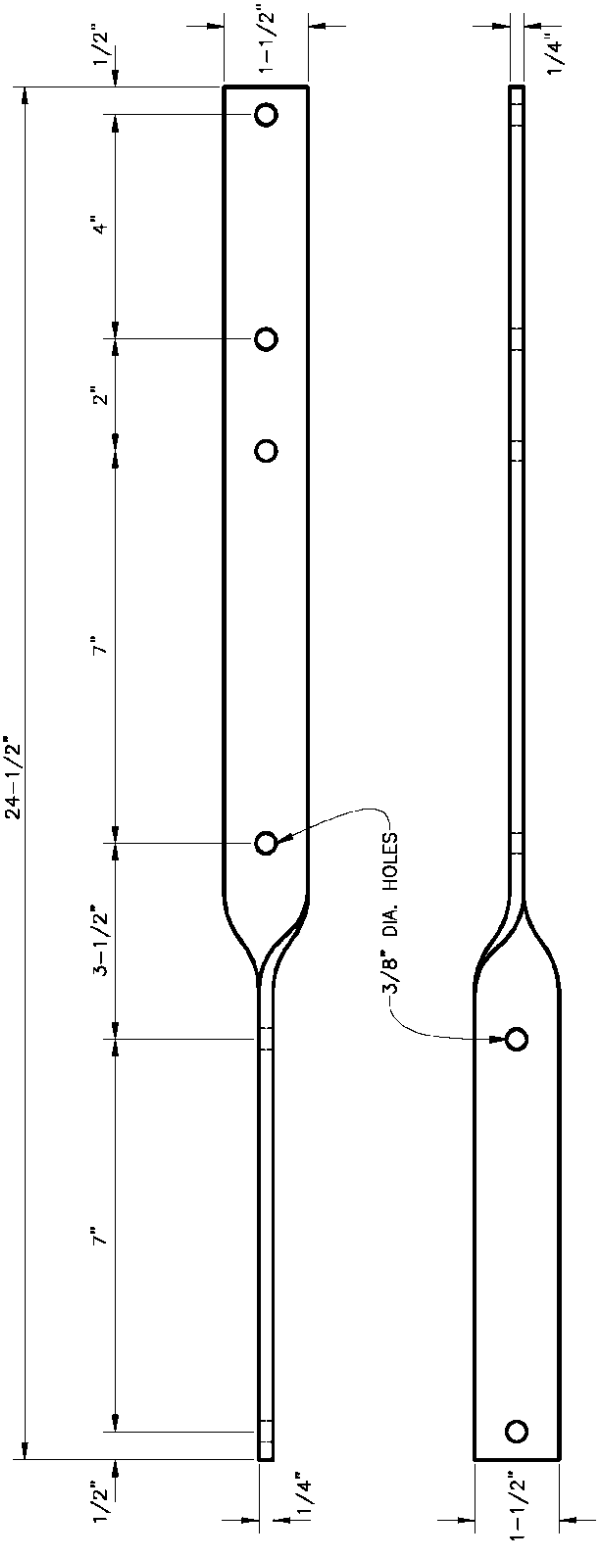

GALVANIZED STEEL STREET NAME SIGN BRACKET

MANATEE COUNTY TRANSPORTATION DEPARTMENT			STREET NAME SIGNS (GROUND MOUNTED) HARDWARE/MATERIAL SPECIFICATIONS	553.3
REV.BY	DATE			
		6/12/07 DATE OF B.O.C.C. APPROVAL		

APPENDIX C: DRAINAGE DETAILS

INDEX

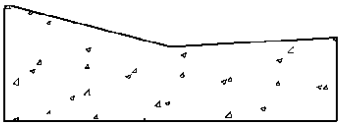

TYPE "A"
MIAMI CURB & GUTTER
STD. 201.1

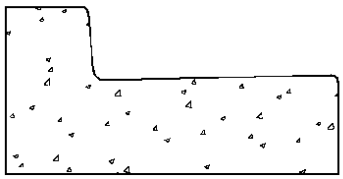

TYPE "F"
CURB & GUTTER
STD. 201.2

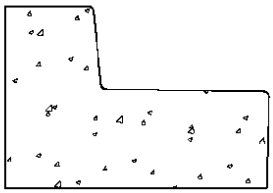

TYPE "AB"
MODIFIED CURB & GUTTER
STD. 201.3

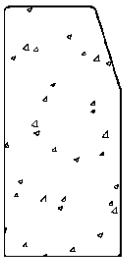

TYPE "D"
CURB
STD. 201.4

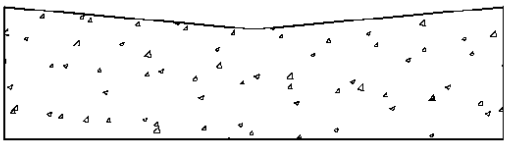

INVERTED CROWN
CURB & GUTTER
STD. 201.5

1. ALL CURB & GUTTER SHALL PROVIDE A 0.125" TO 0.25" CONTRACTION JOINT AT 10' CENTERS.
2. ALL CURB & GUTTER SHALL BE CONSTRUCTED IN COMPLIANCE WITH FLORIDA D.O.T. STANDARD SPECIFICATIONS PER F.D.O.T. ROADWAY AND TRAFFIC DESIGN STANDARDS INDEX NO. 300, LATEST REVISION.
3. TOP OF FINISHED PAVEMENT SHALL BE 0.25" ABOVE LIP OF GUTTER, LOW SIDE.

MANATEE COUNTY TRANSPORTATION DEPARTMENT			CURB & GUTTER CONTROL SHEET	201.0
REV.BY	DATE	6/12/07 DATE OF B.O.C.C. APPROVAL		

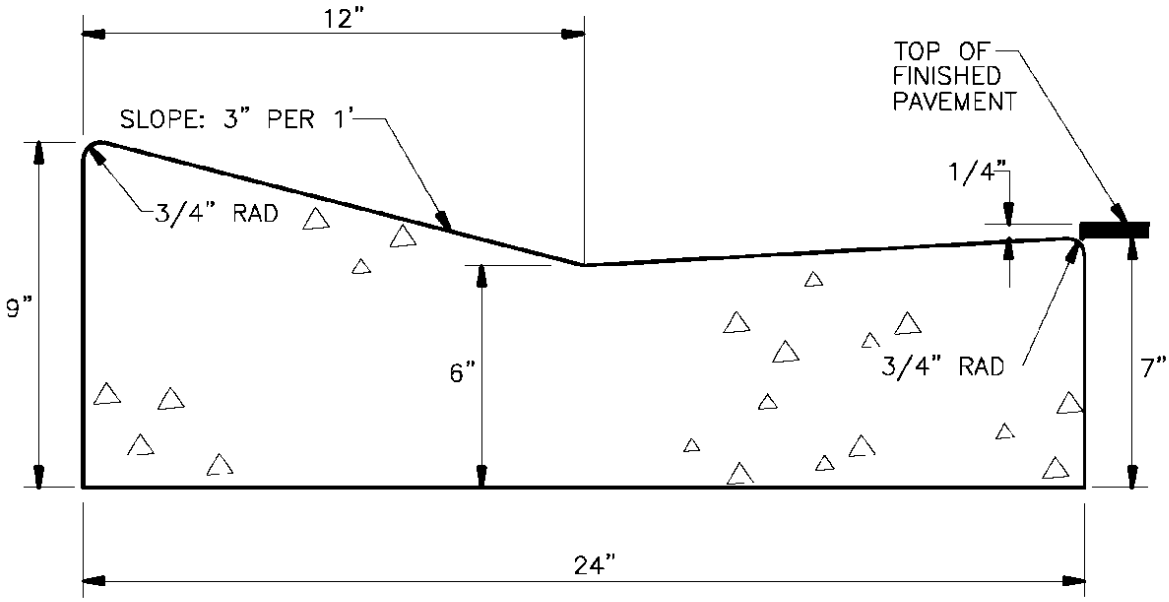

TYPE "A"
MIAMI CURB & GUTTER

A) CLASS 1 CONCRETE 3,000 P.S.I. AT 28 DAYS.

B) CURB AND GUTTER SHALL MEET THE SPECIFICATIONS ESTABLISHED BY FLORIDA D.O.T. STANDARD SPECIFICATIONS PER F.D.O.T. ROADWAY AND TRAFFIC DESIGN STANDARDS INDEX NO. 300, LATEST REVISION.

MANATEE COUNTY TRANSPORTATION DEPARTMENT			TYPE A MIAMI CURB & GUTTER	201.1
REV.BY	DATE	6/12/07 DATE OF B.O.C.C. APPROVAL		

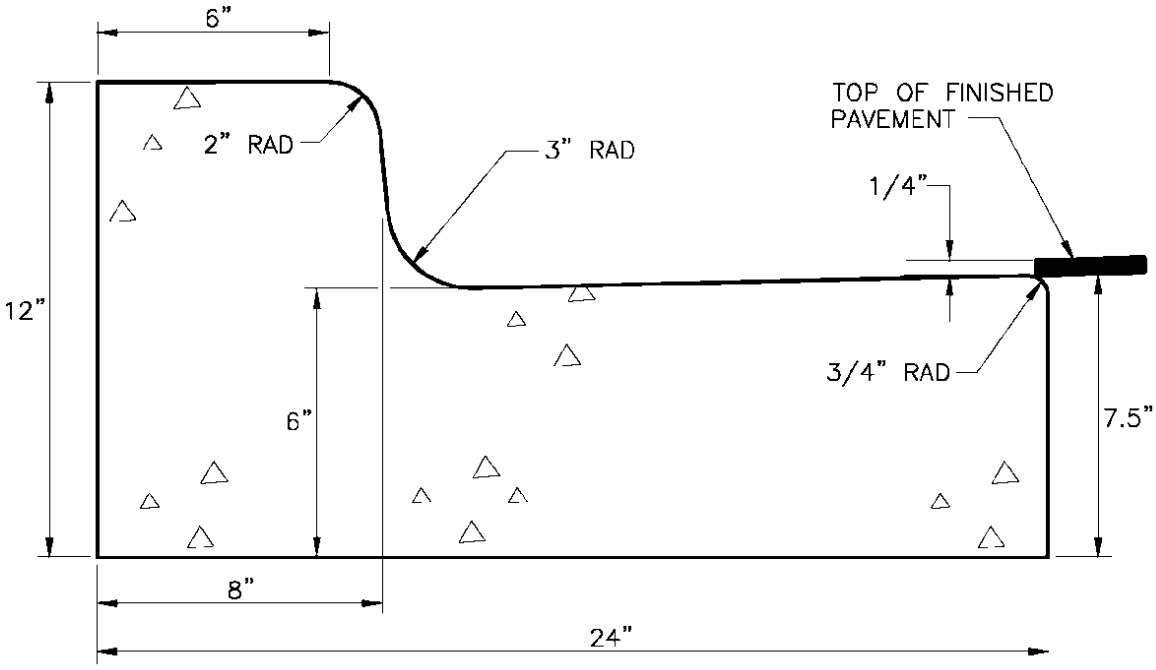

TYPE "F" BARRIER CURB & GUTTER

A) CLASS 1 CONCRETE 3,000 P.S.I. AT 28 DAYS.

B) CURB AND GUTTER SHALL MEET THE SPECIFICATIONS ESTABLISHED BY FLORIDA D.O.T. STANDARD SPECIFICATIONS PER F.D.O.T. ROADWAY AND TRAFFIC DESIGN STANDARDS INDEX NO. 300, LATEST REVISION.

MANATEE COUNTY TRANSPORTATION DEPARTMENT			TYPE F CURB & GUTTER	201.2
REV.BY	DATE	6/12/07 DATE OF B.O.C.C. APPROVAL		

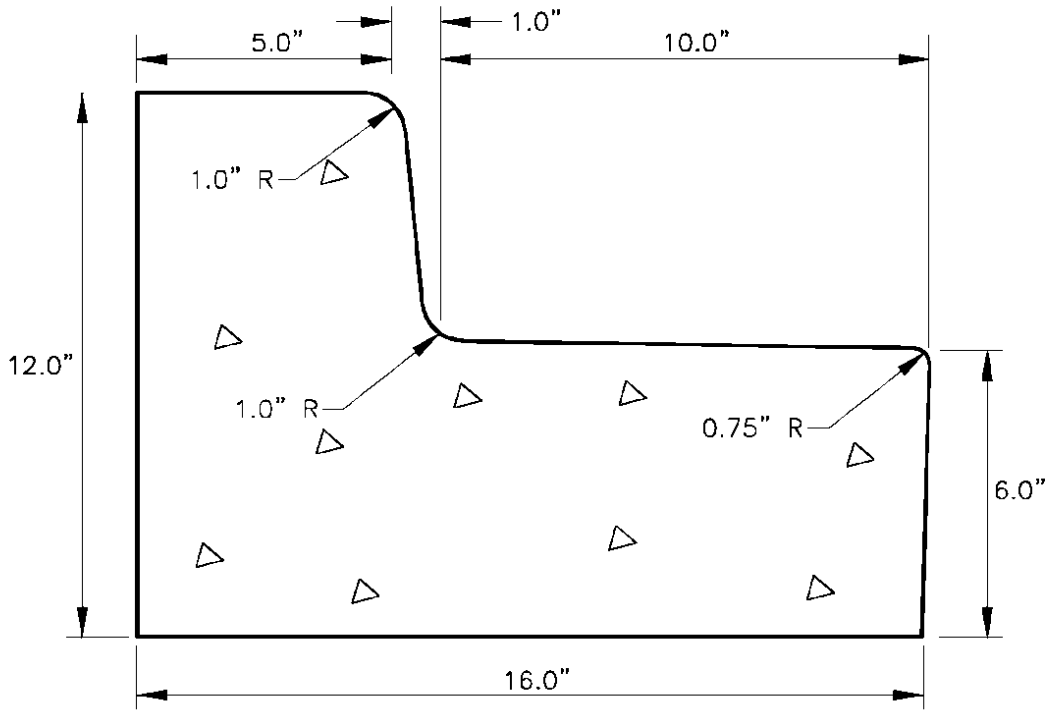

TYPE "AB"
MODIFIED CURB & GUTTER

A) CLASS 1 CONCRETE 3,000 PSI AT 28 DAYS.

B) CURB AND GUTTER SHALL MEET THE SPECIFICATIONS ESTABLISHED BY FLORIDA D.O.T. STANDARD SPECIFICATIONS PER F.D.O.T. ROADWAY AND TRAFFIC DESIGN STANDARDS STANDARDS INDEX NO. 300, LATEST REVISION.

MANATEE COUNTY TRANSPORTATION DEPARTMENT			TYPE "AB" MODIFIED CURB & GUTTER	201.3
REV.BY	DATE			
		6/12/07 DATE OF B.O.C.C. APPROVAL		

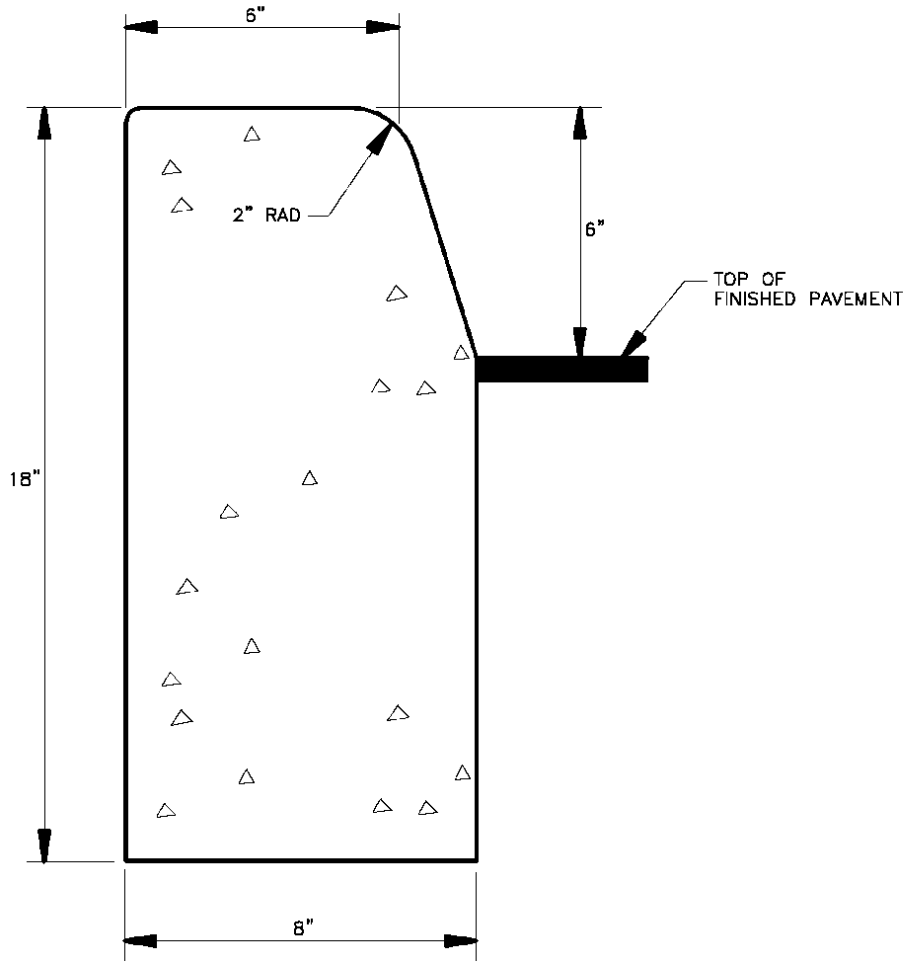

TYPE "D"
HIGH BACK CURB

A) CLASS 1 CONCRETE, 3,000 P.S.I. AT 28 DAYS.

B) CURB SHALL MEET THE SPECIFICATIONS ESTABLISHED BY F.D.O.T. STANDARD SPECIFICATIONS PER F.D.O.T. ROADWAY AND TRAFFIC DESIGN STANDARDS INDEX NO. 300, LATEST REVISION.

MANATEE COUNTY TRANSPORTATION DEPARTMENT			TYPE D CURB	201.4
REV.BY	DATE	6/12/07 DATE OF B.O.C.C. APPROVAL		

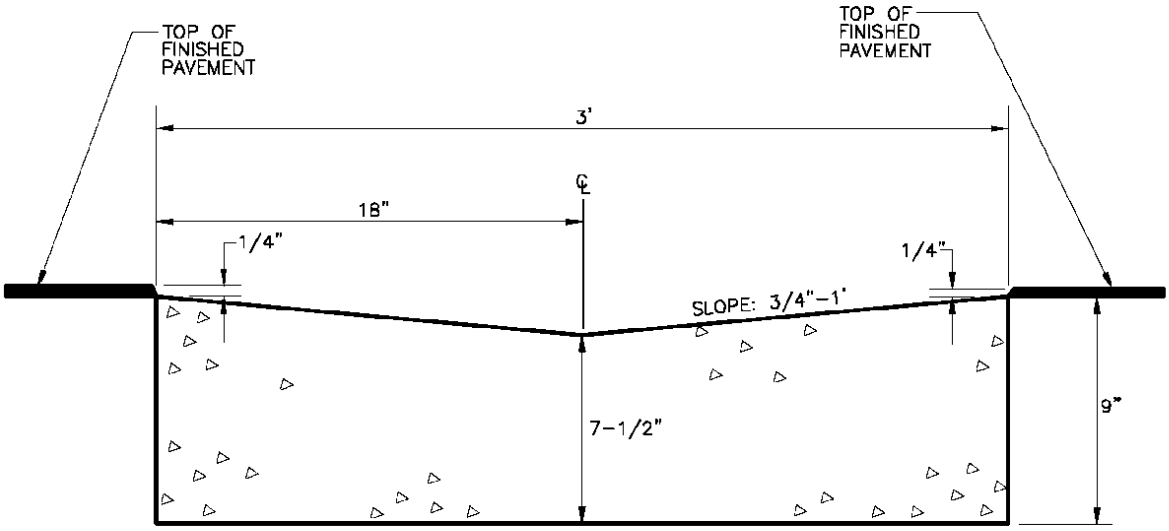

INVERTED CROWN GUTTER

A) CLASS 1 CONCRETE, 3,000 P.S.I. AT 28 DAYS.

B) CURB SHALL MEET SPECIFICATIONS ESTABLISHED BY FLORIDA D.O.T. STANDARD SPECIFICATIONS, PER F.D.O.T. ROADWAY AND TRAFFIC DESIGN STANDARDS INDEX NO. 300, LATEST REVISION.

C) SEE SHEET 401.9 FOR INVERTED CROWN APPLICATION.

NOTE: THIS TYPICAL SECTION SHALL BE CONSIDERED FOR PRIVATE ROAD USAGE ONLY! IT MUST BE APPROVED THRU THE PLANNING & TRANSPORTATION DEPARTMENTS, JOINTLY.

MANATEE COUNTY TRANSPORTATION DEPARTMENT			INVERTED CROWN	201.5
REV.BY	DATE			
		6/12/07 DATE OF B.O.C.C. APPROVAL		

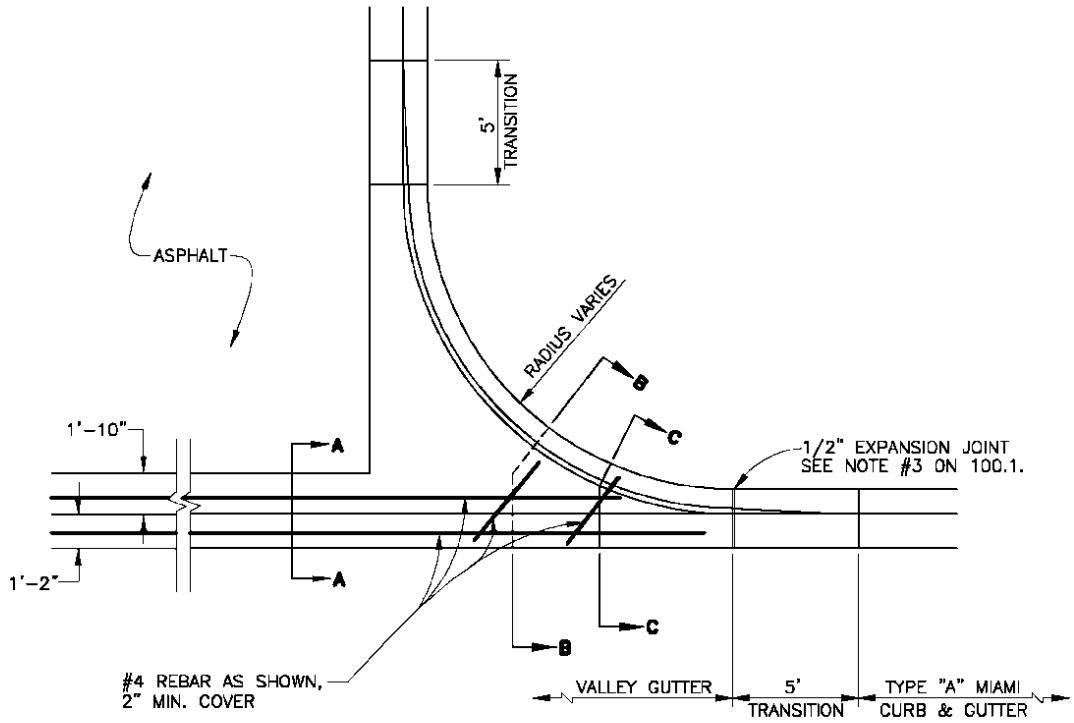

PLAN VIEW

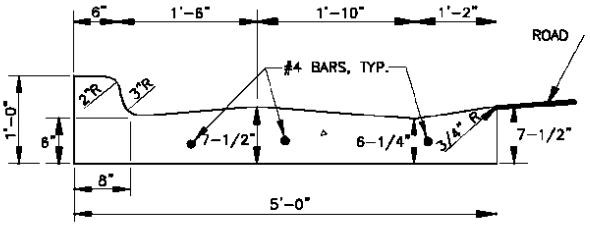

SECTION "B-B"

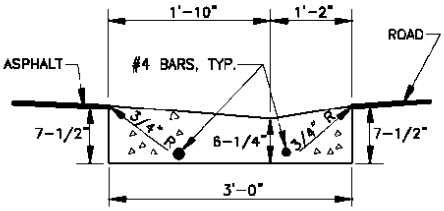

SECTION "A-A"

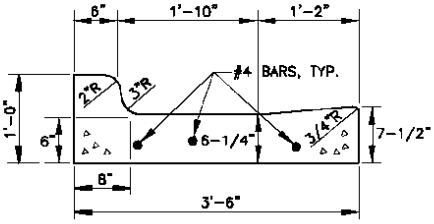

SECTION "C-C"

3' VALLEY CROSSING

* CLASS 1 CONCRETE, 3,000 P.S.I. AT 28 DAYS.

MANATEE COUNTY TRANSPORTATION DEPARTMENT			VALLEY CROSSING	201.6
REV.BY	DATE			
		6/12/07 DATE OF B.O.C.C. APPROVAL		

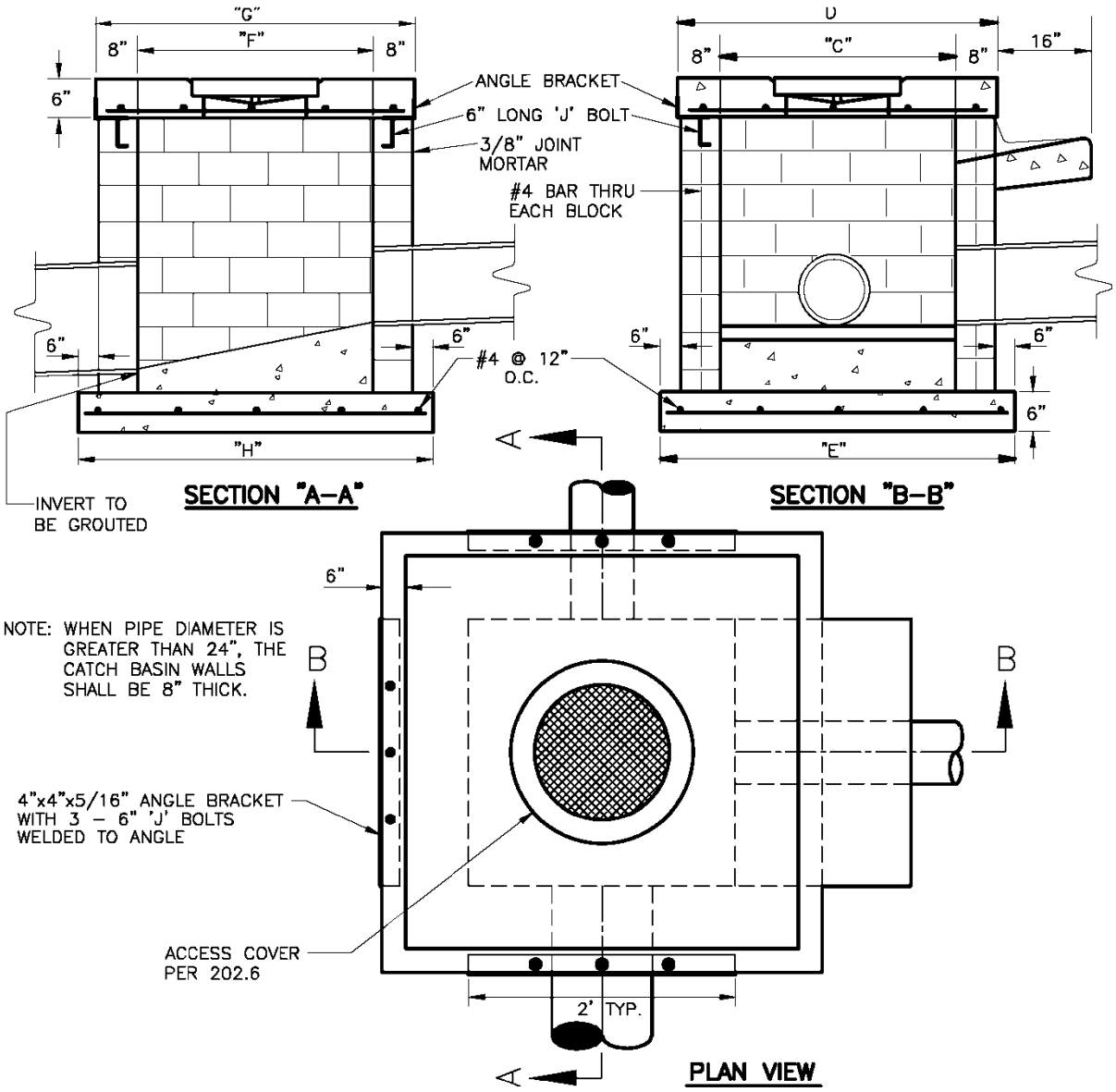

NOTE: WHEN PIPE DIAMETER IS GREATER THAN 24", THE CATCH BASIN WALLS SHALL BE 8" THICK.

4"x4"x5/16" ANGLE BRACKET WITH 3 – 6" 'J' BOLTS WELDED TO ANGLE

ACCESS COVER PER 202.6

NOTE: DIMENSIONS PER SECTION 202.0

A) THE FOLLOWING MATERIALS TO BE AS SPECIFIED IN THE FLORIDA D.O.T. SPEC'S. 1991, SECTION 346 CONCRETE, SECT. 962–8 IRON CASTING, SECT. 931–1 REINFORCEMENT STEEL, SECT. 425 INLETS, MANHOLES & JUNCTION BOXES.

B) FILL BLOCKS WITH 3,000 psi CONCRETE, USE #4 ROD IN EACH BLOCK, 16" O/C.

C) 2" MINIMUM COVER ON ALL REBAR.

D) USE #4 REBARS ON 6" CENTERS BOTH WAYS ON LID; NO.4 REBARS ON 12" CENTERS BOTH WAYS ON FLOOR SLAB.

E) SEE SHEET 202.0 FOR GENERAL NOTES AND DIMENSION INDEX.

F) ALL EXPOSED CORNERS AND EDGES TO BE CHAMFERED 3/4".

G) PRECAST BOXES AS SPECIFIED IN F.D.O.T. ROADWAY AND TRAFFIC DESIGN STANDARDS (2000) ARE AN ACCEPTABLE ALTERNATIVE AS APPROVED BY THE TRANSPORTATION DIRECTOR OR HIS DESIGNEE.

H) ALL PIPE ENTRIES TO CATCH BASIN TO BE GROUTED AND SEALED.

MANATEE COUNTY TRANSPORTATION DEPARTMENT			TYPICAL CONC. BLOCK BOX	202.1
REV.BY	DATE	6/12/07		

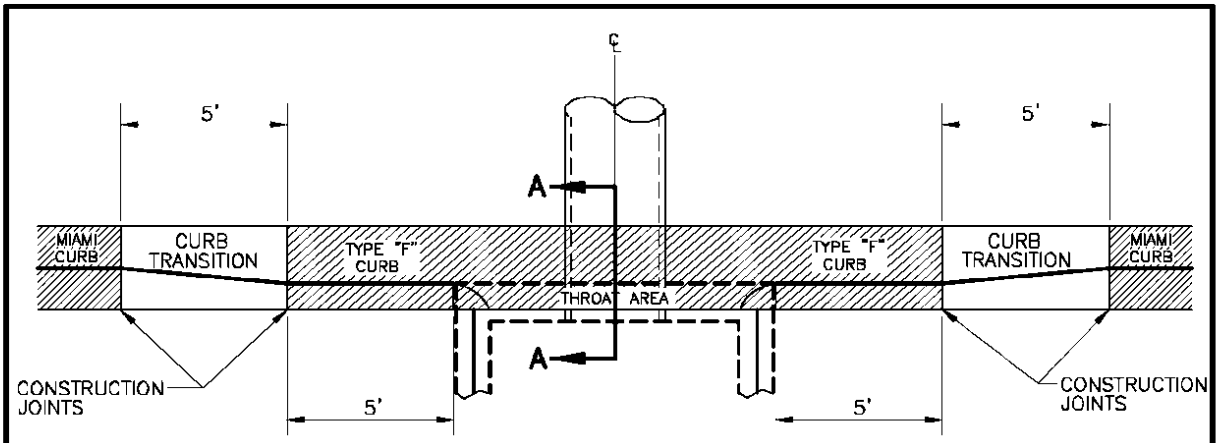

PLAN VIEW

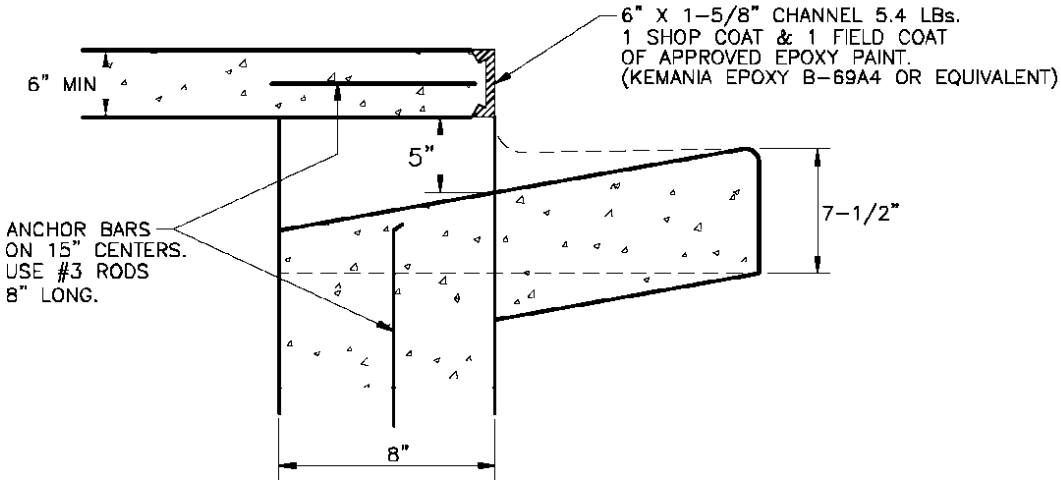

SECTION A-A

A) USE STANDARD CATCH BASIN & JUNCTION BOX DIMENSION INDEX (SHEET # 202.0) DETAILS AND COVER (SHEET # 202.6).

B) SEE CURB & GUTTER INDEX (SHEET # 201.0) FOR APPLICABLE CURB TYPE.

C) SEE SHEET # 202.0 "GENERAL NOTES" FOR APPLICABLE INFORMATION.

D) PRECAST BOXES AS SPECIFIED IN F.D.O.T. ROADWAY AND TRAFFIC DESIGN STANDARDS (2006) ARE AN ACCEPTABLE ALTERNATIVE AS APPROVED BY THE DIRECTOR OR HIS DESIGNEE.

E) ANGLE BRACKETS SHOWN ON 202.1 NOT REQUIRED.

MANATEE COUNTY TRANSPORTATION DEPARTMENT			CURB INLET	202.2
REV.BY	DATE			
		6/12/07 DATE OF B.O.C.C. APPROVAL		

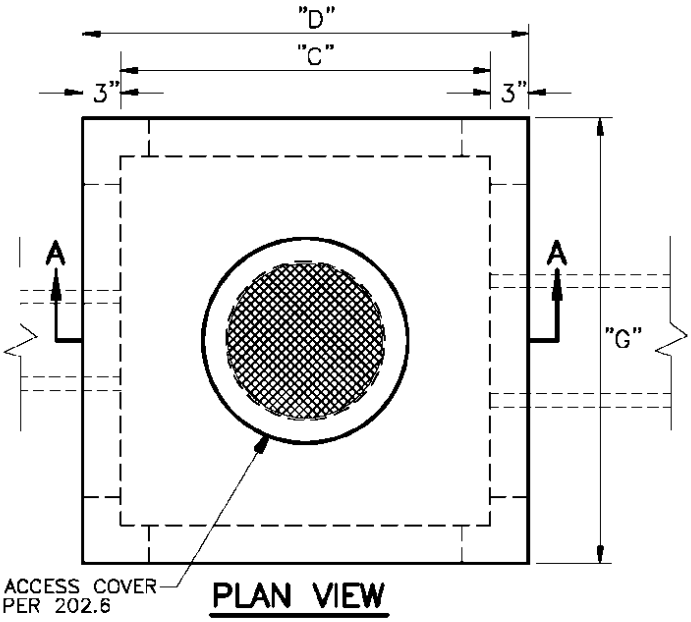

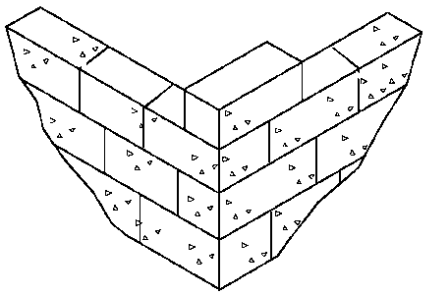

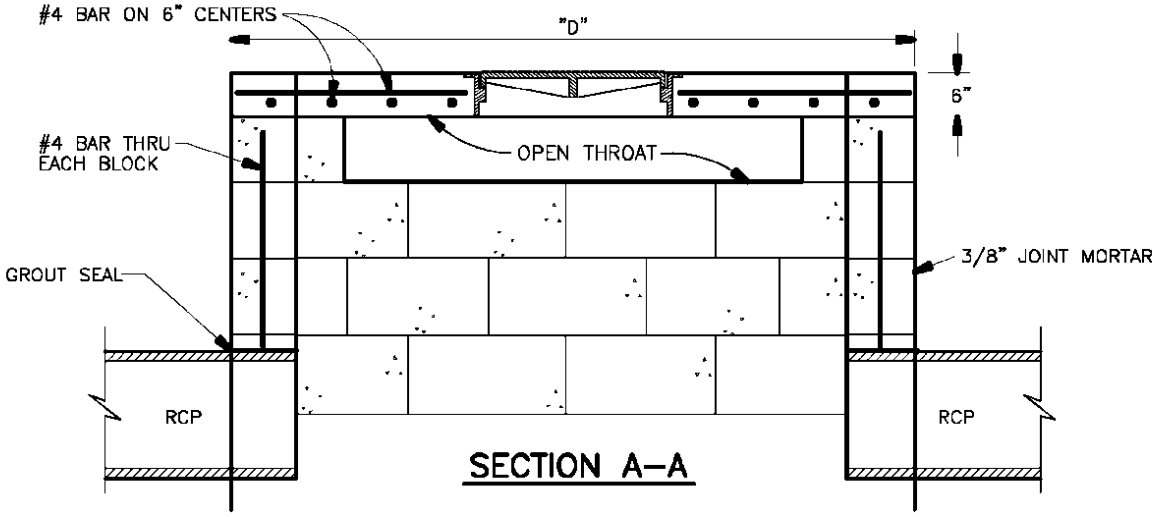

A) DROP INLET IS NOT DESIGNED TO BE SUBJECTED TO VEHICULAR TRAFFIC.

B) NUMBER OF SIDES OPEN FOR DRAINAGE DEPENDS UPON FLOW VOLUME REQUIREMENTS.

C) THE FOLLOWING MATERIALS SHALL BE AS SPECIFIED IN FLORIDA D.O.T. SPEC'S., 2000. SEC 346 CONCRETE, SEC 962–8 IRON CASTING, SEC 931–1 REINFORCED STEEL.

D) FILL BLOCKS WITH 3,000 P.S.I. CONCRETE (EACH CELL). USE #4 ROD IN EACH BLOCK, 16" O/C.

E) USE #4 ROD ON 6" CENTERS BOTH WAYS ON LID.

F) SEE SHEET # 202.0 GENERAL NOTES AND DIMENSIONS INDEX. ALSO SHEET 202.1 TYP. CONC. BOX.

G) PRECAST BOXES TO F.D.O.T. SPECIFICATIONS ARE AN ACCEPTABLE ALTERNATE.

H) INVERT TO BE GROUTED (SEE 202.1).

I) PRECAST BOXES AS SPECIFIED IN F.D.O.T. ROADWAY AND TRAFFIC DESIGN STANDARDS ARE AN ACCEPTABLE ALTERNATIVE AS APPROVED BY THE TRANSPORTATION DIRECTOR OR HIS DESIGNEE.

J) ANGLE BRACKETS SHOWN ON 202.1 NOT REQUIRED.

MANATEE COUNTY TRANSPORTATION DEPARTMENT			THROAT DETAIL FOR DROP INLET	202.3
REV.BY	DATE	6/12/07 DATE OF B.O.C.C. APPROVAL		

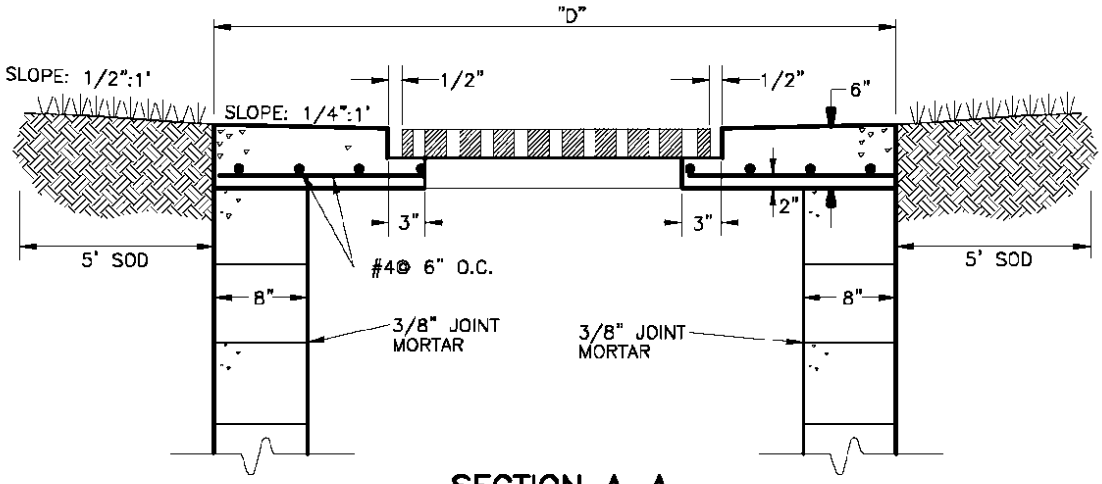

SECTION A–A

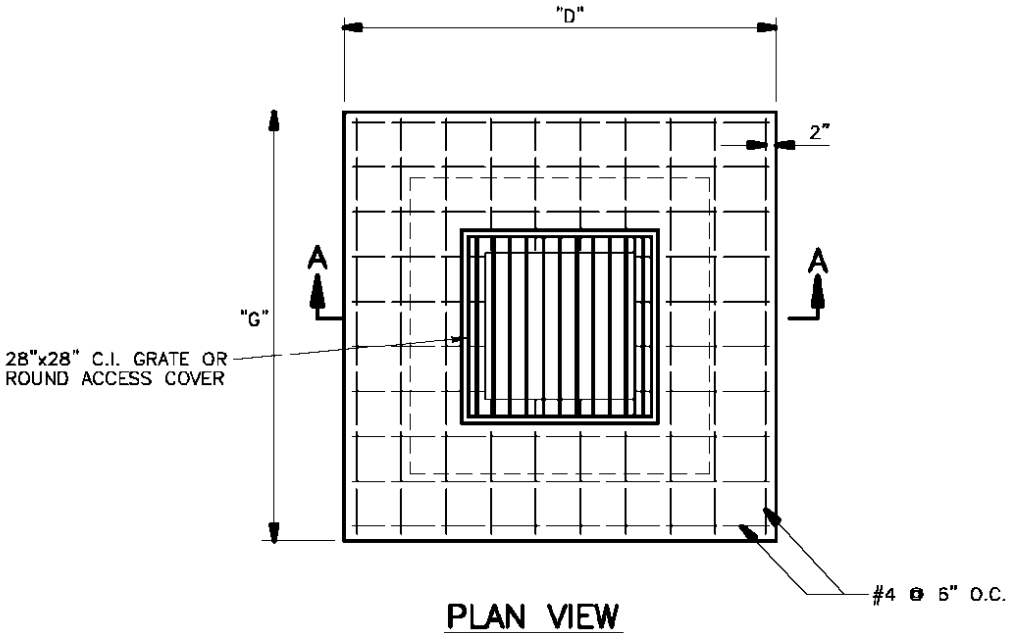

PLAN VIEW

NOTE: DIMENSIONS "D" & "G" PER SECTION 202.0

A) ALTERNATE C.I. GRATES, 18"X 24", 24"X 24", 28"X 36".

B) SOD TO BE PLACED A MINIMUM OF 5' AROUND BOX.

C) THE FOLLOWING MATERIALS SHALL BE AS SPECIFIED IN FLORIDA D.O.T. SPEC'S., 2000. SEC 346 CONCRETE, SEC 962–8 IRON CASTING, SEC 931–1 REINFORCED STEEL.

D) FILL BLOCKS WITH 3,000 P.S.I. CONCRETE (EACH CELL), USE # 4 ROD IN EACH BLOCK, 16" O/C.

E) USE #4 ROD ON 6" CENTERS BOTH WAYS ON LID.

F) SEE SHEET # 202.0 GENERAL NOTES AND DIMENSIONS INDEX, ALSO SHEET 202.1 TYP. CONC. BOX.

G) PRECAST BOXES AS SPECIFIED IN F.D.O.T. ROADWAY AND TRAFFIC DESIGN STANDARDS ARE AN ACCEPTABLE ALTERNATIVE AS APPROVED BY THE TRANSPORTATION DIRECTOR OR HIS DESIGNEE.

H) ANGLE BRACKETS SHOWN ON 202.1 NOT REQUIRED.

MANATEE COUNTY TRANSPORTATION DEPARTMENT			NON–TRAFFIC BEARING BOX LID	202.4
REV.BY	DATE	6/12/07 DATE OF B.O.C.C. APPROVAL		

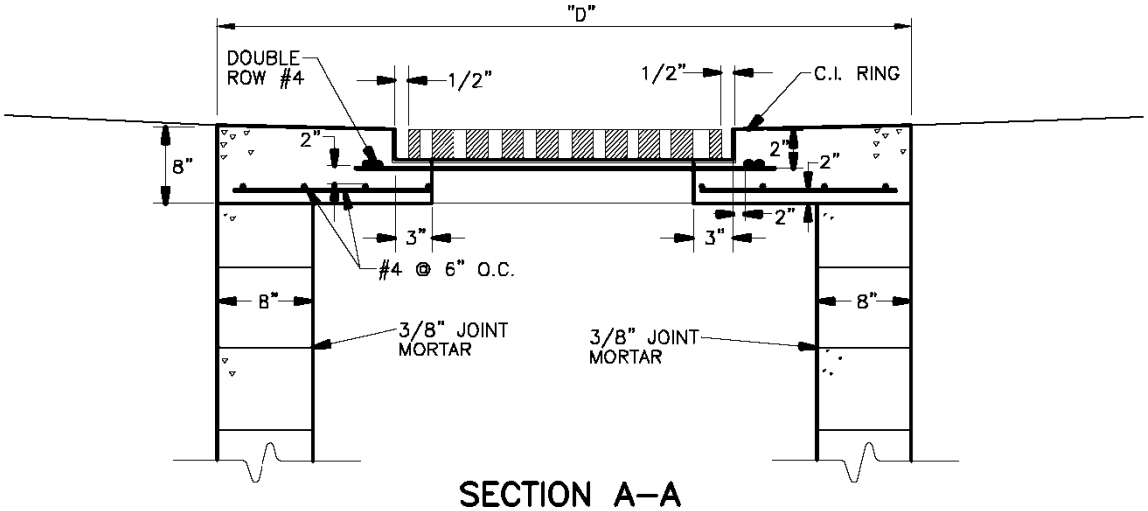

SECTION A–A

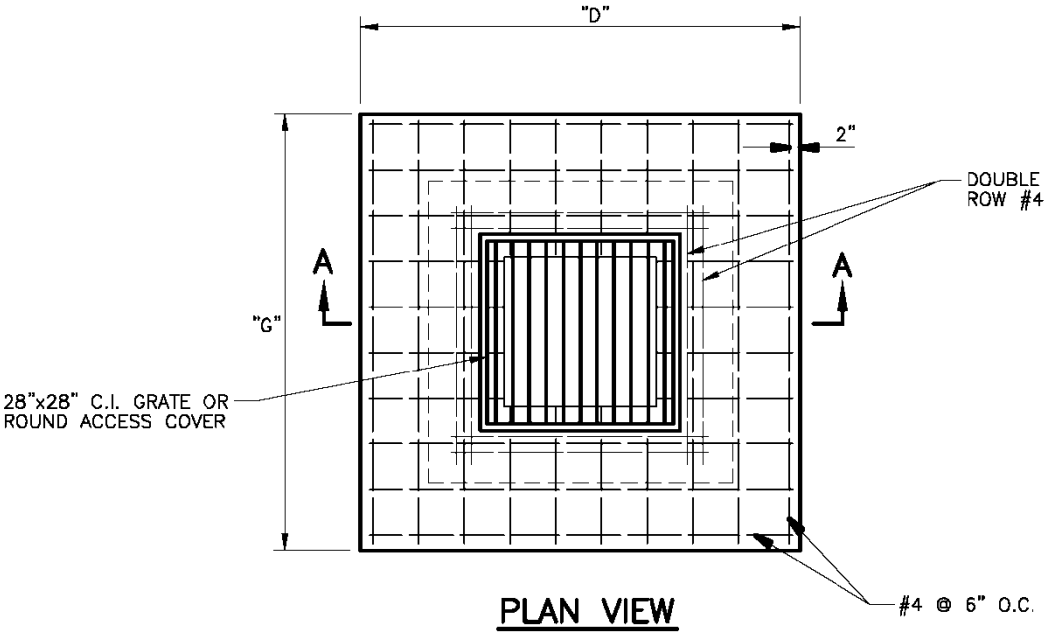

PLAN VIEW

NOTE: DIMENSIONS "D" & "G" PER SECTION 202.0

A) ALTERNATE C.I. GRATES, 18"X 24", 24"X 24", 28"X 36" OR ACCESS COVER (202.6).

B) 8" TRAFFIC BEARING LID W/ REINFORCING C.I. RING & DOUBLE ROW OF #4 REBAR.

C) FOLLOWING MATERIALS ARE SPECIFIED IN FLORIDA D.O.T. SPEC'S., 2000. SEC 346 CONCRETE, SEC 962–8 IRON CASTING, SEC 931–1 REINFORCED STEEL.

D) FILL BLOCKS WITH 3,000 P.S.I. CONCRETE (EACH CELL), USE #4 ROD IN EACH BLOCK, 16" O/C.

E) USE #4 ROD ON 6" CENTERS BOTH WAYS ON LID. (SEE 202.3 E)

F) SEE SHEET # 202.0 GENERAL NOTES AND DIMENSIONS INDEX, ALSO SHEET 202.1 TYP. CONC. BOX.

G) INVERT TO BE GROUTED (SEE 202.1).

H) PRECAST BOXES AS SPECIFIED IN F.D.O.T. ROADWAY AND TRAFFIC DESIGN STANDARDS ARE AN ACCEPTABLE ALTERNATIVE AS APPROVED BY THE TRANSPORTATION DIRECTOR OR HIS DESIGNEE.

I) ANGLE BRACKETS SHOWN ON 202.1 NOT REQUIRED.

MANATEE COUNTY TRANSPORTATION DEPARTMENT			TRAFFIC BEARING BOX LID	202.5
REV.BY	DATE			
		6/12/07		

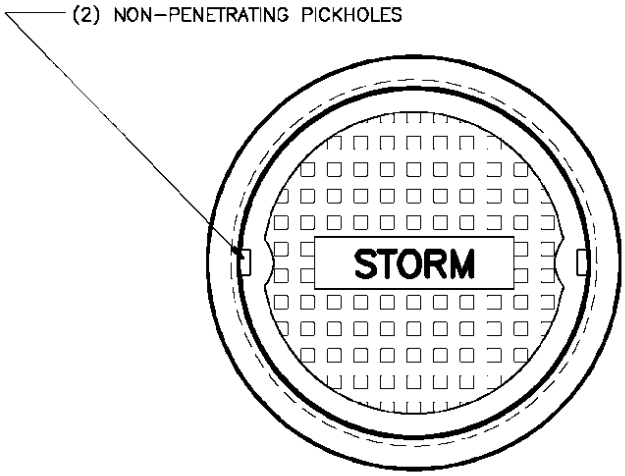

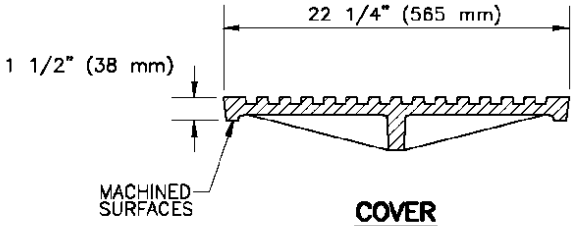

COVER

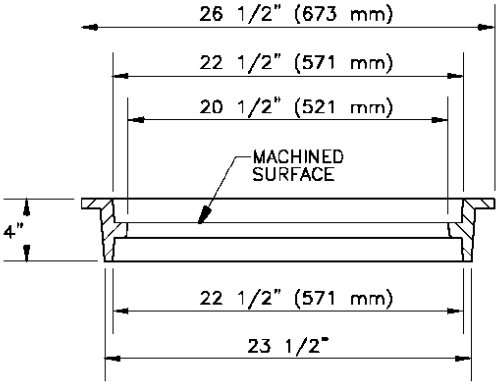

RING

USF 1110 RING & PROPOSED COVER

NOTE:

1 – MATERIAL; ASTM-A48 CLASS 30B GRAY IRON.
2 – COVER WEIGHT: 105 LBS. APPROX.
3 – RING WEIGHT: 90 LBS. APPROX.

MANATEE COUNTY TRANSPORTATION DEPARTMENT			ACCESS COVER FOR STORMWATER JUNCTION BOX (PRIVATE)	203.0
REV.BY	DATE	6/12/07 DATE OF B.O.C.C. APPROVAL		

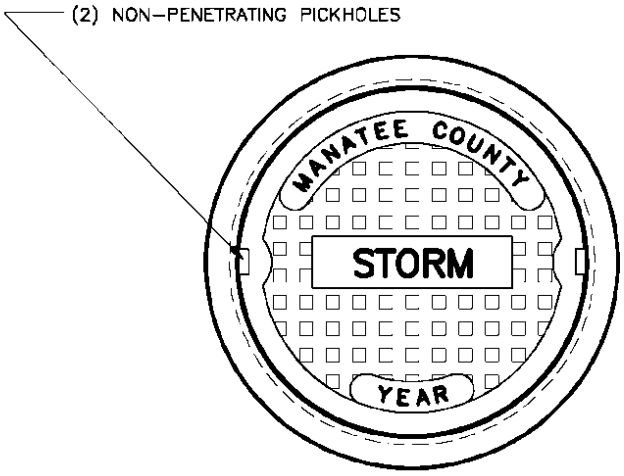

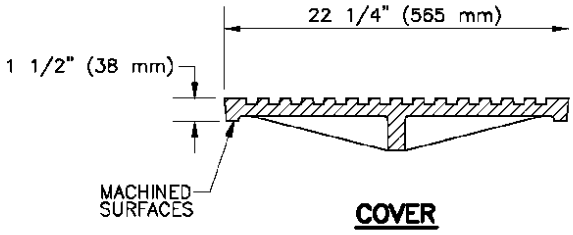

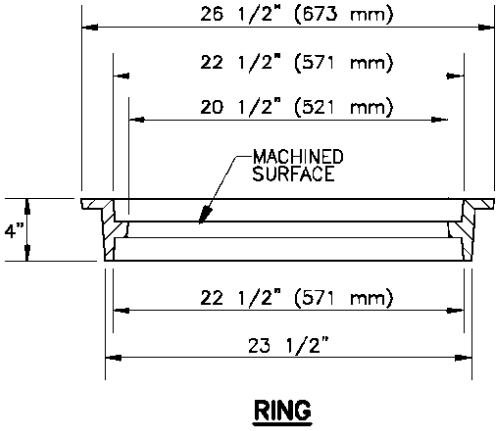

USF 1110 RING & PROPOSED COVER

NOTE:

1 – MATERIAL; ASTM-A48 CLASS 30B GRAY IRON.
2 – COVER WEIGHT: 105 LBS. APPROX.
3 – RING WEIGHT: 90 LBS. APPROX.

MANATEE COUNTY TRANSPORTATION DEPARTMENT			ACCESS COVER FOR STORMWATER JUNCTION BOX (PUBLIC)	203.1
REV.BY	DATE			
		6/12/07 DATE OF B.O.C.C. APPROVAL		

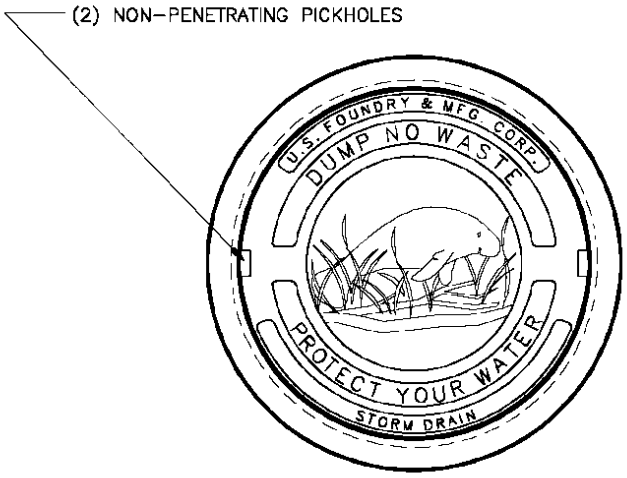

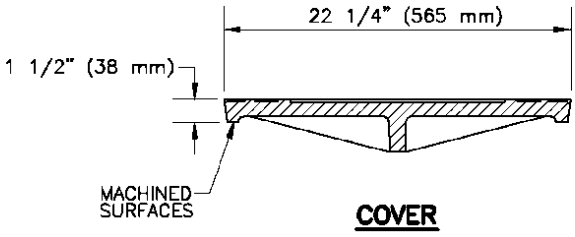

COVER

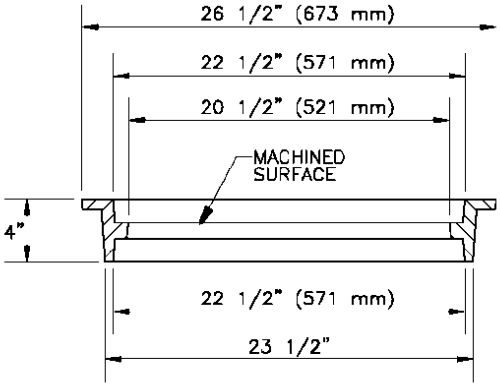

RING

USF 1110 RING & PROPOSED COVER

NOTE:

1 – MATERIAL; ASTM–A48 CLASS 30B GRAY IRON.
2 – COVER WEIGHT: 105 LBS. APPROX.
3 – RING WEIGHT: 90 LBS. APPROX.

MANATEE COUNTY TRANSPORTATION DEPARTMENT			ACCESS COVER FOR CATCH BASIN & THROAT INLET (PUBLIC)	203.2
REV.BY	DATE			
		6/12/07 DATE OF B.O.C.C. APPROVAL		

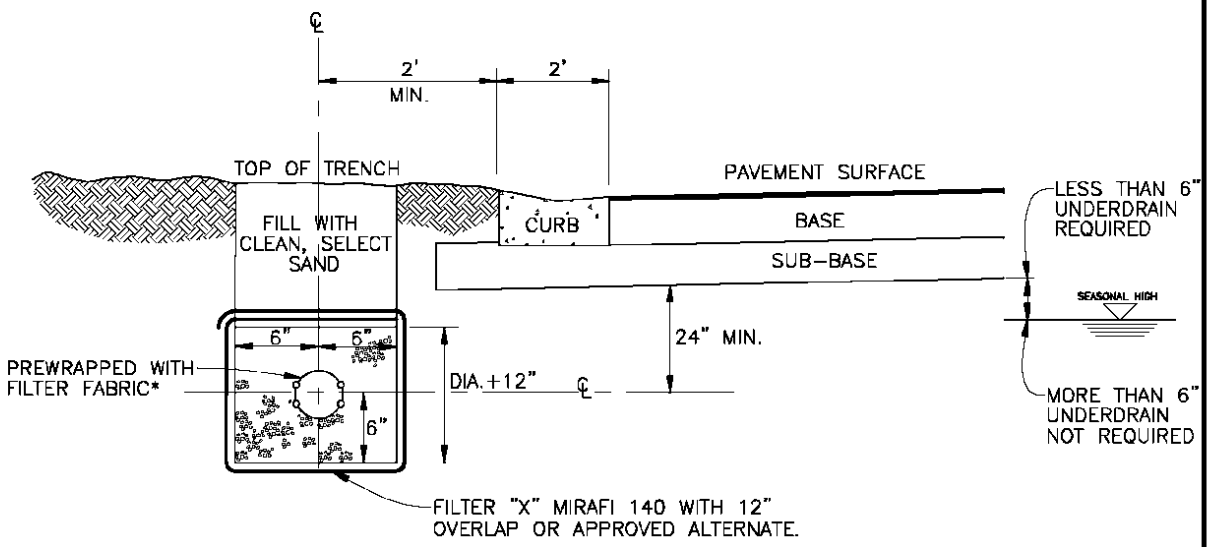

UNDERDRAIN PLACEMENT

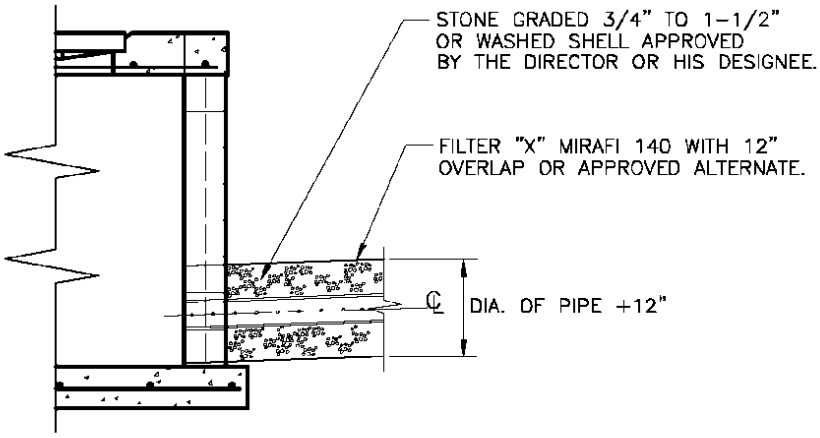

UNDERDRAIN TIE TO INLET

A) LOCATION OR NEED FOR UNDERDRAIN TO BE APPROVED BY THE DIRECTOR OR HIS DESIGNEE.

B) UNDERDRAIN SHALL BE AS SPECIFIED IN SECTION 440 OF FLORIDA DEPT. OF TRANSPORTATION SPEC. (2000 OR LATEST REVISION).

C) 6" TO 8" PERFORATED PIPE AS REQUIRED.

D) BACKFILL WITH CLEAN, SELECT SAND TO LINES SHOWN ON PLANS.

* IF PIPE PERFORATIONS ARE SMALLER THAN 3/4", THEN FILTER FABRIC SOCK MAY OMITTED.

MANATEE COUNTY TRANSPORTATION DEPARTMENT			TYPICAL UNDERDRAIN LAYOUT	204.1
REV.BY	DATE	6/12/07 DATE OF B.O.C.C. APPROVAL		

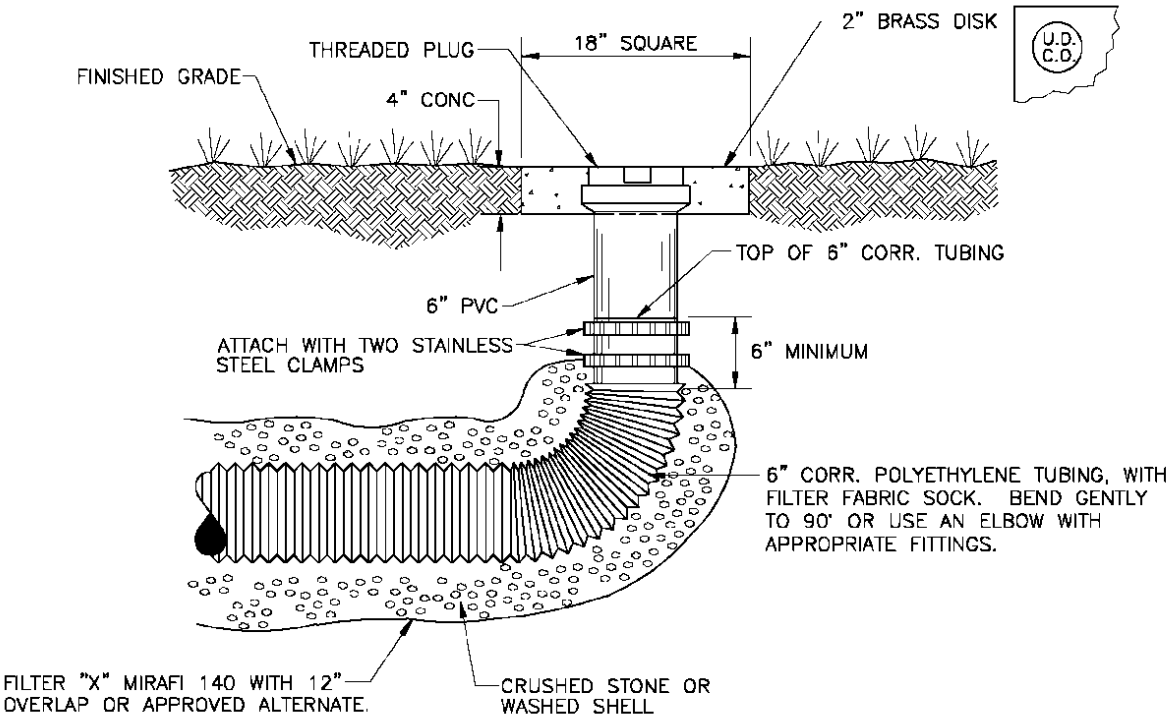

UNDERDRAIN CLEAN-OUT DETAIL
CORRUGATED POLYETHYLENE TUBING

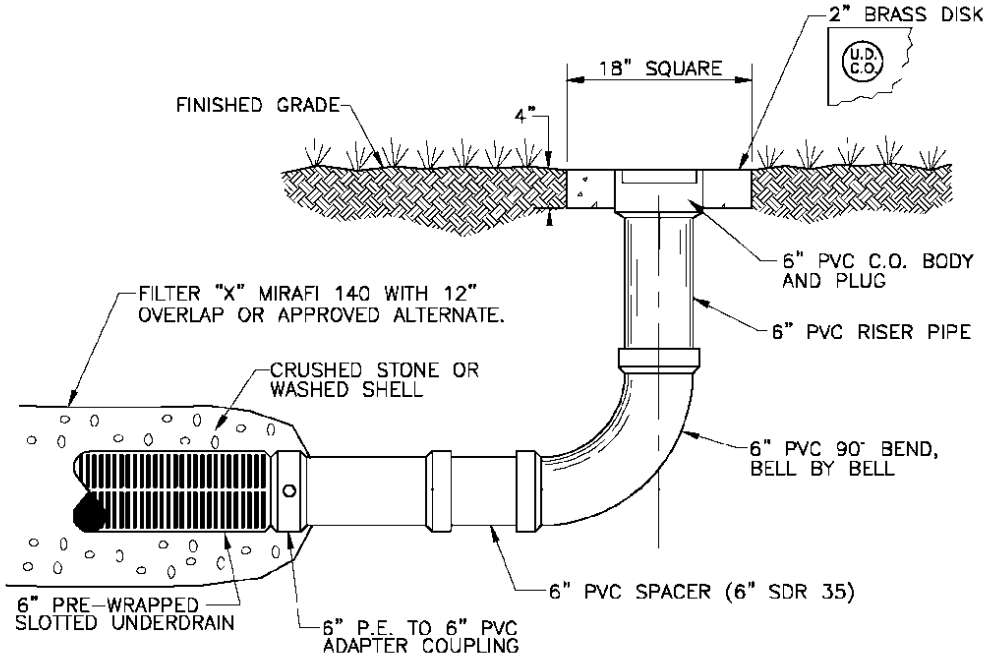

UNDERDRAIN CLEAN-OUT DETAIL - RIGID

* MAXIMUM SPACING EVERY 100 FEET.

MANATEE COUNTY TRANSPORTATION DEPARTMENT			UNDERDRAIN CLEAN-OUTS (FLEXIBLE & RIGID)	204.2
REV.BY	DATE	6/12/07 DATE OF B.O.C.C. APPROVAL		

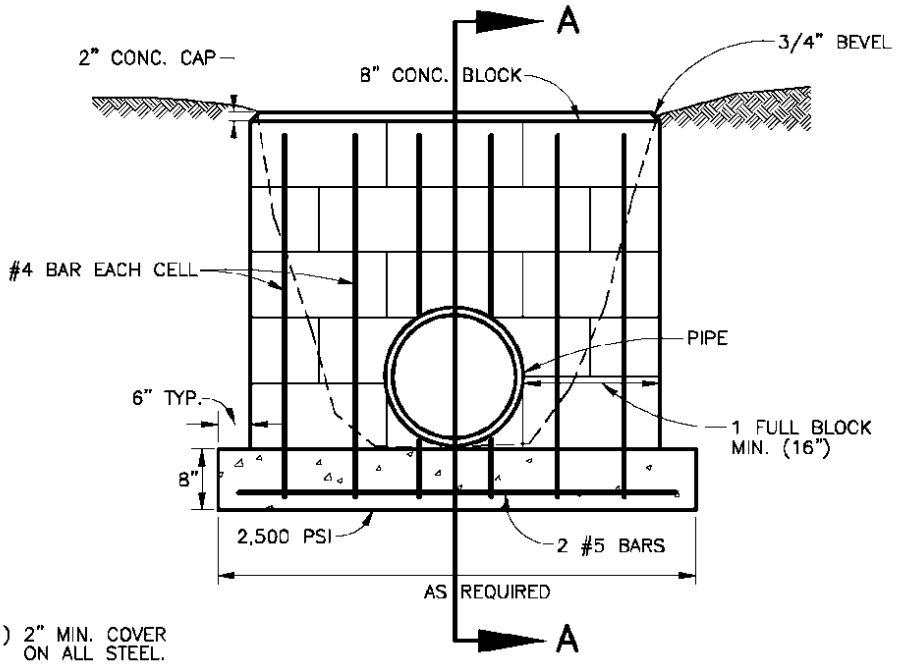

NOTE: 1) 2" MIN. COVER ON ALL STEEL.
2) EACH CELL OF BLOCK TO BE POURED

END VIEW

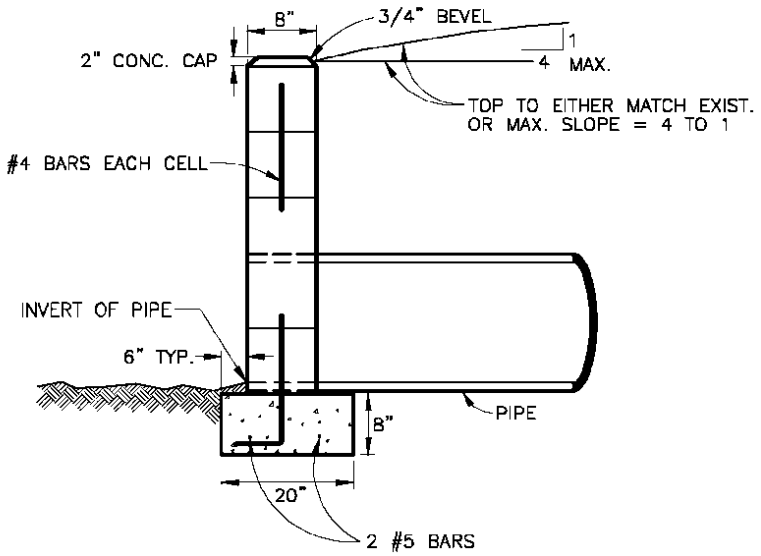

SECTION A–A

MANATEE COUNTY TRANSPORTATION DEPARTMENT			CONCRETE BLOCK HEADWALL	205.1
REV.BY	DATE	6/12/07 DATE OF B.O.C.C. APPROVAL		

APPENDIX D: LANDSCAPING DETAIL SHEETS.

INDEX

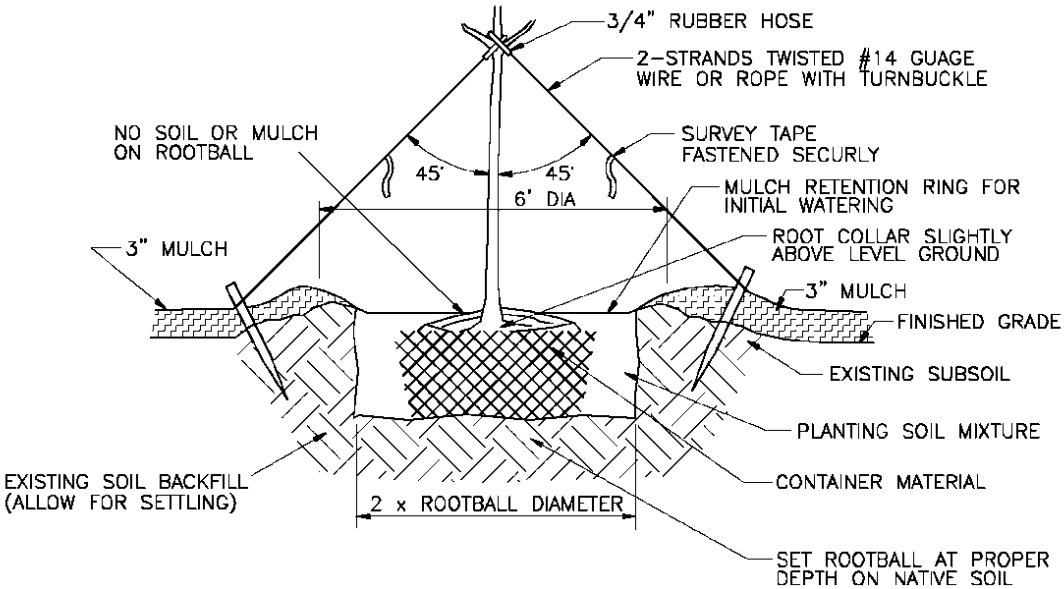

TREE PLANTING DETAIL

A) Use only high quality specimens that have rigid branches and healthy foliage; large specimens must be "hardened off".

B) Check for physical damage and root system quality prior to planting:

(1) No large wounds on trunks and major branches; prune minor damage.
(2) No large encircling roots; prune small encircling roots.
(3) Trunk must be solid in rootball, not loose.
(4) Remove any stem sprouts to first tier of branches.

C) Remove any container material, including wires, strings, plastic, etc.

D) Tree must be set at proper depth—root collar at or higher than soil level with allowance for settling; never lower. No soil or mulch should be placed on top of the rootball.

E) Prepare water retention ring with mulch, repair as necessary to contain water. Initial watering should totally saturate soil and remove air pockets. Water daily for two weeks at a minimum; reduce scope of watering depending on weather and season.

F) Stake tree only if it cannot support its crown vertically in moderate winds, follow detail, remove stakes when trunk is able to support crown.

G) Mulch rings shall be 2' width and must be of the same mulch variety throughout the project.

MANATEE COUNTY TRANSPORTATION DEPARTMENT			TREE PLANTING DETAIL	600.3
REV.BY	DATE			
		6/12/07 DATE OF B.O.C.C. APPROVAL		

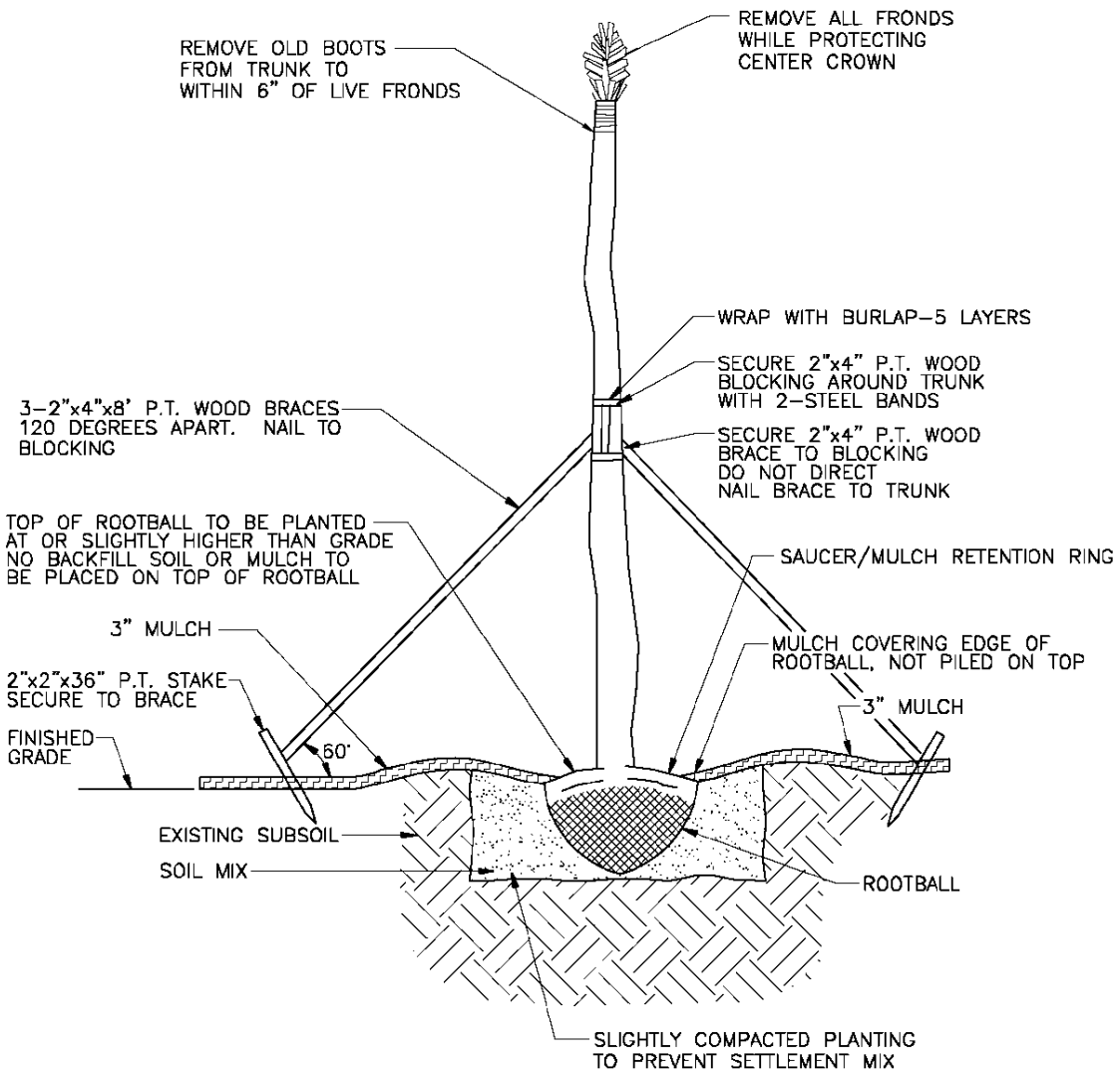

CABBAGE PALM PLANTING AND BRACING DETAIL

NO SLOPES

A) Check stem and bud for physical damage.

B) Water initially by flooding retention ring to remove air pockets; water daily for three weeks, after which decrease gradually per weather and season.

C) Remove all bracing after three months, or sooner if established.

D) Refer to FDOT Index 544 for all other conditions.

E) Mulch rings shall be 2' width and must be of the same mulch variety throughout the project.

MANATEE COUNTY TRANSPORTATION DEPARTMENT			CABBAGE PALM PLANTING DETAIL	600.4
REV.BY	DATE	6/12/07 DATE OF B.O.C.C. APPROVAL		

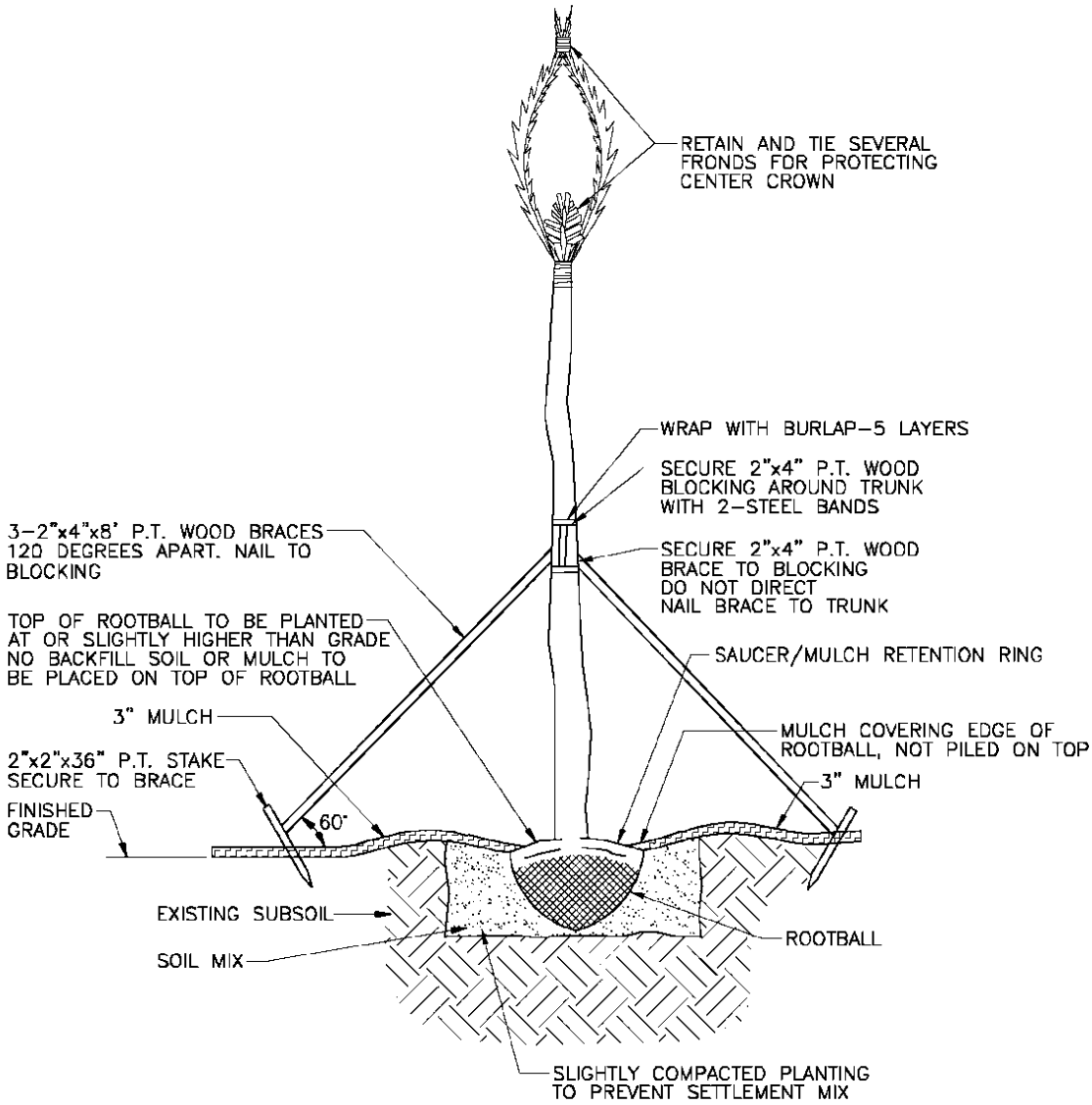

ROYAL/DATE PALM PLANTING AND BRACING DETAIL

NO SLOPES

A) Check stem and bud for physical damage.

B) Water initially by flooding retention ring to remove air pockets; water daily for three weeks, after which decrease gradually per weather and season.

C) Remove all bracing after three months, or sooner if established.

D) Refer to FDOT Index 544 for all other conditions.

E) Mulch rings shall be 2' width and must be of the same mulch variety throughout the project.

MANATEE COUNTY TRANSPORTATION DEPARTMENT			ROYAL/DATE PALM PLANTING DETAIL	600.5
REV.BY	DATE	6/12/07 DATE OF B.O.C.C. APPROVAL		

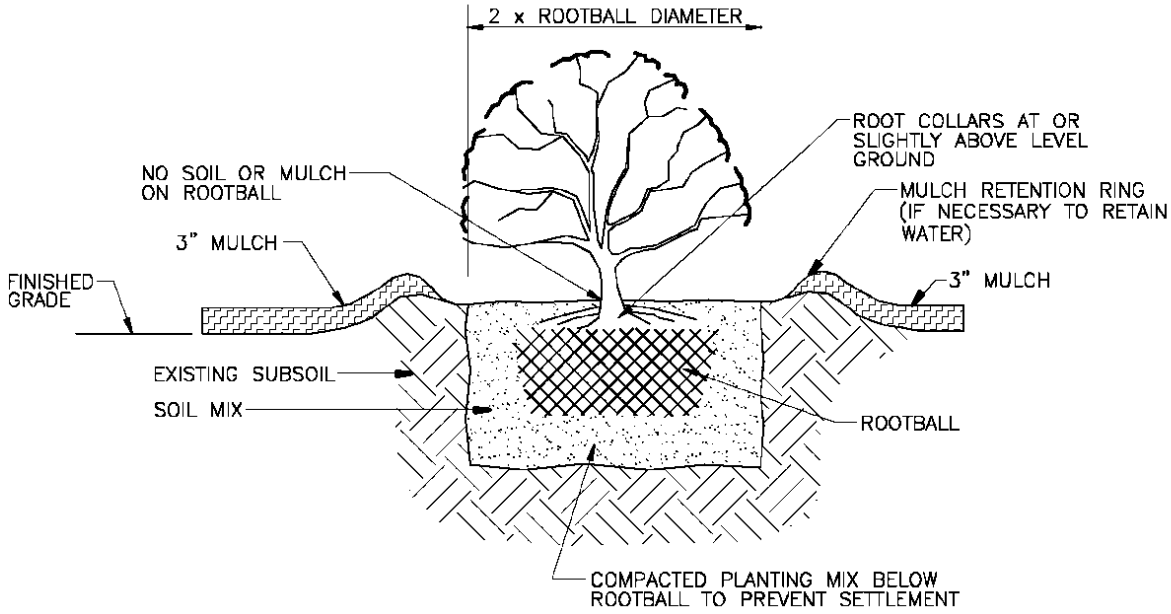

SHRUB PLANTING DETAIL

NO SLOPES

A) Use only high quality specimens that have rigid branches and healthy foliage. Florida No. 1 quality shall be required.

B) Check for physical damage and root system quality prior to planting:
   (1) Prune any damaged branches.
   (2) Remove any circling stems and adventitious roots.
   (3) Stem must be solid in rootball, not loose.

C) Plant with root collar at or higher than finish grade, allow for settling.

D) The use of preemergent herbicides prior to mulch installation to aid in the initial control of weeds in shrub beds is highly encouraged; always follow label for proper application rates and handling.

E) Mulch rings shall be 2' width and must be of the same mulch variety throughout the project.

MANATEE COUNTY TRANSPORTATION DEPARTMENT			SHRUB PLANTING DETAIL	600.6
REV.BY	DATE	6/12/07 DATE OF B.O.C.C. APPROVAL		

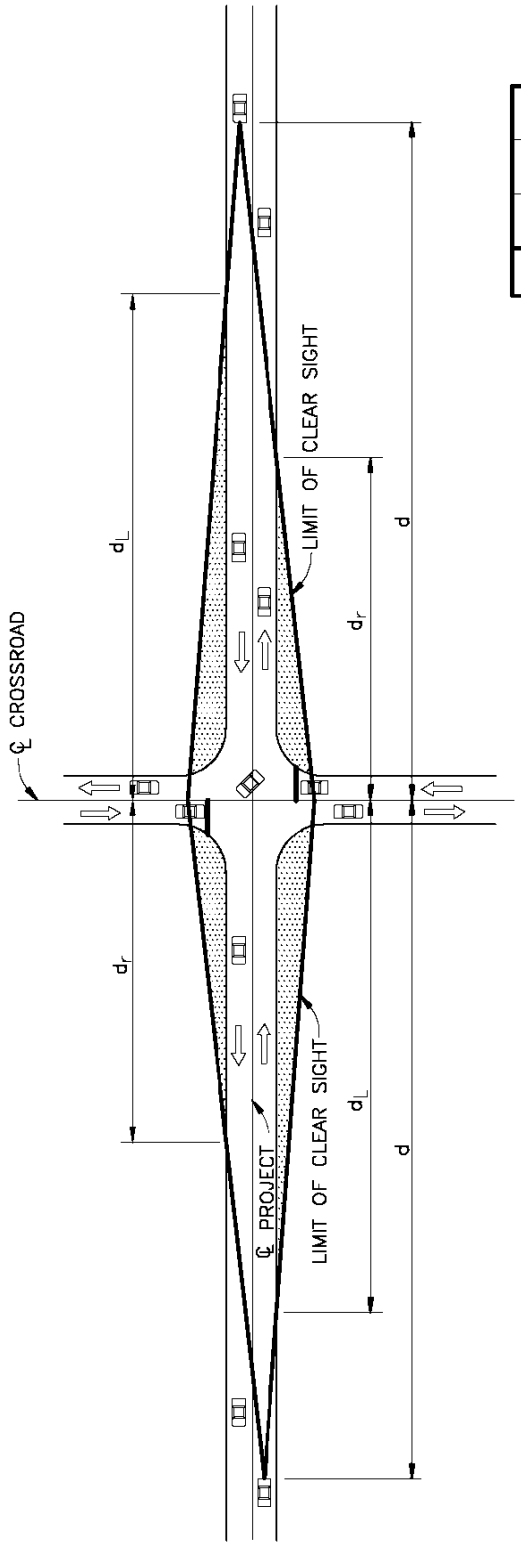

SIGHT WINDOW DETAIL

DESIGN SPEED	d	d_L	d_r
30	380	290	200
35	470	370	250
40	580	450	310
45	710	550	380
50	840	650	450

SIGHT DISTANCE (d) AND RELATED DISTANCES (d_L, d_r) (FEET)

A) The triangular corridors created by the limits of clear sight (shaded areas on pictorial graphic) from the table are restricted areas for all objects including plant material. Any proposed use of plant material and/or hardscapes in these areas must conform to the standards in the Sight Window Detail, Section 600.8

B) The limits of sight derived from the table are based on the "design speeds" of the highway; the "posted" speed limits are usually less.

C) The pictorial graphic above is based on a typical 2-lane undivided highway intersection. For multilane, divided, and higher design speed highways, refer to FDOT Roadway and Traffic Design Standards, 2002, Index 546.

MANATEE COUNTY TRANSPORTATION DEPARTMENT			SIGHT DISTANCE PLAN VIEW	600.7
REV.BY	DATE			
		6/12/07 DATE OF B.O.C.C. APPROVAL		

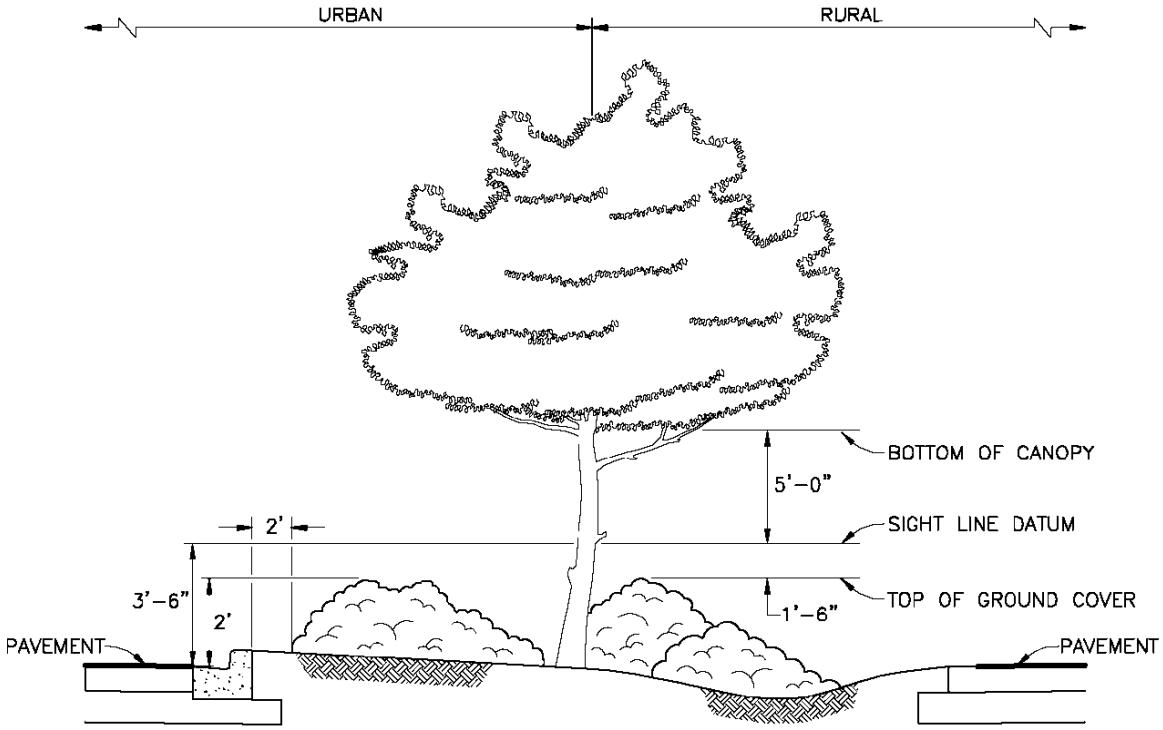

THE INTENT OF THIS STANDARD IS TO PROVIDE A WINDOW WITH VERTICAL LIMITS OF NOT LESS THAN 5' ABOVE AND 1'-6" BELOW THE SIGHT LINE DATUM, AND HORIZONTAL LIMITS DEFINED BY THE LIMITS OF CLEAR SIGHT.

SIGHT WINDOW DETAIL

A) The intersection sight window dimensions are based on the "sight datum line" which is a straight horizontal line from the driver's eye in a car on a side street at an intersection to the eye of a driver on the approaching lane.

B) In the condition where the "sight datum line" is level (equal height to both drivers), the minimum distances for the clear zone are:

(1) 1.5 feet (18 inches) above the top of vegetation or 3'-6" above parallel ground [at level ground this means the lower vegatation must be maintained at a height of no more than 2 feet (24 inches)].

(2) 5.0 feet (60 inches) below the bottom of a tree canopy or 8.5 feet above parallel ground.

C) In the condition where the median is raised, the minimum clearance is raised equally for the lower vegetation and lowered equally for tree canopies; this is reversed for swaled or depressed medians.

D) Tree stems and branches are allowed in the sight window, but all foliage must be removed and the sight window maintained free of sight blockage. All dead palm branches must be removed.

E) The trunks of trees in the sight windows in medians and roadsides must not block more than 50% of a driver's view in any direction. This condition may require increased spacing of trees or fewer trees.

F) See Clear Zone (Std. 402.1) for min. side setbacks.

MANATEE COUNTY TRANSPORTATION DEPARTMENT			SIGHT WINDOW DETAIL	600.8
REV.BY	DATE	6/12/07 DATE OF B.O.C.C. APPROVAL		

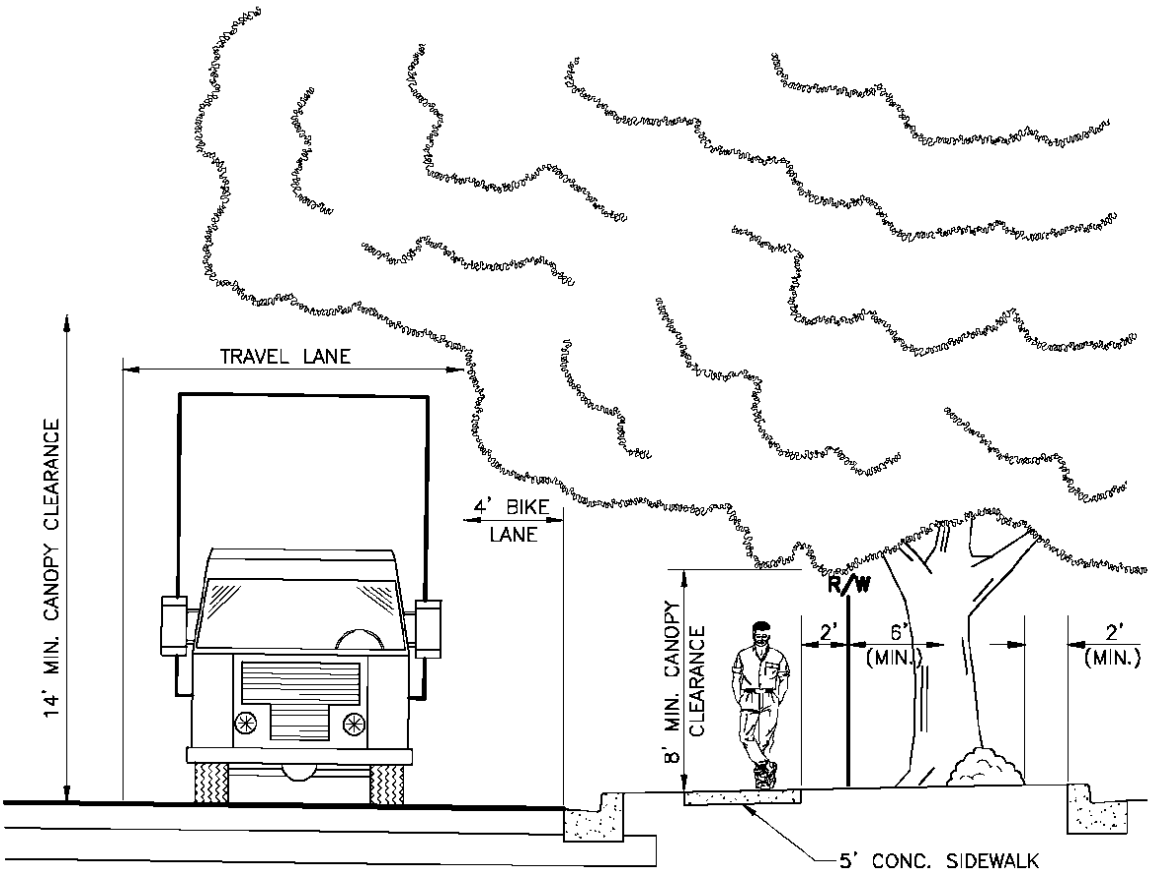

VERTICAL CLEARANCE DETAIL

A) The lower canopy of all trees (both in and outside of rights-of-way) must be kept a minimum of eight (8) feet above all sidewalks.

B) The lower canopy of all trees must be kept a minimum of fourteen (14) feet above all travel and turning lanes (includes branches and foliage).

C) Where no sidewalk exists, trees to be planted must be a minimum of five (5) feet behind curbs or edge of pavement and shrubs or foliage must be a minimum of two (2) feet behind curbs or edge of pavement. Where sidewalk exists, trees should be planted outside of the walk (5' Typical), unless waived by the Department due to unreasonable dimensions or insufficient right-of-way.

MANATEE COUNTY TRANSPORTATION DEPARTMENT			VERTICAL CLEARANCE DETAIL	600.9
REV.BY	DATE			
		6/12/07 DATE OF B.O.C.C. APPROVAL		

APPENDIX E: DRIVEWAY DETAIL SHEETS

INDEX

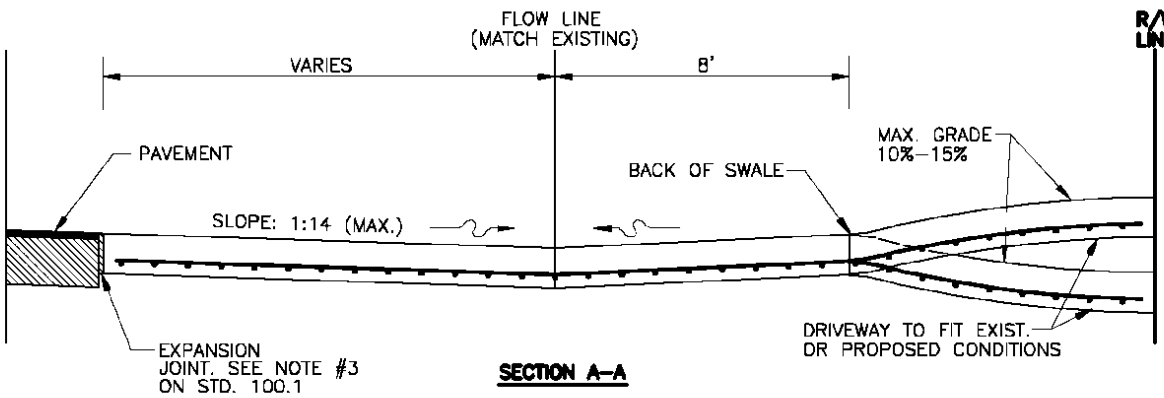

SECTION A–A

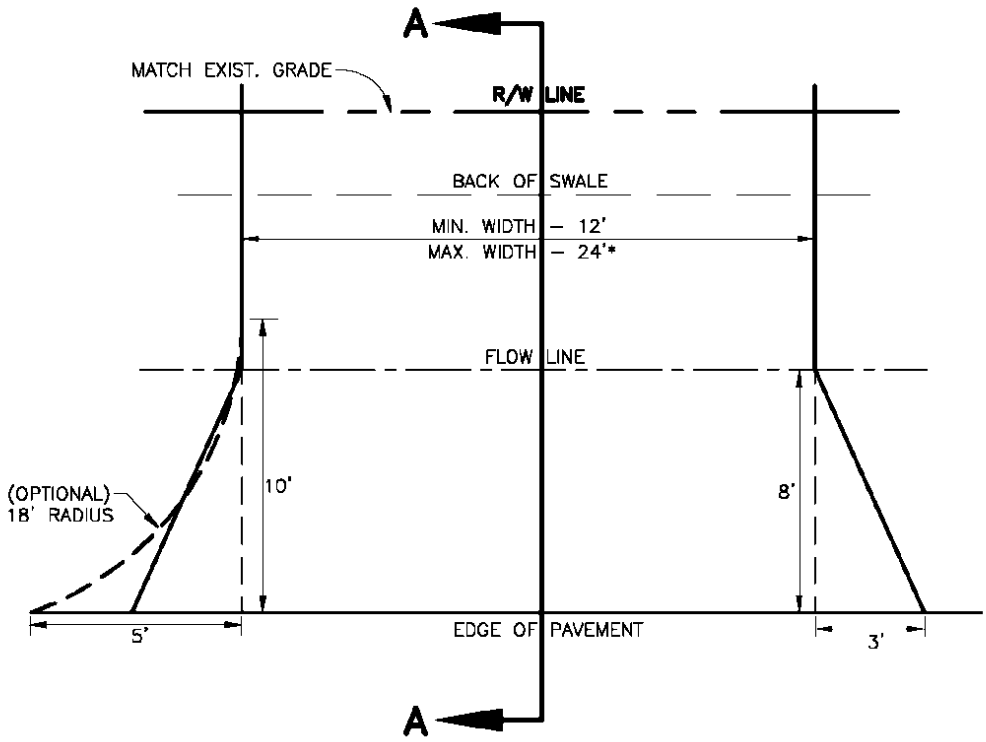

PLAN VIEW

* For driveways that can demonstrate the need for additional width, the width may not be greater than the LESSER of:

a.) 30' total at the R/W line

b.) 30% of the front footage as defined on the survey (or field measurements, 36' max.)

(A) CONSTRUCT WITH 6" REINFORCED CONCRETE (3,000 psi @ 28 DAYS) WITH 6"x6" #10 MESH FROM EDGE OF PAVEMENT TO THE RIGHT–OF–WAY LINE.

(B) DRIVEWAYS ADJACENT TO A PAVED ROADWAY MUST HAVE THE APRON CONSTRUCTED IN COMPLIANCE WITH THE NOTE (A) ABOVE.

(C) EXISTING DRAINAGE FLOWLINE TO BE MAINTAINED. PIPING MAY BE REQUIRED AT THE COUNTY'S DISCRETION.

(D) 3'x8' FLARED APRON IS MINIMAL, OR 18' RADIUS.

(E) ENGINEERING DIVISION MANAGER MAY APPROVE THE USE OF A SWALE DRIVE, IF ON–SITE CONDITIONS ARE FAVORABLE.

MANATEE COUNTY TRANSPORTATION DEPARTMENT			RURAL RESIDENTIAL (SWALE DRIVE)	101.0
REV.BY	DATE	6/12/07 DATE OF B.O.C.C. APPROVAL		

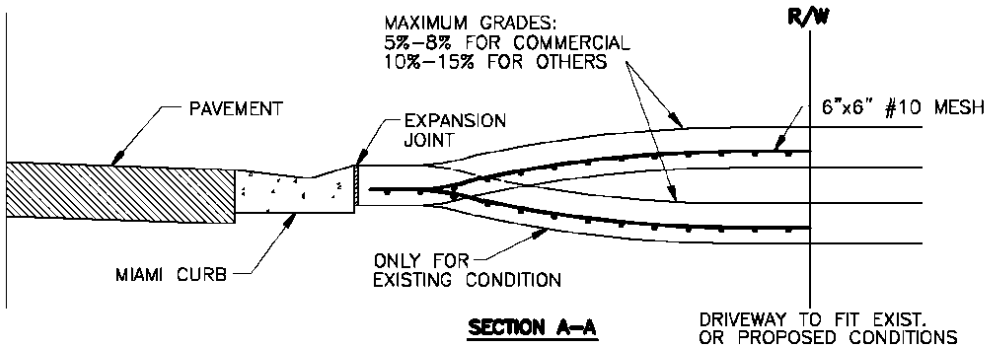

SECTION A–A

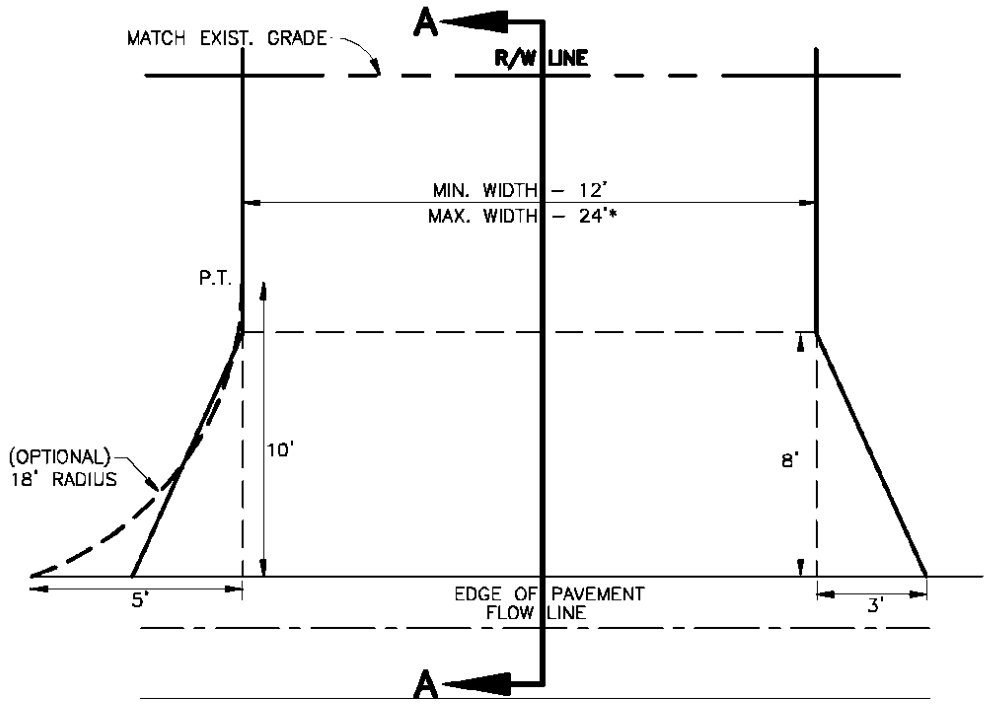

PLAN VIEW

* For driveways that can demonstrate the need for additional width, the width may not be greater than the LESSER of:

a.) 30' total at the R/W line
b.) 30% of the front footage as defined on the survey (or field measurement, 36' max.)

(A) CONSTRUCT WITH 6" REINFORCED CONCRETE 3000 PSI @ 28 DAYS, 6"x6" #10 WIRE MESH FROM BACK OF CURB– TO R/W LINE.

(B) DRIVEWAYS ADJACENT TO A PAVED ROADWAY MUST HAVE THE APRON CONSTRUCTED IN COMPLIANCE WITH THE NOTE (A) ON PREVIOUS PAGE (STD. 101.0)

(C) MAINTAIN EXISTING DRAINAGE FLOWLINE. FOR PIPING SPECIFICATIONS REFER TO F.D.O.T. STANDARD SPECIFICATIONS SECTION 430. SEE NOTE 4, PAGE 100.1. SEE SECTION 200– DRAINAGE (STD. 200.0, 202.5).

(D) 3'x8' FLARE OR 18' RADIUS WITH CURB TRANSITION (TRANSITION FROM TYPE "F" CURB TO MIAMI CURB) SEE STD. 102.2 NO CHANGE WITH 3' VALLEY CROSSINGS – SEE STDS. 201.0, 201.1, 201.2, 201.4, 201.5, 201.6.

(E) EXPANSION JOINT 0.50" PREFORMED JOINT FILLER OR APPROVED ALTERNATE, DRIVES WIDER THAN 12' (BEYOND FLARE) PLACE JOINT ON 10' CENTER.

(F) LATERAL ALIGNMENT 45 DEGREES FOR DOUBLE DRIVE PER LOT, 90 DEGREES FOR SINGLE DRIVE, OFF CENTER LINE.

MANATEE COUNTY TRANSPORTATION DEPARTMENT			URBAN DRIVES	101.1
REV.BY	DATE	6/12/07 DATE OF B.O.C.C. APPROVAL		

TYPE "F" CURB For * driveways that can demonstrate the need for additional width, the width may not be greater than the LESSER of:

a.) 30' total at the R/W line
b.) 30% of the front footage as defined on the survey (or field measurements)

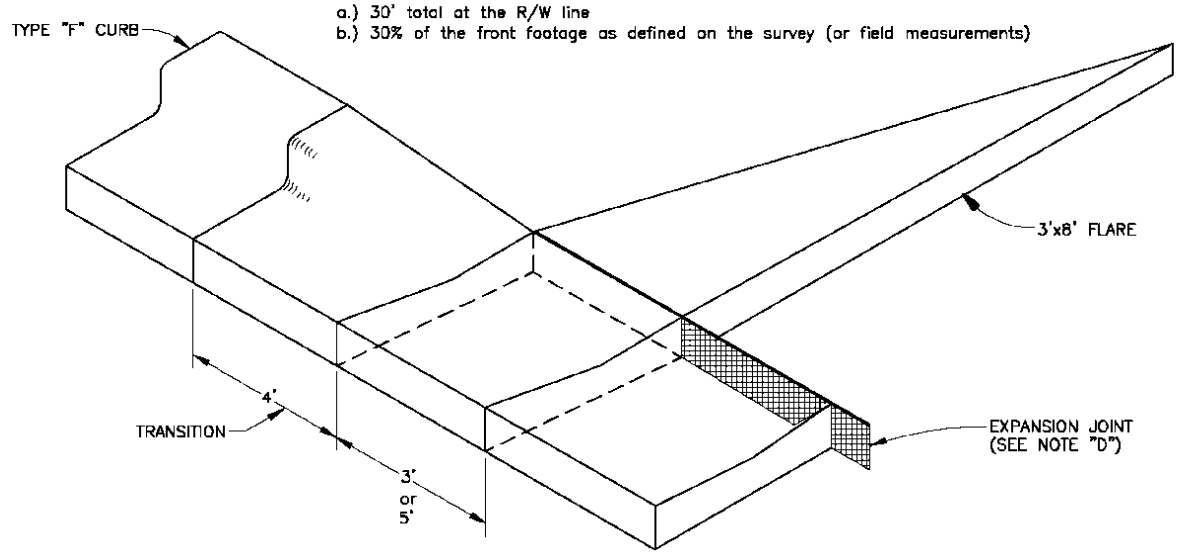

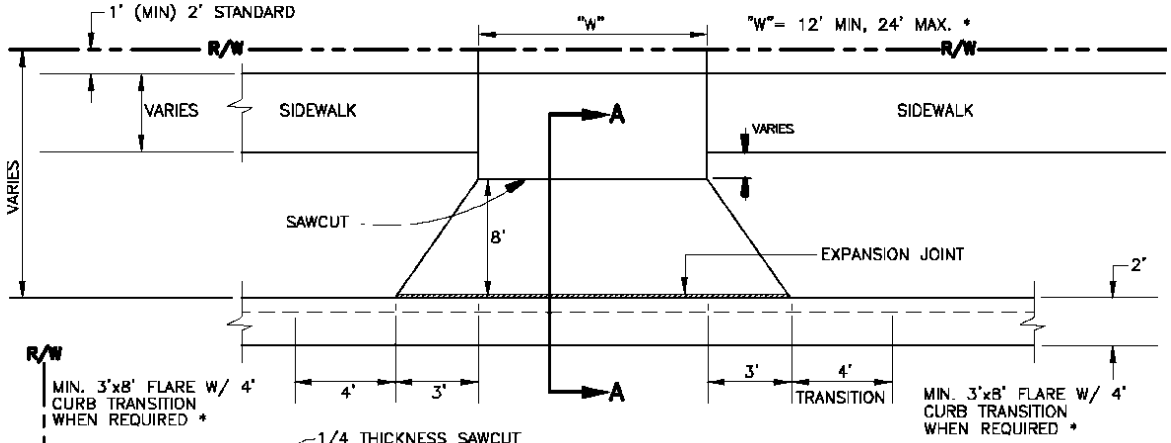

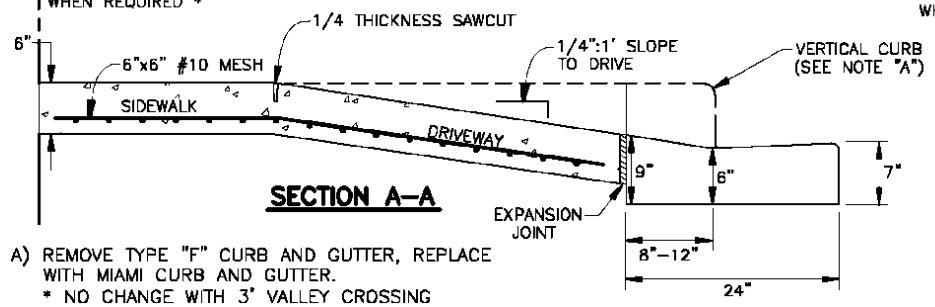

A) REMOVE TYPE "F" CURB AND GUTTER, REPLACE WITH MIAMI CURB AND GUTTER.
* NO CHANGE WITH 3' VALLEY CROSSING

B) REMOVE EXISTING SIDEWALK, REPLACE WITH 6" CONCRETE, 6"x6" #10 MESH 3000 PSI AT 28 DAYS.

C) DRIVEWAY CONSTRUCTED WITH 6" CONCRETE WITH 6"x6" #10 MESH 3000 PSI AT 28 DAYS

D) EXPANSION JOINT 1/2" PREFORMED JOINT FILLER PER FDOT SECTION 932–1.1 OR APPROVED ALTERNATE

E) 5' SIDEWALK ON LOCAL STREETS, 5' SIDEWALK ON THOROUGHFARES. MIXED USE PATHS MAY REQUIRE 8' SIDEWALKS PER LAND DEVELOPMENT CODE.

F) SAWCUT (1/4 THICKNESS MINIMUM) ON 10' CENTERS. IF DRIVE IS WIDER THAN 12', ADD JOINTS AT 10' CENTERS.

MANATEE COUNTY TRANSPORTATION DEPARTMENT			CURB CUT & TRANSITION W/ T–FLARE FOR RESIDENTIAL DRIVES	101.2
REV.BY	DATE	6/12/07 DATE OF B.O.C.C. APPROVAL		

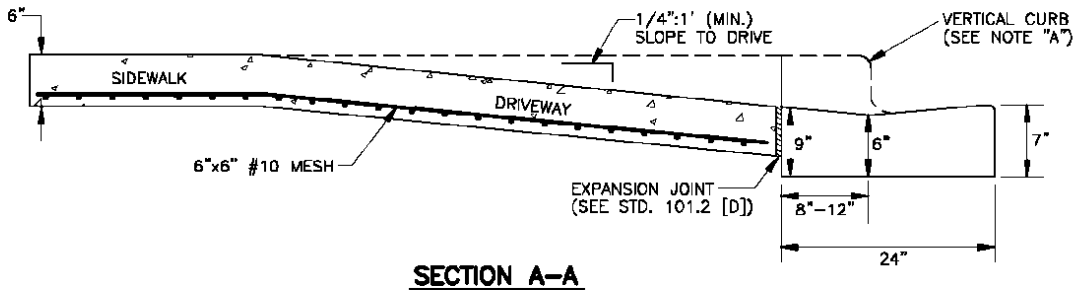

SECTION A–A

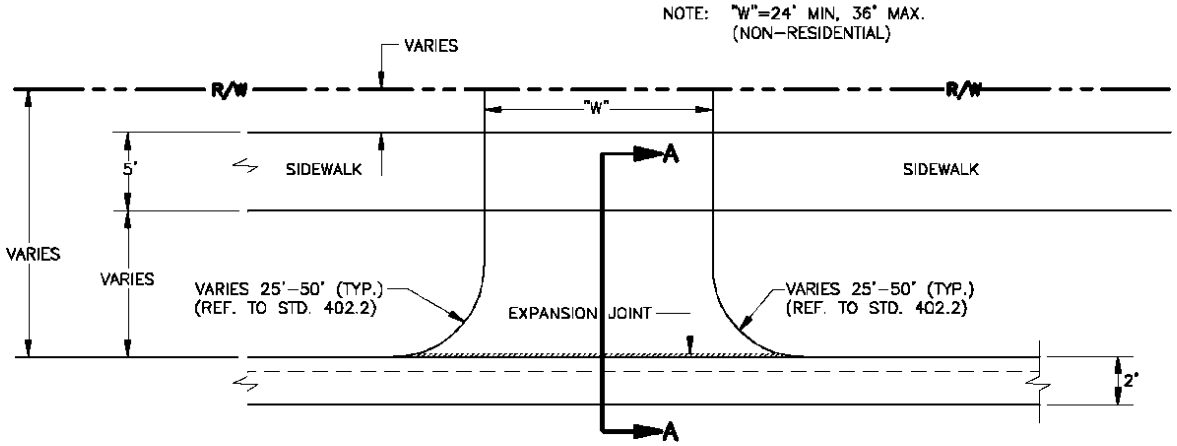

PLAN VIEW

A) IF REPLACING VERTICAL CURB AND GUTTER, REPLACE WITH MIAMI CURB AND GUTTER.
* NO CHANGE WITH 3' VALLEY CROSSING

B) SIDEWALK, CONSTRUCT WITH 6" CONCRETE, 6"X6" #10 MESH, 3000 PSI AT 28 DAYS.

C) DRIVEWAY CONSTRUCTED WITH 6" CONCRETE WITH 6"X6" #10 MESH, 3000 PSI AT 28 DAYS.

D) EXPANSION JOINT 1/2" PREFORMED JOINT FILLER PER FDOT SECTION 932-1.1 OR APPROVED ALTERNATE.
* IF DRIVE IS WIDER THAN 12', ADD JOINTS AT 10' CENTERS

E) 5' SIDEWALK ON LOCAL STREETS, 5' SIDEWALK ON THOROUGHFARES.
(MIXED USE PATHS MAY REQUIRE 8' SIDEWALKS PER LAND DEVELOPMENT CODE.)

MANATEE COUNTY TRANSPORTATION DEPARTMENT			COMMERCIAL & INDUSTRIAL DRIVE	101.3
REV.BY	DATE			
		6/12/07 DATE OF B.O.C.C. APPROVAL		

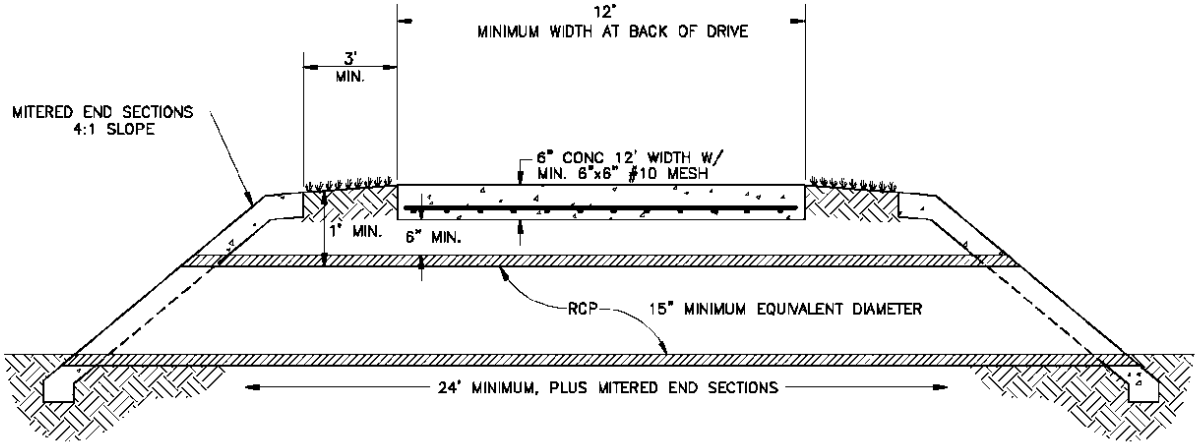

TYPICAL DRIVEWAY

VARIABLES: C.M.P. WILL NOT BE ALLOWED WITHIN THE RIGHT-OF-WAY.
R.C.P. WILL REQUIRE A MINIMUM 6" OF COVER BENEATH BOTTOM OF DRIVEWAY, FOR A TOTAL OF 1' OF COVER. HDPE PIPE IS ACCEPTABLE IN LIEU OF RCP.

NOTE:
1) GRADES AND LOCATIONS MUST BE REVIEWED AND APPROVED BY THE DRIVEWAY INSPECTOR FOR ALL PIPE INSTALLATIONS
2) ACTUAL REQUIRED PIPE DIAMETER WILL BE BASED ON THE FLOW RATE REQUIRED TO PASS THROUGH PIPE SO AS NOT TO IMPOUND WATER UPSTREAM.
3) PIPE SIZE TO BE DETERMINED AND APPROVED BY MANATEE COUNTY.

MANATEE COUNTY TRANSPORTATION DEPARTMENT			TYPICAL DRIVEWAY PIPE CROSS SECTION	102.0
REV.BY	DATE	6/12/07 DATE OF B.O.C.C. APPROVAL		

ELIPTICAL PIPE

DIMENSIONS & QUANTITIES

	Rise R	Span S	X	A	B	C	E	F	G	M Single Pipe	M Double Pipe	M Triple Pipe	M Quad. Pipe
2:1 Slope	12"	18"	2'-10"	1.97'	1.62'	3.59'	1.56'	4'	1.50'	4.92'	7.75'	10.58'	13.42'
	14"	23"	3'-4"	2.01'	1.99'	4.00'	1.89'	5'	1.90'	5.38'	8.71'	12.04'	15.38'
	19"	30"	4'-0"	2.11'	2.92'	5.05'	2.75'	6'	2.37'	6.04'	10.04'	14.04'	18.04'
	24"	38"	5'-0"	2.20'	3.85'	6.05'	3.56'	7'	2.85'	6.79'	11.79'	16.79'	21.79'
	29"	45"	5' 11"	2.34'	4.79'	7.13'	4.39'	8'	3.19'	7.50'	13.42'	19.33'	25.25'
	34"	53"	7'-0"	2.43'	5.72'	8.15'	5.23'	9'	3.57'	8.25'	15.25'	22.25'	29.25'
	38"	60"	7'-10"	2.52'	6.46'	8.98'	5.89'	9'	3.95'	8.92'	16.75'	24.58'	32.42'
	43"	68"	8'-11"	2.62'	7.39'	10.01'	6.73'	10'	4.28'	9.67'	18.58'	27.50'	36.42'
	48"	76"	9'-11"	2.71'	8.33'	11.04'	7.56'	11'	4.59'	10.42'	20.33'	30.25'	40.17'
	53"	83"	10'-8"	2.80'	9.26'	12.06'	8.39'	12'	4.77'	11.08'	21.75'	32.42'	43.08'
	58"	91"	11'-8"	2.90'	10.19'	13.09'	9.23'	13'	5.01'	11.83'	23.50'	35.17'	46.83'
4:1 Slope	12"	18"	2'-10"	2.36'	3.06'	5.42'	3.03'	5'	1.50'	4.92'	7.75'	10.58'	13.42'
	14"	23"	3'-4"	2.44'	3.75'	6.19'	3.70'	6'	1.90'	5.38'	8.71'	12.04'	15.38'
	19"	30"	4'-0"	2.62'	5.47'	8.09'	5.36	8'	2.37'	6.04'	10.04'	14.04'	18.04'
	24"	38"	5' 0"	2.79'	7.18'	9.97'	7.03'	10'	2.85'	6.79'	11.79'	16.79'	21.79'
	29"	45"	5'-11"	3.05'	8.90'	11.95'	8.70'	12'	3.19'	7.50'	13.42'	19.33'	25.25'
	34"	53"	7'-0"	3.22'	10.62'	13.84'	10.36'	13'	3.57'	8.25'	15.25'	22.25'	29.25'
	38"	60"	7'-10"	3.39'	11.99'	15.38'	11.70'	15'	3.95'	8.92'	16.75'	24.58'	32.42'
	43"	68"	8'-11"	3.56'	13.71'	17.27'	13.36'	17'	4.28'	9.67'	18.58'	27.50'	36.42'
	48"	76"	9'-11"	3.73'	15.43'	19.16'	15.03'	19'	4.59'	10.42'	20.33'	30.25'	40.17'
	53"	83"	10'-8"	3.91'	17.15'	21.06'	16.70'	20'	4.77'	11.08'	21.75'	32.42'	43.08'
	58"	91"	11'-8"	4.08'	18.87'	22.95'	18.36'	22'	5.01'	11.83'	23.50'	35.17'	46.83'

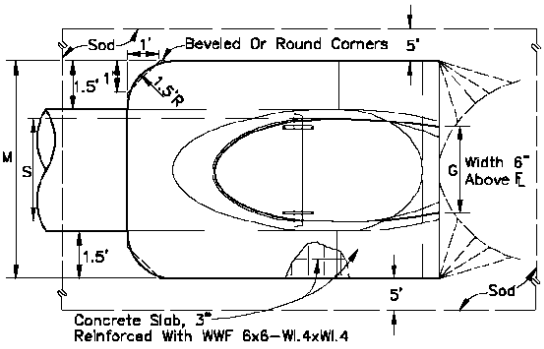

TOP VIEW-SINGLE PIPE

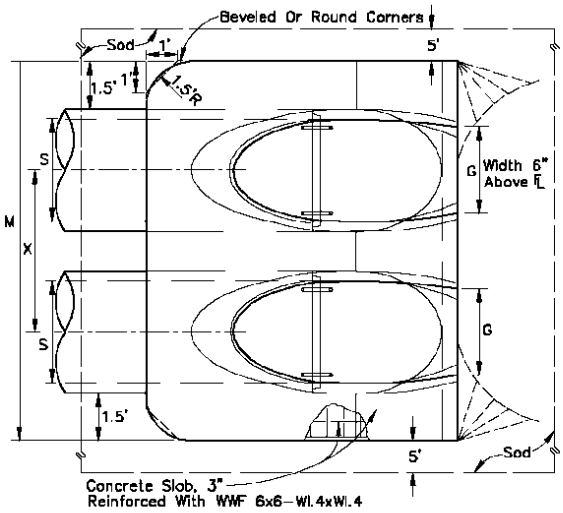

TOP VIEW-MULTIPLE PIPE

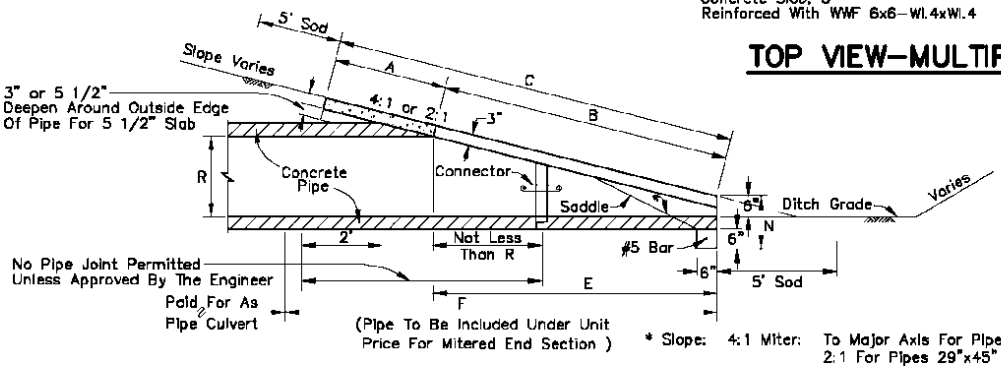

* Slope: 4:1 Miter: To Major Axis For Pipes 24"x38" And Smaller.
2:1 For Pipes 29"x45" And Larger.
2:1 Miter: To Major Axis For Pipes 29"x45" And Smaller.
1:1 For Pipes 34"x53" And Larger.

SECTION

MANATEE COUNTY TRANSPORTATION DEPARTMENT			MITERED END SECTION FOR ELIPTICAL, SINGLE, AND MULTIPLE PIPES	102.1
REV. BY	DATE	6/12/07 DATE OF B.O.C.C. APPROVAL		

ROUND PIPE

DIMENSIONS AND QUANTITIES

	D	X	A	B	C	E	F	G	M Single Pipe	M Double Pipe	M Triple Pipe	M Quad. Pipe
2:1 Slope	15"	2'-7"	1.92'	2.18'	4.10'	2.06'	5'	1.22'	4.63'	7.21'	9.79'	12.37'
	18"	2' 10"	1.97'	2.74'	4.71'	2.56'	6'	1.41'	4.92'	7.75'	10.58'	13.42'
	24"	3' 5"	2.06'	3.85'	5.91'	3.56'	7'	1.73'	5.50'	8.92'	12.33'	15.75'
	30"	4'-3"	2.15'	4.95'	7.10'	4.56'	8'	2.00'	6.08'	10.33'	14.58'	18.83'
	36"	5'-1"	2.25'	6.08'	8.33'	5.56'	9'	2.24'	6.67'	11.75'	16.83'	21.92'
	42"	6'-0"	2.34'	7.21'	9.55'	6.56'	10'	2.45'	7.25'	13.25'	19.25'	25.25'
	48"	6'-9"	2.43'	8.33'	10.76'	7.56'	11'	2.65'	7.83'	14.58'	21.33'	28.08'
	54"	7'-8"	2.52'	9.44'	11.96'	8.56'	12'	2.83'	8.42'	16.08'	23.75'	31.42'
	60"	8'-6"	2.62'	10.56'	13.18'	9.56'	14'	3.00'	9.00'	17.50'	26.00'	34.50'
	66"	9'-2"	2.71'	11.68'	14.39'	10.56'	15'	3.18'	9.58'	18.75'	27.92'	37.08'
	72"	10'-0"	2.80'	12.80'	15.60'	11.56'	16'	3.30'	10.16'	20.16'	30.16'	40.16'
4:1 Slope	15"	2'-7"	2.27'	4.09'	6.36'	4.03'	8'	1.22'	4.63'	7.21'	9.79'	12.37'
	18"	2'-10"	2.36'	5.12'	7.48'	5.03'	9'	1.41'	4.92'	7.75'	10.58'	13.42'
	24"	3' 5"	2.53'	7.18'△	9.71'	7.03'△	11'	1.73'	5.50'	8.92'	12.33'	15.75'
	30"	4'-3"	2.70'	9.25'	11.95'	9.03'	13'	2.00'	6.08'	10.33'	14.58'	18.83'
	36"	5'-1"	2.87'	11.31'◇	14.18'	11.03'◇	15'	2.24'	6.67'	11.75'	16.83'	21.92'
	42"	6'-0"	3.05'	13.37'	16.42'	13.03'	17'	2.45'	7.25'	13.25'	19.25'	25.25'
	48"	6'-9"	3.22'	15.43'	18.65'	15.03'	19'	2.65'	7.83'	14.58'	21.33'	28.08'
	54"	7'-8"	3.39'	17.49'	20.88'	17.03'	21'	2.83'	8.42'	16.08'	23.75'	31.42'
	60"	8'-6"	3.56'	19.55'	23.11'	19.03'	23'	3.00'	9.00'	17.50'	26.00'	34.50'
	66"	9'-2"	3.73'	21.62'	25.35'	21.03'	25'	3.18'	9.58'	18.75'	27.92'	37.08'
	72"	10'-0"	3.91'	22.68'	26.59'	23.03'	27'	3.30'	10.16'	20.16'	30.16'	40.16'

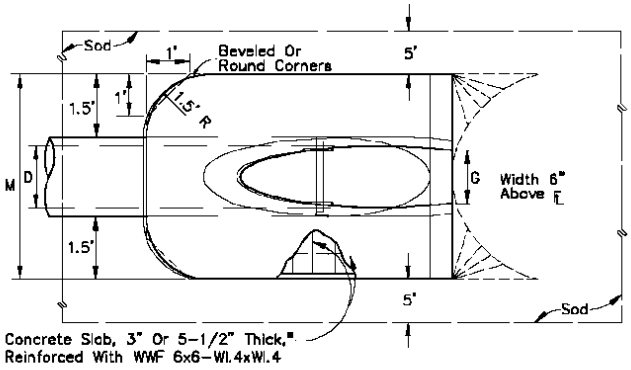

TOP VIEW—SINGLE PIPE

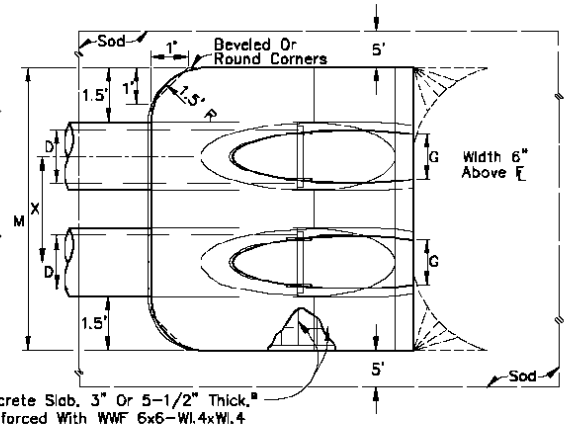

TOP VIEW—MULTIPLE PIPE

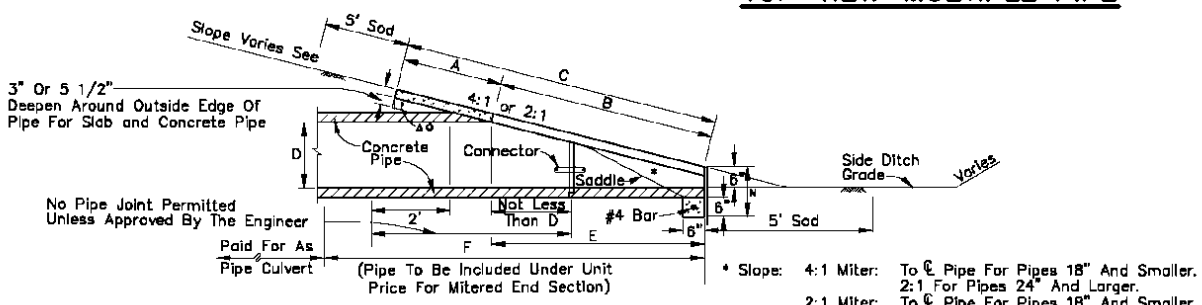

* Slope: 4:1 Miter: To ℄ Pipe For Pipes 18" And Smaller. 2:1 For Pipes 24" And Larger.
2:1 Miter: To ℄ Pipe For Pipes 18" And Smaller. 1:1 For Pipes 24" And Larger.

SECTION

MANATEE COUNTY TRANSPORTATION DEPARTMENT			MITERED END SECTION FOR ROUND, SINGLE & MULTIPLE PIPES	102.2
REV.BY	DATE			
		6/12/07 DATE OF B.O.C.C. APPROVAL		

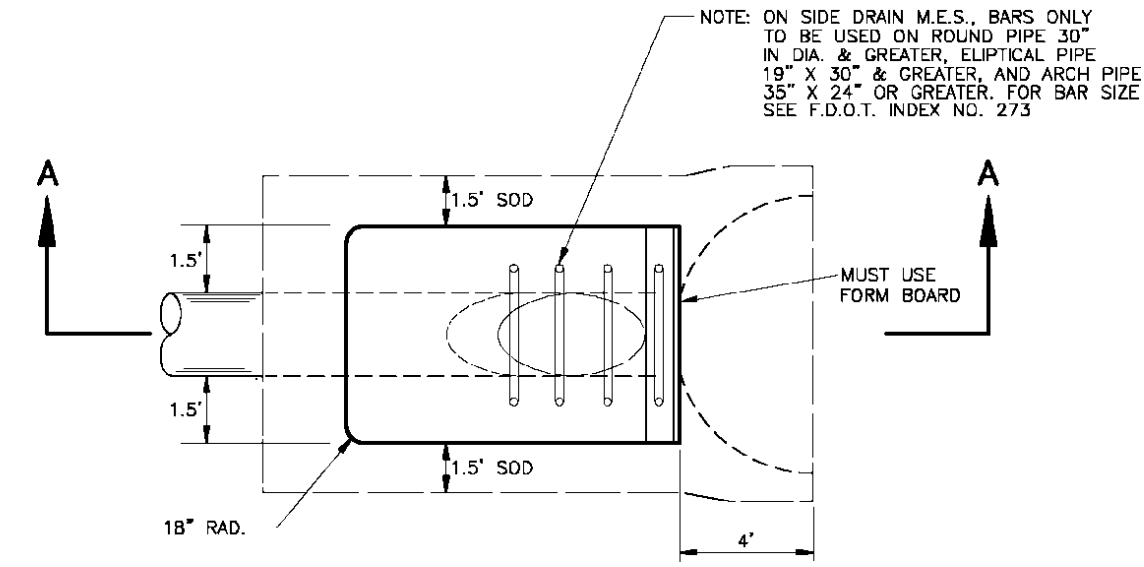

PLAN VIEW

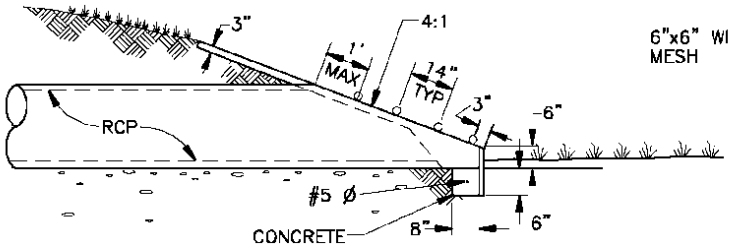

SECTION A–A

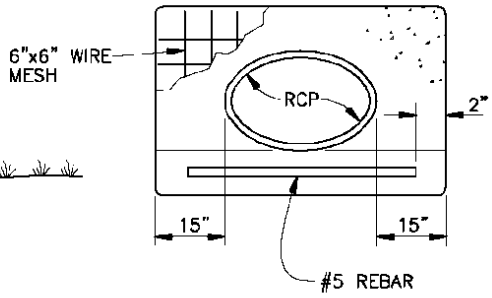

END VIEW

SOD TO BE PLACED 1.5 FT AROUND THE PERIMETER OF THE WALL, SOD TO BE BAHIA; ST. AUGUSTINE SOD WHERE THERE IS TIDAL, HEAVY CONCENTRATION OF SALT, OR SURROUNDING PROPERTY IS ST. AUGUSTINE.

MANATEE COUNTY TRANSPORTATION DEPARTMENT			DRIVEWAY AND ROAD PIPE MITERED END SECTION	103.0
REV.BY	DATE	6/12/07 DATE OF B.O.C.C. APPROVAL		

NOTE: FILTER FABRIC NOT REQUIRED WHEN AN O-RING GASKET IS USED.

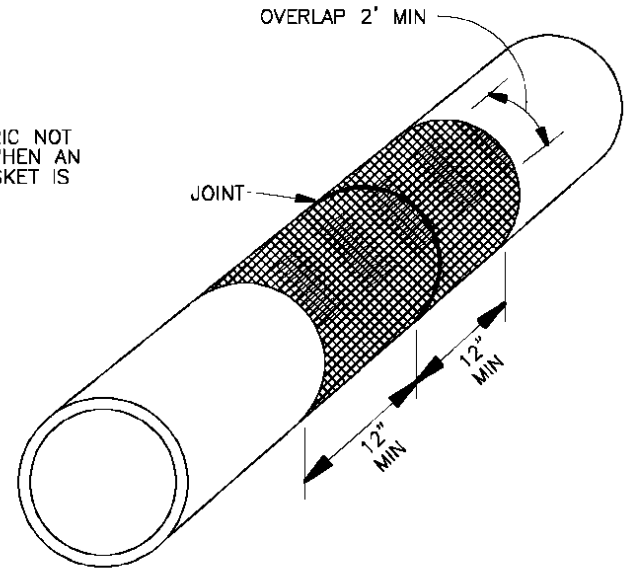

ISOMETRIC VIEW

NOTE: FILTER FABRIC MATERIAL MUST MEET THE FOLLOWING ASTM REQUIREMENTS:

ASTM D 4595
ASTM D 4632
ASTM D 4533
ASTM D 4833
ASTM D 4491

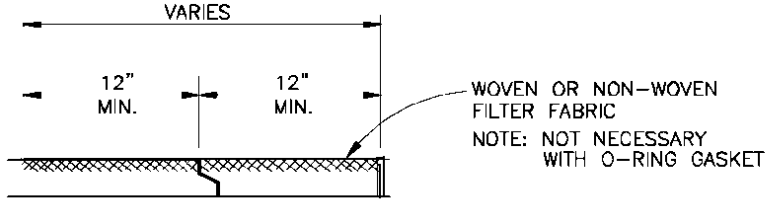

BUTT JOINT

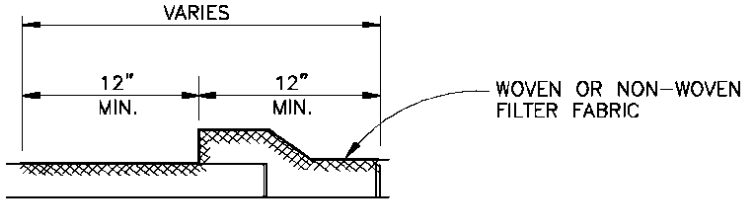

BELL JOINT

MANATEE COUNTY TRANSPORTATION DEPARTMENT			FILTER FABRIC JACKET	104.0
REV.BY	DATE			
		6/12/07 DATE OF B.O.C.C. APPROVAL		

APPENDIX F: SIDEWALK DETAILS

INDEX

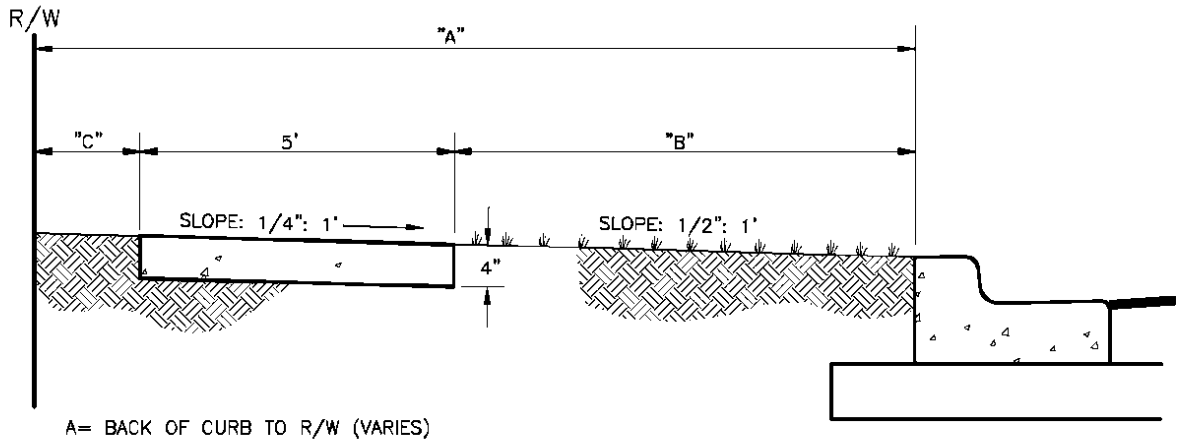

A= BACK OF CURB TO R/W (VARIES)
B= UNPAVED AREA (VARIES). REFER TO F.D.O.T. GREEN BOOK, TABLE 3-12, LATEST REVISION.
C= VARIES, SEE 401 SERIES

TYPICAL SIDEWALK LOCATION

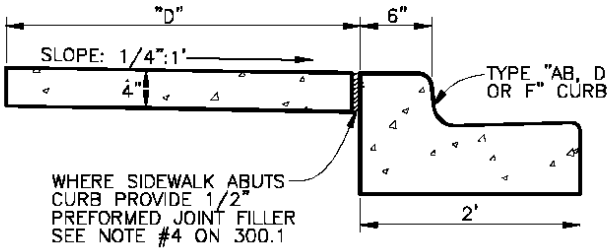

D= SIDEWALK WIDTH SHALL BE 6' STANDARD, WHERE WALK ABUTS TYPE "AB, D OR F" CURB. WHERE SPEED LIMIT IS 25 MPH OR LESS, WIDTH CAN BE 5'-6".

* SEE SHEET 300.1 "GENERAL NOTES" FOR FURTHER INFORMATION

ALTERNATE SIDEWALK LOCATION

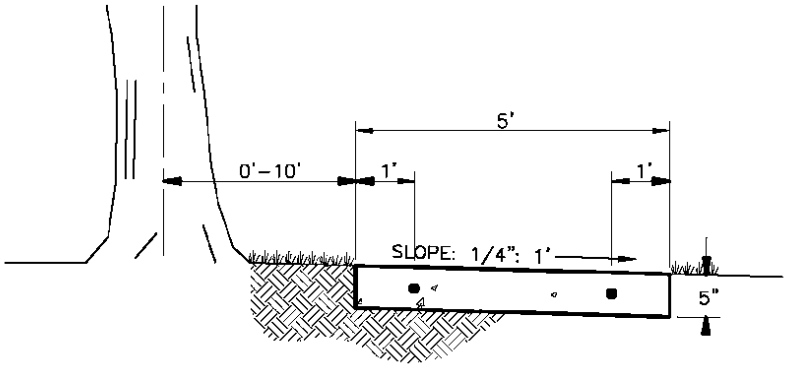

SIDEWALK LOCATION CLOSE TO TREES

MANATEE COUNTY TRANSPORTATION DEPARTMENT			SIDEWALK REQUIREMENTS	301.1
REV.BY	DATE	6/12/07 DATE OF B.O.C.C. APPROVAL		

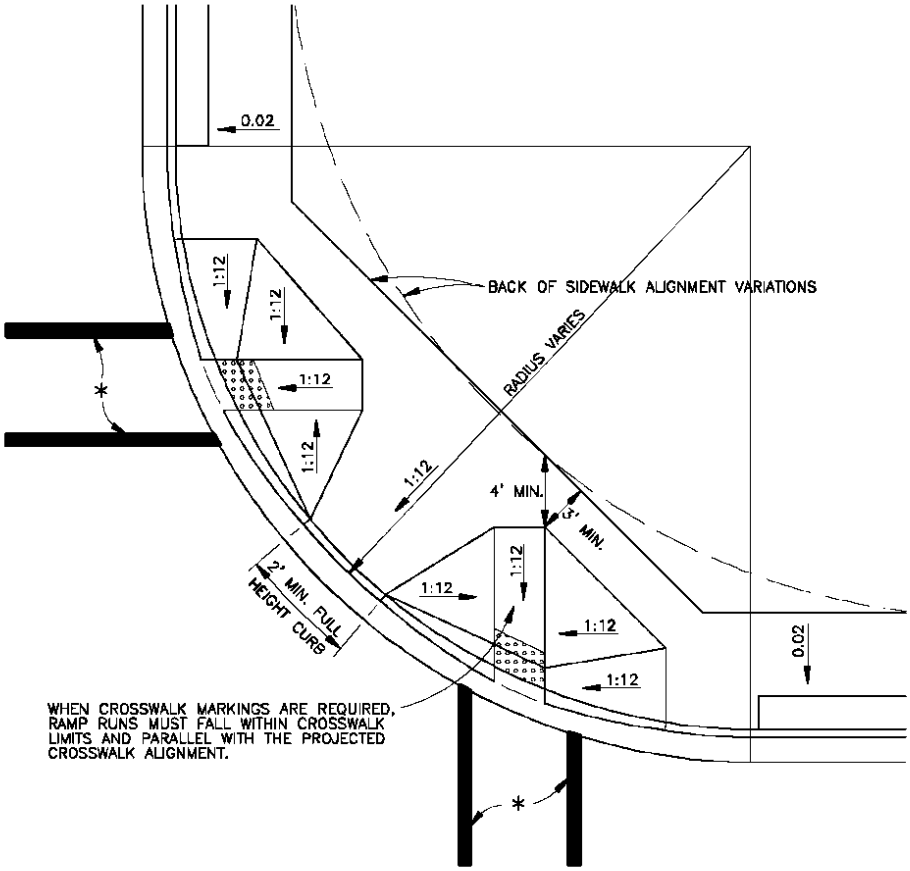

* CROSSWALK WIDTHS AND CONFIGURATION VARY; MUST CONFORM TO FDOT INDEX NO. 17344 AND 17346.

1) CURB CUT RAMPS ARE TO BE LOCATED AS SHOWN ON PLANS.

2) SEE SHEETS # 300.1 "GENERAL NOTES" & # 301.2 "HANDICAPPED RAMP" SHT 2 FOR FURTHER REQUIREMENTS.

3) RADIUS OF CURB VARIES AS FOLLOWS:

   A) 25' RAD. LOCAL STREET WITH ALLEY.
   B) 25' RAD. LOCAL STREET WITH LOCAL STREET.
   C) 35' RAD. LOCAL STREET WITH THOROUGHFARE OR COLLECTOR.
   D) 50' RAD. THOROUGHFARE WITH THOROUGHFARE

4) CURB RADIUS SHOULD BE A MINIMUM OF 50' WHERE INDUSTRIAL AND BUS TRAFFIC (5% OR MORE) IS ANTICIPATED ON LOWER CLASSIFICATION ROADWAYS.

5) BOTH LOCATION OPTIONS FOR HANDICAPPED RAMP ARE SHOWN. ENGINEER MAY SELECT EITHER, WHICHEVER FITS THE SITUATION.

NOTE: FOR COMPLETE HANDICAP, PUBLIC SIDEWALK AND CURB RAMP DETAILS, SEE F.D.O.T. DESIGN STANDARDS, 2006 EDITION, INDEX 304, SHEETS 1 THROUGH 6.

MANATEE COUNTY TRANSPORTATION DEPARTMENT			HANDICAPPED RAMP SHEET 1	302.1
REV.BY	DATE	6/12/07 DATE OF B.O.C.C. APPROVAL		

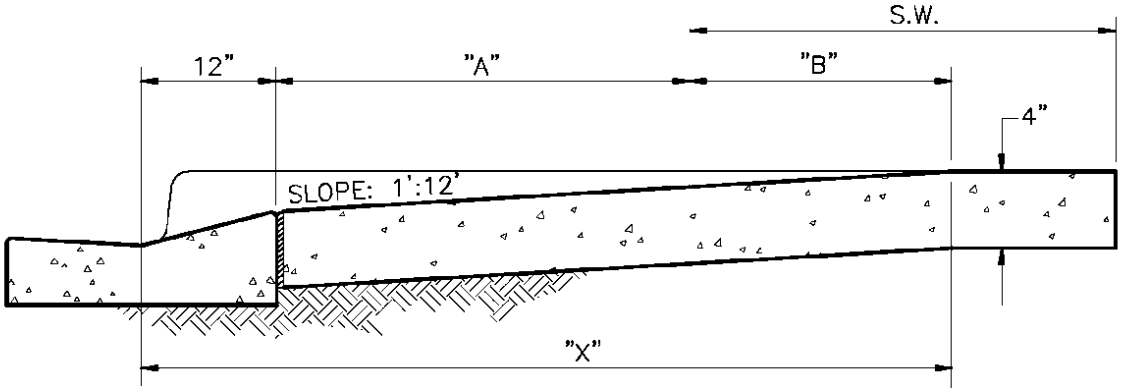

SECTION A–A
(SEE SHEET 301.0)

S.W.= SIDEWALK	"A"	S.W.+ A + 10"	"X"	"B"
5'	0	5.8'	5.8'	5'
6'	0	6.8'	6.8'	6'
7'	0	7.8'	7.3'	6.5'
8'	0	8.8'	7.3'	6.5'
5'	2'	7.8'	7.8'	5'
5'	2.5'	8.3'	8.1'	4.8'
5'	3'	8.8'	8.2'	4.4'
5'	3.5'	9.3'	8.4'	4.1'
5'	4'	9.8'	8.6'	3.8'
5'	4.5'	10.3'	8.7'	3.4'
5'	5'	10.8'	9.1'	3.1'

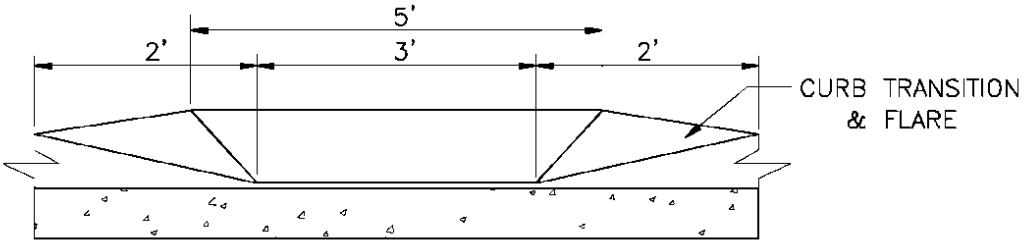

SECTION B–B
(SEE SHEET 301.0)

NOTE: FOR COMPLETE HANDICAP, PUBLIC SIDEWALK AND CURB RAMP DETAILS, SEE F.D.O.T. DESIGN STANDARDS, 2006 EDITION, INDEX 304, SHEETS 1 THROUGH 6.

MANATEE COUNTY TRANSPORTATION DEPARTMENT			HANDICAPPED RAMP SHEET 2	302.2
REV.BY	DATE	6/12/07 DATE OF B.O.C.C. APPROVAL		

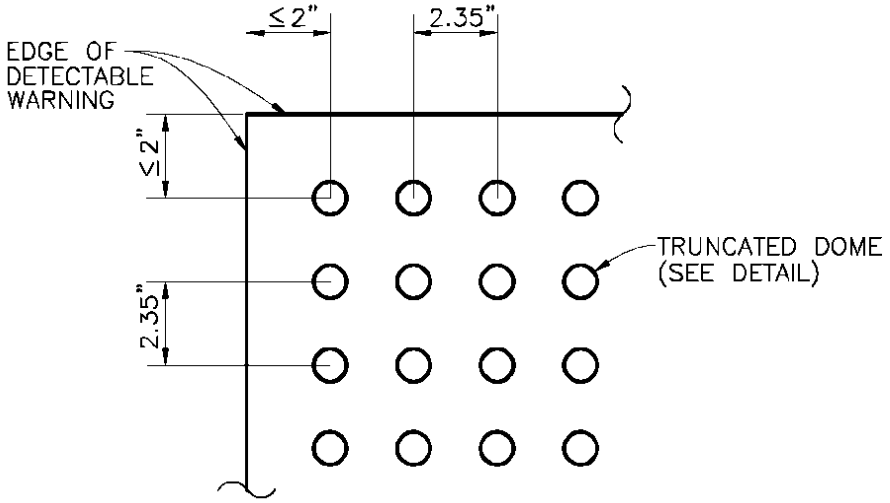

PLAN VIEW

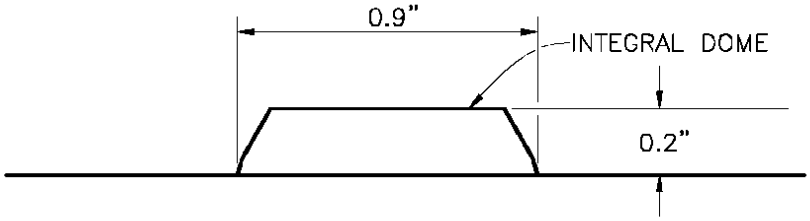

TRUNCATED DOME

CURB RAMP DETECTABLE WARNING DETAIL

NOTES:

DETECTABLE WARNINGS ON WALKING SURFACES

THE DETECTABLE WARNING SHALL EXTEND THE FULL WIDTH AND DEPTH OF THE CURB RAMP.

DETECTABLE WARNINGS SHALL CONSIST OF RAISED TRUNCATED DOMES WITH A DIAMETER OF NOMINAL 0.9 INCH, A HEIGHT OF NOMINAL 0.2 INCH AND A CENTER-TO-CENTER SPACING OF NOMINAL 2.35 INCH AND SHALL CONTRAST VISUALLY WITH ADJOINING SURFACES, EITHER LIGHT-ON-DARK, OR DARK-ON-LIGHT.

THE MATERIAL USED TO PROVIDE CONTRAST SHALL BE AN INTEGRAL PART OF THE WALKING SURFACE. DETECTABLE WARNINGS USED ON INTERIOR SURFACES SHALL DIFFER FROM ADJOINING WALKING SURFACES IN RESILIENCY OR SOUND-ON-CANE CONTACT.

THE MATERIAL USED TO PROVIDE CONTRAST SHOULD CONTRAST BY AT LEAST 70%. CONTRAST IN PERCENT IS DETERMINED BY:

$$\text{CONTRAST} = [(B1-B2)/B1] \times 100$$

WHERE B1 = LIGHT REFLECTANCE VALUE (LRV) OF THE LIGHTER AREA AND B2 = LIGHT REFLECTANCE VALUE (LRV) OF THE DARKER AREA.

NOTE THAT IN ANY APPLICATION BOTH WHITE AND BLACK ARE NEVER ABSOLUTE; THUS, B1 NEVER EQUALS 100 AND B2 IS ALWAYS GREATER THAN 0.

MANATEE COUNTY TRANSPORTATION DEPARTMENT			CURB RAMP DETECTABLE WARNINGS	302.3
REV.BY	DATE	6/12/07 DATE OF B.O.C.C. APPROVAL		