FUNCTION SYMBOL SCHEDULE

FIRST LETTER			SUCCEEDING–LETTERS		
	MEASURED OR INITIATING VARIABLE	MODIFIER	READOUT OR PASSIVE FUNCTION	OUTPUT FUNCTION	MODIFIER
A	Analysis		Alarm		
B	Burner, Combustion		Programmer		
C	Conductivity (Electrical)			Control	Closed
D	Density or Specific Gravity	Differential			
E	Voltage		Sensor (Primary Element)	Eduction	
F	Flow Rate	Ratio (Fraction)			
G	Gaging		Glass, Viewing Device		
H	Hand				High
I	Current (Electrical)		Indicate		
J	Power	Scan			
K	Time, Time Schedule			Control Station	
L	Level		Light (Pilot)		Low
M	Motor				Middle, Intermediate
N	Vibration				
O	Operation	Offset	Orifice, Restriction		Open
P	Pressure, Vacuum		Point (Test) Connection		
Q	Quantity, Event	Integrate, Totalize	Integrate		
R	Radiation		Record, Print	Regulate	
S	Speed, Frequency	Safety		Switch	
T	Temperature			Transmit	
U	Multivariable	Trend	Multifunction	Multifunction	Multifunction
V	Viscosity	Vacuum		Valve, Damper, Louver, Gate	
W	Weight, Force, Torque		Well		
X	Unclassified		Unclassified	Unclassified	Unclassified
Y				Relay, Compute, Convert	
Z	Position			Final Control Element	Drive, Actuator, Unclassified Final Control Element

BASIC SYMBOLS

MULTIPLE FUNCTION

- FIELD MOUNTED INSTRUMENT OR DEVICE
- FRONT OF PANEL MOUNTED INSTRUMENT ON UCP OR MCC, VFD
- REAR OF PANEL MOUNTED INSTRUMENT ON UCP OR MCC, VFD
- FRONT OF PANEL MOUNTED INSTRUMENT ON MAIN PANEL
- REAR OF PANEL MOUNTED INSTRUMENT ON MAIN PANEL
- PLC AND/OR COMPUTER SOFTWARE COMPONENT (OPERATOR ACCESSIBLE UNDER NORMAL CONDITIONS)
- PLC AND/OR COMPUTER GENERATED COMPONENT (NOT OPERATOR ACCESSIBLE UNDER NORMAL CONDITIONS)
- PLC INPUT/OUTPUT

LINE CODES

- INSTRUMENT SIGNAL
- ELECTRICAL SIGNAL
- DATA LINK
- PNEUMATIC
- CAPILLARY
- SONIC OR R.F.
- HYDRAULIC
- TELEPHONE
- NO ELECTRICAL CONNECTION
- ELECTRICAL CONNECTIONS (INDICATED BY DOTS)
- HEAT TRACED PROCESS
- LINE OR EQUIPMENT
- MATCHLINE
- SHEET — PROCESS LINE OR ELECTRICAL SIGNAL CONTINUATION TO/FROM SHEET NUMBER INDICATED
- CONTINUATION ON SAME SHEET
- CONTINUATION ON FACILITIES
- NOT SHOWN ON DRAWINGS

VALVES, PUMPS & METERS

- FLAME ARRESTOR
- PINCH VALVE
- GATE
- NEEDLE
- BUTTERFLY
- BALL OR ROTARY
- GLOBE
- PLUG OR COCK
- DIAPHRAGM
- CHECK
- DIAPHRAGM CHECK
- CONTROL VALVE
- POSITIONER
- PRESSURE REGULATING VALVE
- BACKPRESSURE REGULATING VALVE
- PISTON OPERATED
- S=SOLENOID OPERATED
- M=MOTOR OPERATED
- P=PNEUMATIC OPERATED
- DRAIN
- Y=WEIR GATE
- T=SLIDE SLUICE GATE
- I =STOP LOG
- BLIND FLANGE
- PULSATION DAMPENER
- PRESSURE RELIEF OR SAFETY
- 3–WAY
- 4–WAY
- TELESCOPING
- REDUCER
- HOSE CONNECTION
- WAFER/CHECK VALVE
- UNION

VALVES, PUMPS & METERS (CONT'D)

- FLOAT SWITCH OR FLOAT
- (ARV) AIR RELEASE VALVE
- (ARVV) AIR VACUUM RELEASE VALVE
- ELECTRIC MOTOR
- ORIFICE/ANNUBAR
- AIR DIFFUSER
- LIQUID DIFFUSER
- CAPACITANCE METER
- REGULATOR/FILTER
- SUBMERSIBLE PUMP
- MAGNETIC METER (INLINE/INSERT)
- ULTRASONIC METER
- VENTURI OR FLOW TUBE
- PROPELLER OR TURBINE METER
- DOPPLER OR TRANSIT TIME FLOW METER
- ROTAMETER
- PROGRESSING CAVITY PUMP
- CENTRIFUGAL PUMP
- POSITIVE DISPLACEMENT PUMP
- DIAPHRAGM OR METERING PUMP
- EDUCTOR
- STRAINER
- DIAPHRAGM ISOLATOR
- HORN
- GRADUATED MEASURING CYLINDER
- CYLINDER HYDRAULIC OR PNEUMATIC
- LATERAL WYE
- RUPTURE DISK
- RESTRAINED FLEX CONN.
- FLEX CONN.
- FILTER AIR/WATER
- CENTRIFUGAL BLOWER
- POSITIVE DISPLACEMENT BLOWER
- VERTICAL TURBINE PUMP
- MANUAL BAR RACK
- MIXER
- SUBMERSIBLE AERATOR/MIXER (ELECTRIC MOTOR DRIVEN)

MISCELLANEOUS SYMBOLS

- PURGE CONNECTION
- SAMPLE POINT
- INTERLOCK
- MULTIPLY
- DIVIDE
- HIGH SELECT
- LOW SELECT
- SQUARE ROOT
- SUM (ALGEBRAIC)
- SPECIAL FUNCTION
- R+B — RATIO PLUS BIAS
- dL/dt — RATE OF RISE (LEVEL)

EQUIPMENT NOTATION

B = BLOWER OR FAN
E = ENGINE
G = GENERATOR
F = FILTER
GS = GRINDER/SCREEN
K = COMPRESSOR
H = HOIST
ME = MECHANICAL EQUIPMENT
MX = MIXER
P = PUMP
R = HEAT EXCHANGER
T = TANK OR SUMP

VALVE DESIGNATIONS

HV = HAND VALVE
FCV = FLOW CONTROL VALVE (MODULATING)
PRV = PRESSURE REGULATING VALVE
LCV = LEVEL CONTROL VALVE
FV = FLOW VALVE (NON–MODULATING)
MV = MUD VALVE
TV = TELESCOPING VALVE
CV = CHECK VALVE
MOV = MOTOR OPERATED VALVE

INSTRUMENT TAG NOTATION

FIC 0 1 01 A

- A — INSTRUMENT QUANTITY SUFFIX
- 01 — INSTRUMENT NUMBER
- 1 — PROCESS AREA
- 0 — PLANT AREA
- FIC — ISA INSTRUMENT FUNCTION

VALVE OPERATION NOTATION

EFC = ELECTRIC FAIL CLOSE
AFC = AIR FAIL CLOSE
EFO = ELECTRIC FAIL OPEN
AFO = AIR FAIL OPEN
AFS = AIR FAIL STATIC
EFS = ELECTRIC FAIL STATIC

CONTROLLER NOTATION

PV = PROCESS VARIABLE INPUT
SP = SET POINT INPUT
C = CONTROL OUTPUT

PLC NOTATIONS

AI = ANALOG INPUT
AO = ANALOG OUTPUT
DI = DISCRETE INPUT
DO = DISCRETE OUTPUT
D/A = DISCRETE TO ANALOG CONVERTOR
SSDC = SURGE SUPPRESSION DEVICE

HAND SWITCH NOTATION

HOA = HAND–OFF–AUTO
S/S = START/STOP
SEL = SELECTOR
O/C = OPEN/CLOSE
O/O = ON/OFF
LOS = LOCKOUT–START
D/S = DUTY/STANDBY
FOS = FAST–OFF–SLOW
OAC = OPEN–AUTO–CLOSE
OOCA = OPEN–OFF–CLOSE–AUTO
ROF = REVERSE–OFF–FORWARD
ROL = RAISE–OFF–LOWER
F/R = FORWARD/REVERSE
HOR = HAND–OFF–REMOTE
LOR = LOCAL–OFF–REMOTE
SAR = SILENCE–AUTO–RESET

MISCELLANEOUS NOTATIONS

S/D = SHUTDOWN
O/R = OVERRIDE
MCC = MOTOR CONTROL CENTER
VFD = VARIABLE FREQUENCY DRIVE
UCP = UNIT CONTROL PANEL
LCP = LOCAL CONTROL PANEL
MCP = MASTER CONTROL PANEL
ES = ELECTRICAL SUPPLY
IS = INLET SILENCER
DS = DISCHARGE SILENCER
SEQ = SEQUENCER/ALTERNATOR
SA = SURGE ARRESTOR
DO = DISSOLVED OXYGEN
ETM = ELAPSED TIME METER
TURB = TURBIDITY
US = ULTRASONIC

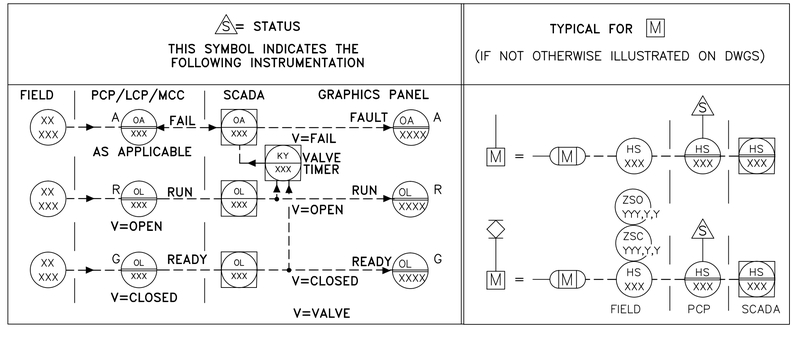

REV.NO.	DESCRIPTIONS	DATE

REVISIONS

SEAL: MICHAEL T. WEIDER — LICENSED — No 60940 — STATE OF FLORIDA — PROFESSIONAL ENGINEER

SEAL

McKIM&CREED
1365 Hamlet Avenue
Clearwater, Florida 33756
Phone: (727)442–7196, Fax: (727)461–3827
CA Lic. No. 29588
www.mckimcreed.com

Manatee County FLORIDA

MANATEE COUNTY WTP BIOLOGICAL TREATMENT UNIT

INSTRUMENTATION & CONTROL SYSTEM GENERAL NOTES, LEGENDS AND ABBREVIATIONS

DATE:	OCTOBER 2015
MCE PROJ. #	1024–0167
DRAWN	RRO
DESIGNED	MDT
CHECKED	JSL
PROJ. MGR.	PJL

SCALE — HORIZONTAL: NA — VERTICAL: NA

DRAWING NUMBER: I-0.1

STATUS: ISSUE FOR BID — REVISION

C:\Users\rosegrade\Manatee WTP (Biological Filters)\ABC_Legend_1024-0167-0_1.dwg 9/30/2015 11:25:04 AM, Rebecca Desgrade

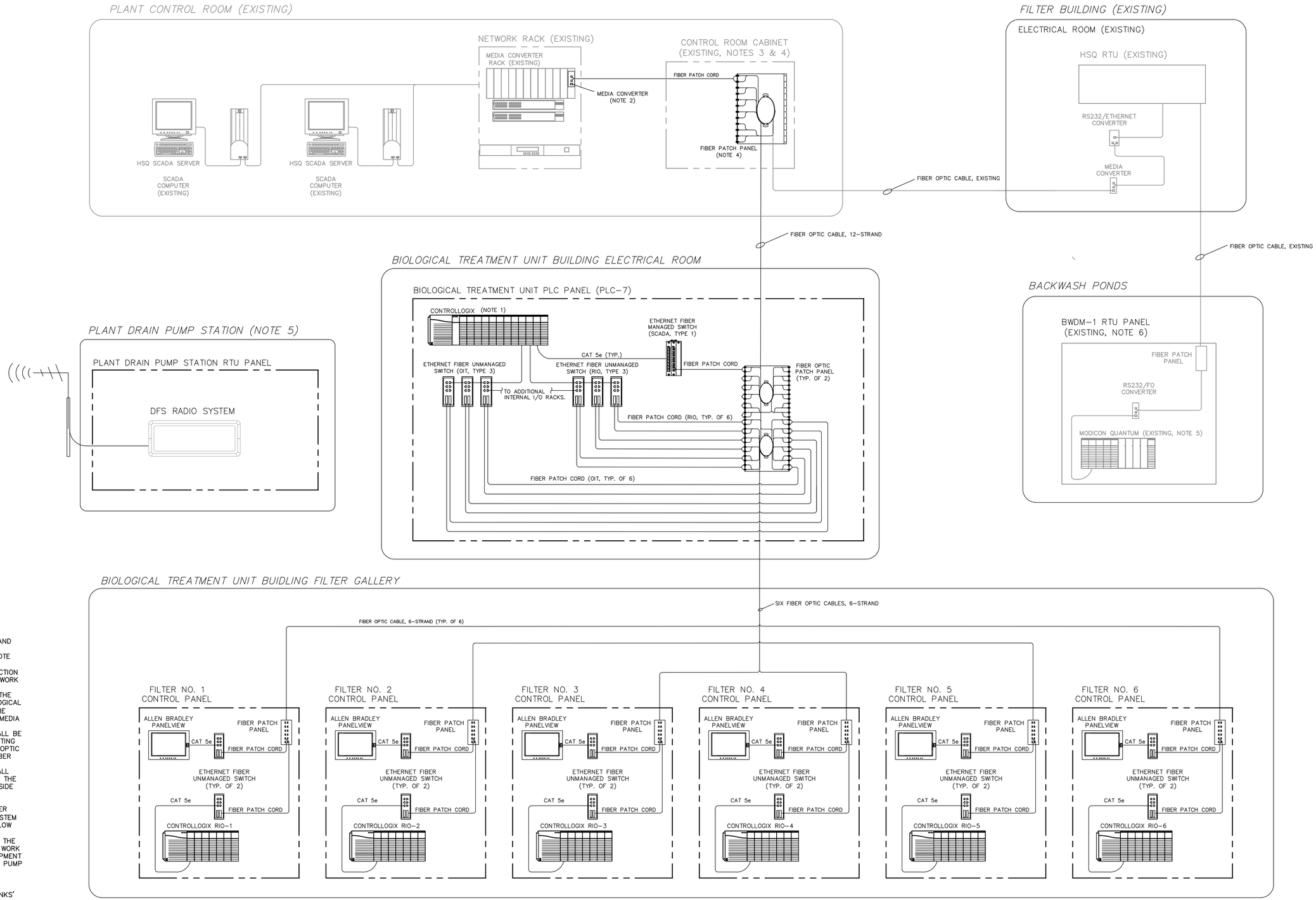

NOTES:

1. PROVIDE SEPARATE NETWORK SWITCHES AND PLC NETWORK CARDS IN PLC-7 FOR CONNECTION OF FILTER PANEL OITs, REMOTE I/O, AND SCADA SYSTEM ON SEPARATE NETWORKS. REFER TO SPECIFICATION SECTION 13330 FOR THE SPECIFIED TYPES OF NETWORK SWITCHES SHOWN.
2. PROVIDE A NEW MEDIA CONVERTER FOR THE NEW NETWORK CONNECTION TO THE BIOLOGICAL FILTERS' PLC-7. MOUNT AND LOCATE THE NEW MEDIA CONVERTER IN THE EXISTING MEDIA CONVERTER RACK.
3. THE NEW FIBER OPTIC PATCH PANEL SHALL BE PROVIDED AND MOUNTED INSIDE THE EXISTING CONTROL ROOM CABINET FOR THE FIBER OPTIC TERMINATION OF THE NEW 12-STRAND FIBER OPTIC CABLE.
4. THE NEW FIBER OPTIC PATCH PANEL SHALL BE ADEQUATELY SIZED TO ACCOMMODATE THE EXISTING FIBER OPTIC CABLE LOCATED INSIDE THE EXISTING CONTROL ROOM CABINET.
5. THE PLANT DRAIN PUMP STATION SHALL COMMUNICATE WITH THE SOUTHEAST WATER RECLAMATION FACILITY (SEWRF)SCADA SYSTEM VIA RADIO SYSTEM PROVIDED BY DATA FLOW SYSTEM (DFS). REFER TO SPECIFICATION SECTION 11304 AND DRAWING M-2.1 FOR THE SPECIFICS OF THESE REQUIREMENTS AND WORK DESCRIPTION OF THE SERVICES AND EQUIPMENT PROVIDED BY DFS FOR THE PLANT DRAIN PUMP STATION.
6. THE EXISTING MODICON PLC SHALL BE MODIFIED TO ACCOMMODATE MONITORING AND CONTROL OF THE EQUALIZATION TANKS' EQUIPMENT THROUGH THE HSQ SYSTEM.

REV.NO.	DESCRIPTIONS	DATE

REVISIONS

SEAL

MICHAEL TWEEDEL LICENSE No 60940 STATE OF FLORIDA PROFESSIONAL ENGINEER

SEAL

McKIM&CREED
1365 Hamlet Avenue
Clearwater, Florida 33756
Phone: (727)442-7196, Fax: (727)461-3827
CA Lic. No. 29588
www.mckimcreed.com

Manatee County FLORIDA

MANATEE COUNTY
WTP BIOLOGICAL TREATMENT UNIT

PROCESS CONTROL
SCADA SYSTEM
NETWORK DIAGRAM

DATE:	OCTOBER 2015
MCE PROJ. #	1024-0167
DRAWN	RRO
DESIGNED	MDT
CHECKED	JSL
PROJ. MGR.	PJL

SCALE
HORIZONTAL: NA
VERTICAL: NA

DRAWING NUMBER
I-0.2

STATUS: ISSUE FOR BID
REVISION

C:\Users\rrosquete\Manatee WTP (Biological Filters)\01024-0167-0_2.dwg, 9/30/2015 11:23:37 AM, Rebecca Dasquete

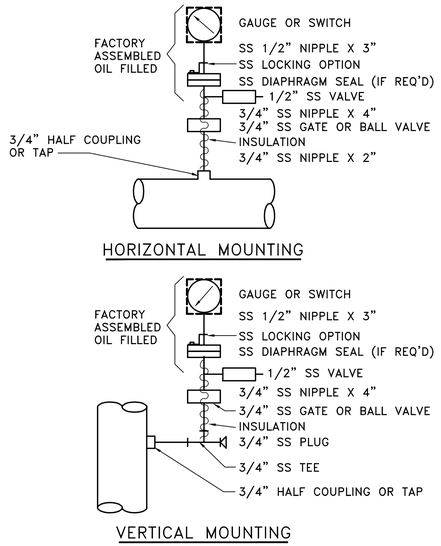

TYPICAL PRESSURE INDICATOR/ SWITCH PIPING DETAIL

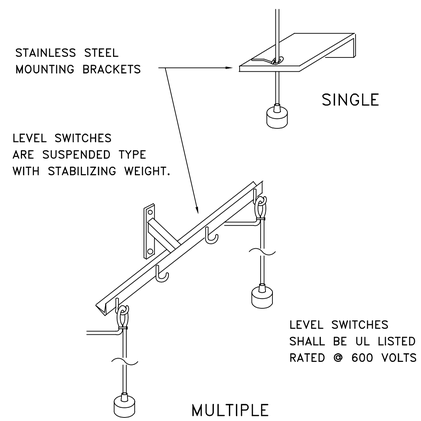

TYPICAL LEVEL SWITCH MOUNTING DETAIL

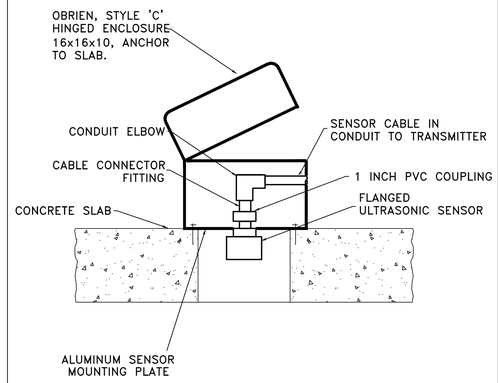

ULTRASONIC SENSOR MOUNTING DETAIL

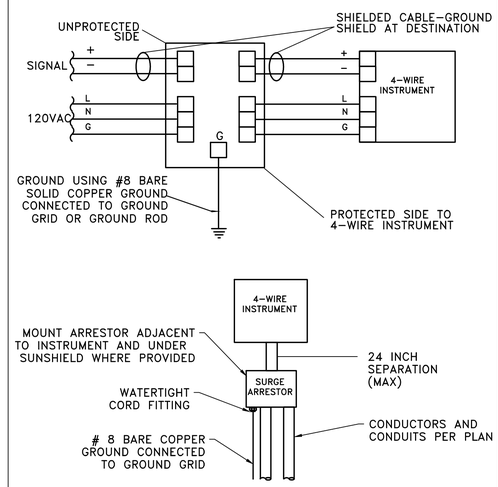

4–WIRE INSTRUMENT SURGE ARRESTOR INSTALLATION

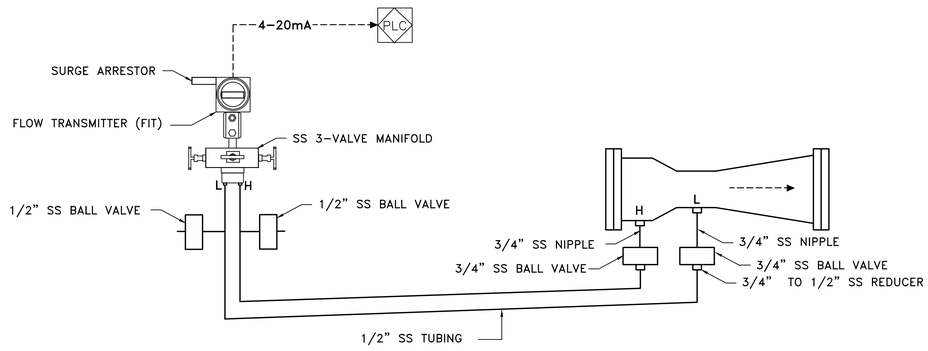

NOTES:
1. IF PIPING LENGTH EXTENDS OVER 26 FEET, BETWEEN THE PIPE AND FLOW METER, USE 3/4" SS TUBING.
2. SLOPE SENSE TUBING FROM VENTURI TO TRANSMITTER CONTINUOUSLY IN ONE DIRECTION AT ONE INCH PER FOOT.
3. PROVIDE INSULATION TO ALL EXPOSED SS SENSE TUBING TO PROTECT FROM FREEZING.
4. ORIENT VENTURI SO PRESSURE SENSE TAPS ARE LOCATED HORIZONTALLY.
5. PROVIDE VENT CLEANERS AND ADDITIONAL SS VALVES (NOT SHOWN) FOR RAPID MIX A AND RAPID MIX B VENTURI FLOW METER INSTALLATIONS. VENT CLEANERS AND VALVES SHALL BE INSTALLED AS SPECIFIED BY MANUFACTURER'S INSTRUCTIONS.

TYPICAL VENTURI FLOW METER

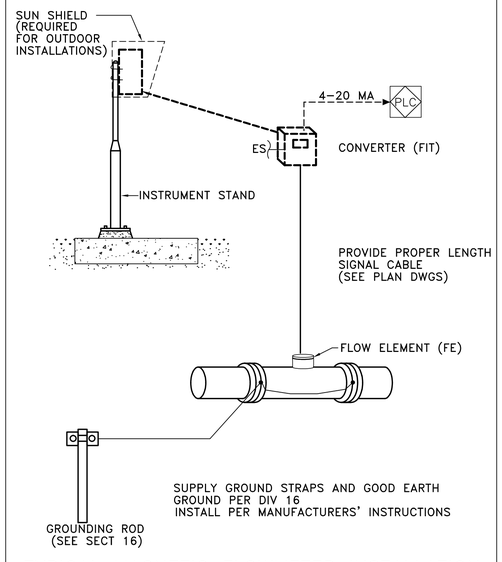

TYPICAL MAGNETIC FLOWMETER INSTALLATION

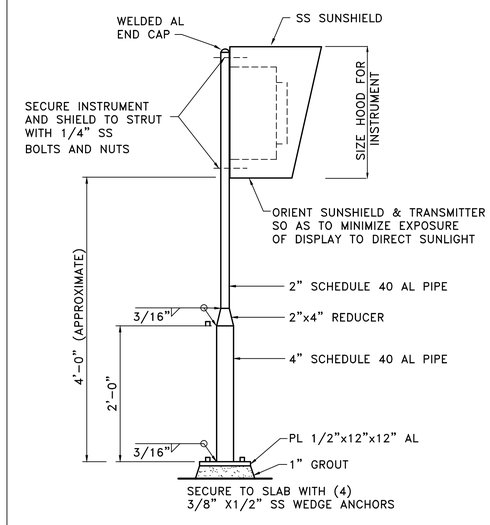

SINGLE INSTRUMENT STANCHION MOUNT DETAIL

REV.NO.	DESCRIPTIONS	DATE

REVISIONS

SEAL

SEAL

McKIM&CREED
1365 Hamlet Avenue
Clearwater, Florida 33756
Phone: (727)442–7196, Fax: (727)461–3827
CA Lic. No. 29588
www.mckimcreed.com

Manatee County FLORIDA

MANATEE COUNTY
WTP BIOLOGICAL TREATMENT UNIT

INSTRUMENTATION INSTALLATION DETAILS

DATE:	OCTOBER 2015
MCE PROJ. #	1024–0167
DRAWN	RRO
DESIGNED	MDT
CHECKED	JSL
PROJ. MGR.	PJL

SCALE
HORIZONTAL: NA
VERTICAL: NA

DRAWING NUMBER
I-0.3

STATUS: ISSUE FOR BID
REVISION

C:\Users\rrosquete\Manatee WTP (Biological Filters)\01024-0167-0_3.dwg, 9/30/2015 11:28:52 AM, Rebecca Dasquete

NOTES:
1. STILLING WELL LENGTH SHALL EXTEND THE DEPTH OF THE MEASURED RANGE SET ABOVE THE HIGH WATER LEVEL (HWL).
2. STILLING WELL SHALL BE MINIMUM 2 FEET FROM BOTTOM OF TANK AND SHALL BE LOCATED ABOVE SST SENSOR.
3. TERMINATION BOX ENCLOSURE SHALL BE LOCATED OUTSIDE OF TANK, WALL OR STANCHION MOUNTED.
4. INCLUDE 1/2-INCH HOLE BELOW LOW WATER LEVEL (LWL) FOR DRAIN.

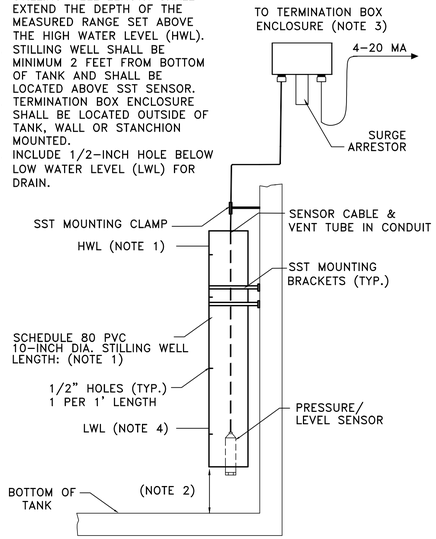

TANK DEPTH/LEVEL SENSOR DETAIL

NOTES:
1. FLANGED 6-INCH LONG (MAX.) PVC STANDPIPE EXTENDING ABOVE CONCRETE SLAB.
2. MANUFACTURER'S RECOMMENDED DISTANCE BETWEEN TANK SIDE WALL AND SENSOR.
3. MOUNT SENSOR AWAY FROM CLEARWELL WALL AND OTHER OBSTRUCTIONS.

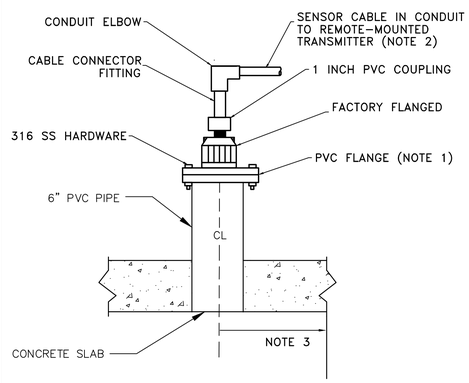

CLEARWELL ULTRASONIC SENSOR MOUNTING DETAIL

REV.NO.	DESCRIPTIONS	DATE

REVISIONS

SEAL

MICHAEL TWEEDEL LICENSE No 60940 STATE OF FLORIDA PROFESSIONAL ENGINEER

SEAL

McKIM&CREED
1365 Hamlet Avenue
Clearwater, Florida 33756
Phone: (727)442-7196, Fax: (727)461-3827
CA Lic. No. 29588
www.mckimcreed.com

Manatee County FLORIDA

MANATEE COUNTY
WTP BIOLOGICAL TREATMENT UNIT

INSTRUMENTATION INSTALLATION DETAILS

DATE:	OCTOBER 2015
MCE PROJ. #	1024-0167
DRAWN	RRO
DESIGNED	MDT
CHECKED	JSL
PROJ. MGR.	PJL

SCALE
HORIZONTAL: NA
VERTICAL: NA

DRAWING NUMBER
I-0.4

STATUS: ISSUE FOR BID
REVISION

C:\Users\vasquezrb\Manatee WTP (Biological Filters)\01024-0167-0_4.dwg, 9/30/2015 11:26:45 AM, Rebecca Vasquezrb

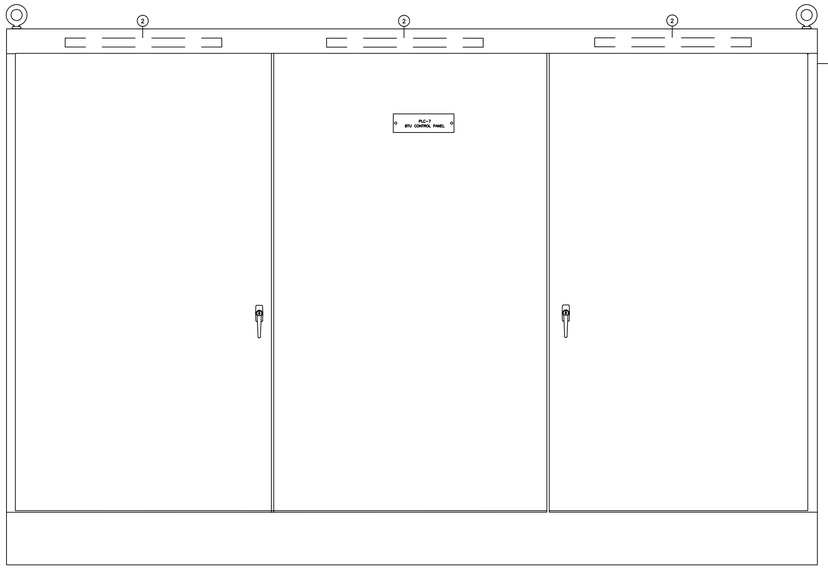

ENCLOSURE FRONT

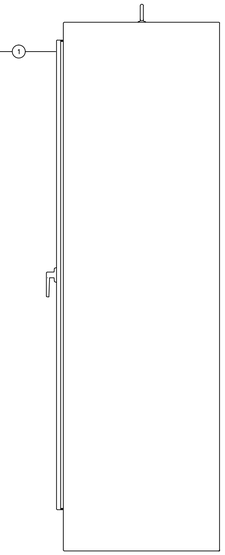

ENCLOSURE SIDE

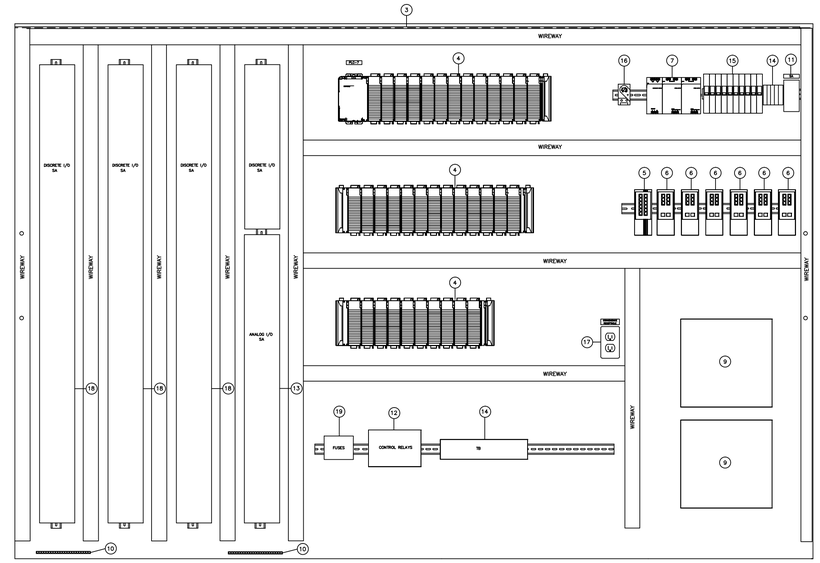

SUBPANEL LAYOUT

NOTES:

1. ENCLOSURE, NEMA 12, 86"H x 112"W X 20"D, APPROXIMATE DIMENSIONS
2. LED SERVICE LIGHTS, 15-INCH
3. ENCLOSURE SUBPANEL, STEEL, PAINTED WHITE
4. PLC HARDWARE
5. MANAGED ETHERNET NETWORK FIBER SWITCH (SCADA)
6. UNMANAGED ETHERNET NETWORK FIBER SWITCH (RIO & OIT)
7. POWER SUPPLY, REDUNDANT, 24VDC @ 5A OUT
8. CONTROL RELAYS,120VDC COIL, DPDT
9. FIBER OPTIC TERMINATION PATCH PANELS
10. GROUND CONNECTOR
11. AC LINE SURGE SUPPRESSOR
12. CONTROL RELAYS, 120VAC, COIL, DPDT
13. ANALOG SURGE SUPPRESSORS
14. TERMINALS
15. CIRCUIT BREAKERS
16. TEMPERATURE SWITCH
17. GFCI RECEPTACLE
18. DISCRETE SURGE SUPPRESSORS
19. FUSES WITH INDICATORS

BIOLOGICAL TREATMENT UNIT CONTROL PANEL (PLC-7)

NOT TO SCALE

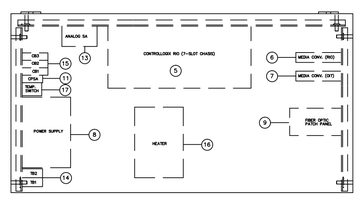

TOP VIEW PANEL (INTERIOR)

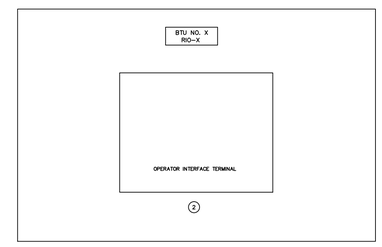

TOP VIEW PANEL (EXTERIOR)

RIO NAMEPLATE:

TYPICAL OF SIX BIOLOGICAL TREATMENT UNITS,
WHERE X=UNIT NO. (X=1 THROUGH 6):

BTU NO. 1; RIO-1
BTU NO. 2; RIO-2
BTU NO. 3; RIO-3
BTU NO. 4; RIO-4
BTU NO. 5; RIO-5
BTU NO. 6; RIO-6

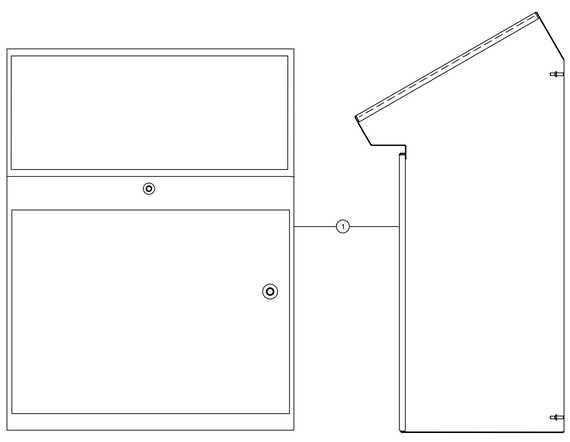

CONSOLE FRONT VIEW

CONSOLE SIDE VIEW

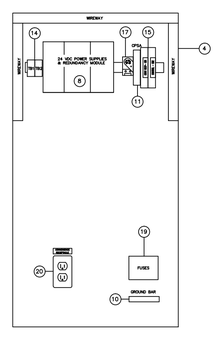

SUBPANEL (LEFT SIDE)

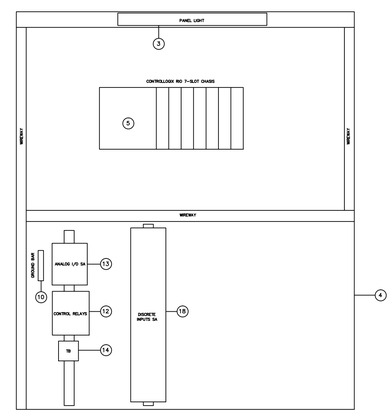

BACK SUBPANEL

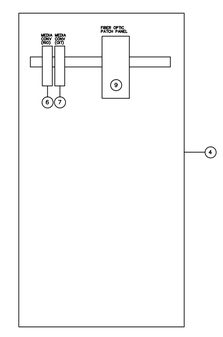

SUBPANEL (RIGHT SIDE)

NOTES:

1. CONSOLE ENCLOSURE, NEMA 4X, 316 SST, 48"H x 36"W X 18"D, APPROXIMATE DIMENSIONS
2. OPERATOR INTERFACE TERMINAL (OIT), 15-INCH, NEMA 4X
3. LED SERVICE LIGHT, 15-INCH
4. ENCLOSURE SUBPANEL, STEEL, PAINTED WHITE
5. PLC HARDWARE
6. ETHERNET SWITCH, UNMANAGED (RIO)
7. ETHERNET SWITCH, UNMANAGED (OIT)
8. POWER SUPPLIES, REDUNDANT, 24VDC @ 5A
9. FIBER OPTIC TERMINATION PATCH PANEL
10. GROUND CONNECTOR
11. AC LINE SURGE SUPPRESSOR
12. CONTROL RELAYS, 120VAC, COIL, 1PDT
13. ANALOG SURGE SUPPRESSORS
14. TERMINALS
15. CIRCUIT BREAKERS
16. HEATER
17. TEMPERATURE SWITCH
18. DIGITAL SURGE SUPPRESSORS
19. FUSES WITH INDICATORS
20. GFCI RECEPTACLE

BTU REMOTE I/O CONSOLE (RIO-X)

NOT TO SCALE

REV.NO.	DESCRIPTIONS	DATE

REVISIONS

SEAL

MICHAEL TWEEDY LICENSE No 60940 STATE OF FLORIDA PROFESSIONAL ENGINEER

SEAL

McKIM&CREED
1365 Hamlet Avenue
Clearwater, Florida 33756
Phone: (727)442-7196, Fax: (727)461-3827
CA Lic. No. 29588
www.mckimcreed.com

Manatee County FLORIDA

MANATEE COUNTY
WTP BIOLOGICAL TREATMENT UNIT

PANEL DETAILS
PLC CONTROL PANEL
AND REMOTE I/O CONSOLE

DATE:	OCTOBER 2015
MCE PROJ. #	1024-0167
DRAWN	RRO
DESIGNED	MDT
CHECKED	JSL
PROJ. MGR.	PJL

SCALE
HORIZONTAL: NA
VERTICAL: NA

DRAWING NUMBER
I-0.5

STATUS: ISSUE FOR BID
REVISION

C:\Users\rrosquest\Manatee WTP (Biological Filters)\01024-0167-0_5.dwg, 9/30/2015 11:36:45 AM, Rebecca Dasquale

EXISTING CONTROL ROOM CABINET
NOT TO SCALE

NOTES:

1. PROVIDE AND INSTALL A NEW FIBER OPTIC PATCH PANEL INSIDE THE EXISTING CONTROL ROOM CABINET. REFER TO SPECIFICATION SECTION 13330 FOR FIBER OPTIC PATCH PANEL REQUIREMENTS.
2. PROVIDE A MINIMUM OF 1-INCH CLEARANCE AROUND OUTSIDE OF PATCH PANEL. ALSO, PROVIDE SUFFICIENT AMOUNT OF CLEARANCE TO OPEN PATCH PANEL DOOR AND ACCESS FIBER OPTIC CABLE INSIDE.
3. INSTALL AND TERMINATE NEW 12-STRAND FIBER OPTIC CABLE AND RELOCATE EXISTING FIBER OPTIC CABLE, WHICH IS ALREADY TERMINATED, INSIDE THE NEW PATCH PANEL. EXISTING AND NEW FIBER OPTIC CABLES SHALL BE TESTED AFTER INSTALLATION IN THE NEW PATCH PANEL.

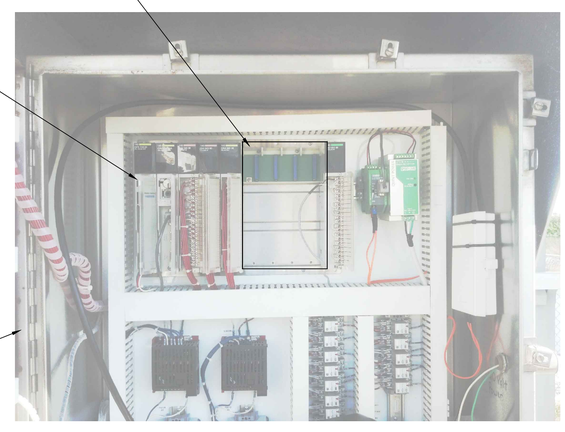

EXISTING BACKWASH POND RTU (BWDM-1 RTU, INTERIOR)
NOT TO SCALE

NOTES:

1. REFER TO ELECTRICAL DRAWINGS FOR RTU PANEL LOCATION.
2. EXISTING MODICON QUANTUM PLC.
3. PROVIDE ADDITIONAL I/O MODULES AS REQUIRED TO ACCOMMODATE THE NEW i/O PROVIDED UNDER THIS CONTRACT AND AS SPECIFIED AND SHOWN ON THE DRAWINGS.
4. THE EXISTING MODICON QUANTUM PLC CONSIST OF THE FOLLOWING:

QTY	DESCRIPTION	PART/MODEL NO.
1	10-SLOT RACK	140XBP01000
1	POWER SUPPLY	140CPU11100
1	PROCESSOR	140CPU11303
1	REMOTE I/O MODULE	140CRP93100
1	8 POINT AI MODULE	140AC103000
1	16 POINT DI (120VAC) MODULE	140DA154300
1	16 POINT DO RELAY MODULE	140DRA84000

REV.NO.	DESCRIPTIONS	DATE

REVISIONS

SEAL

MICHAEL TWEDELL LICENSED PROFESSIONAL ENGINEER No 60940 STATE OF FLORIDA

SEAL

McKIM&CREED
1365 Hamlet Avenue
Clearwater, Florida 33756
Phone: (727)442-7196, Fax: (727)461-3827
CA Lic. No. 29588
www.mckimcreed.com

Manatee County FLORIDA

MANATEE COUNTY
WTP BIOLOGICAL TREATMENT UNIT

PANEL DETAILS
EXISTING PLC PANEL
& CABINET MODIFICATIONS

DATE:	OCTOBER 2015
MCE PROJ. #	1024-0167
DRAWN	RRO
DESIGNED	MDT
CHECKED	JSL
PROJ. MGR.	PJL

SCALE
HORIZONTAL: NA
VERTICAL: NA

DRAWING NUMBER
I-0.6

STATUS: ISSUE FOR BID
REVISION

C:\Users\rosequeda\Manatee WTP (Biological Filters)\0\024-0167-0_6.dwg, 9/30/2015 11:31:54 AM, Rebecca Oseguede

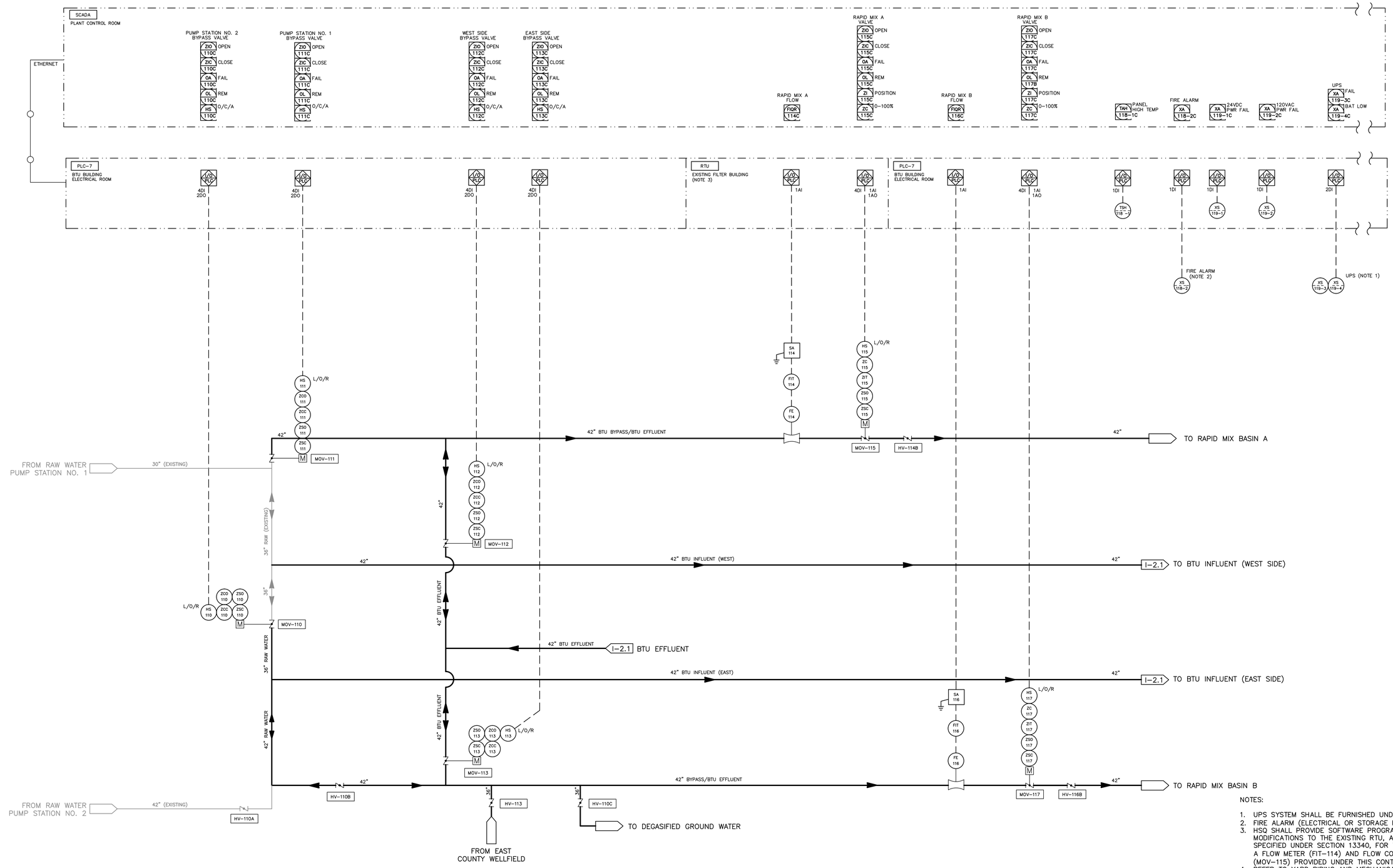

NOTES:

1. UPS SYSTEM SHALL BE FURNISHED UNDER DIVISION 16.
2. FIRE ALARM (ELECTRICAL OR STORAGE ROOM).
3. HSQ SHALL PROVIDE SOFTWARE PROGRAMMING MODIFICATIONS TO THE EXISTING RTU, AS SHOWN AND SPECIFIED UNDER SECTION 13340, FOR THE RAPID MIX A FLOW METER (FIT-114) AND FLOW CONTROL VALVE (MOV-115) PROVIDED UNDER THIS CONTRACT.
4. REFER TO YARD PIPING AND MECHANICAL DRAWINGS FOR DETAILED INFORMATION ON PIPE ROUTING & INTERCONNECTIONS.

REV.NO.	DESCRIPTIONS	DATE

REVISIONS

SEAL

MICHAEL TWEEDEL LICENSE No 60940 STATE OF FLORIDA PROFESSIONAL ENGINEER

SEAL

McKIM&CREED
1365 Hamlet Avenue
Clearwater, Florida 33756
Phone: (727)442-7196, Fax: (727)461-3827
CA Lic. No. 29588
www.mckimcreed.com

Manatee County FLORIDA

MANATEE COUNTY WTP BIOLOGICAL TREATMENT UNIT

PROCESS AND INSTRUMENTATION DIAGRAM RAW WATER INFLUENT, BYPASS, AND RAPID MIX BASINS

DATE:	OCTOBER 2015
MCE PROJ. #	1024-0167
DRAWN	RRO
DESIGNED	MDT
CHECKED	JSL
PROJ. MGR.	PJL

SCALE
HORIZONTAL: NA
VERTICAL: NA

DRAWING NUMBER
I-1.1

STATUS: ISSUE FOR BID
REVISION

C:\Users\rrosepedo\Manatee WTP (Biological Flows)\01024-0167-I_I.dwg, 9/30/2015 11:33:02 AM, Rebecca Desguado

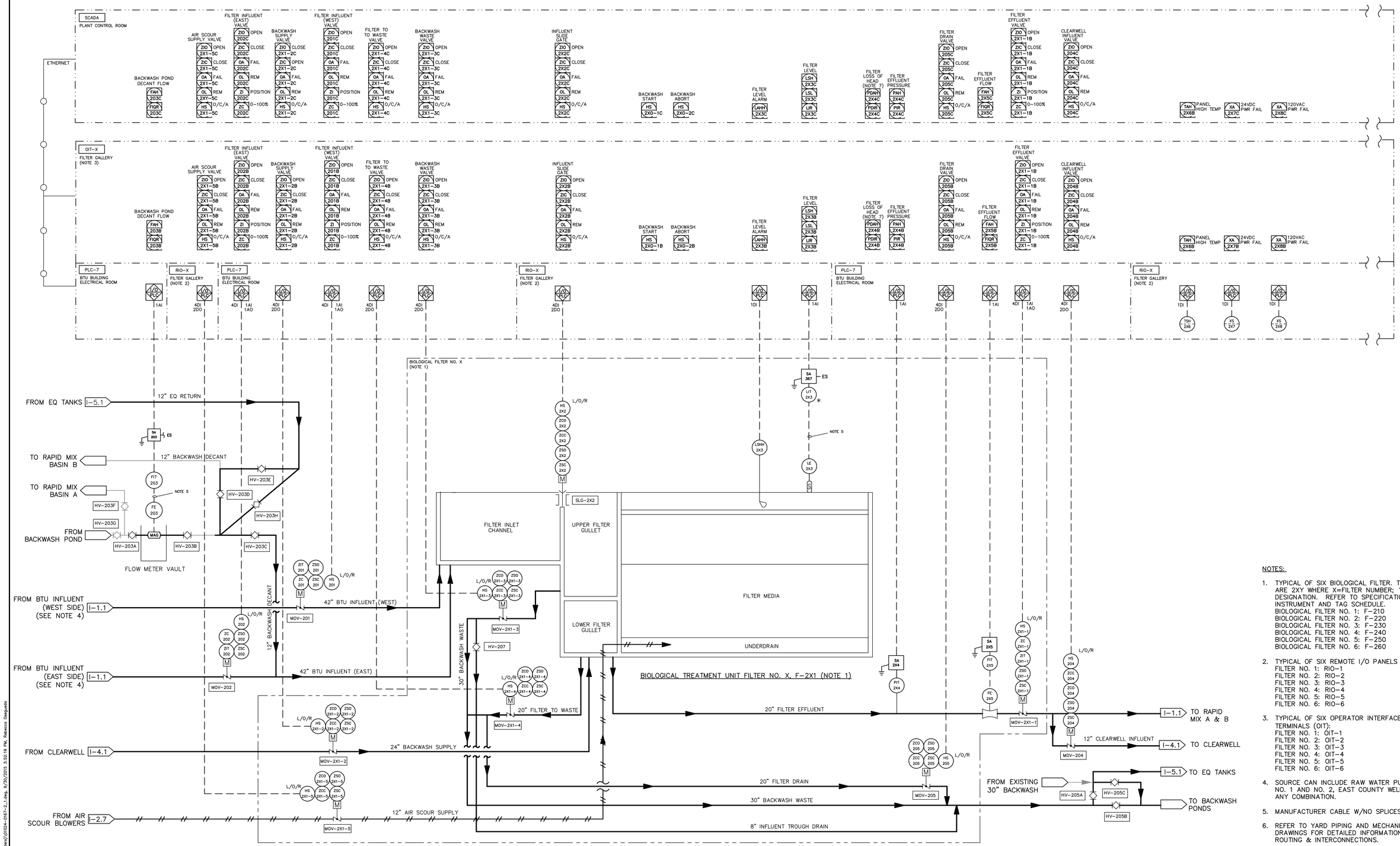

NOTES:

1. TYPICAL OF SIX BIOLOGICAL FILTER. TAG NUMBERS ARE 2XY WHERE X=FILTER NUMBER; Y= VALVE DESIGNATION. REFER TO SPECIFICATIONS FOR INSTRUMENT AND TAG SCHEDULE.
   BIOLOGICAL FILTER NO. 1: F-210
   BIOLOGICAL FILTER NO. 2: F-220
   BIOLOGICAL FILTER NO. 3: F-230
   BIOLOGICAL FILTER NO. 4: F-240
   BIOLOGICAL FILTER NO. 5: F-250
   BIOLOGICAL FILTER NO. 6: F-260
2. TYPICAL OF SIX REMOTE I/O PANELS (RIO):
   FILTER NO. 1: RIO-1
   FILTER NO. 2: RIO-2
   FILTER NO. 3: RIO-3
   FILTER NO. 4: RIO-4
   FILTER NO. 5: RIO-5
   FILTER NO. 6: RIO-6
3. TYPICAL OF SIX OPERATOR INTERFACE TERMINALS (OIT):
   FILTER NO. 1: OIT-1
   FILTER NO. 2: OIT-2
   FILTER NO. 3: OIT-3
   FILTER NO. 4: OIT-4
   FILTER NO. 5: OIT-5
   FILTER NO. 6: OIT-6
4. SOURCE CAN INCLUDE RAW WATER PUMP STATION NO. 1 AND NO. 2, EAST COUNTY WELLFIELD, OR ANY COMBINATION.
5. MANUFACTURER CABLE W/NO SPLICES.
6. REFER TO YARD PIPING AND MECHANICAL DRAWINGS FOR DETAILED INFORMATION ON PIPE ROUTING & INTERCONNECTIONS.

REV.NO.	DESCRIPTIONS	DATE
	REVISIONS	

SEAL

MICHAEL TWEEDEL LICENSE No 60940 STATE OF FLORIDA PROFESSIONAL ENGINEER

SEAL

McKIM&CREED
1365 Hamlet Avenue
Clearwater, Florida 33756
Phone: (727)442-7196, Fax: (727)461-3827
CA Lic. No. 29588
www.mckimcreed.com

Manatee County FLORIDA

MANATEE COUNTY WTP BIOLOGICAL TREATMENT UNIT

PROCESS AND INSTRUMENTATION DIAGRAM BIOLOGICAL TREATMENT UNIT

DATE:	OCTOBER 2015
MCE PROJ. #	1024-0167
DRAWN	RRO
DESIGNED	MDT
CHECKED	JSL
PROJ. MGR.	PJL

SCALE
HORIZONTAL: NA
VERTICAL: NA

DRAWING NUMBER
I-2.1

STATUS: ISSUE FOR BID
REVISION

C:\Users\rrosgrove\Manatee WTP (Biological Filters)\01024-0167-2_1.dwg, 9/30/2015 3:52:19 PM, Rebecca Rosgrove

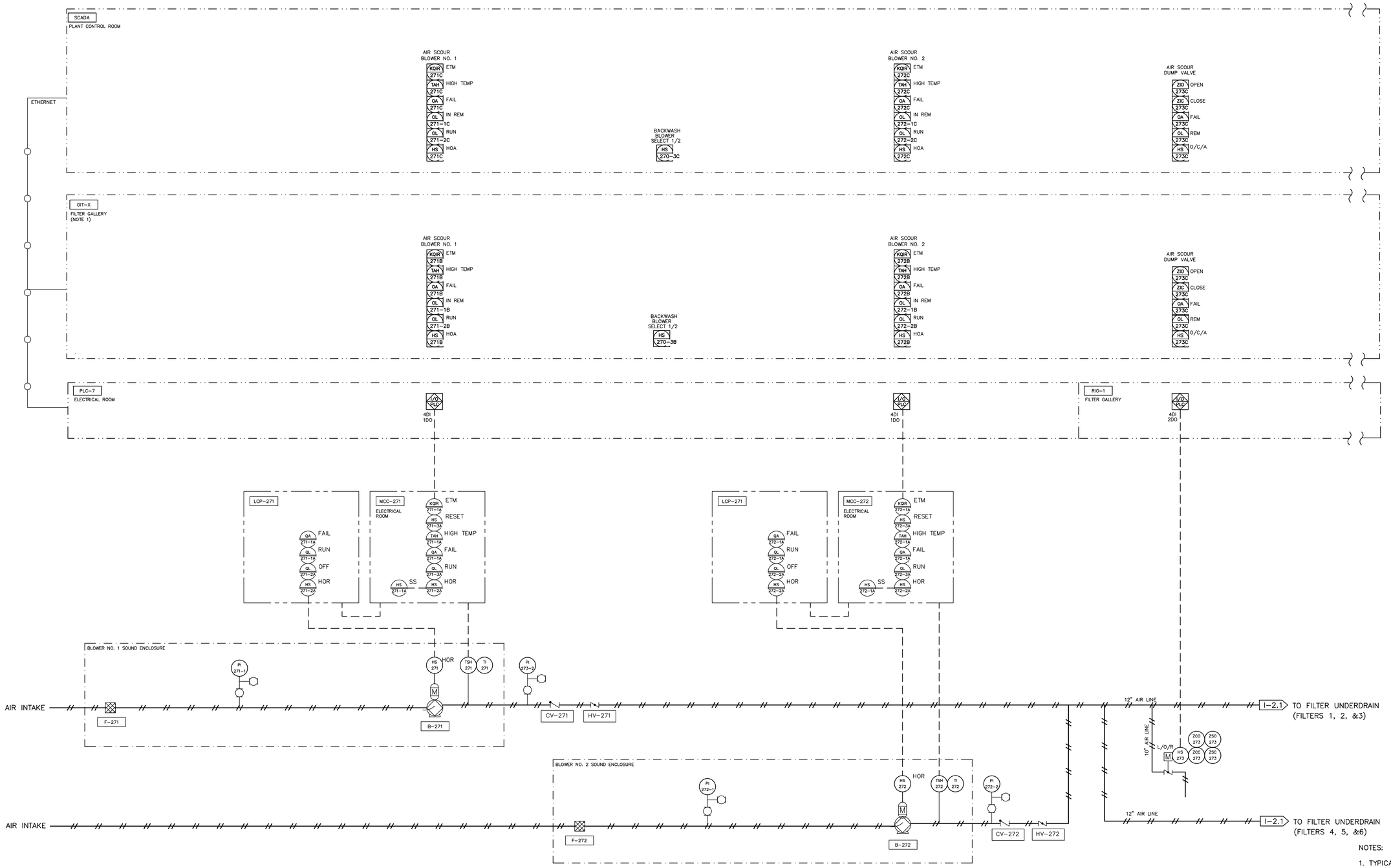

NOTES:

1. TYPICAL OF SIX OPERATOR INTERFACE TERMINALS (OIT):
   FILTER RIO PANEL NO. 1: OIT-1
   FILTER RIO PANEL NO. 2: OIT-2
   FILTER RIO PANEL NO. 3: OIT-3
   FILTER RIO PANEL NO. 4: OIT-4
   FILTER RIO PANEL NO. 5: OIT-5
   FILTER RIO PANEL NO. 6: OIT-6
2. REFER TO MECHANICAL DRAWINGS FOR DETAILED INFORMATION ON PIPE ROUTING & INTERCONNECTIONS.

REV.NO.	DESCRIPTIONS	DATE

REVISIONS

SEAL

MICHAEL TWEEDLE LICENSED PROFESSIONAL ENGINEER No 60940 STATE OF FLORIDA

SEAL

McKIM&CREED
1365 Hamlet Avenue
Clearwater, Florida 33756
Phone: (727)442-7196, Fax: (727)461-3827
CA Lic. No. 29588
www.mckimcreed.com

Manatee County FLORIDA

MANATEE COUNTY
WTP BIOLOGICAL TREATMENT UNIT

PROCESS AND INSTRUMENTATION DIAGRAM
FILTER AIR SCOUR BLOWERS

DATE:	OCTOBER 2015
MCE PROJ. #	1024-0167
DRAWN	RRO
DESIGNED	MDT
CHECKED	JSL
PROJ. MGR.	PJL

SCALE
HORIZONTAL: NA
VERTICAL: NA

DRAWING NUMBER
I-2.7

STATUS: ISSUE FOR BID
REVISION

C:\Users\rosequeda\Manatee WTP (Biological Filters)\01024-0167-2_2.dwg, 9/30/2015 11:36:12 AM, Rebecca Desguada

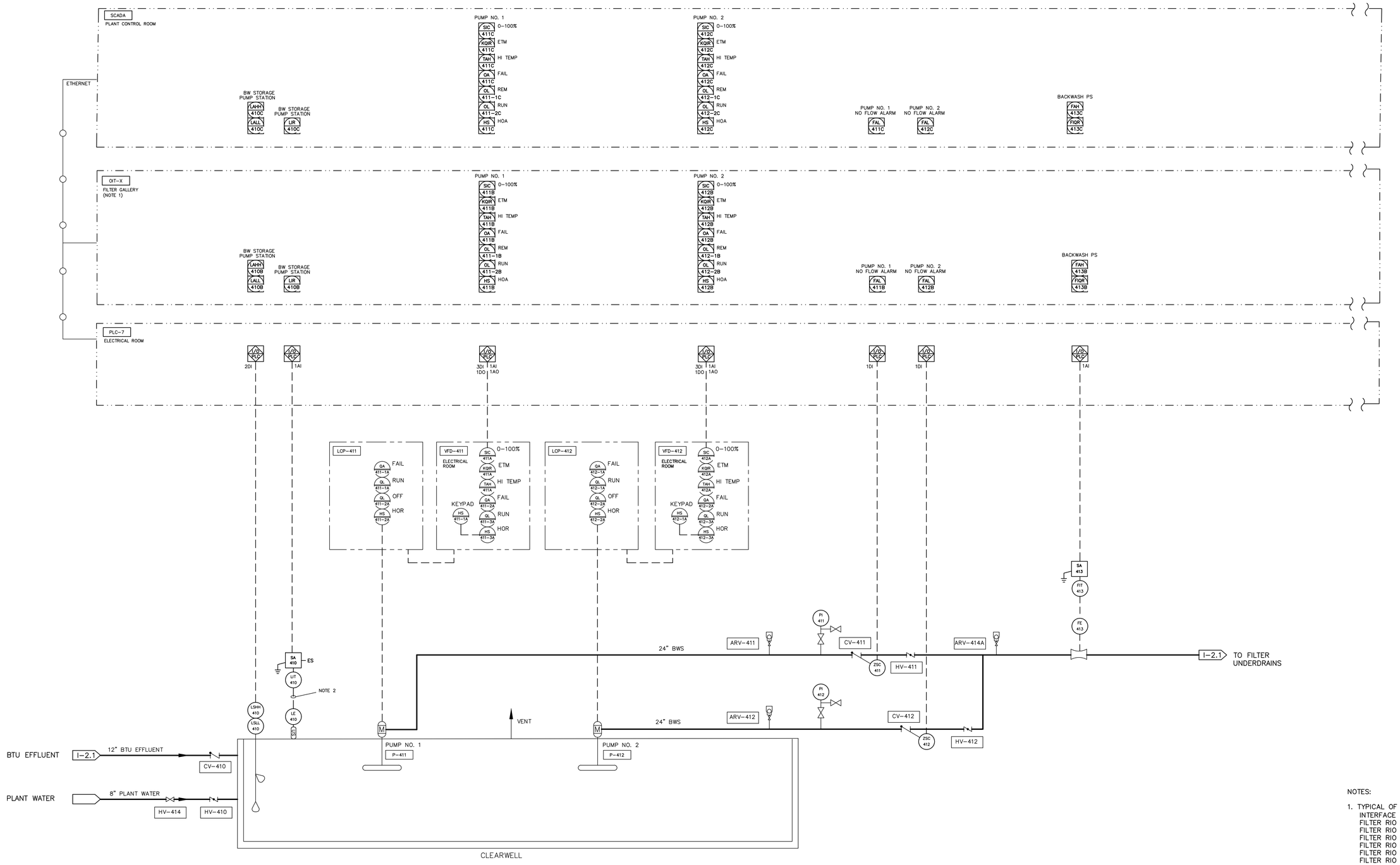

NOTES:

1. TYPICAL OF SIX OPERATOR INTERFACE TERMINALS (OIT):
   FILTER RIO PANEL NO. 1: OIT-1
   FILTER RIO PANEL NO. 2: OIT-2
   FILTER RIO PANEL NO. 3: OIT-3
   FILTER RIO PANEL NO. 4: OIT-4
   FILTER RIO PANEL NO. 5: OIT-5
   FILTER RIO PANEL NO. 6: OIT-6
2. MANUFACTURER CABLE W/NO SPLICES.
3. REFER TO MECHANICAL DRAWINGS FOR DETAILED INFORMATION ON PIPE ROUTING & INTERCONNECTIONS.

REV.NO.	DESCRIPTIONS	DATE

REVISIONS

SEAL: MICHAEL TWEEDEL, LICENSE No 60940, STATE OF FLORIDA, PROFESSIONAL ENGINEER

SEAL

McKIM&CREED
1365 Hamlet Avenue
Clearwater, Florida 33756
Phone: (727)442-7196, Fax: (727)461-3827
CA Lic. No. 29588
www.mckimcreed.com

Manatee County FLORIDA

MANATEE COUNTY
WTP BIOLOGICAL TREATMENT UNIT

PROCESS AND INSTRUMENTATION DIAGRAM
CLEARWELL AND BACKWASH PUMPING

DATE:	OCTOBER 2015
MCE PROJ. #	1024-0167
DRAWN	RRO
DESIGNED	MDT
CHECKED	JSL
PROJ. MGR.	PJL

SCALE
HORIZONTAL: NA
VERTICAL: NA

DRAWING NUMBER: I-4.1

STATUS: ISSUE FOR BID

REVISION

C:\Users\rrosquest\Manatee WTP (Biological Filters)\01024-0167-4_1.dwg, 9/30/2015 11:37:56 AM, Rebecca Desquesta

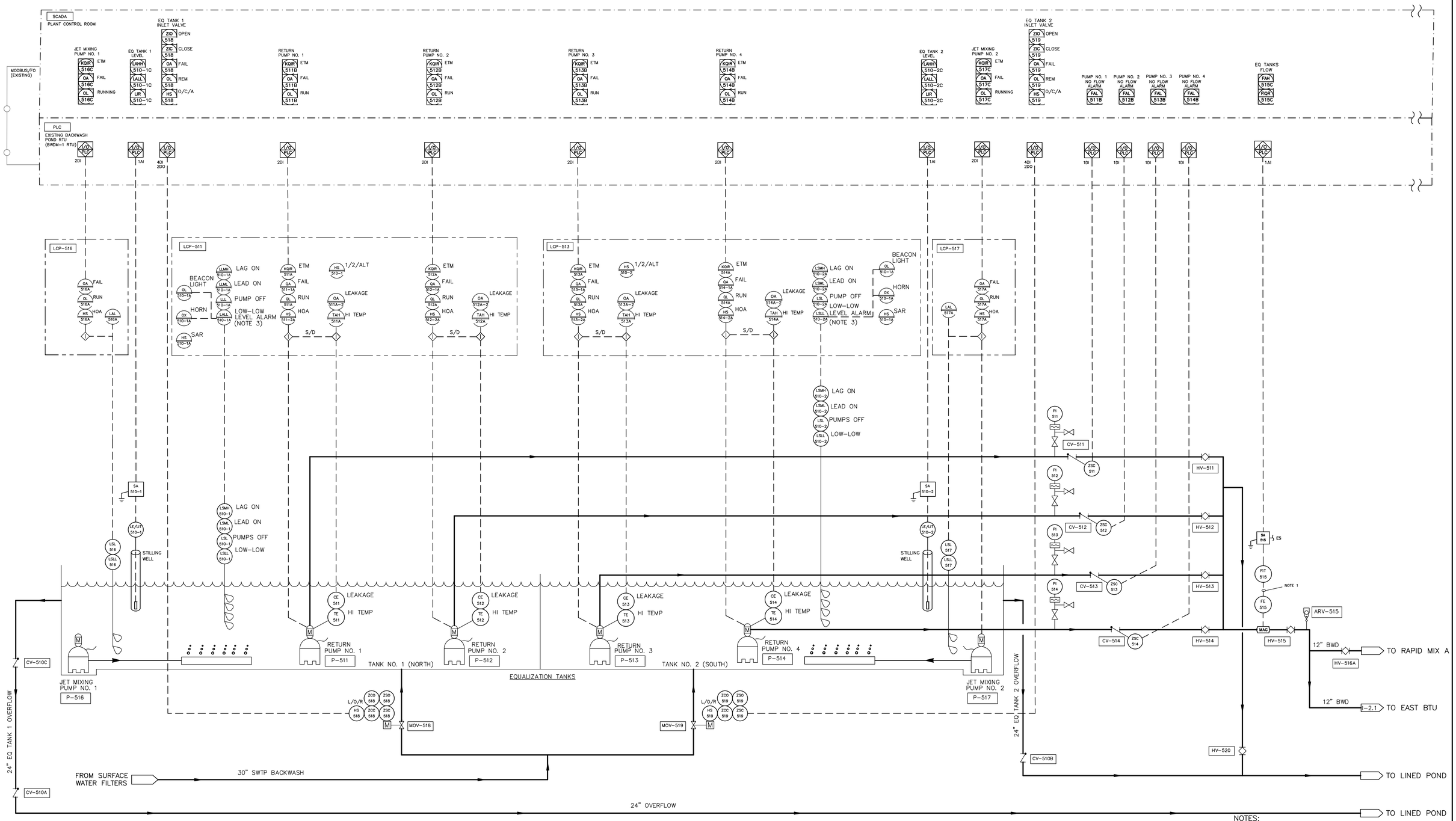

NOTES:
1. MANUFACTURER CABLE W/NO SPLICES.
2. REFER TO YARD PIPING AND MECHANICAL DRAWINGS FOR DETAILED INFORMATION ON PIPE ROUTING & INTERCONNECTIONS.
3. ACTIVATE BEACON LIGHT & HORN ON PUMP STATION LOW-LOW LEVEL.

REV.NO.	DESCRIPTIONS	DATE

REVISIONS

SEAL

MICHAEL TWEEDEL LICENSE No 60940 STATE OF FLORIDA PROFESSIONAL ENGINEER

SEAL

McKIM&CREED
1365 Hamlet Avenue
Clearwater, Florida 33756
Phone: (727)442-7196, Fax: (727)461-3827
CA Lic. No. 29588
www.mckimcreed.com

Manatee County FLORIDA

MANATEE COUNTY
WTP BIOLOGICAL TREATMENT UNIT

PROCESS AND INSTRUMENTATION DIAGRAM EQUALIZATION TANK & PUMP STATIONS

DATE:	OCTOBER 2015
MCE PROJ. #	1024-0167
DRAWN	RRO
DESIGNED	MDT
CHECKED	JSL
PROJ. MGR.	PJL

SCALE
HORIZONTAL: NA
VERTICAL: NA

DRAWING NUMBER
I-5.1

STATUS: ISSUE FOR BID
REVISION

C:\Users\rosepaul\Manatee WTP (Biological Filters)\01024-0167-5_I.dwg, 9/30/2015 4:29:36 PM, Rebecca Gasparato

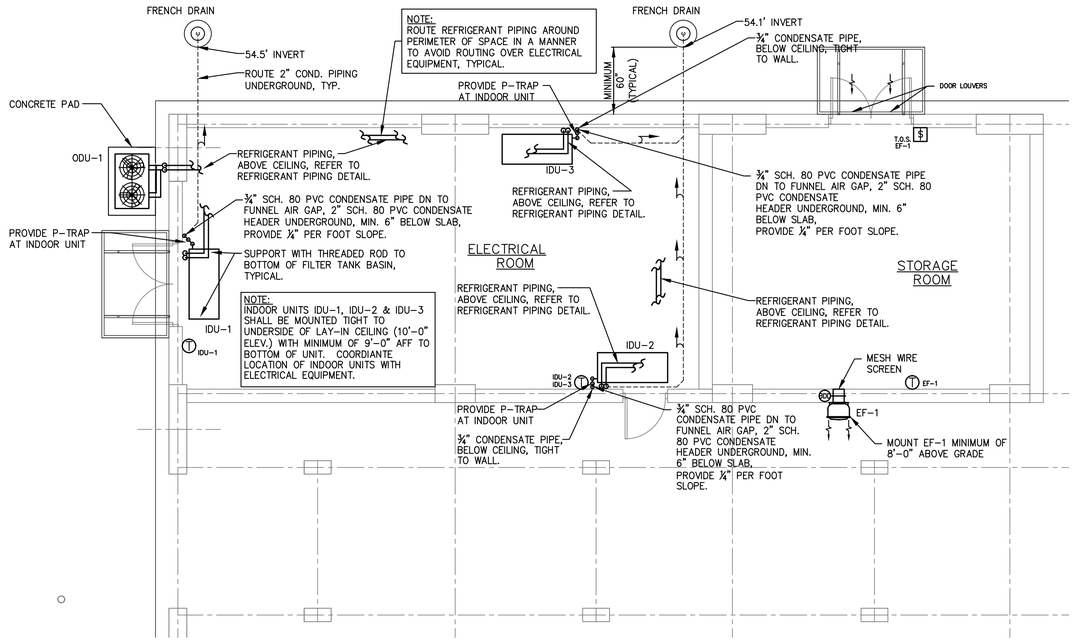

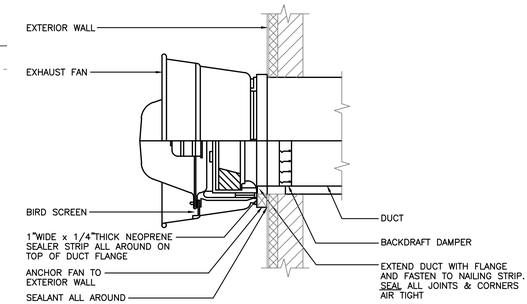

SIDEWALL EXHAUST FAN DETAIL
NO SCALE

GENERAL NOTES

1. THIS CONTRACTOR SHALL COORDINATE HIS WORK WITH THAT OF THE OTHER TRADES PRIOR TO INSTALLATION OF ANY OF HIS PIPING OR EQUIPMENT.
2. THE HVAC CONTRACTOR SHALL MAKE A COMPLETE REVIEW OF THE HVAC PLANS, SCHEDULES, AND DETAILS PRIOR TO INSTALLATION OF THE HVAC SYSTEMS AND REVIEW ANY CONFLICTS THAT ARE NOTED WITH THE ENGINEER.
3. IT WILL BE THE RESPONSIBILITY OF THE HVAC CONTRACTOR TO ENSURE THAT ITEMS TO BE FURNISHED UNDER HIS CONTRACT WILL FIT THE SPACE AVAILABLE. HE SHALL MAKE NECESSARY FIELD MEASUREMENTS TO ASCERTAIN SPACE REQUIREMENTS, INCLUDING THOSE FOR CONNECTIONS, AND SHALL FURNISH AND INSTALL SUCH SIZES AND SHAPES OF EQUIPMENT THAT ARE THE TRUE INTENT AND MEANING OF THE PLANS AND SPECIFICATIONS.
4. ALL EQUIPMENT SHALL BE LOCATED AND INSTALLED TO PROVIDE MAXIMUM SPACE FOR MAINTENANCE AND SERVICE.
5. THE HVAC CONTRACTOR SHALL BE RESPONSIBLE FOR ALL POWER AND CONTROL WIRING AND CONNECTIONS TO THE EQUIPMENT PROVIDED UNDER THIS CONTRACT.
6. THE HVAC CONTRACTOR SHALL PROVIDE AND INSTALL HIS OWN SUPPORT DEVICES. ALL LOCATIONS SHALL BE COORDINATED WITH THE GENERAL CONTRACTOR AND OTHER PRIME CONTRACTORS PRIOR TO INSTALLATION.
7. THE HVAC CONTRACTOR SHALL REFER TO THE STRUCTURAL AND ELECTRICAL PLANS FOR FLOOR PLAN DIMENSIONS. DO NOT SCALE THESE DRAWINGS.
8. THE HVAC CONTRACTOR SHALL BE RESPONSIBLE FOR ALL PENETRATIONS (PERTAINING TO HIS WORK) THROUGH THE ROOF, WALLS, FLOORS AND THE WATERPROOFING AROUND THE OPENINGS. PENETRATIONS THROUGH FIRE RATED ASSEMBLY SHALL BE PROTECTED AS REQUIRED BY SPECIFICATIONS AND CODE (SLEEVES, FIRE CAULK, ETC.).
9. THE HVAC CONTRACTOR SHALL BE RESPONSIBLE FOR ALL CUTTING AND PATCHING OF FLOORS AND WALLS PERTAINING TO HIS WORK.
10. CONDENSATE DRAINS SHALL BE A MINIMUM OF ¾"ø SCH. 80 PVC PIPE. REFRIGERANT PIPING SHALL BE SIZED AND INSULATED PER MANUFACTURER'S RECOMMENDATIONS. A P-TRAP SHALL BE INSTALLED IN CONDENSATE PIPE AT THE UNIT. ALL CONDENSATE LINES SHALL BE ROUTED TO A FUNNEL AIR GAP DRAIN AS SHOWN ON PLANS.
11. LOCATE ROOM TEMPERATURE SENSORS 48" ABOVE FINISHED FLOOR OR AS NOTED ON THE PLANS.
12. ALL SENSORS, WIRING, AND CONDUIT ARE TO BE FURNISHED AND INSTALLED BY THE HVAC CONTRACTOR.
13. ALL PIPING AND EQUIPMENT, ETC. SHALL BE SUPPORTED FROM THE CEILING STRUCTURE.
14. ALL EQUIPMENT SHALL MEET OR EXCEED ALL REQUIREMENTS AS DESCRIBED IN THE LATEST VERSION OF ASHRAE STANDARD 90.1.
15. THE HVAC CONTRACTOR SHALL COORDINATE THE ROUGH-IN OF PIPING WITH THE GENERAL CONTRACTOR AND OTHER PRIME CONTRACTORS.
16. ALL REFRIGERANT PIPING SHALL HAVE IDENTIFICATION LABELS EVERY 10 FEET.
17. HVAC CONTRACTOR TO PROVIDE 4" THICK SUPPORT PADS FOR BASE MOUNTED EQUIPMENT. SIZE PAD TO PROVIDE 4" MINIMUM FROM EQUIPMENT TO END OF PAD ON ALL SIDES.
18. THE CONTRACT DRAWINGS ARE DIAGRAMMATIC AND ARE INDICATIVE OF THE WORK TO BE PERFORMED. IT IS NOT INTENDED THAT THEY SHOW EVERY PIPE FITTING OR APPARATUS REQUIRED FOR A COMPLETE INSTALLATION. THEY ARE NOT INTENDED TO INDICATE EVERY BEND, OFFSET, CHANGE IN DIRECTION AND APPURTENANCE REQUIRED TO PROVIDE A COMPLETE AND WORKABLE SYSTEM. ALL MATERIALS AND EQUIPMENT USED SHALL BE INSTALLED IN STRICT ACCORDANCE WITH THE STANDARDS UNDER WHICH THE MATERIALS ARE ACCEPTED AND APPROVED, AND IN STRICT ACCORDANCE WITH THE MANUFACTURER'S INSTRUCTIONS.

NORTH

HVAC PLAN
3/16"=1'-0"

0 4 12
SCALE: 3/16" = 1'-0"

DUCTLESS SPLIT VARIABLE REFRIGERANT FLOW SYSTEM HEAT PUMP SCHEDULE

TAG	LOCATION	INDOOR FCU DATA: TOTAL CAP.	CFM	COOLING SENS. TOTAL	HEATING CAP.	VOLTS/ø	MCA	MANUFACTURER/ MODEL #	OUTDOOR CONDENSING UNIT DATA: TAG	COOLING CAP. TOTAL	HEATING CAP.	IEER	VOLTS/ø	MCA	MOCP	MANUFACTURER/ MODEL #	NOTES
IDU-1	ELECTRICAL ROOM	30,931	830	24,025	39,999	208-230/1	1.4	DAIKIN / FXHQ36MVJU	ODU-1	91,869	71,094	23.0	460/3	21	25	DAIKIN / RXYQ96PBYD	1 THRU 10
IDU-2	ELECTRICAL ROOM	30,931	830	24,025	39,999	208-230/1	1.4	DAIKIN / FXHQ36MVJU									
IDU-3	ELECTRICAL ROOM	30,931	830	24,025	39,999	208-230/1	1.4	DAIKIN / FXHQ36MVJU									

1. PROVIDE LOW AMBIENT CONTROL TO ALLOW UNIT COOLING DOWN TO 23° F.
2. REFRIGERANT PIPING SHALL BE PROVIDED AS RECOMMENDED BY THE MANUFACTURER BASED ON THE LOCATION OF THE IDU's IN RELATION TO THE CONDENSING UNIT (ODU).
3. COOLING CAPACITY IS LISTED IN BTUH AND BASED ON 78°F DB/63°F WB E.A.T. AND 95°F AMBIENT. HEATING CAPACITY IS LISTED IN BTUH AND IS BASED ON 18°F OA DB TEMPERATURE AND 70°F INDOOR DB TEMPERATURE.
4. PROVIDE WITH REMOVABLE WASHABLE FILTERS.
5. DISCONNECT PROVIDED BY M.C..
6. PROVIDE UNIT WITH THREE YEAR PARTS AND SEVEN YEAR COMPRESSOR WARRANTY.
7. PROVIDE UNIT WITH R-410A REFRIGERANT.
8. INDOOR UNIT SHALL BE PROVIDED WITH ECM MOTOR.
9. PROVIDE WITH COATED FINS ON OUTDOOR UNIT AND HAIL GUARDS.
10. CONDENSING UNIT SHALL BE PROVIDED WITH MINIMUM OF TWO COMPRESSORS.

FAN SCHEDULE

MARK	TYPE	AREA SERVED	CFM	E.S.P. (" W.G.)	MAX. NOISE LEVEL (SONES)	FAN WHEEL	FAN TYPE	FAN RPM	MOTOR RPM	FAN BHP	ELECTRICAL: HP	VOLTS	ø	BASIS OF DESIGN/ MODEL	REMARKS (NOTES)
EF-1	SIDEWALL CENTRIFUGAL DIRECT DRIVE	STORAGE ROOM	500	0.25"	5.1	10⅞"	BACKWARD INCLINE	1152	1300	0.05	1/12	120	1	GREENHECK CW-095-G	1 THRU 13

NOTES:
1. ALL FANS MOTORS SHALL BE NON-OVERLOADING.
2. FURNISHED ALL FANS WITH UL LISTED STARTERS/DISCONNECT SWITCHES.
3. UNITS SHALL BEAR AMCA SEAL AND U.L. LABEL.
4. PROVIDE ALUMINUM BACKDRAFT DAMPER.
5. PROVIDE SOLID STATE SPEED CONTROL SWITCH.
6. PROVIDE NEMA PREMIUM EFFICIENCY MOTOR WITH RATING STAMPED ON NAMEPLATE.
7. MECHANICAL CONTRACTOR SHALL INSTALL FAN PER MANUFACTURER'S RECOMMENDATION FOR 150 MPH WINDS.
8. PROVIDE STANDARD FINISH, CLEAR ANODIZED SPUN ALUMINUM.
9. PROVIDE ALL ALUMINUM WHEEL, L10-100,000 HR BEARINGS, ALUMINUM BIRDSCREEN.
10. EXHAUST FAN SHALL CONFORM TO AMCA 210 PERFORMANCE RATING AND BEAR THE AMCA CERTIFIED RATING SEAL.
11. EXHAUST FAN SHALL CONFORM TO AMCA 301 SOUND RATING AND BE TESTED TO AMCA 300.
12. EXHAUST FAN SHALL CONFORM TO AMCA 99 FABRICATION.
13. BASIS OF DESIGN IS GREENHECK; EQUALS BY COOK AND TWIN CITY ARE ACCEPTABLE.
14. INSTALL IN ACCORDANCE WITH MANUFACTURER'S INSTRUCTIONS.

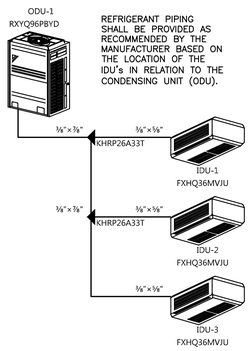

REFRIGERANT PIPING DETAIL
NO SCALE

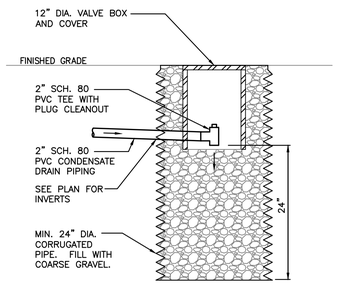

FRENCH DRAIN DETAIL
NO SCALE

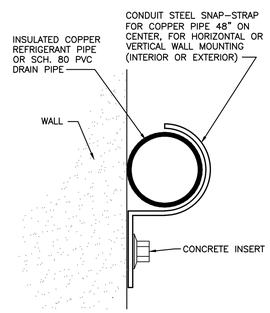

REFRIGERANT PIPING / CONDENSATE DRAIN DETAIL
NO SCALE

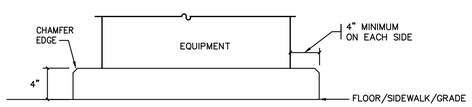

NOTES:
1. ACTUAL PAD SIZE TO BE DETERMINED BY CONTRACTOR AFTER EQUIPMENT SHOP DRAWING HAS BEEN APPROVED.

CONCRETE PAD DETAIL
NO SCALE

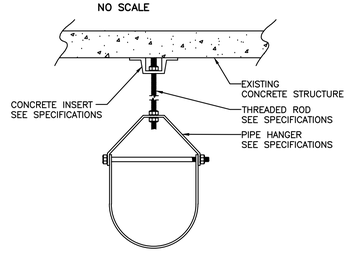

HANGER DETAIL
NO SCALE

REV.NO.	DESCRIPTIONS	DATE
	REVISIONS	

SEAL
MATTHEW E. DAVIES LICENSE No 76800 STATE OF FLORIDA PROFESSIONAL ENGINEER

SEAL

McKIM&CREED
1365 Hamlet Avenue
Clearwater, Florida 33756
Phone: (727)442-7196, Fax: (727)461-3827
CA Lic. No. 29588
www.mckimcreed.com

Manatee County FLORIDA

MANATEE COUNTY
WTP BIOLOGICAL TREATMENT UNIT

HVAC PLAN

DATE:	OCTOBER 2015
MCE PROJ. #	1024-0167
DRAWN	JMT
DESIGNED	AMN
CHECKED	JSL
PROJ. MGR.	PJL

SCALE
HORIZONTAL: AS SHOWN
VERTICAL: NA

DRAWING NUMBER
H-1.0

STATUS: ISSUE FOR BID
REVISION

\\pw-1\Projects\1024\0167\06-Drawings\HVAC\H-1.0.dwg, 9/29/2015 1:53:40 PM, Michael Turner

POWER DISTRIBUTION SYSTEM

52 / 1200 — MEDIUM VOLTAGE DRAWOUT POWER CIRCUIT BREAKER NUMBER INDICATES CURRENT RATING

DISCONNECT SWITCH WITH FUSING WHERE NOTED

100 / 30 — (FRAME SIZE) / (TRIP SIZE)
3 POLE THERMAL–MAGNETIC MOLDED CASE CIRCUIT BREAKER

100 / 30 2P — 2 POLE THERMAL–MAGNETIC CIRCUIT BREAKER

DWT EO — 800 / 800 (600P) — (FRAME SIZE) / (SENSOR RATING)
DENOTES PLUG RATING WHEN LESS THAN SENSOR RATING IS REQUIRED
DRAWOUT POWER CIRCUIT BREAKER WITH RMS TYPE SOLID STATE TRIP PROGRAMMER
EO DENOTES ELECTRICALLY OPERATED

7A / MCP — AC COMBINATION FULL VOLTAGE NON–REVERSING STARTER
(CONTINUOUS AMP RATING)
(MOTOR CIRCUIT PROTECTOR)
MAGNETIC BREAKER
MAGNETIC MOTOR STARTER
OVERLOAD RELAY

7A / MCP — F S — AC COMBINATION FULL VOLTAGE NON–REVERSING TWO SPEED TWO WINDING STARTER

RVSS–B — ELECTRONIC REDUCED VOLTAGE SOLID STATE STARTER –RVSS –B DENOTES WITH FULL SPEED BYPASS

600/5 3 — CURRENT TRANSFORMER, RATIO AND QUANTITY DENOTED

POTENTIAL TRANSFORMER

TRANSFORMER– SIZE AS NOTED ON THE THE DRAWINGS

SHIELDED ISOLATION TRANSFORMER

DELTA/WYE TRANSFORMER CONNECTION W/GROUND

LA — LIGHTNING ARRESTOR

CL 2 — FUSE– VOLTAGE AS REQUIRED AND SIZE NOTED ON THE DRAWINGS. CL DENOTES CURRENT LIMITING TYPE. NUMBER INDICATES QUANTITY WHEN LESS THAN 3.

A AS — AMMETER – AMMETER SWITCH

V VS — VOLTMETER – VOLTMETER SWITCH

LIGHTING, APPLIANCE OR INSTRUMENT PANELBOARD

POWER PANELBOARD

CP — CP – CONTROL PANEL

MCC — MOTOR CONTROL CENTER

VFD–B — VARIABLE FREQUENCY DRIVE – VFD –B WHEN INDICATED DENOTES WITH STARTING AND FULL SPEED BYPASS

SELECTOR SWITCH

INDICATING LIGHT

F 60/40 — DISCONNECT SWITCH – 480V 3POLE UNFUSED OR FUSED
F DENOTES FUSING, ONLY WHERE INDICATED
FIRST NUMBER DENOTES SWITCH AMP RATING
SECOND NUMBER DENOTES FUSE SIZE WHEN PROVIDED.

J OR (J) — JUNCTION BOX; SIZE AS REQUIRED BY N.E.C.

T OR (T) — TERMINAL BOX; SIZE AS REQUIRED BY N.E.C. AND TO ACCOMMODATE ALL TERMINATIONS ON TERMINAL BLOCKS. TERMINATIONS TO INCLUDE SPARE WIRING.

PB OR (PB) — PULL BOX; SIZE AS REQUIRED BY N.E.C.

M RV — MOTOR STARTER/CONTROLLER
(NON–COMBINATION – COMBINATION – MANUAL)
RV DENOTES REDUCED VOLTAGE

(M) (5) — ELECTRIC MOTOR (NUMBER INDICATES HORSEPOWER).

5 — ELECTRIC NON–MOTOR LOAD (NUMBER INDICATES KVA).

MV — MOTORIZED VALVE WITH CONTROLLER BY VENDOR

MOV OR (MV) — MOTORIZED VALVE

(ZI) — ZONE INTERLOCK

(ZI) — METER FUNCTIONS

(ZSC) — LIMIT SWITCH CLOSED

(PIT) — PRESSURE TRANSMITTER (I DENOTES INDICATING TYPE, AND PE DENOTES PRESSURE ELEMENT)

(LIT) — LEVEL TRANSMITTER (LE DENOTES LEVEL ELEMENT)

(FIT) — FLOW TRANSMITTER (FE DENOTES FLOW ELEMENT)

(TS) — TEMPERATURE SWITCH (TSH DENOTES TEMPERATURE SWITCH HIGH AND TSL DENOTES TEMPERATURE SWITCH LOW)

(LS) — LEVEL SWITCH (LSH DENOTES LEVEL SWITCH HIGH AND LSL DENOTES LEVEL SWITCH LOW. LE DENOTES LEVEL ELEMENT)

(ZC) — STROKE POSITIONER

LIGHTING SYSTEM

1–3 / a — FLUORESCENT LIGHTING FIXTURE – SURFACE OR PENDANT MOUNTED. FIRST NUMERAL DENOTES LIGHTING PANEL (LP1), SECOND NUMBER DENOTES BRANCH CIRCUIT NUMBER. LOWER CASE LETTER DENOTES SWITCHED CIRCUIT.

EM — FLUORESCENT LIGHTING FIXTURE WITH BATTERY PACK SURFACE OR PENDANT.

PENDANT OR CEILING MOUNTED LIGHTING FIXTURE.

WALL MOUNTED LIGHTING FIXTURE.

POLE OR STANCHION MOUNTED LIGHTING FIXTURE.

TWO (2) POLE OR STANCHION MOUNTED LIGHTING FIXTURES

GF — POLE MOUNTED FIXTURE WITH GF RECEPTACLE

EXIT SIGN WALL MOUNTED (SINGLE FACE WITH INDICATING ARROWS) WITH BATTERY PACK ARROW INDICATES DIRECTION OF EXIT DOOR

D / 150 / 10'–0" AFF — FIXTURE DESIGNATION SYMBOL. SEE LIGHTING FIXTURE SCHEDULE FOR DESCRIPTION AND TYPE. ALL FIXTURES SHOWN IN A ROOM WITH THIS SYMBOL SHALL BE OF TYPE INDICATED BY LETTER; NUMBER IN SYMBOL INDICATES LAMP WATTAGE AND NUMBER OF LAMPS WHERE MORE THAN ONE (UNLESS OTHERWISE NOTED). NUMBER BELOW SYMBOL INDICATES MOUNTING HEIGHT ABOVE FINISHED FLOOR OR AS NOTED.

1–2 / GF/SS — DUPLEX CONVENIENCE RECEPTACLE, 2 POLE, 3 WIRE, 120 VOLTS A.C. 20 AMP RECEPTACLE DESIGNATIONS, FIRST NUMBER DENOTES PANEL, SECOND NUMBER DENOTES CIRCUIT NUMBER. GF–DENOTES GROUND FAULT TYPE. SS–DENOTES SURGE SUPPRESSION TYPE WP–DENOTES WEATHERPROOF ENCLOSURE

S^a — SINGLE POLE SWITCH – LOWER CASE LETTER DENOTES SWITCHING.

S_2 — TWO POLE SWITCH

S_3 — THREE–WAY SWITCH

S_4 — FOUR–WAY SWITCH

LP1–2 — BRANCH CIRCUIT HOME RUN TO PANELBOARD LETTERS AND NUMERALS INDICATE PANEL AND CIRCUIT NUMBER. AS A MINIMUM, ALL WIRING SHALL BE 3#12 AWG IN 3/4" CONDUIT. #10 AWG WIRE SHALL BE USED FOR RUNS BETWEEN PANEL AND FIRST LIGHTING FIXTURE OR RECEPTACLE EXCEEDING 50 FEET, UNLESS OTHERWISE NOTED ON DRAWING.

J LP1–2 / 10 — LETTERS AND NUMBERS INDICATE PANEL AND CIRCUIT NUMBER (LP1–2). CROSS LINES INDICATE NUMBER OF CONDUCTORS. HALF HASH MARKS INDICATES NEUTRAL. NUMBER (10) DENOTES WIRE SIZE WHEN NOT #12 AWG. CONTINUE CONDUIT AND WIRE RUN FROM BOX TO DEVICE IN ROOM OR AREA AS NOTED BY BRANCH CIRCUIT NUMBER. #10 AWG WIRING SHALL BE USED FOR RUNS BETWEEN PANEL AND FIRST LIGHTING FIXTURE OR RECEPTACLE EXCEEDING 50 FEET, UNLESS OTHERWISE NOTED ON DRAWING.

INDICATES GROUND CONDUCTOR

C12 — INDICATES HOMERUN AND CONDUIT TAG

INDICATES NEW EQUIPMENT/EXPOSED CONDUIT

INDICATES EXISTING EQUIPMENT/CONDUIT

LIGHTNING AIR TERMINAL

CONTROL DIAGRAM

GROUND TEST POINT

GROUND ROD

GROUND GRID CABLE CONNECTION

GROUND

DEVICE LOCATED IN FIELD AT OR NEAR MOTOR

DEVICE LOCATED IN CONTROL PANEL

GRN / PT — INDICATING LIGHT, PT–DENOTES PUSH TO TEST TYPE, ABBREVIATION INDICATES LENS COLOR

SWITCH – TOGGLE
OPEN

MOMENTARY CONTACT
PUSH BUTTON
NORMALLY OPEN

MOMENTARY CONTACT
PUSH BUTTON
NORMALLY CLOSED

SWITCH – TEMPERATURE
NORMALLY CLOSED. OPENS ON RISING TEMPERATURE

SWITCH – TEMPERATURE
NORMALLY OPEN. CLOSES ON RISING TEMPERATURE

SWITCH – LIMIT
NORMALLY OPEN

CR1 — NORMALLY OPEN CONTACT, NUMBER INDICATES RELAY.

NORMALLY CLOSED CONTACT

OL — THERMALLY ACTUATED MOTOR OVERLOAD RELAY, LATCHES CLOSED ON OVERLOAD

OL — THERMALLY ACTUATED MOTOR OVERLOAD RELAY, LATCHES OPEN ON OVERLOAD

NOTC — NORMALLY OPENED CONTACT – TIMED CLOSED TIME DELAY AFTER COIL ENERGIZED

NCTO — NORMALLY CLOSED CONTACT– TIMED OPEN TIME DELAY AFTER COIL ENERGIZED

(M) — MOTOR STARTER
CONTACTOR COIL
COIL DESIGNATION:
M–COIL

(CR) — CONTROL RELAY
COIL DESIGNATION:
CR–CONTROL RELAY
MX–AUXILIARY RELAY
TR–TIMING RELAY
AR–ALARM RELAY
RR–READY RELAY

H A (X,O) (O,X) — SELECTOR SWITCH, 2 POSITION MAINTAINED CONTACT
(O,X) DENOTES CONTACT BLOCK CONFIGURATION X INDICATES CONTACT CLOSED, O DENOTES CONTACT OPEN.

H O A — SELECTOR SWITCH, 3 POSITION MAINTAINED CONTACT

OR — ELECTRIC SPACE HEATER ELEMENT

ETM — ELAPSED TIME METER

MANUAL SPEED CONTROL

FIRE ALARM SYSTEM

FACP — FIRE ALARM CONTROL PANEL

H — HORN

F — MANUAL PULL STATION

SD — SMOKE DETECTOR, MULTISENSOR

ABBREVIATIONS

A	AMPERES	LS	LEVEL SWITCH
AC	ALTERNATING CURRENT	LTG	LIGHTING
AMB	AMBER	LV	LOW VOLTAGE
BKR	BREAKER	mA	MILLIAMPERE
BLU	BLUE	M	MOTOR
C, CND	CONDUIT	MCC	MOTOR CONTROL CENTER
CA	CONDUIT, ANALOG	MDP	MAIN DISTRIBUTION PANEL
CB	CIRCUIT BREAKER	MFR	MANUFACTURER
CBV	CABLE BY VENDOR, INSTALLED BY CONTRACTOR	MIN	MINIMUM
CLG	CEILING	MTG	MOUNTING
CTRL	CONTROL	N/A	NOT APPLICABLE
CP	CONTROL PANEL	NC	NORMALLY CLOSED
CPB	CONTROL PULL BOX (–X DISCRETE, –XA ANALOG)	NO	NORMALLY OPEN
CS	CONTROL STATION	NEC	NATIONAL ELECTRIC CODE
DC	DIRECT CURRENT	NTS	NOT TO SCALE
DWG	DRAWING	OL	OVERLOAD RELAY
EC	EMPTY CONDUIT	PB	PULL BOX
EHH	ELECTRICAL HANDHOLE	PLC	PROGRAMMABLE LOGIC CONTROLLER
EL, ELEV	ELEVATION	PNL	PANEL
EMH	ELECTRICAL MANHOLE	PRI	PRIMARY
EMT	ELECTRICAL METALLIC TUBING	PS	PRESSURE SWITCH
EXIST	EXISTING	PT	POTENTIAL TRANSFORMER
FDR	FEEDER	PVC	POLYVINYL CHLORIDE
FIXT	FIXTURE	RECP	RECEPTACLE
FS	FLOW SWITCH	RGS	RIGID GALVANIZED STEEL
FT	FEET OR FOOT	REQ'D	REQUIRED
FUT	FUTURE	SEC	SECONDARY
FVNR	FULL VOLTAGE NON–REVERSING	SP	SPARE
GALV	GALVANIZED	SPD	SURGE PROTECTION DEVICE
GEC	GROUNDING ELECTRODE CONDUCTOR	SST	STAINLESS STEEL
G, GND	GROUND	SWBD	SWITCHBOARD
GF, GFI	GROUND FAULT INTERRUPTER	SWGR	SWITCHGEAR
GFCI	GROUND FAULT CIRCUIT INTERRUPTER	TEMP	TEMPERATURE
GRN	GREEN	TEW	THERMOCOUPLE EXTENSION WIRE
HH	HAND HOLE	TS	TEMPERATURE SWITCH
HOA	HAND/OFF/AUTO	TYP	TYPICAL
HOR	HAND/OFF/REMOTE	UG	UNDERGROUND
HTR	HEATER	UON	UNLESS OTHERWISE NOTED
IN, "	INCHES	UPS	UNINTERRUPTIBLE POWER SUPPLY
JB	JUNCTION BOX	V	VOLTS
KAIC	THOUSAND AMPERES INTERRUPTING CURRENT	VAC	VOLTS ALTERNATING CURRENT
KCMIL	THOUSAND CIRCULAR MILS	VFD	VARIABLE FREQUENCY DRIVE
KVA	THOUSAND VOLT AMPERES	WHI	WHITE
KW	KILOWATTS	WP	WEATHERPROOF
LA	LIGHTNING ARRESTOR	XFMR	TRANSFORMER
LCP	LOCAL CONTROL PANEL	XP	EXPLOSION PROOF

GENERAL NOTES:

1. THE SYMBOLS AND ABBREVIATIONS LIST ON THIS SHEET IS A COMPREHENSIVE STANDARD GUIDE INTENDED FOR GENERAL USE ON ALL PROJECTS. THEREFORE NOT ALL THE SYMBOLS AND ABBREVIATIONS CONTAINED IN THIS LIST ARE NECESSARILY USED ON THIS PARTICULAR PROJECT AND SHOULD BE USED FOR CLARIFICATION ONLY.

2. THE CONTRACTOR SHALL READ AND UNDERSTAND THE ENTIRE SET OF CONSTRUCTION DOCUMENTS. THIS INCLUDES BUT IS NOT LIMITED TO THE PLANS AND SPECIFICATIONS FOR ALL DISCIPLINES. THIS WILL ENSURE THAT HE UNDERSTANDS THE FULL SCOPE OF WORK AND IS ABLE TO CONVEY THE REQUIRED MATERIALS AND METHODS OF INSTALLATION TO THE HIS ESTIMATORS, SUPPLIERS AND INSTALLERS.

3. THE CONTRACTOR SHALL VISIT THE SITE AND FAMILIARIZE HIMSELF WITH THE EXISTING CONDITIONS.

4. PROVIDE MEANS TO FURNISH AND INSTALL.

5. COORDINATE ANY AND ALL WORK WITH OTHER TRADES PRIOR TO INSTALLATION IN ORDER TO AVOID CONFLICTS DURING CONSTRUCTION.

6. THESE DRAWINGS ARE DIAGRAMMATIC IN NATURE. DO NOT SCALE FROM THESE DRAWINGS.

7. WHERE JOB CONDITIONS REQUIRE CHANGES FROM THE CONTRACT DOCUMENTS THAT DO NOT CHANGE THE SCOPE OF INSTALLATION OR NATURE OF THE WORK REQUIRED, THE CONTRACTOR SHALL MAKE SUCH CHANGES WITHOUT ANY ADDITIONAL COST TO THE OWNER. NO OTHER CHANGES MAY BE MADE WITHOUT WRITTEN CONSENT FROM THE ENGINEER AND OWNER.

8. ALL WORK SHALL BE DONE IN ACCORDANCE WITH THE REQUIREMENTS OF THE ENFORCED EDITION OF THE NATIONAL ELECTRIC CODE, NATIONAL ELECTRIC SAFETY CODE, LIFE SAFETY CODE, FLORIDA BUILDING CODE AND ALL LOCAL AND STATE CODES AND REGULATIONS. THE CONTRACTOR SHALL OBTAIN AND PAY FOR ALL PERMITS AND INSPECTIONS REQUIRED BY THE AUTHORITY HAVING JURISDICTION.

9. MOUNTING HEIGHTS INDICATED ARE TO THE CENTER OF THE DEVICE U.O.N.

REV.NO.	DESCRIPTIONS	DATE

REVISIONS

SEAL: MICHAEL A. HAUDRICOURT — LICENSE — No 66861 — STATE OF FLORIDA — PROFESSIONAL ENGINEER

SEAL

McKIM&CREED
1365 Hamlet Avenue
Clearwater, Florida 33756
Phone: (727)442–7196, Fax: (727)461–3827
CA Lic. No. 29588
www.mckimcreed.com

Manatee County FLORIDA

MANATEE COUNTY
WTP BIOLOGICAL TREATMENT UNIT

INDEX & ABBREVIATIONS

DATE:	OCTOBER 2015
MCE PROJ. #	1024–0167
DRAWN	LS
DESIGNED	AH
CHECKED	JSL
PROJ. MGR.	PJL

SCALE — HORIZONTAL: AS SHOWN — VERTICAL: NA

DRAWING NUMBER: E-0.1

STATUS: ISSUE FOR BID — REVISION

s:\1024\0167\90-drawings\Electrical\E-0.1 1024\0167 Index & Abbr.dwg, 9/30/2015 11:17:46 AM, Brian Naugle

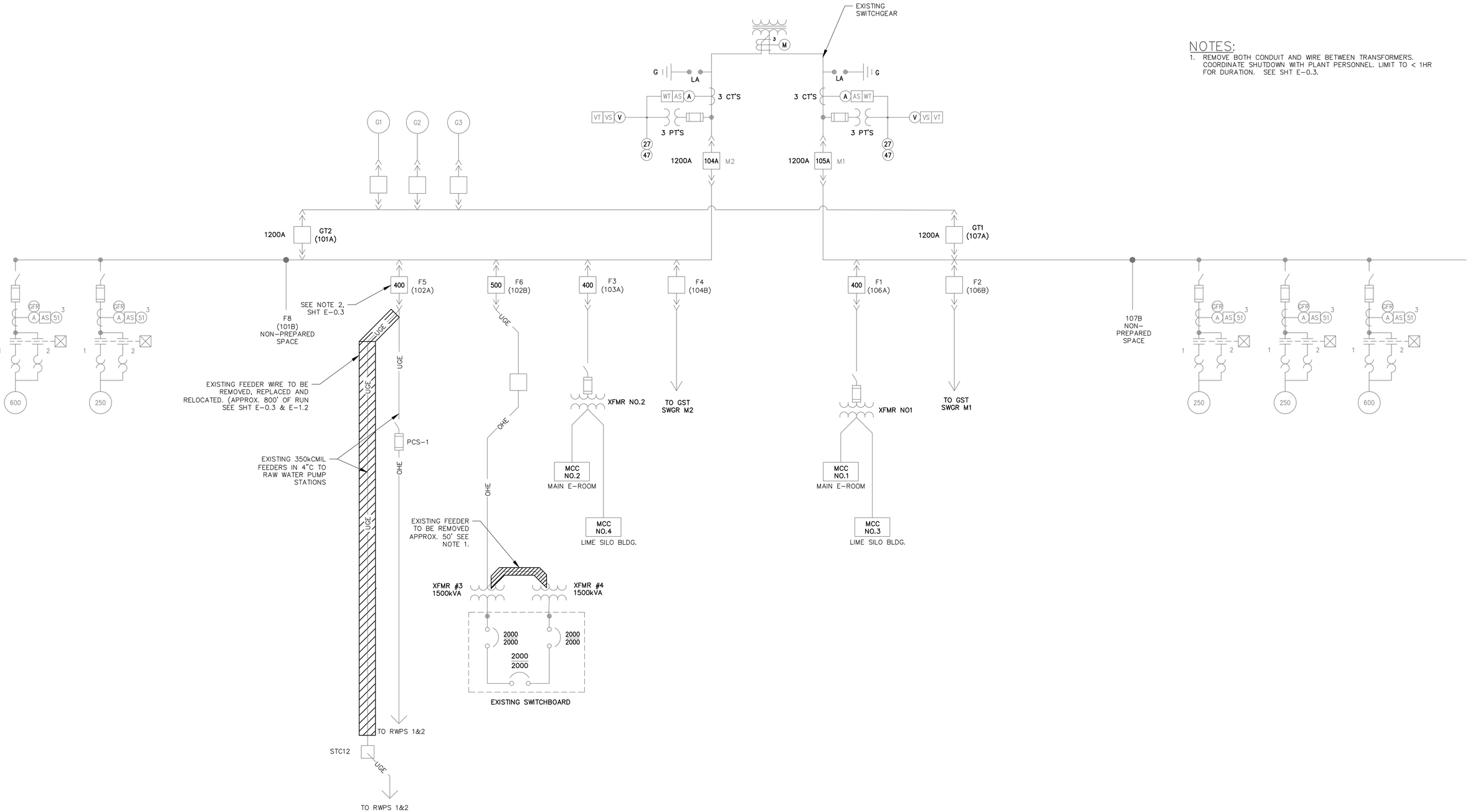

NOTES:

1. REMOVE BOTH CONDUIT AND WIRE BETWEEN TRANSFORMERS. COORDINATE SHUTDOWN WITH PLANT PERSONNEL. LIMIT TO < 1HR FOR DURATION. SEE SHT E-0.3.

REV.NO.	DESCRIPTIONS	DATE

REVISIONS

SEAL

AUBREY A. HAUDA JOURNEY
LICENSE
No 66861
STATE OF FLORIDA
PROFESSIONAL ENGINEER

SEAL

McKIM&CREED
1365 Hamlet Avenue
Clearwater, Florida 33756
Phone: (727)442-7196, Fax: (727)461-3827
CA Lic. No. 29588
www.mckimcreed.com

Manatee County FLORIDA

MANATEE COUNTY
WTP BIOLOGICAL TREATMENT UNIT

EXISTING MV ONE LINE WITH DEMOLITION

DATE:	OCTOBER 2015
MCE PROJ. #	1024-0167
DRAWN	AAH
DESIGNED	AAH
CHECKED	JSL
PROJ. MGR.	PJL

SCALE
HORIZONTAL: AS SHOWN
VERTICAL: NA

DRAWING NUMBER
E-0.2

STATUS: ISSUE FOR BID
REVISION

R:\1024\0167\00-drawings\Electrical\E-0.2 1024\0167 Existing MV Oneline.dwg, 9/30/2015 11:17:55 AM, Brian Naugle

NOTES:

1. INTERCEPT EXISTING UNDERGROUND FEEDER TO RWPS 1 & 2 AND INSTALL FUSED SWITCH ON CONCRETE PAD NEXT TO TERMINAL ENCLOSURE STC12. RE-PULL NEW WIRE FROM NEW BREAKER 107B THROUGH CABINET 102A IN EXISTING 4" CONDUIT TO NEW SWITCH. RECONNECT SWITCH TO STC12.
2. INTERCEPT EXISTING CONDUIT & WIRE IN FEEDER BREAKER SECTION. EXTEND CONDUIT AND RE-PULL WIRE TO NEW FEEDER LOCATION. COORDINATE SHUTDOWN WITH PLANT PERSONNEL. LIMIT TO < 1HR FOR DURATION.
3. COORDINATE SHUTDOWN OF NORTH AND SOUTH PUMP ROOMS WITH PLANT PERSONNEL. LIMIT OUTAGES TO < 2HR. CONNECT GROUNDS TO EXISTING GROUND BUSS AT BOTH FEEDER AND TRANSFORMER LOCATIONS.
4. INSTALL GROUND ROD W/ #4/0 BARE COPPER PER SPECIFICATIONS AT EACH TRANSFORMER. TIE TO GROUND BUS OF TRANSFORMERS AND DUCTBANK #4/0 GROUND WIRE. TIE 4/0 WIRE TO SWITCHGEAR GROUND.
5. CONTRACTOR TO EMPLOY MANUFACTURES REPRESENTATIVE TO CONVERT FEEDER SPACE TO A PREPARED SPACE. PROVIDE ALL NECESSARY APPURTENANCES FOR THE CONVERSION AND INSTALLATION OF THE NEW BREAKER. COORDINATE SHUTDOWNS WITH COUNTY. PROVIDE NEW BREAKER AND INSTALL. REFER TO E-1.3 NOTE 1 FOR MORE INFORMATION.
6. INSTALL NEW TRIP SETTINGS ON EXISTING BREAKER AND TEST.

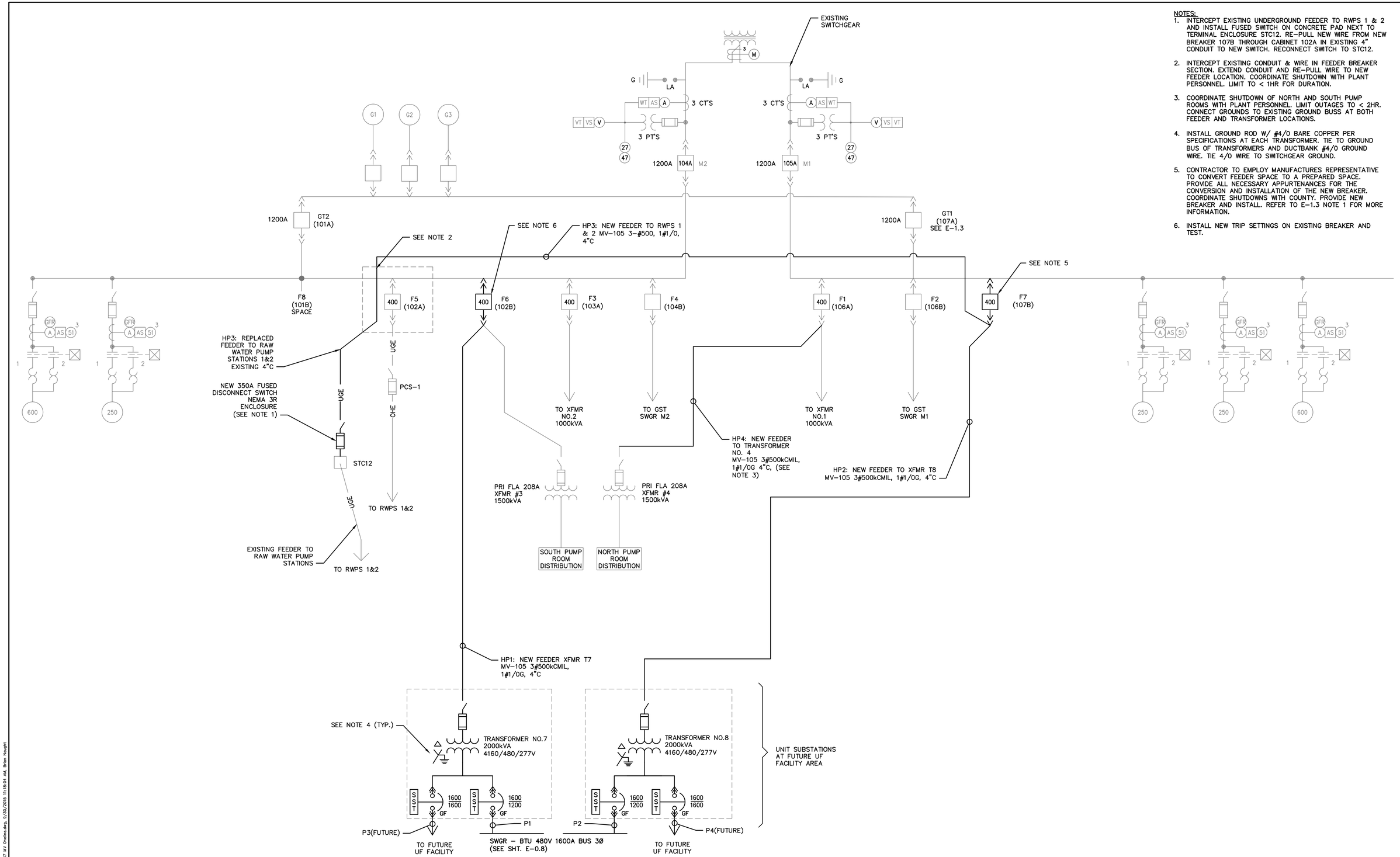

REV.NO.	DESCRIPTIONS	DATE
	REVISIONS	

SEAL

HAUBERT A. HAUDER JR. LICENSE No 66861 STATE OF FLORIDA PROFESSIONAL ENGINEER

SEAL

McKIM&CREED
1365 Hamlet Avenue
Clearwater, Florida 33756
Phone: (727)442-7196, Fax: (727)461-3827
CA Lic. No. 29588
www.mckimcreed.com

Manatee County FLORIDA

MANATEE COUNTY
WTP BIOLOGICAL TREATMENT UNIT

PROPOSED MV ONE LINE

DATE:	OCTOBER 2015
MCE PROJ. #	1024-0167
DRAWN	AAH
DESIGNED	AAH
CHECKED	JSL
PROJ. MGR.	PJL

SCALE
HORIZONTAL: AS SHOWN
VERTICAL: NA

DRAWING NUMBER
E-0.3

STATUS: ISSUE FOR BID
REVISION

E:\1024\0167\80-drawings\Electrical\E-0.3 1024167 MV Oneline.dwg, 9/30/2015 11:18:04 AM, Brian Haught

NOTES:
1. ALL MCC & SWITCHBOARD BREAKERS TO BE 100% RATED WITH ADJUSTABLE ELECTRONIC TRIP.
2. CONDUIT NUMBERING NOT IN SUCCESSION
3. ALL MCC CIRCUIT BREAKERS SHALL HAVE ELECTRONIC TRIP MECHANISMS.

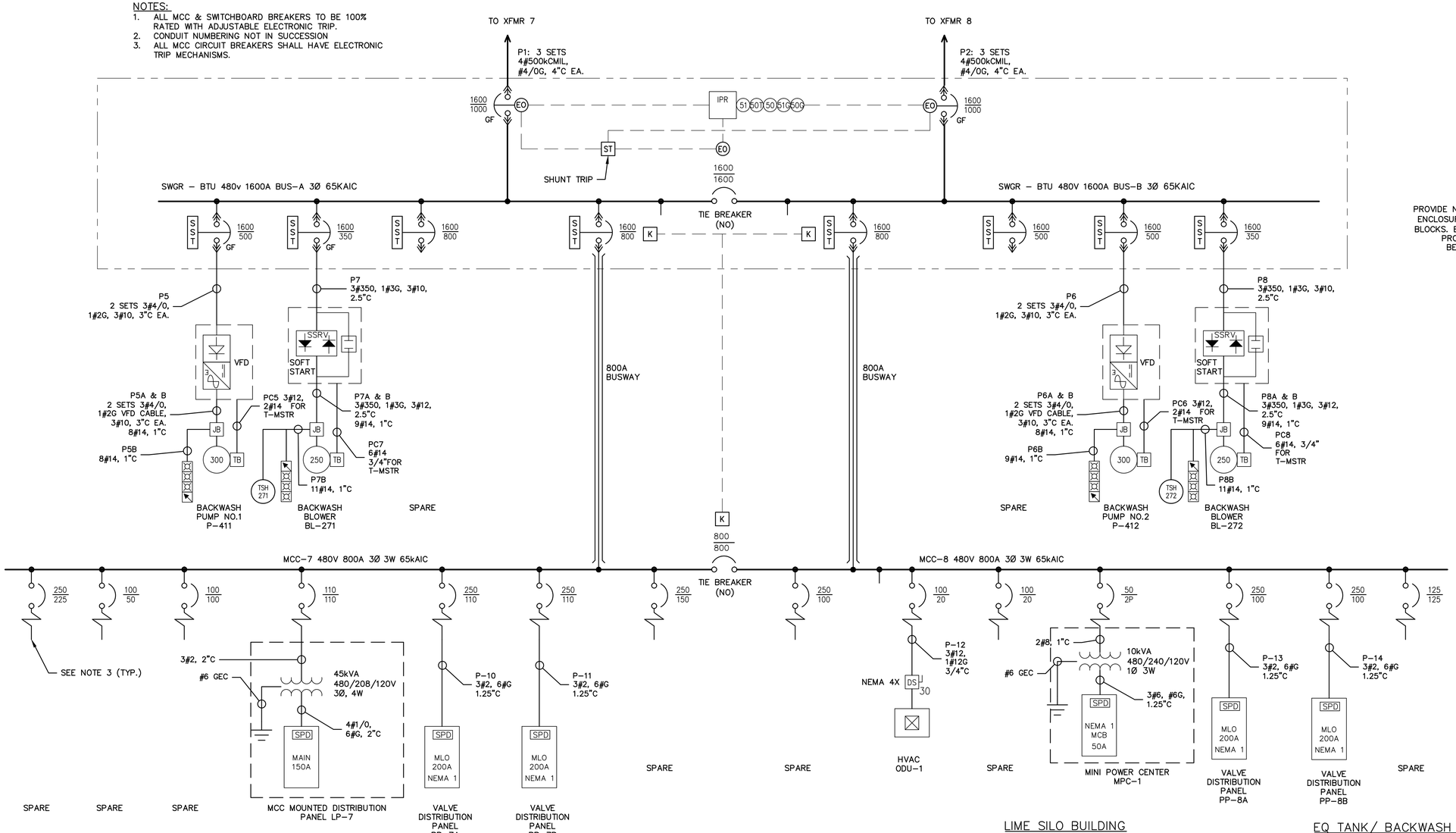

MAINTENANCE BUILDING AREA

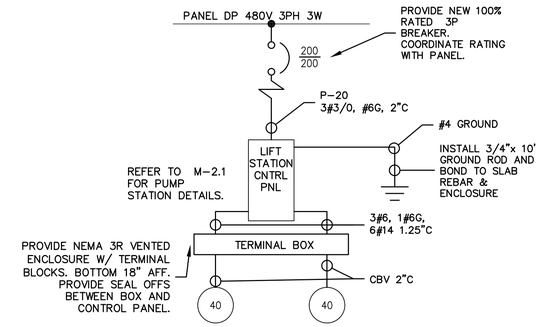

EQ TANK/ BACKWASH POND

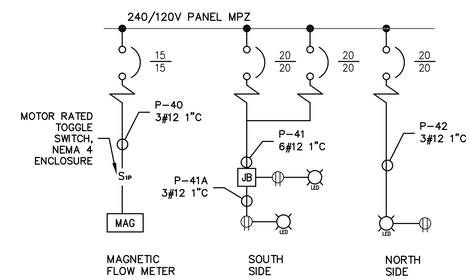

EXISTING FILTER BUILDING

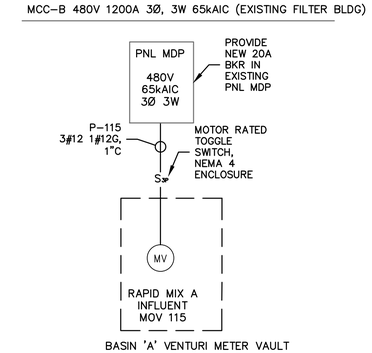

LIME SILO BUILDING

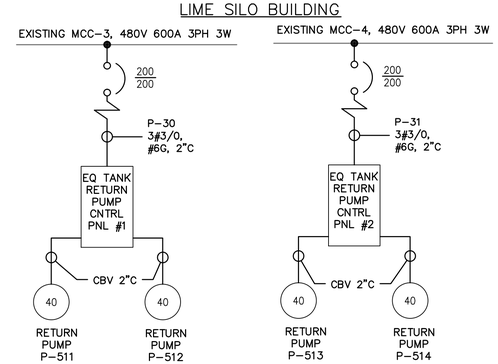

EQ TANK/ BACKWASH POND

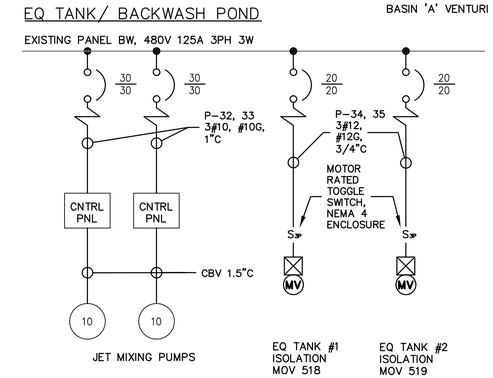

SWBD FEEDER LOAD TABLE				
LOAD	CONNECTED (A)	RUNNING	REMARKS	
BACKWASH PUMP NO.1	361	306.9	@ .85	
BACKWASH PUMP NO.2	361	–	STANDBY	
BLOWER NO.1	240	204.0	@ .85	
BLOWER NO.2	240	–	STANDBY	
	0	0		
	0	0		
MCC–7	89	76		
MCC–8	114	81		
TOTAL (AMPS)	1405.0	667.9		

BIO–FILTER MCC LOAD TABLE				
LOAD	CONNECTED	RUNNING	REMARKS	
XFMR (LP–7)	47.9	40.7	@ .85	
PP–7A	24.4	20.7	@ .85	
PP–7B	16.9	14.4	@ .85	
SUBTOTAL MCC–7	89.2	75.8		
HVAC ODU–1	40.0	34.0	@ .85	
MPC–1	29.1	24.7	@ .85	
PP–8A	24.4	12.2	VALVE PNL @ 50%	
PP–8B	20.6	10.3	VALVE PNL @ 50%	
SUBTOTAL MCC 8	114.1	81.2		
TOTAL (AMPS)	203.3	157.1		

REV.NO.	DESCRIPTIONS	DATE

REVISIONS

SEAL: AUBREY A. HAUER, JR. LICENSED PROFESSIONAL ENGINEER No 66861 STATE OF FLORIDA

SEAL

McKIM&CREED
1365 Hamlet Avenue
Clearwater, Florida 33756
Phone: (727)442–7196, Fax: (727)461–3827
CA Lic. No. 29588
www.mckimcreed.com

Manatee County FLORIDA

MANATEE COUNTY
WTP BIOLOGICAL TREATMENT UNIT

SWITCHGEAR AND MCC–7 & 8 ONE LINE

DATE:	OCTOBER 2015
MCE PROJ. #	1024–0167
DRAWN	AAH
DESIGNED	AAH
CHECKED	JSL
PROJ. MGR.	PJL

SCALE
HORIZONTAL: AS SHOWN
VERTICAL: NA

DRAWING NUMBER: E-0.8

STATUS: ISSUE FOR BID
REVISION

e:\1024\0167\00-drawings\Electrical\E-0.4 1024-0167 SWBD & MCC-7&8 Oneline.dwg, 9/30/2015 11:18:13 AM, Brian Naught

MATCHLINE – SEE SHEET E-1.3

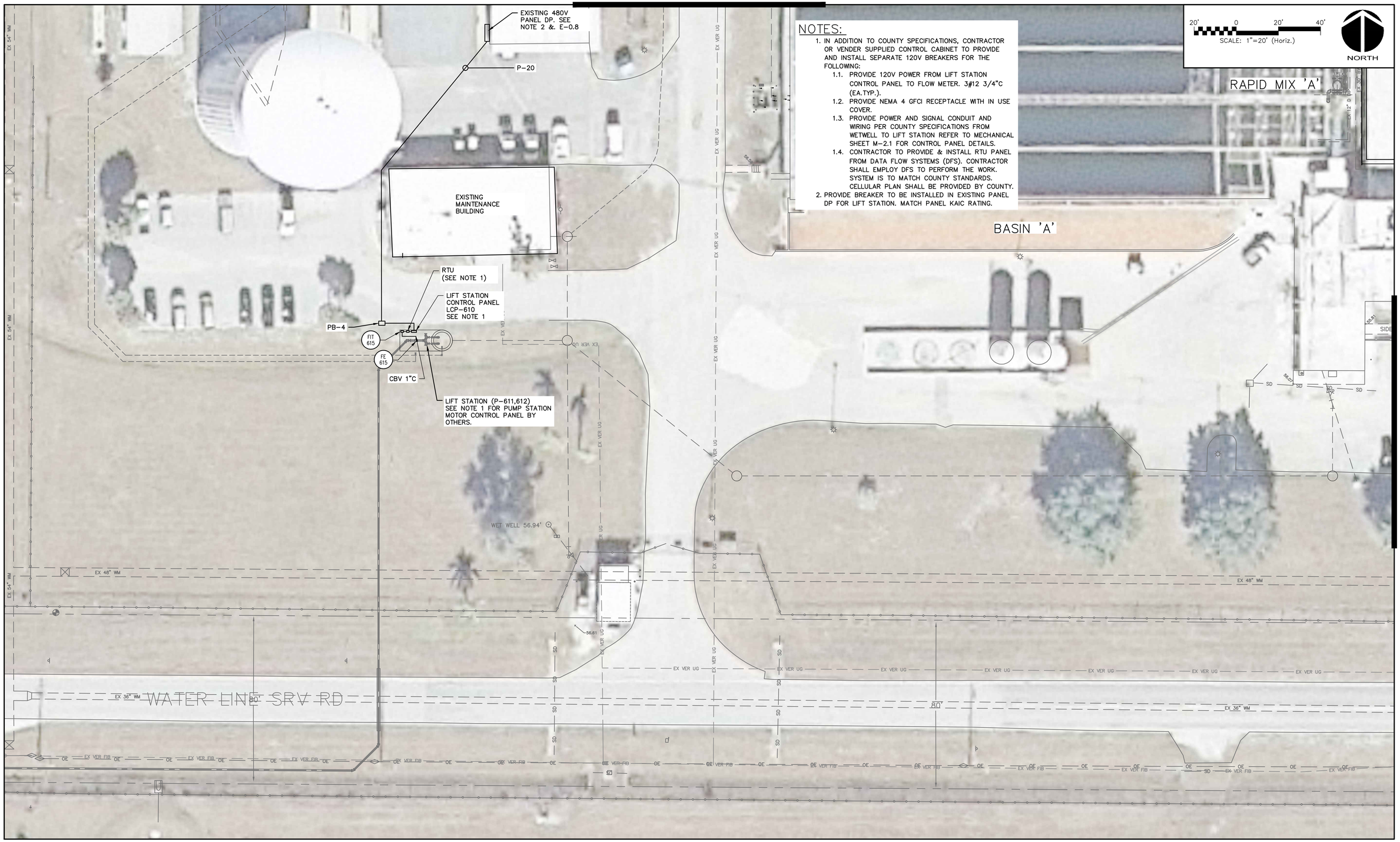

NOTES:

1. IN ADDITION TO COUNTY SPECIFICATIONS, CONTRACTOR OR VENDER SUPPLIED CONTROL CABINET TO PROVIDE AND INSTALL SEPARATE 120V BREAKERS FOR THE FOLLOWING:
   - 1.1. PROVIDE 120V POWER FROM LIFT STATION CONTROL PANEL TO FLOW METER. 3#12 3/4"C (EA.TYP.).
   - 1.2. PROVIDE NEMA 4 GFCI RECEPTACLE WITH IN USE COVER.
   - 1.3. PROVIDE POWER AND SIGNAL CONDUIT AND WIRING PER COUNTY SPECIFICATIONS FROM WETWELL TO LIFT STATION REFER TO MECHANICAL SHEET M-2.1 FOR CONTROL PANEL DETAILS.
   - 1.4. CONTRACTOR TO PROVIDE & INSTALL RTU PANEL FROM DATA FLOW SYSTEMS (DFS). CONTRACTOR SHALL EMPLOY DFS TO PERFORM THE WORK. SYSTEM IS TO MATCH COUNTY STANDARDS. CELLULAR PLAN SHALL BE PROVIDED BY COUNTY.
2. PROVIDE BREAKER TO BE INSTALLED IN EXISTING PANEL DP FOR LIFT STATION. MATCH PANEL KAIC RATING.

MATCHLINE – SEE SHEET E-1.2

REV.NO.	DESCRIPTIONS	DATE
	REVISIONS	

SEAL

AUDREY A. HAUDRICOURT
No 66861
STATE OF FLORIDA
PROFESSIONAL ENGINEER

SEAL

McKIM&CREED
1365 Hamlet Avenue
Clearwater, Florida 33756
Phone: (727)442-7196, Fax: (727)461-3827
CA Lic. No. 29588
www.mckimcreed.com

Manatee County FLORIDA

MANATEE COUNTY
WTP BIOLOGICAL TREATMENT UNIT

ELECTRICAL SITE PLAN 1

DATE:	OCTOBER 2015
MCE PROJ. #	1024-0167
DRAWN	AAH
DESIGNED	AAH
CHECKED	JSL
PROJ. MGR.	PJL

SCALE
HORIZONTAL: 1" = 20'
VERTICAL: NA

DRAWING NUMBER
E-1.1

STATUS: ISSUE FOR BID
REVISION

e:\1024\0167\00-drawings\Electrical\E-1.1 1024\0167 E-Site Plan 1.dwg, 9/30/2015 11:18:57 AM, Brian Naught

MATCHLINE – SEE SHEET E-1.4

MATCHLINE – SEE SHEET E-1.1

20' 0 20' 40'
SCALE: 1"=20' (Horiz.)

NORTH

PHOTO 1 E-1.2 E-1.3
NTS

PARTIAL ROOF PHOTOGRAPH
FEEDER HP4 ROOF SUPPORTS
PHOTO LOOKING NORTH

NOTES:

1. CONTRACTOR TO REPLACE EXISTING A-FRAME BOX SUPPORTS OF CONDUIT WITH NEW FRP UV RATED SUPPORT SYSTEM (APPROX. 60 SUPPORTS SEE PHOTO THIS SHEET) PROVIDE ALL ANCHORING AND ROOF PROTECTION. PROVIDE ANY ROOF PATCHING AS NECESSARY WERE SUPPORTS ARE REMOVED OR RE-INSTALLED. PROTECT ROOF WORK AREA DURING CONSTRUCTION ACTIVITIES ON THE ROOF.

REV.NO.	DESCRIPTIONS	DATE

REVISIONS

SEAL

AUBREY A. HAUDRY JOURNEY
LICENSE
No 66861
STATE OF FLORIDA
PROFESSIONAL ENGINEER

SEAL

McKIM&CREED
1365 Hamlet Avenue
Clearwater, Florida 33756
Phone: (727)442-7196, Fax: (727)461-3827
CA Lic. No. 29588
www.mckimcreed.com

Manatee County FLORIDA

MANATEE COUNTY
WTP BIOLOGICAL TREATMENT UNIT

ELECTRICAL SITE PLAN 2

DATE:	OCTOBER 2015
MCE PROJ. #	1024-0167
DRAWN	AAH
DESIGNED	AAH
CHECKED	JSL
PROJ. MGR.	PJL

SCALE
HORIZONTAL: 1" = 20'
VERTICAL: NA

DRAWING NUMBER
E-1.2

STATUS: ISSUE FOR BID
REVISION

s:\1024\0167\90-drawings\Electrical\E-1.2 1024\0167 E-Site Plan 2.dwg, 9/30/2015 11:19:41 AM, Brian Naught

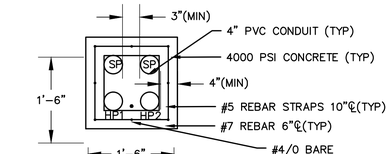

1 / 1.3 1.3 MEDIUM VOLTAGE DUCTBANK

5kV DUCTBANK DETAIL

NTS

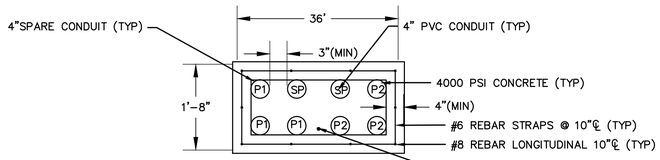

2 / 1.3 1.3 LOW VOLTAGE DUCTBANK

LV DUCTBANK DETAIL

NTS

NOTES:

1. CONTRACTOR TO REMOVE CONTROL & POWER WIRE CIRCUITS AND CUT CONDUIT FLUSH IN BREAKER SPACE F7 (107B) TO GT-1. (PROVIDE TEMP POWER & CONTROL AS NEEDED) THIS IS TO CLEAR THE SPACE FOR THE NEW MV POWER BREAKER. CONTRACTOR TO REPULL IN NEW OVERHEAD CONDUIT (1-1",1-1.25") CONTROL & POWER CIRCUITS FOR GT-1 TO GENERATOR SWITCHGEAR. CONTRACTOR TO EMPLOY THE SERVICE OF THE COUNTY'S EMERSON (ASCO) REPRESENTATIVE TO TERMINATE AND TEST GENERATOR CONTROL CIRCUITS FOR GT-1.
2. FEEDER P4: CONTRACTOR TO SURFACE MOUNT TO WALL 4" CONDUIT. PROVIDE JUNCTION BOXES AS NECESSARY TO TURN AND RUN UNDER PIPE SUPPORTS ALONG WALKWAY, THEN TURN AND RUN ON ROOF TOP UTILIZING SUPPORTS FOR EXISTING FEEDER CONDUITS TO TRANSFORMER 3 & 4 AREA. PROVIDE ANY NEW SUPPORTS AS NECESSARY.
3. CONTRACTOR TO INTERCEPT EXISTING CONDUIT, EXTEND INTO PULLBOXES AND NEW VENTURI AND VALVE ACTUATOR AND RE-PULL NEW WIRE TO CONTROL ROOM CONSOLE FOR SIGNALS. FOR POWER, BRING NEW CONDUIT IN TO DISTRIBUTION PANELS MDP. INSTALL NEW 3P 20A BREAKER FOR VALVE. PROVIDE CONDUIT, WIRE AND JUNCTION BOXES AS NECESSARY.

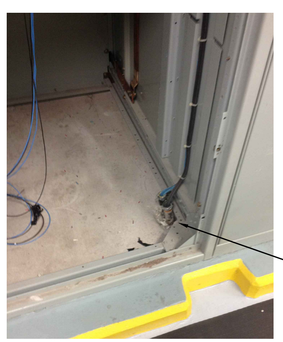

PHOTO 1 / E-1.3 E-1.3 PARTIAL PHOTOGRAPH

NTS

FEEDER SECTION 107B

NTS

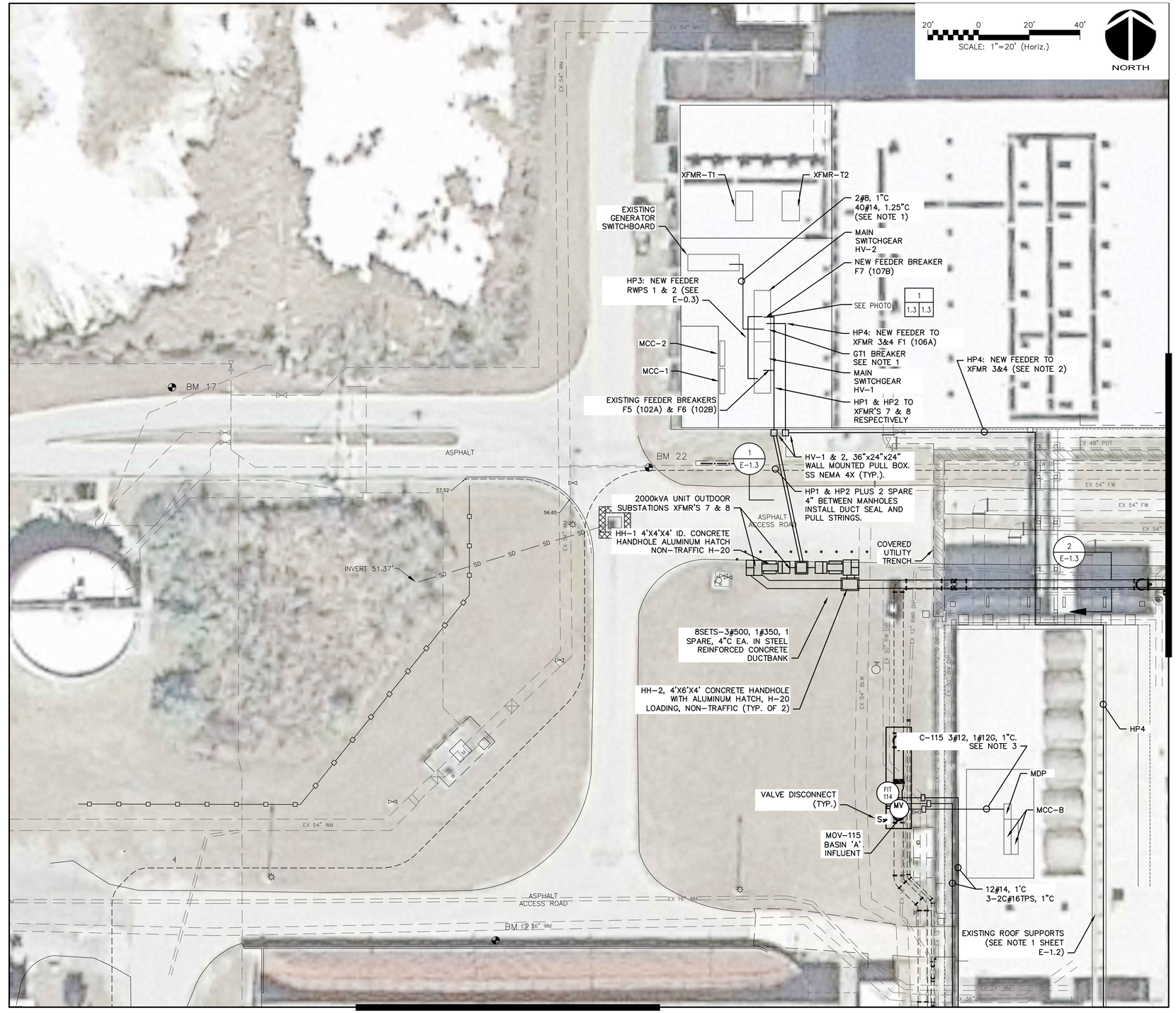

MATCHLINE - SEE SHEET E-1.1

REV.NO.	DESCRIPTIONS	DATE

REVISIONS

SEAL: HAUBRICH, AUBREY A. LICENSE No 66861 STATE OF FLORIDA PROFESSIONAL ENGINEER

SEAL

McKIM&CREED
1365 Hamlet Avenue
Clearwater, Florida 33756
Phone: (727)442-7196, Fax: (727)461-3827
CA Lic. No. 29588
www.mckimcreed.com

Manatee County FLORIDA

MANATEE COUNTY
WTP BIOLOGICAL TREATMENT UNIT

ELECTRICAL SITE PLAN 3

DATE:	OCTOBER 2015
MCE PROJ. #	1024-0167
DRAWN	AAH
DESIGNED	AAH
CHECKED	JSL
PROJ. MGR.	PJL

SCALE
HORIZONTAL: 1" = 20'
VERTICAL: NA

DRAWING NUMBER: E-1.3

STATUS: ISSUE FOR BID

REVISION

MATCHLINE – SEE SHEET E-1.5

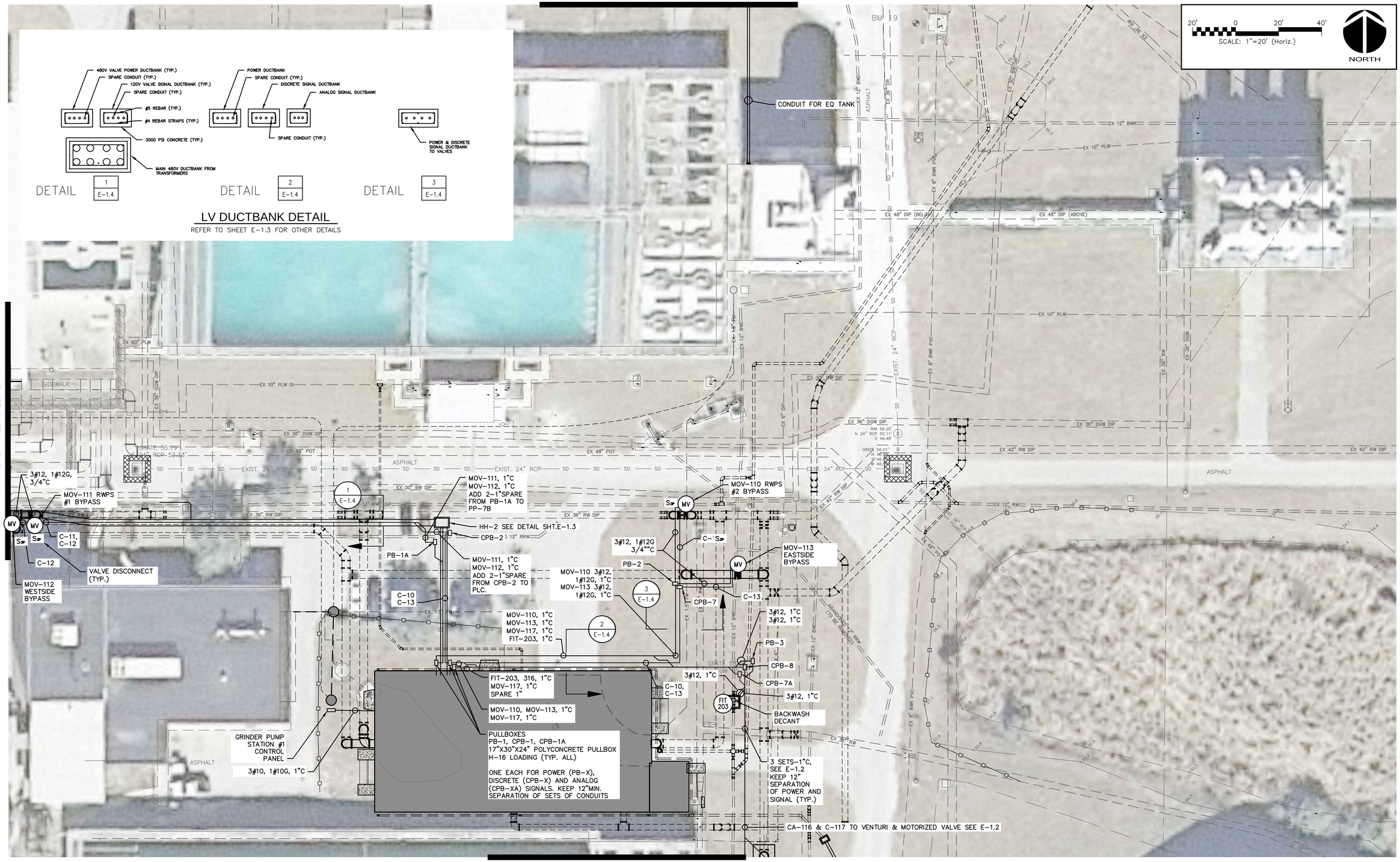

MATCHLINE – SEE SHEET E-1.2

REV.NO.	DESCRIPTIONS	DATE

REVISIONS

SEAL

AUBREY A. HAUDSHURST
LICENSE
No 66861
STATE OF FLORIDA
PROFESSIONAL ENGINEER

SEAL

McKIM&CREED
1365 Hamlet Avenue
Clearwater, Florida 33756
Phone: (727)442-7196, Fax: (727)461-3827
CA Lic. No. 29588
www.mckimcreed.com

Manatee County FLORIDA

MANATEE COUNTY WTP BIOLOGICAL TREATMENT UNIT

ELECTRICAL SITE PLAN 4

DATE:	OCTOBER 2015
MCE PROJ. #	1024-0167
DRAWN	AAH
DESIGNED	AAH
CHECKED	JSL
PROJ. MGR.	PJL

SCALE
HORIZONTAL: 1" = 20'
VERTICAL: NA

DRAWING NUMBER: E-1.4

STATUS: ISSUE FOR BID

REVISION

e:\1024\0167\80-drawings\Electrical\E-1.4 1024\0167 E-Site Plan 4.dwg, 9/30/2015 11:21:29 AM, Brian Naugle

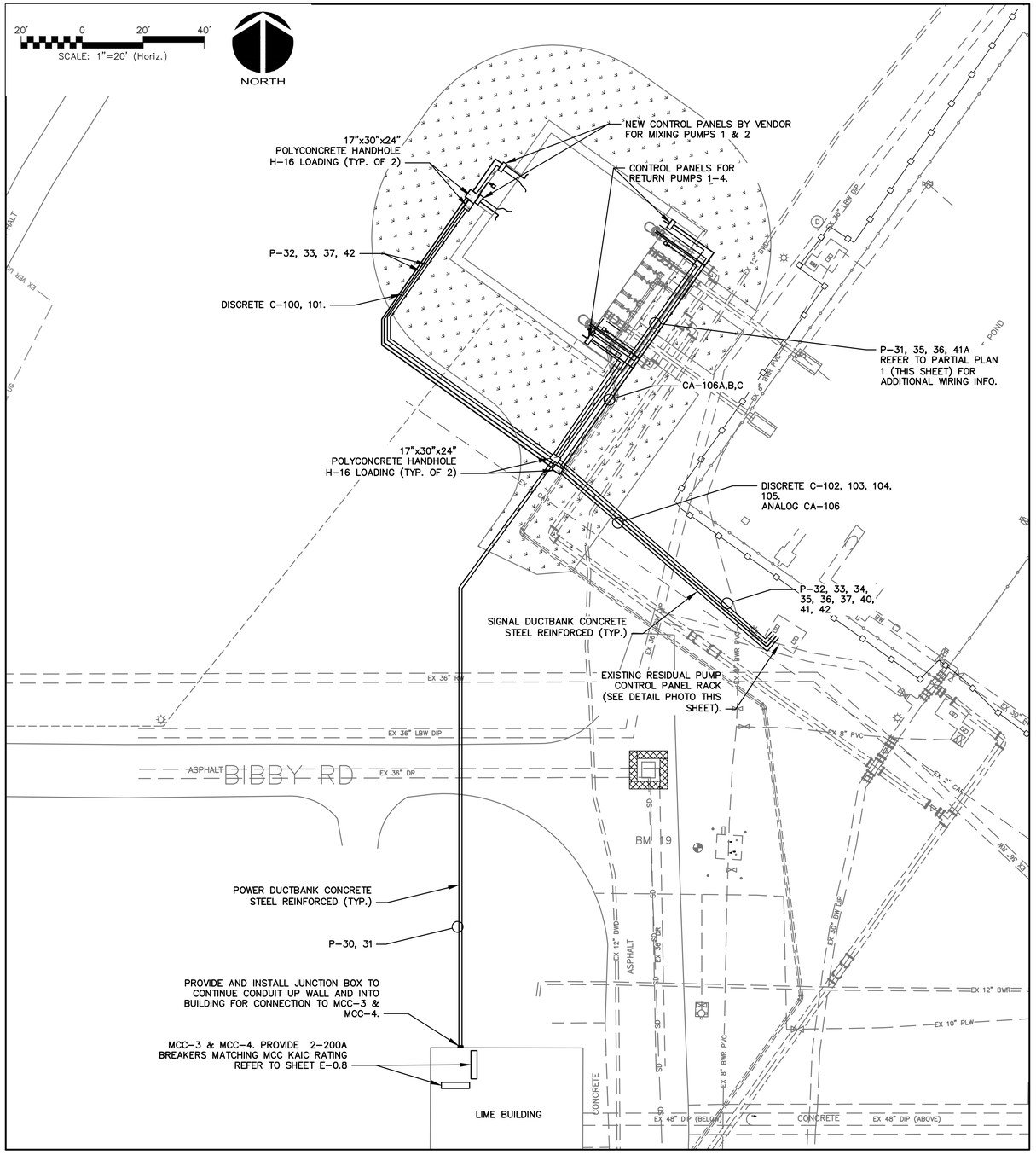

PARTIAL SITE PLAN

EQ & RESIDUAL TANKS

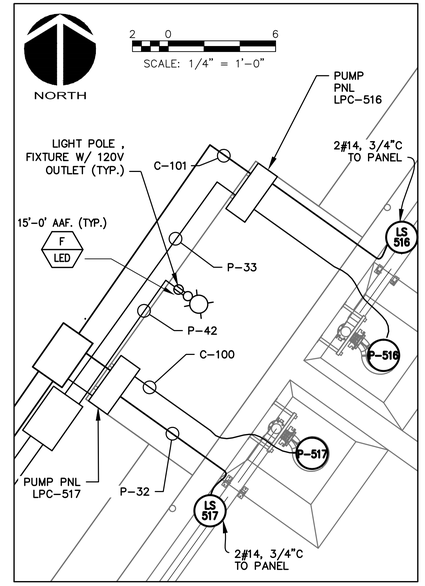

PARTIAL SITE PLAN 1

EQ TANK NORTH SIDE

1/4"=1'-0"

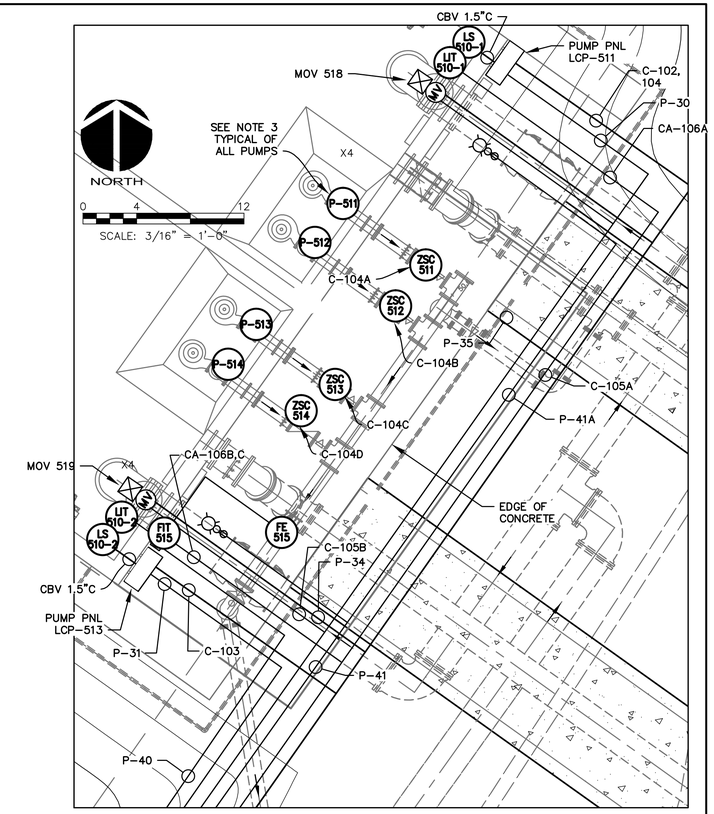

PARTIAL SITE PLAN 2

EQ TANK SOUTH SIDE

3/16"=1'-0"

PHOTO FACING NORTH

PUMP STATION 1A CONTROL PANEL RACK

NTS

NOTES:

1. PROVIDE TWO NEW FULLY RATED 200A BREAKERS IN EXISTING BW 480V PANEL. MATCH KAIC RATING
2. PROVIDE NEW BREAKERS AS REQUIRED MATCH KAIC RATING OF PANEL MPZ.
3. REFER TO SHEET E-3.1 FOR MORE CONTROL WIRING INFORMATION.

PHOTO FACING SOUTH

PUMP STATION 1A CONTROL PANEL RACK

NTS

REV.NO.	DESCRIPTIONS	DATE

REVISIONS

SEAL

SEAL

McKIM&CREED
1365 Hamlet Avenue
Clearwater, Florida 33756
Phone: (727)442-7196, Fax: (727)461-3827
CA Lic. No. 29588
www.mckimcreed.com

Manatee County FLORIDA

MANATEE COUNTY
WTP BIOLOGICAL TREATMENT UNIT

ELECTRICAL EQUALIZATION TANK SITE PLAN

DATE:	OCTOBER 2015
MCE PROJ. #	1024-0167
DRAWN	AAH
DESIGNED	AAH
CHECKED	JSL
PROJ. MGR.	PJL

SCALE
HORIZONTAL: 1" = 20'
VERTICAL: NA

DRAWING NUMBER: E-1.5

STATUS: ISSUE FOR BID

REVISION

e:\1024\0167\80-drawings\Electrical\E-1.5 1024\0167 E-Site Plan 5.dwg, 9/30/2015 11:22:37 AM, Brian Naught

1ST FL. ELECTRICAL VALVE CHART (REFER TO PANEL SCHEDULE FOR CKT #)		
VALVE NAME	POWER PP-X / SIGNAL WIRE (PLC-7)	REMARKS
FILTER EFFLUENT MOV 2X1-1	3#12, 1#12G 3/4"C, 8#14, 3/4"C, 2-2C#16TPS, 3/4"C	MODULATING
BACKWASH SUPPLY MOV-2X1-2	3#12, 1#12G 3/4"C, 12#14, 3/4"C	OPEN/CLOSE
BACKWASH TO WASTE MOV-2X1-3	3#12, 1#12G 3/4"C, 12#14, 3/4"C	OPEN/CLOSE
FILTER TO WASTE MOV-2X1-4	3#12, 1#12G 3/4"C, 12#14, 3/4"C,	OPEN/CLOSE
WEST BTU INF WATER MOV-201	3#12, 1#12G 3/4"C, 8#14, 3/4"C, 2-2C#16TPS, 3/4"C	MODULATING
EAST BTU INF WATER MOV-202	3#12, 1#12G 3/4"C, 8#14, 3/4"C, 2-2C#16TPS, 3/4"C	MODULATING
COMMON FILTER DRAIN MOV-205	3#12, 1#12G 3/4"C, 12#14, 3/4"C	OPEN/CLOSE
CLEARWELL FILL MOV-204	3#12, 1#12G 3/4"C, 12#14, 3/4"C	OPEN/CLOSE

NOTES:

1. LOCATION OF INSTRUMENTATION APPROXIMATE. COORDINATE WITH MECHANICAL FOR EXACT LOCATION. WHERE INSTRUMENTATION CANNOT BE WALL OR COLUMN MOUNTED WITH CLEAR ACCESS; MOUNT ON STANDS PER DETAILS ON INSTRUMENT SHEETS.
2. VALVE ACTUATOR LOCATIONS AND ORIENTATION APPROXIMATE, COORDINATE WITH MECHANICAL. PROVIDE ACTUATORS WITH REMOTE CONTROL STATIONS FOR ACTUATORS ABOVE 5'-6" AFF. OR WITH LIMITED ACCESS.
3. PROVIDE WIREWAYS UNDER DISTRIBUTION PANELS FOR CONDUIT CONSOLIDATION.

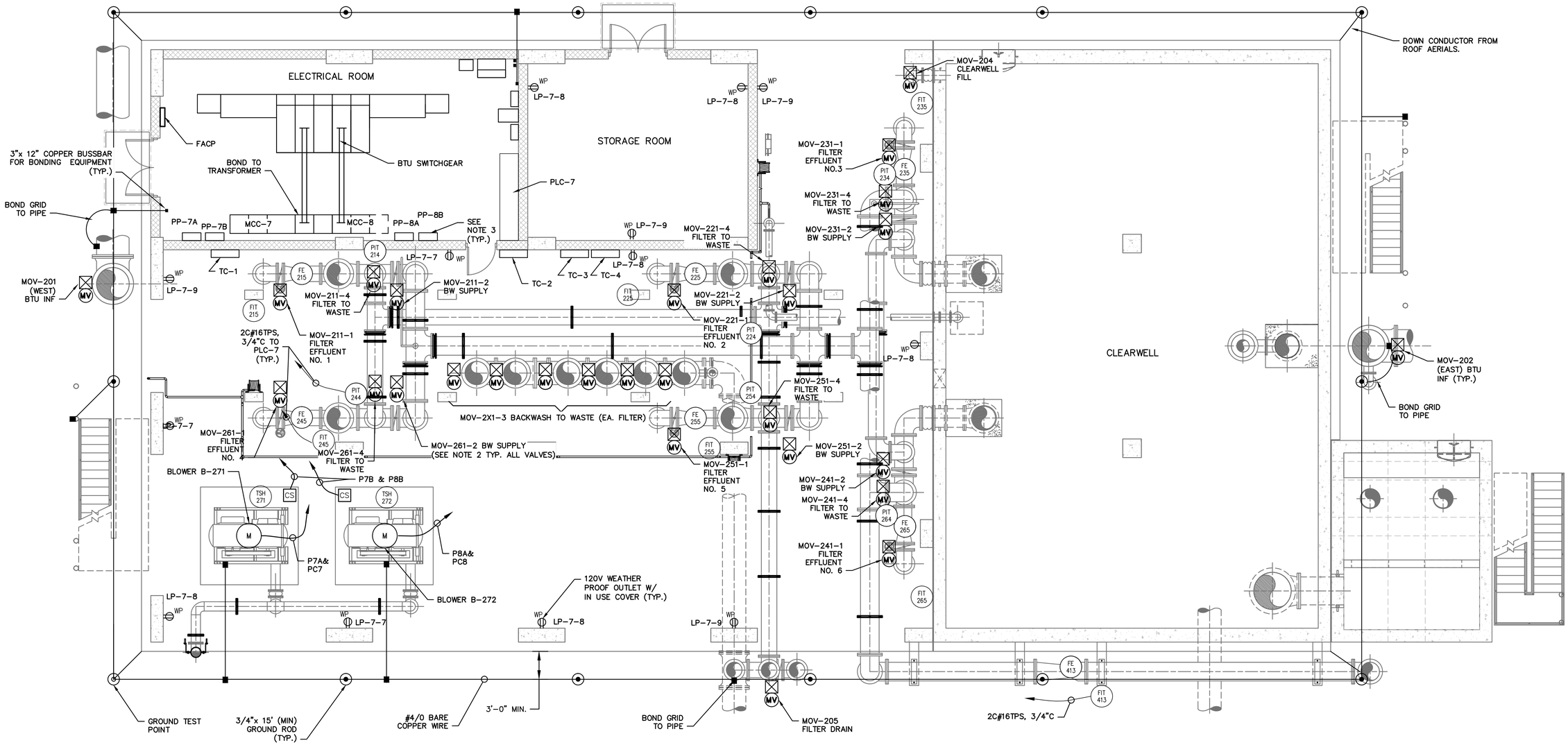

NORTH

BUILDING ELECTRICAL PLAN (EL. 73.83)

3/16"=1'-0"

0 4 12

SCALE: 3/16" = 1'-0"

REV.NO.	DESCRIPTIONS	DATE
	REVISIONS	

SEAL

AUDREY A. HAUDRICOURT LICENSE No 66861 STATE OF FLORIDA PROFESSIONAL ENGINEER

SEAL

McKIM&CREED
1365 Hamlet Avenue
Clearwater, Florida 33756
Phone: (727)442-7196, Fax: (727)461-3827
CA Lic. No. 29588
www.mckimcreed.com

Manatee County FLORIDA

MANATEE COUNTY
WTP BIOLOGICAL TREATMENT UNIT

BUILDING POWER PLAN,
FIRST FLOOR (EL. 73.83)

DATE:	OCTOBER 2015
MCE PROJ. #	1024-0167
DRAWN	AAH
DESIGNED	AAH
CHECKED	JSL
PROJ. MGR.	PJL

SCALE
HORIZONTAL: AS SHOWN
VERTICAL: NA

DRAWING NUMBER
E-2.1

STATUS: ISSUE FOR BID
REVISION

s:\1024\0167\90-drawings\Electrical\E-2.1 1024\0167 Building Power Plan FI.dwg, 9/30/2015 11:22:54 AM, Brian Naugh1

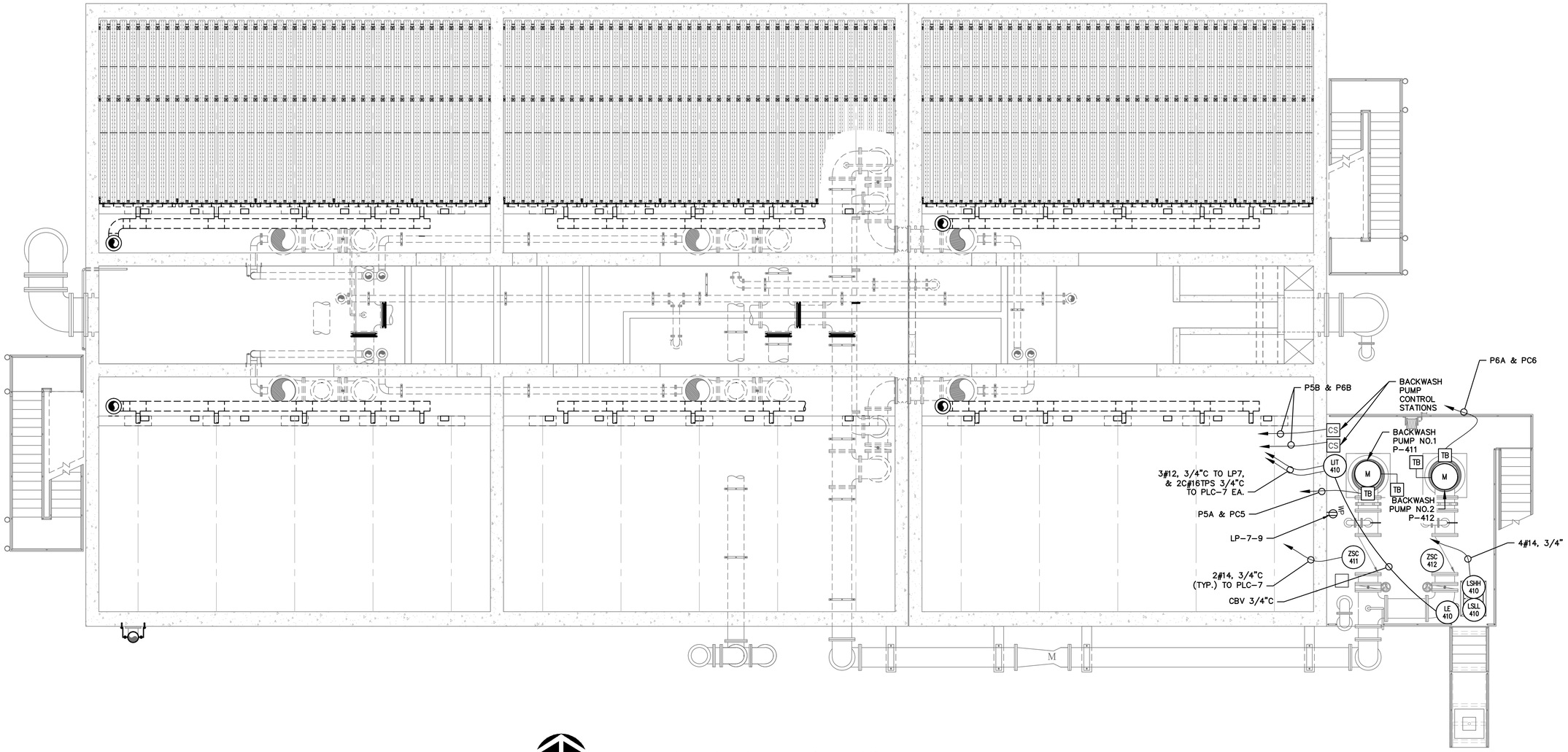

NORTH

BUILDING ELECTRICAL PLAN (EL. 87.33)
3/16"=1'-0"

0 4 12
SCALE: 3/16" = 1'-0"

REV.NO.	DESCRIPTIONS	DATE

REVISIONS

SEAL

AUBREY A. HAUDRICOURT
LICENSE
No 66861
STATE OF FLORIDA
PROFESSIONAL ENGINEER

SEAL

McKIM&CREED
1365 Hamlet Avenue
Clearwater, Florida 33756
Phone: (727)442-7196, Fax: (727)461-3827
CA Lic. No. 29588
www.mckimcreed.com

Manatee County FLORIDA

MANATEE COUNTY
WTP BIOLOGICAL TREATMENT UNIT

BUILDING POWER PLAN,
SECOND FLOOR (EL. 87.33)

DATE:	OCTOBER 2015
MCE PROJ. #	1024-0167
DRAWN	AAH
DESIGNED	AAH
CHECKED	JSL
PROJ. MGR.	PJL

SCALE
HORIZONTAL: AS SHOWN
VERTICAL: NA

DRAWING NUMBER
E-2.2

STATUS: ISSUE FOR BID
REVISION

A:\1024\0167\AB-drawings\Electrical\E-2.2 1024\0167 Building Power Plan F2.dwg, 9/30/2015 11:23:13 AM, Brian Naugle

3RD FL. ELECTRICAL VALVE CHART (REFER TO PANEL SCHEDULE FOR CKT. #)		
VALVE NAME	POWER PP-X/ SIGNAL WIRE (PLC-7)	REMARKS
AIR SCOUR SUPPLY MOV 2X1-5	3#12, 1#12G 3/4"C, 12#14 3/4"C	OPEN/CLOSE
AIR UNLOADING MOV-273	3#12, 1#12G 3/4"C, 12#14, 3/4"C	OPEN/CLOSE
SLIDE GATES SLG-2X2	3#12, 1#12G 3/4"C, 12#14, 3/4"C	OPEN/CLOSE

NOTES:

1. REFER TO INTERCONNECT DIAGRAM SHT.E-3.0 FOR INFORMATION ON INSTRUMENTATION AND ACTUATOR CONDUIT AND WIRE.

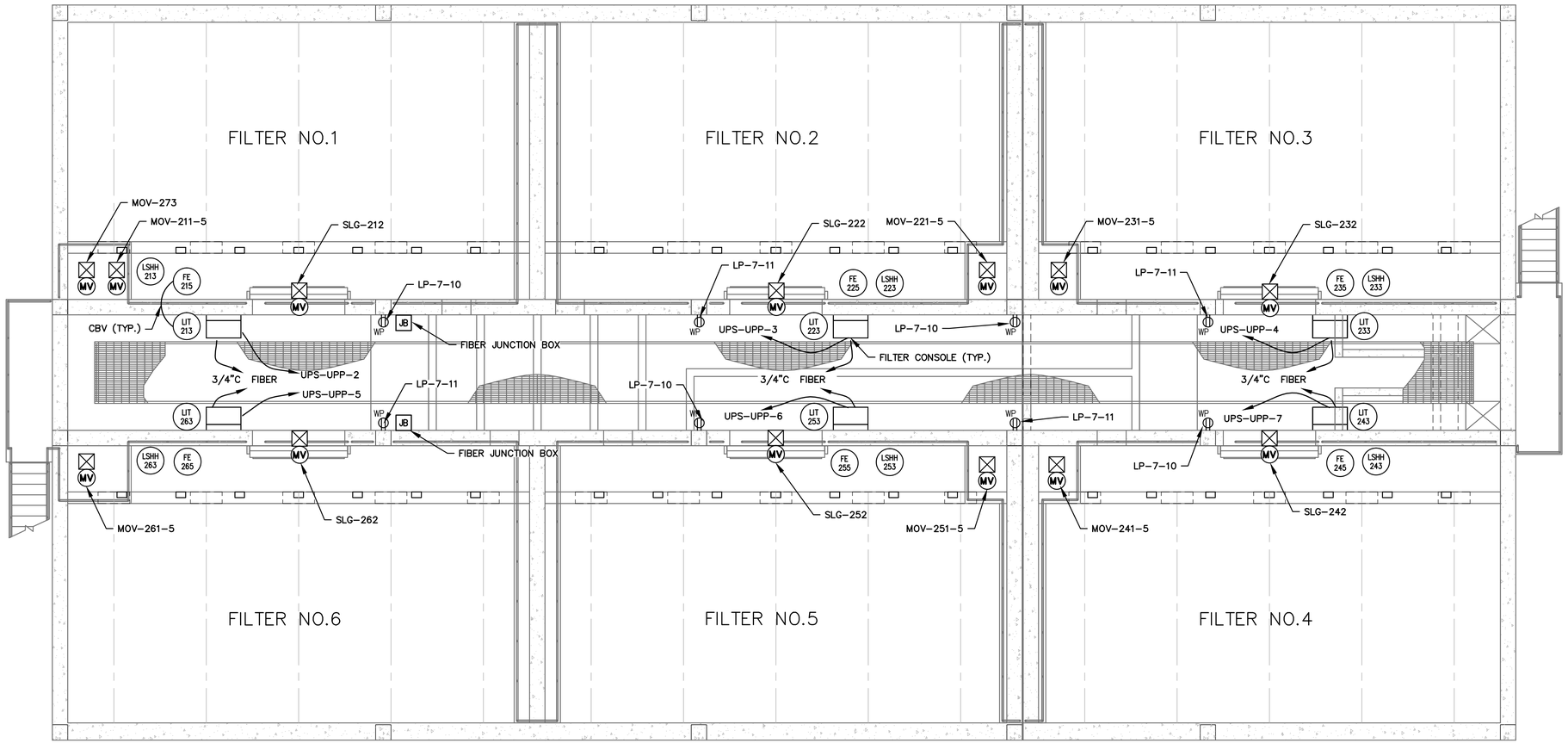

NORTH

BUILDING ELECTRICAL PLAN (EL. 91.33)
3/16"=1'-0"

0 4 12
SCALE: 3/16" = 1'-0"

REV.NO.	DESCRIPTIONS	DATE
	REVISIONS	

SEAL

SEAL

McKIM&CREED
1365 Hamlet Avenue
Clearwater, Florida 33756
Phone: (727)442-7196, Fax: (727)461-3827
CA Lic. No. 29588
www.mckimcreed.com

Manatee County FLORIDA

MANATEE COUNTY
WTP BIOLOGICAL TREATMENT UNIT

BUILDING POWER PLAN,
THIRD FLOOR (EL. 91.33)

DATE:	OCTOBER 2015
MCE PROJ. #	1024-0167
DRAWN	AAH
DESIGNED	AAH
CHECKED	JSL
PROJ. MGR.	PJL

SCALE
HORIZONTAL: AS SHOWN
VERTICAL: NA

DRAWING NUMBER
E-2.3

STATUS: ISSUE FOR BID
REVISION

I:\1024\0167\05-drawings\Electrical\E-2.3_1024167 Building Power Plan FT.dwg, 9/30/2015 11:25:24 AM, Brian Naugh1

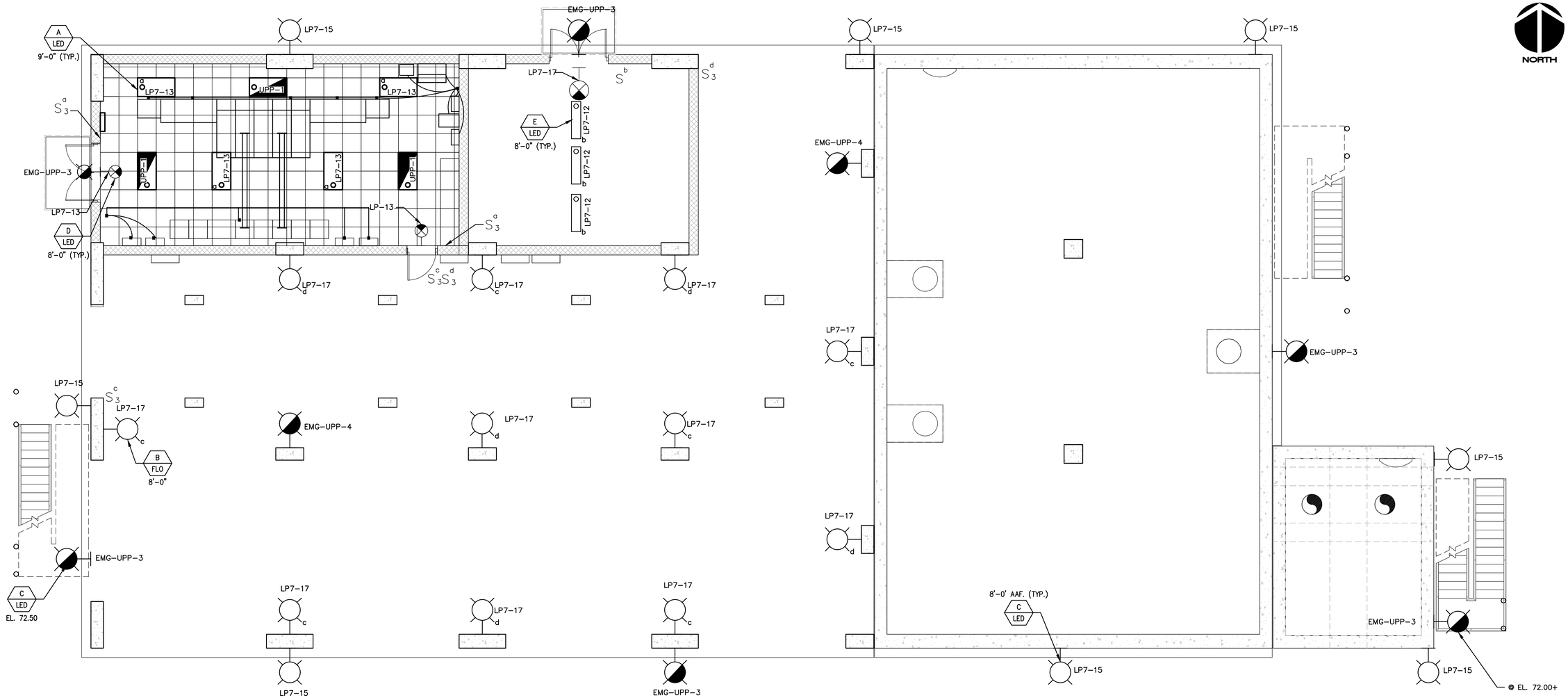

BUILDING LIGHTING PLAN EL. 73.83

3/16"=1'-0"

LIGHTING SCHEDULE

LETTER	DESCRIPTION	LAMPS	REMARKS
A	2'X4' RECESSED HIGH PERFORMANCE TRANSMITTANCE DIFFUSER, ONE PIECE ROLLED CONSTRUCTION, CONCAVE RIBBED REFRACTOR, HINGED DOOR OPTICAL ASSEMBLY FOR INSTALLATION IN T-BAR SYSTEM. SUITABLE FOR DAMP LOCATIONS. POWDER-PAINT WHITE FINISH	LED L90/60,000HRS, 4000K, 120V. 25W INPUT	LITHONIA LIGHTING SERIES ALL OR APPROVED EQUAL
B	DIECAST ALUMINUM WALL MOUNT WATER PROOF OUTDOOR FIXTURE, W/ ONE PIECE POLYCARBONATE LENS, FULLY GASKETED. DARK BRONZE FINISH.	30-LED, L90/100,000HRS, 700mA, 67W. 4000K, 120V	LITHONIA LIGHTING MOD. TWP OR APPROVED EQUAL
C	DIECAST ALUMINUM WALL MOUNTED FIXTURE W/ DEBIS SCREEN ALLOWING FOR AIR FLOW. COMPLETELY SEAL WEATHERPROOF HOUSING. ACRYLIC LENS TM2 DISTRIBUTION. DARK BRONZE FINISH. PHOTOELECTRIC CELL, BUTTON TYPE.	30-LED, L90/100,000HRS, 700MA, 67W. 4000K, 120V	LITHONIA LIGHTING MOD. CSXW LED OR APPROVED EQUAL
C2	DIECAST ALUMINUM WALL MOUNTED FIXTURE W/ DEBIS SCREEN ALLOWING FOR AIR FLOW. COMPLETELY SEAL WEATHERPROOF HOUSING. ACRYLIC LENS TM2 DISTRIBUTION. DARK BRONZE FINISH.	30-LED, L90/100,000HRS, 1000MA, 104W. 4000K, 120V	LITHONIA LIGHTING MOD. CSXW LED OR APPROVED EQUAL
D	REAR MOUNT EMERGENCY EXIT SIGN. INJECTION-MOLDED, FLAME-RETARDANT, HIGH-IMPACT, THERMOPLASTIC HOUSING. BATTERY BACKUP. TEST SWITCH FOR MANUAL ACTIVATION OF 30-SECOND DIAGNOSTIC TESTING. SELF DIAGNOSTIC TESTING EVERY 30 DAYS.	RED LENS <1W, 120V	LITHONIA LIGHTING MOD. LQM OR APPROVED EQUAL
E	4' PENDANT SUSPENDED LED LUMINAIRE, SUITABLE FOR WET, DAMP AND/OR COLD LOCATIONS. ONE-PIECE FIBERGLASS HOUSING, GASKETED, FROSTED SPREAD DISTRIBUTION LENS.	LED L80/60,000HRS, 39W, 350mA. 4100K	LITHONIA LIGHTING MOD. FEM LED OR APPROVED EQUAL.
F	LED OUTDOOR POLE MOUNTED AREA LIGHT. EPA 1.2sqft.fIXTURE TO MATCH EXISTING SHAPE AND COLOR. TYPE 3 DISTRIBUTION. PROVIDE POLE AND BASE TO MATCH EXISTING. 140MPH WIND LOAD.	LED BULBS L90/>80,000HRS. 109WATTS, 530mA, 3000K	LITHONIA LIGHTING MOD. KADT LED OR APPROVED EQUAL.

REV.NO.	DESCRIPTIONS	DATE

REVISIONS

SEAL

LAUBREY A. HAUDRICOURT
LICENSE
No 66861
STATE OF FLORIDA
PROFESSIONAL ENGINEER

SEAL

McKIM&CREED
1365 Hamlet Avenue
Clearwater, Florida 33756
Phone: (727)442-7196, Fax: (727)461-3827
CA Lic. No. 29588
www.mckimcreed.com

Manatee County FLORIDA

MANATEE COUNTY
WTP BIOLOGICAL TREATMENT UNIT

BUILDING LIGHTING PLAN,
FIRST FLOOR (EL. 73.83)

DATE:	OCTOBER 2015
MCE PROJ. #	1024-0167
DRAWN	AAH
DESIGNED	AAH
CHECKED	JSL
PROJ. MGR.	PJL

SCALE
HORIZONTAL: AS SHOWN
VERTICAL: NA

DRAWING NUMBER
E-2.4

STATUS: ISSUE FOR BID
REVISION

a:\1024\0167\05-drawings\Electrical\E-2.4 1024\0167 Building Lighting Plan FI.dwg, 9/30/2015 11:25:34 AM, Brian Naught

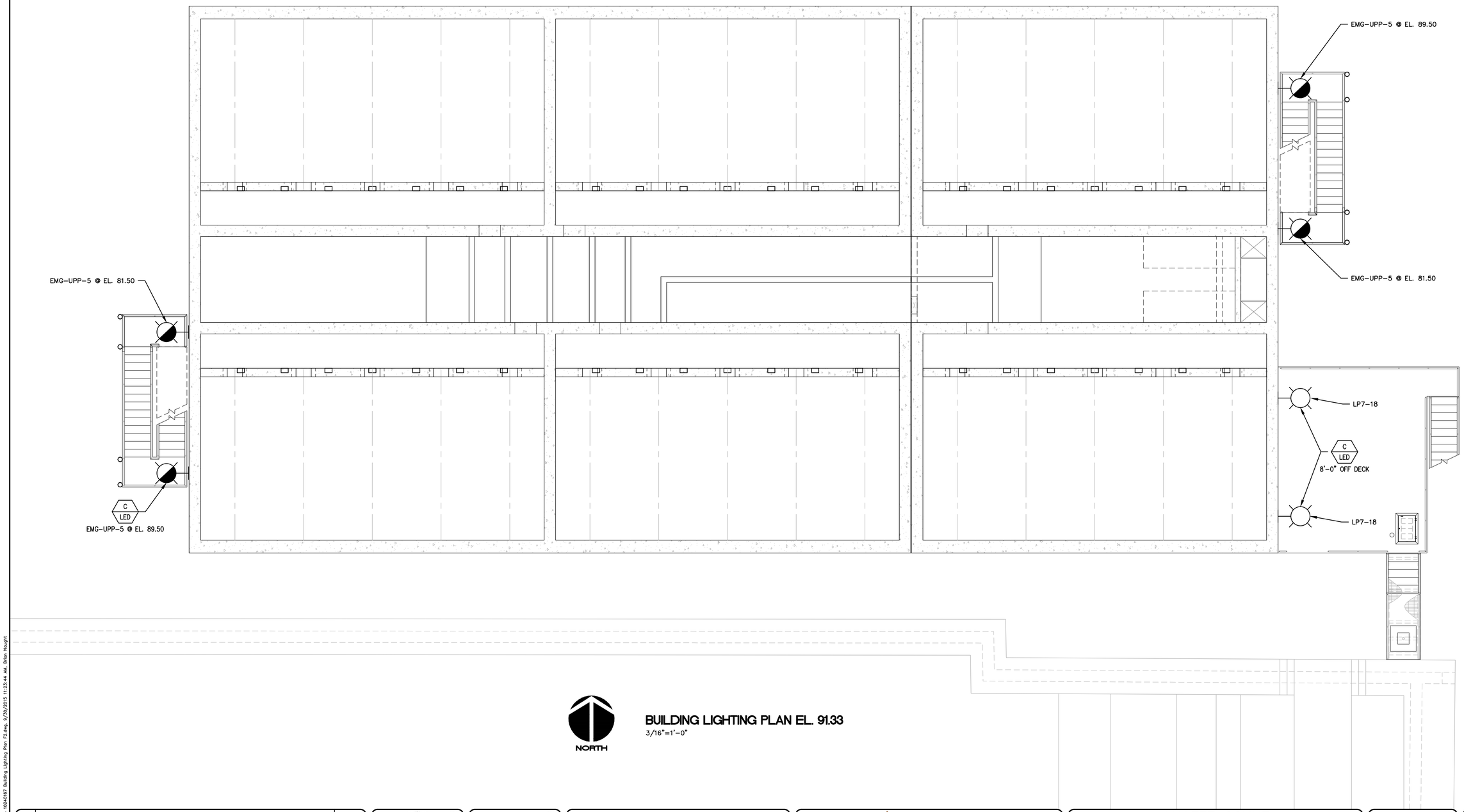

BUILDING LIGHTING PLAN EL. 91.33

3/16"=1'-0"

REV.NO.	DESCRIPTIONS	DATE

REVISIONS

SEAL

SEAL

McKIM&CREED
1365 Hamlet Avenue
Clearwater, Florida 33756
Phone: (727)442-7196, Fax: (727)461-3827
CA Lic. No. 29588
www.mckimcreed.com

Manatee County FLORIDA

MANATEE COUNTY
WTP BIOLOGICAL TREATMENT UNIT

BUILDING LIGHTING PLAN,
SECOND FLOOR (EL. 91.33)

DATE:	OCTOBER 2015
MCE PROJ. #	1024-0167
DRAWN	AAH
DESIGNED	AAH
CHECKED	JSL
PROJ. MGR.	PJL

SCALE
HORIZONTAL: AS SHOWN
VERTICAL: NA

DRAWING NUMBER
E-2.5

STATUS: ISSUE FOR BID
REVISION

E:\10GA\0167\00-drawings\Electrical\E-2.5 10240167 Building Lighting Plan T2.dwg, 9/30/2015 11:23:44 AM, Brian Naught

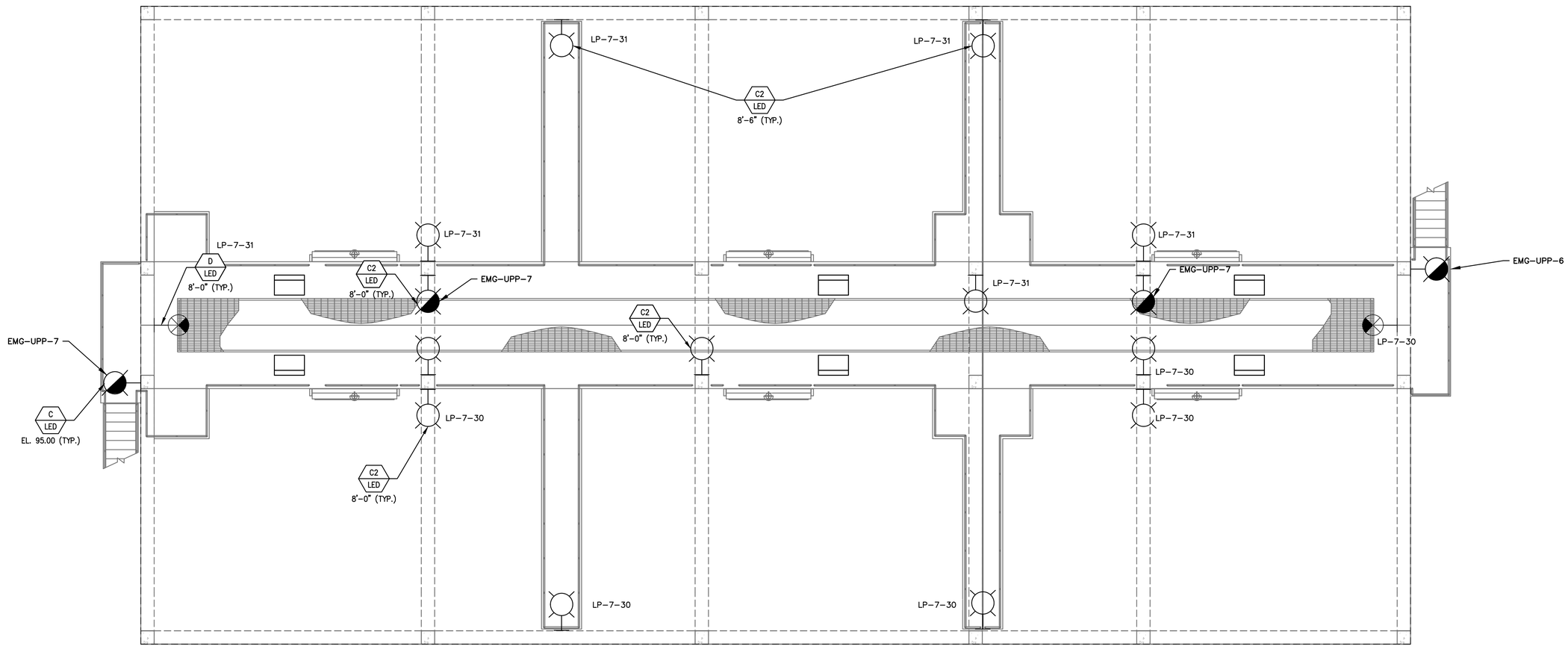

NORTH

BUILDING LIGHTING PLAN EL. 100.33

3/16"=1'-0"

REV.NO.	DESCRIPTIONS	DATE
	REVISIONS	

SEAL

KAUBREL A. HAUDRICOURT
LICENSE
No 66861
STATE OF FLORIDA
PROFESSIONAL ENGINEER

SEAL

McKIM&CREED
1365 Hamlet Avenue
Clearwater, Florida 33756
Phone: (727)442-7196, Fax: (727)461-3827
CA Lic. No. 29588
www.mckimcreed.com

Manatee County FLORIDA

MANATEE COUNTY
WTP BIOLOGICAL TREATMENT UNIT

BUILDING LIGHTING PLAN,
THIRD FLOOR (EL. 100.33)

DATE:	OCTOBER 2015
MCE PROJ. #	1024-0167
DRAWN	AAH
DESIGNED	AAH
CHECKED	JSL
PROJ. MGR.	PJL

SCALE
HORIZONTAL: AS SHOWN
VERTICAL: NA

DRAWING NUMBER
E-2.6

STATUS: REVISION
ISSUE FOR BID

e:\1024\0167\BD-drawings\Electrical\E-2.6 1024\0167 Building Lighting Plan F3.dwg, 9/30/2015 11:23:54 AM, Brian Naught

NOTES:

1. PROVIDE LIGHTNING PROTECTION SYSTEM PER SPECIFICATIONS
2. BOND LIGHTNING PROTECTION SYSTEM TO BUILDING GROUND GRID.
3. INSTALL AERIAL LEADS AND DOWN LEADS IN PVC CONDUIT.

NORTH

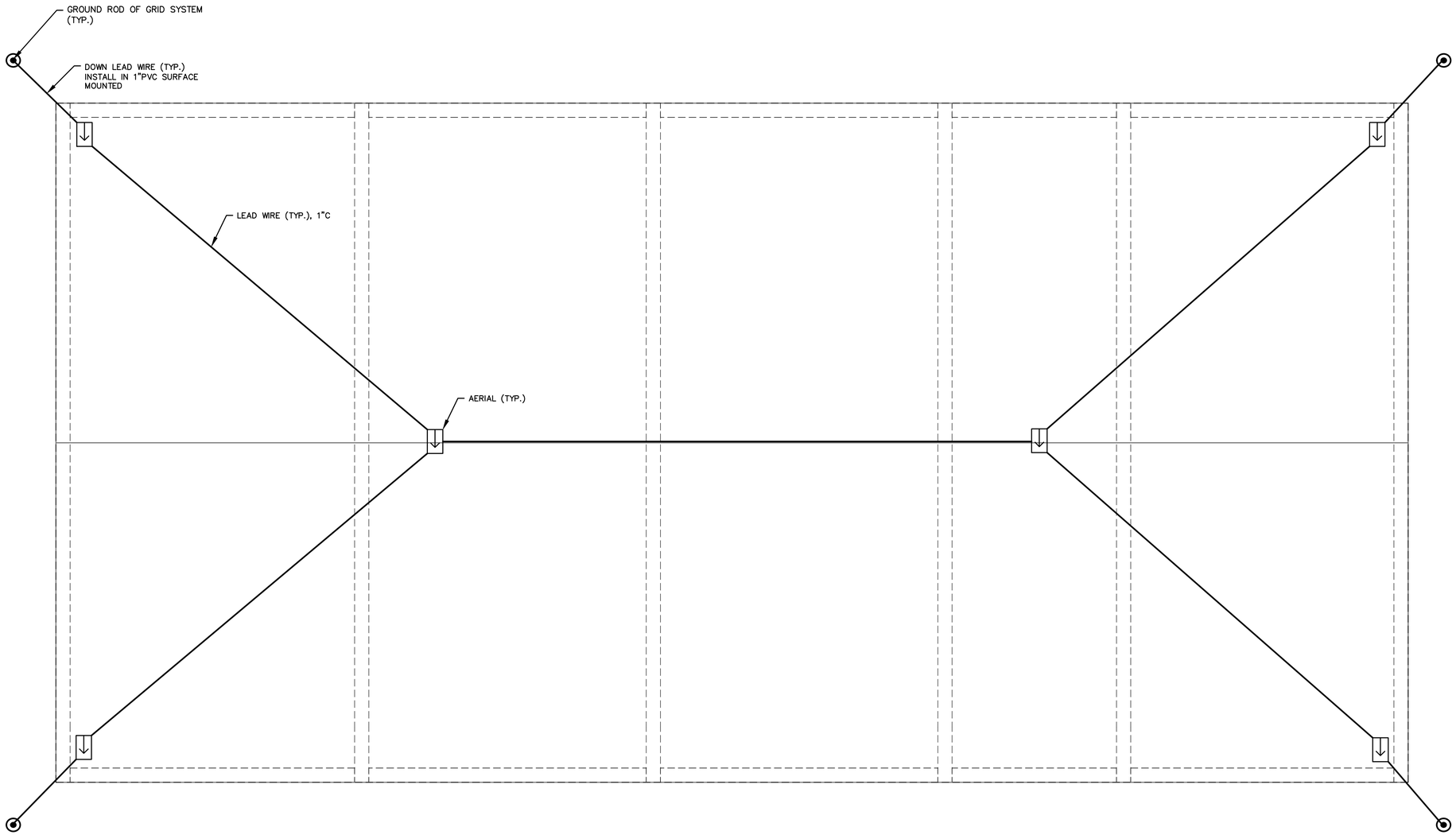

LIGHTNING SYSTEM PLAN

0 4 12

SCALE: 3/16" = 1'-0"

REV.NO.	DESCRIPTIONS	DATE
	REVISIONS	

SEAL

AUBREY A. HAUDRICOURT LICENSE No 66861 STATE OF FLORIDA PROFESSIONAL ENGINEER

SEAL

McKIM&CREED
1365 Hamlet Avenue
Clearwater, Florida 33756
Phone: (727)442-7196, Fax: (727)461-3827
CA Lic. No. 29588
www.mckimcreed.com

Manatee County FLORIDA

MANATEE COUNTY
WTP BIOLOGICAL TREATMENT UNIT

LIGHTNING PLAN,
ROOF (EL. 105.33)

DATE:	OCTOBER 2015
MCE PROJ. #	1024-0167
DRAWN	AAH
DESIGNED	AAH
CHECKED	JSL
PROJ. MGR.	PJL

SCALE
HORIZONTAL: AS SHOWN
VERTICAL: NA

DRAWING NUMBER
E-2.7

STATUS: ISSUE FOR BID
REVISION

e:\1024\0167\BD-drawings\Electrical\E-2.7 1024-0167 Lightning Plan EL. (104.60).dwg, 9/30/2015 11:24:02 AM, Brian Naugh1

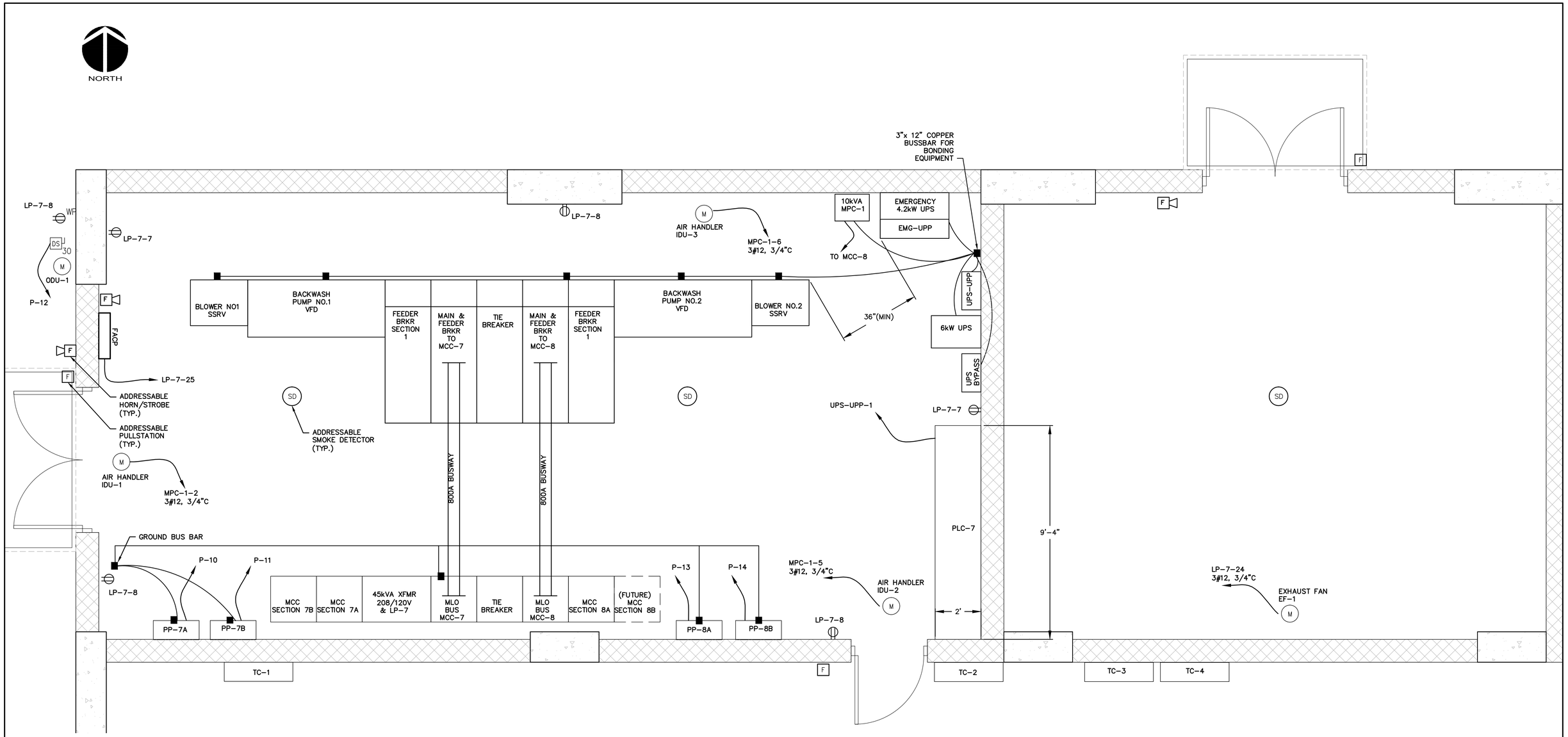

FIRE PANEL RISER DIAGRAM

NTS.

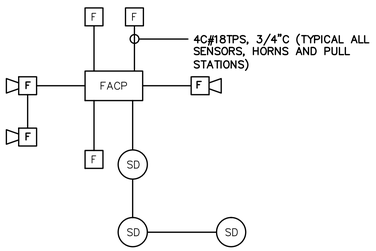

FIRE RISER NOTES:

1. PROVIDE AND INSTALL FIRE PANEL SYSTEM BY NFPA CERTIFIED FIRE SYSTEMS INSTALLER.
2. PROVIDE COMPLETE ADDRESSABLE SYSTEM.
3. REFER TO SPECIFICATION FOR MORE INFORMATION.

ELECTRICAL ROOM (EL. 73.33)

3/16"=1'-0"

REV.NO.	DESCRIPTIONS	DATE

REVISIONS

SEAL

AUBREY A. HAUDER JR. LICENSE No 66861 STATE OF FLORIDA PROFESSIONAL ENGINEER

SEAL

McKIM&CREED
1365 Hamlet Avenue
Clearwater, Florida 33756
Phone: (727)442-7196, Fax: (727)461-3827
CA Lic. No. 29588
www.mckimcreed.com

Manatee County FLORIDA

MANATEE COUNTY
WTP BIOLOGICAL TREATMENT UNIT

ELECTRICAL ROOM,
FIRST FLOOR (EL.73.85)

DATE:	OCTOBER 2015
MCE PROJ. #	1024-0167
DRAWN	AAH
DESIGNED	AAH
CHECKED	JSL
PROJ. MGR.	PJL

SCALE
HORIZONTAL: AS SHOWN
VERTICAL: NA

DRAWING NUMBER
E-2.8

STATUS: ISSUE FOR BID
REVISION

e:\1024\0167\00-drawings\Electrical\E-2.8 1024\0167 Electrical Room.dwg, 9/30/2015 11:24:11 AM, Brian Naugle

NOTES:

1. REFER TO I-SHEETS FOR MORE INFORMATION
2. PROVIDE TERMINAL BLOCKS IN ALL CABINETS WITH 25% SPARE.
3. PROVIDE 20% SPARE WIRE BETWEEN TERMINAL CABINETS AND PLC7. LAND SPARES ON TERMINAL BLOCKS IN BOTH CABINETS
4. REFER TO SITE PLANS FOR CONTROL PULL BOX (CPB) LOCATIONS.
5. PROVIDE GROUND WIRES AS REQUIRED FOR ALL INSTRUMENTATION,

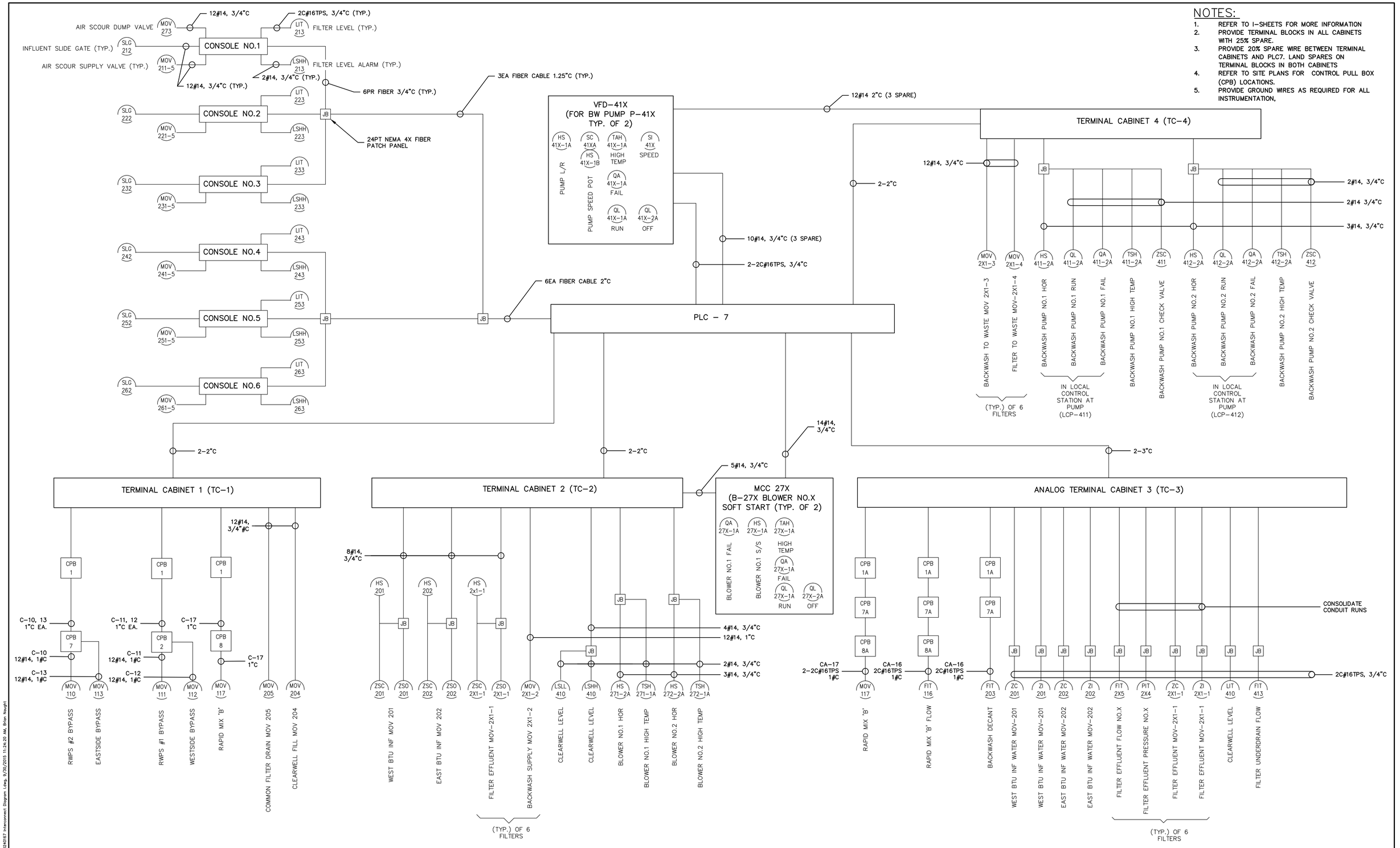

REV.NO.	DESCRIPTIONS	DATE

REVISIONS

SEAL

AUBREY A. HAUDRY LICENSED PROFESSIONAL ENGINEER No 66861 STATE OF FLORIDA

SEAL

McKIM&CREED
1365 Hamlet Avenue
Clearwater, Florida 33756
Phone: (727)442-7196, Fax: (727)461-3827
CA Lic. No. 29588
www.mckimcreed.com

Manatee County FLORIDA

MANATEE COUNTY
WTP BIOLOGICAL TREATMENT UNIT

INTERCONNECT DIAGRAM I

DATE:	OCTOBER 2015
MCE PROJ. #	1024-0167
DRAWN	AAH
DESIGNED	AAH
CHECKED	JSL
PROJ. MGR.	PJL

SCALE
HORIZONTAL: AS SHOWN
VERTICAL: NA

DRAWING NUMBER
E-3.0

STATUS: ISSUE FOR BID
REVISION

e:\1024\0167\90-drawings\Electrical\E-3.0 1024167 Interconnect Diagram I.dwg, 9/30/2015 11:24:20 AM, Brian Naught

NOTES:

1. REFER TO I-SHEETS FOR MORE INFORMATION
2. PROVIDE TERMINAL BLOCKS IN ALL CABINETS WITH 25% SPARE.
3. PROVIDE 20% SPARE WIRE BETWEEN TERMINAL CABINETS AND PLC7. LAND SPARES ON TERMINAL BLOCKS IN BOTH CABINETS
4. REFER TO SITE PLANS FOR CONTROL PULL BOX (CPB) LOCATIONS.
5. PROVIDE GROUND WIRES AS REQUIRED FOR ALL INSTRUMENTATION,

NORTH

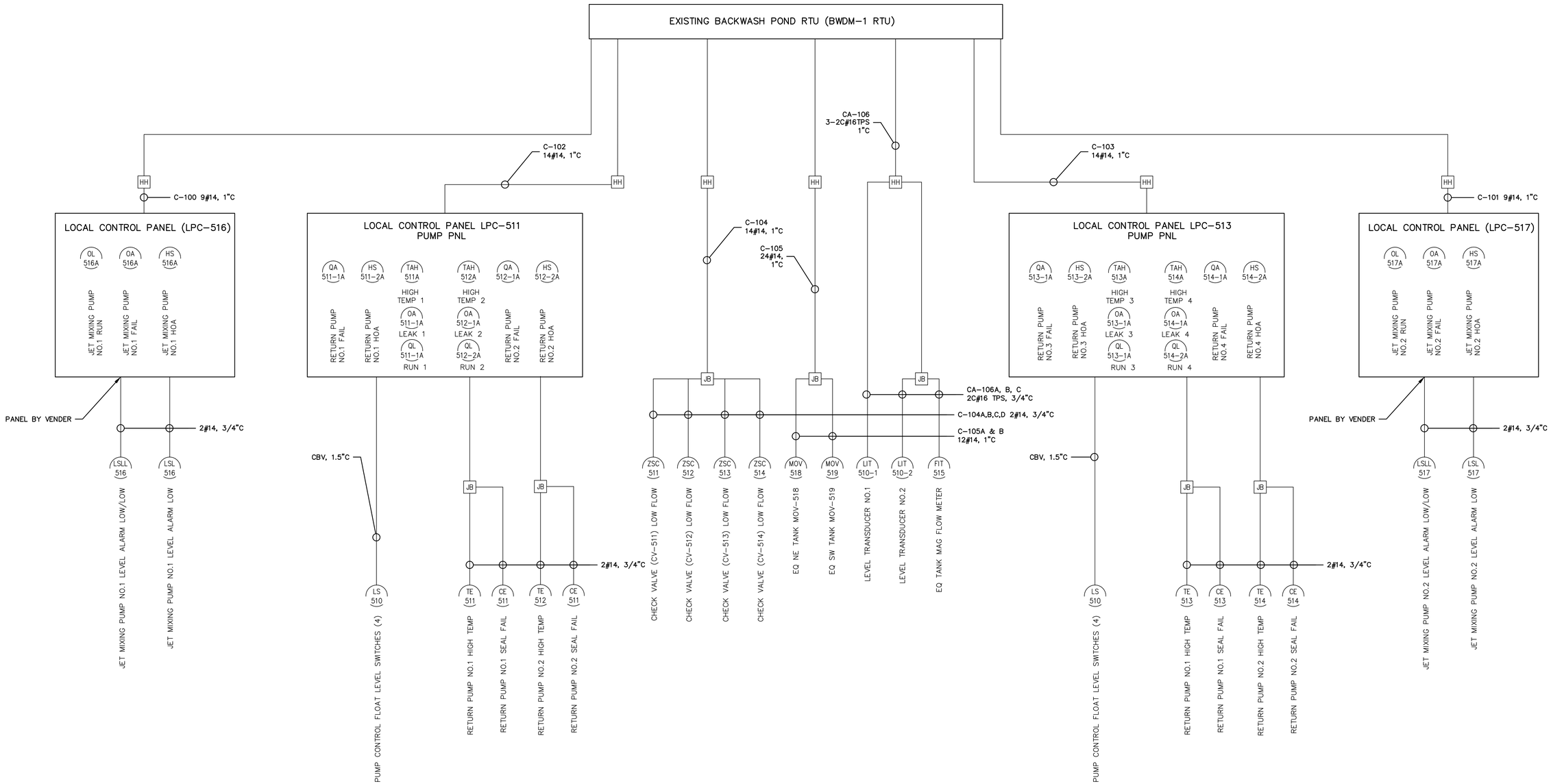

REV.NO.	DESCRIPTIONS	DATE

REVISIONS

SEAL

SEAL

McKIM&CREED
1365 Hamlet Avenue
Clearwater, Florida 33756
Phone: (727)442-7196, Fax: (727)461-3827
CA Lic. No. 29588
www.mckimcreed.com

Manatee County FLORIDA

MANATEE COUNTY WTP BIOLOGICAL TREATMENT UNIT

INTERCONNECT DIAGRAM II

DATE:	OCTOBER 2015
MCE PROJ. #	1024-0167
DRAWN	LLS
DESIGNED	AAH
CHECKED	JSL
PROJ. MGR.	PJL

SCALE
HORIZONTAL: AS SHOWN
VERTICAL: NA

DRAWING NUMBER
E-3.1

STATUS: ISSUE FOR BID
REVISION

K:\1024\0167\BS-drawings\Electrical\E-3.1 1024\0167 Interconnect Diagram II.dwg, 9/30/2015 11:24:31 AM, Brian Naugle

CKT NO.	TRIP AMPS	DESCRIPTION OF LOAD	LOAD KVA	AMPS	POLES	KVA PER PHASE A	KVA PER PHASE B	KVA PER PHASE C	POLES	AMPS	LOAD KVA	DESCRIPTION OF LOAD	TRIP AMPS	CKT NO.
1	30	EMG-UPS	2.1	20.2	2	2.1			1			SPARE	20	2
			2.1				5.1		2	28.8	3	UPS-UPP	40	4
5	20	SPARE			1			3.0			3			
7	20 GFI	RECEPTICALS 1st FLOOR PROCESS	1.8	15.0	1	3.6			1	15.0	1.8	RECEPTICALS 1st FLOOR PROCESS	20 GFI	8
9	20 GFI	RECEPTICALS 1 & 2 FLOOR PROCESS	1.8	15.0	1		3.6		1	15.0	1.8	RECEPTICALS 3RD FLOOR PROCESS	20 GFI	10
11	20 GFI	RECEPTICALS 3RD FLOOR PROCESS	1.8	15.0	1			1.9	1	0.7	0.08	LIGHTING STORAGE RM.	20	12
13	20	LIGHTING ELEC RM.	0.4	3.3	1	0.4			1	0.0	0	LIGHTING 1ST. FL. PROCESS EL. 73.85	20	14
15	20	LIGHTING EXT. EL. 73.83	0.832	6.9	1		0.8		1	0.0	0	SPARE	20	16
17	20	LIGHTING 1ST. FL. PROCESS EL. 73.83	1.25	10.4	1			1.5	1	1.7	0.208	LIGHTING EXT. EL. 91.33	20	18
19	20	SPARE	0	0.0	1	0.1			1	0.5	0.06	FIT-203	20	20
21	20	SPARE	0	0.0	1		0.0		1	0.0	0	SPARE	20	22
23	20	SPARE	0	0.0	1			0.5	1	4.2	0.5	EF-1	20	24
25	20	FIRE ALARM CONTROL PANEL (FACP)	0.5	4.2	1	0.5			1			SPARE	20	26
27	20	SPARE	0	0.0	2		0.0		1			SPARE	20	28
								0.5	1	4.2	0.5	LIGHTING EL. 100.33	20	30
31	20	LIGHTING EL. 100.33	0.5	4.2	1	0.5			1					32
33					1		0.0		1					34
35					1			0.0	1					36
37					1	0.0			1					38
39					1		0.0		1					40
41					1			0.0	1					42
			TOTAL KVA			7.2	9.5	7.3						
			GRAND CONNECTED TOTAL KVA			24.0								

PANEL **LP-7**
LOCATION BIO FILTER E-ROOM
BUILDING
NOTES:

SERVICE CHARACTERISTICS
VOLTS: 208Y/120
PHASE: 3
WIRE: 4
10k MIN AIC SYMM, FULLY RATED ASSEMBLY
A MLO
150 A MCB

PANELBOARD SCHEDULE LP-7

CKT NO.	TRIP AMPS	DESCRIPTION OF LOAD	LOAD KVA	AMPS	POLES	KVA PER PHASE A	KVA PER PHASE B	POLES	AMPS	LOAD KVA	DESCRIPTION OF LOAD	TRIP AMPS	CKT NO.
1	20	PLC	0.592	4.9	1	1.2		1	5.3	0.63	BTU CONTROL CONSOLE RIO-1	20	2
3	20	BTU CONTROL CONSOLE RIO-2	0.63	5.3	1		1.3	1	5.3	0.63	BTU CONTROL CONSOLE RIO-3	20	4
5	20	BTU CONTROL CONSOLE RIO-4	0.63	5.3	1	1.3		1	5.3	0.63	BTU CONTROL CONSOLE RIO-5	20	6
7	20	BTU CONTROL CONSOLE RIO-6	0.63	5.3	1		0.6	1				20	8
9	20				1	0.0		1				20	10
11	20				1		0.0	1				20	12
13	20				1	0.0		1				20	14
15	20				1		0.0	1				20	16
17	20				1	0.0		1				20	18
			TOTAL KVA			2.5	1.9						
			GRAND CONNECTED TOTAL KVA			4.4							

PANEL **UPS-UPP**
LOCATION BIO FILTER E-ROOM
BUILDING
NOTES: 6kVA

SERVICE CHARACTERISTICS
VOLTS: 240/120
PHASE: 1
WIRE: 3
10k MIN AIC SYMM, FULLY RATED ASSEMBLY
A MLO
40 A MCB

PANELBOARD SCHEDULE UPS-UPP

CKT NO.	TRIP AMPS	DESCRIPTION OF LOAD	LOAD KVA	AMPS	POLES	KVA PER PHASE A	KVA PER PHASE B	POLES	AMPS	LOAD KVA	DESCRIPTION OF LOAD	TRIP AMPS	CKT NO.
1	20	CONTROL PANEL NO. 1 BW POND	1.2	10.0	1	1.8		1	5.0	0.6	EQUALIZATION TANK MAGMETER FIT-515	20	2
3	20	SUMP PUMP (1) BW POND	0.4	3.3	1		1.0	2	5.0	0.6	LIGHTING BW POND	20	4
5	20	FLOWMETER TRANSMITTER BW POND	0.1	0.8	1	0.7				0.6			
7	20	RECEPTICALS EQ TANK	0.18	1.5	1		0.6	1	3.8	0.45	LIGHTING EQUALIZATION TANK AREA	20	8
9					1	0.0		1					10
			TOTAL KVA			2.5	1.6						
			GRAND CONNECTED TOTAL KVA			4.1							

PANEL **MPZ**
LOCATION BACKWASH POND
BUILDING
NOTES:

SERVICE CHARACTERISTICS
VOLTS: 240/120
PHASE: 1
WIRE: 3
10k MIN AIC SYMM, FULLY RATED ASSEMBLY
A MLO
40 A MCB

PANELBOARD SCHEDULE MPZ (EXISTING)

CKT NO	TRIP AMPS	DESCRIPTION OF LOAD	LOAD KVA	AMPS	POLES	KVA PER PHASE A	KVA PER PHASE B	POLES	AMPS	LOAD KVA	DESCRIPTION OF LOAD	TRIP AMPS	CKT NO
1	20	EMERGENCY LIGHTING E-ROOM	0.75	6.3	1	1.0		1	2.1	0.25	EMERGENCY LIGHTING STORAGE ROOM	20	2
3	20	EMERGENCY LIGHTING EXT EL 73.83	0.624	5.2	1		0.8	1	1.7	0.208	EMERGENCY LIGHTING PROCESS EL 73.83	20	4
5	20	EMERGENCY LIGHTING EXT EL.91.33	0.416	3.5	1	0.6		1	1.7	0.208	EMERGENCY LIGHTING EXT EL 100.33	20	6
7	20	EMERGENCY LIGHTING PROCESS EL 100.33	0.208	1.7	1		0.2	1				20	8
9	20				1	0.0		1				20	10
11	20				1		0.0	1				20	12
13	20				1	0.0		1				20	14
15	20				1		0.0	1				20	16
17	20				1	0.0		1				20	18
			TOTAL KVA			1.6	1.0						
			GRAND CONNECTED TOTAL KVA			2.7							

PANEL **EMG-UPP**
LOCATION BIO FILTER E-ROOM
BUILDING
NOTES: 4.2kVA W/ NORMALLY OFF BUS

SERVICE CHARACTERISTICS
VOLTS: 240/120
PHASE: 1
WIRE: 3
10k MIN AIC SYMM, FULLY RATED ASSEMBLY
A MLO
30 A MCB

PANELBOARD SCHEDULE EMG-UPP

CKT NO.	TRIP AMPS	DESCRIPTION OF LOAD	LOAD KVA	AMPS	POLES	KVA PER PHASE A	KVA PER PHASE B	POLES	AMPS	LOAD KVA	DESCRIPTION OF LOAD	TRIP AMPS	CKT NO.
1	40	GRINDER PUMP STATION #2	3	25.0	2	3.4		2	3.3	0.4	AIR HANDLER IDU-1	20	2
			3				3.4			0.4			
5	20	AIR HANDLER IDU-2	0.4	3.3	2	0.8		2	3.3	0.4	AIR HANDLER IDU-3	20	6
			0.4				0.8			0.4			
9	20				1	0.0		1				20	10
11	20				1		0.0	1				20	12
13	20				1	0.0		1				20	14
15	20				1		0.0	1				20	16
17	20				1	0.0		1				20	18
			TOTAL KVA			4.2	4.2						
			GRAND CONNECTED TOTAL KVA			8.4							

PANEL **MPC-1**
LOCATION BTU E-ROOM
BUILDING
NOTES:

SERVICE CHARACTERISTICS
VOLTS: 240/120
PHASE: 1
WIRE: 3
10k MIN AIC SYMM, FULLY RATED ASSEMBLY
A MLO
50 A MCB

PANELBOARD SCHEDULE MPC-1

CKT NO.	TRIP AMPS	DESCRIPTION OF LOAD	LOAD KVA	AMPS	POLES	KVA PER PHASE A	KVA PER PHASE B	KVA PER PHASE C	POLES	AMPS	LOAD KVA	DESCRIPTION OF LOAD	TRIP AMPS	CKT NO.
1	70	RESIDUALS PUMP #1A	9.4	33.9	3	9.4			3			T.V.S.S.	30	2
			9.4				9.4							
			9.4					9.4						
7	70	RESIDUALS PUMP #1B	9.4	33.9	3	9.7			3	1.1	0.3	MOTORIZED VALVE MOV #518	20	8
			9.4				9.7				0.3	EQUALIZATION TANK SUPPLY NORTH		
			9.4					9.7			0.3			
13	40	MPZ	2.5	8.5	2	2.8			3	1.1	0.3	MOTORIZED VALVE MOV #519	20	14
			1.6				1.9				0.3	EQUALIZATION TANK SUPPLY SOUTH		
17		SPARE			1			0.3			0.3			
19	70	JET MIXING PUMP NO. 1	3.33	12.0	3	3.3			3			SPARE	20	20
			3.33				3.3							
			3.33					3.3						
25	70	JET MIXING PUMP NO. 2	3.33	12.0	3	3.3			3			SPARE	20	26
			3.33				3.3							
			3.33					3.3						
			TOTAL KVA			28.6	27.7	26.1						
			GRAND CONNECTED TOTAL KVA			82.3								

PANEL **BW**
LOCATION BACKWASH POND
BUILDING
NOTES: RESIDUAL PUMPS ARE DUTY/STANDBY , MAXIMUM LOAD IS ONE PUMP EACH TANK.

SERVICE CHARACTERISTICS
VOLTS: 480Y/277
PHASE: 3
WIRE: 4
10k MIN AIC SYMM, FULLY RATED ASSEMBLY
A MLO
125 A MCB

PANELBOARD SCHEDULE BW (EXISTING)

REV.NO.	DESCRIPTIONS	DATE

REVISIONS

SEAL

SEAL

McKIM&CREED
1365 Hamlet Avenue
Clearwater, Florida 33756
Phone: (727)442-7196, Fax: (727)461-3827
CA Lic. No. 29588
www.mckimcreed.com

Manatee County FLORIDA

MANATEE COUNTY
WTP BIOLOGICAL TREATMENT UNIT

PANEL SCHEDULE I

DATE:	OCTOBER 2015
MCE PROJ. #	1024-0167
DRAWN	LLS
DESIGNED	AAH
CHECKED	JSL
PROJ. MGR.	PJL

SCALE
HORIZONTAL: AS SHOWN
VERTICAL: NA

DRAWING NUMBER
E-3.2

STATUS: REVISION
ISSUE FOR BID

e:\1024\0167\90-drawings\Electrical\E-3.2 1024\0167 Panel Schedule I.dwg, 9/30/2015 11:24:39 AM, Brian Naugle

CKT NO.	TRIP AMPS	DESCRIPTION OF LOAD	LOAD KVA	AMPS	POLES	KVA PER PHASE A	KVA PER PHASE B	KVA PER PHASE C	POLES	AMPS	LOAD KVA	DESCRIPTION OF LOAD	TRIP AMPS	CKT NO.
1	20	MOTORIZED VALVE MOV-201	0.3	1.1	3	0.3			3			SPARE	20	2
		WEST BTU RAW WATER	0.3				0.3							
			0.3					0.3						
7	20	MOTORIZED VALVE MOV-205	0.3	1.1	3	0.6			3	1.1	0.3	MOTORIZED VALVE MOV-211-1	20	8
		COMMON FILTER DRAIN	0.3				0.6				0.3	FILTER EFFLUENT NO.1		
			0.3					0.6			0.3			
13	20	MOTORIZED VALVE MOV-211-2	0.3	1.1	3	0.6			3	1.1	0.3	MOTORIZED VALVE MOV-211-3	20	14
		BACKWASH SUPPLY NO.1	0.3				0.6				0.3	BACKWASH TO WASTE NO.1		
			0.3					0.6			0.3			
19	20	MOTORIZED VALVE MOV-211-4	0.3	1.1	3	0.6			3	1.1	0.3	MOTORIZED VALVE M0V-211-5	20	20
		FILTER TO WASTE NO.1	0.3				0.6				0.3	AIR SCOUR SUPPLY NO.1		
			0.3					0.6			0.3			
25	20	MOTORIZED VALVE MOV-221-1	0.3	1.1	3	0.6			3	1.1	0.3	MOTORIZED VALVE MOV-221-2	20	26
		FILTER EFFLUENT NO.2	0.3				0.6				0.3	BACKWASH SUPPLY NO.2		
			0.3					0.6			0.3			
31	20	MOTORIZED VALVE MOV-221-3	0.3	1.1	3	0.6			3	1.1	0.3	MOTORIZED VALVE MOV-221-4	20	32
		BACKWASH TO WASTE NO.2	0.3				0.6				0.3	FILTER TO WASTE NO.2		
			0.3					0.6			0.3			
37	20	MOTORIZED VALVE MOV-221-5	0.3	1.1	3	0.6			3	1.1	0.3	MOTORIZED VALVE MOV-231-1	20	38
		AIR SCOUR SUPPLY NO.2	0.3				0.6				0.3	FILTER EFFLUENT NO.3		
			0.3					0.6			0.3			
			TOTAL KVA			3.9	3.9	3.9						
			GRAND CONNECTED TOTAL KVA				11.7							

PANEL **PP-7A**
LOCATION BIO FILTER E-ROOM
BUILDING
NOTES:

SERVICE CHARACTERISTICS
VOLTS: 480Y/277
PHASE: 3
WIRE: 4
10k MIN AIC SYMM, FULLY RATED ASSEMBLY

200 A MLO
A MCB

PANELBOARD SCHEDULE PP-7A

CKT NO.	TRIP AMPS	DESCRIPTION OF LOAD	LOAD KVA	AMPS	POLES	KVA PER PHASE A	KVA PER PHASE B	KVA PER PHASE C	POLES	AMPS	LOAD KVA	DESCRIPTION OF LOAD	TRIP AMPS	CKT NO.
1	20	MOTORIZED VALVE MOV-231-2	0.3	1.1	3	0.6			3	1.1	0.3	MOTORIZED VALVE MOV-231-3	20	2
		BACKWASH SUPPLY NO.3	0.3				0.6				0.3	BACKWASH TO WASTE NO.3		
			0.3					0.6			0.3			
7	20	MOTORIZED VALVE MOV-231-4	0.3	1.1	3	0.6			3	1.1	0.3	MOTORIZED VALVE MOV-231-5	20	8
		FILTER TO WASTE NO.3	0.3				0.6				0.3	AIR SCOUR SUPPLY NO.3		
			0.3					0.6			0.3			
13	20	MOTORIZED VALVE MOV-241-1	0.3	1.1	3	0.6			3	1.1	0.3	MOTORIZED VALVE MOV-241-2	20	14
		FILTER EFFLUENT NO.4	0.3				0.6				0.3	BACKWASH SUPPLY NO.4		
			0.3					0.6			0.3			
19	20	MOTORIZED VALVE MOV-241-3	0.3	1.1	3	0.6			3	1.1	0.3	MOTORIZED VALVE MOV-241-4	20	20
		BACKWASH TO WASTE NO.4	0.3				0.6				0.3	FILTER TO WASTE NO.4		
			0.3					0.6			0.3			
25	20	MOTORIZED VALVE MOV-241-5	0.3	1.1	3	0.3			3			SPARE	20	26
		AIR SCOUR SUPPLY NO.4	0.3				0.3							
			0.3					0.3						
31	20	SPARE			3	0.0			1					32
							0.0		1					34
								0.0	1					36
37					1	0.0			1					38
39					1		0.0		1					40
41					1			0.0	1					42
			TOTAL KVA			2.7	2.7	2.7						
			GRAND CONNECTED TOTAL KVA				8.1							

PANEL **PP-7B**
LOCATION BIO FILTER E-ROOM
BUILDING
NOTES:

SERVICE CHARACTERISTICS QSA
VOLTS: 480Y/277
PHASE: 3
WIRE: 4
10k MIN AIC SYMM, FULLY RATED ASSEMBLY

200 A MLO
A MCB

PANELBOARD SCHEDULE PP-7B

CKT NO.	TRIP AMPS	DESCRIPTION OF LOAD	LOAD KVA	AMPS	POLES	KVA PER PHASE A	KVA PER PHASE B	KVA PER PHASE C	POLES	AMPS	LOAD KVA	DESCRIPTION OF LOAD	TRIP AMPS	CKT NO.
1	20	MOTORIZED VALVE MOV-202	0.3	1.1	3	0.6			3	1.1	0.3	MOTORIZED VALVE MOV-204	20	2
		EAST BTU RAW WATER	0.3				0.6				0.3	CLEARWELL FILL		
			0.3					0.6			0.3			
7	20	MOTORIZED VALVE MOV-251-1	0.3	1.1	3	0.6			3	1.1	0.3	MOTORIZED VALVE MOV-251-2	20	8
		FILTER EFFLUENT NO.5	0.3				0.6				0.3	BACKWASH SUPPLY NO.5		
			0.3					0.6			0.3			
13	20	MOTORIZED VALVE MOV-251-3	0.3	1.1	3	0.6			3	1.1	0.3	MOTORIZED VALVE MOV-251-4	20	14
		BACKWASH TO WASTE NO.5	0.3				0.6				0.3	FILTER TO WASTE NO.5		
			0.3					0.6			0.3			
19	20	MOTORIZED VALVE MOV-251-5	0.3	1.1	3	0.6			3	1.1	0.3	MOTORIZED VALVE MOV-261-1	20	20
		AIR SCOUR SUPPLY NO.5	0.3				0.6				0.3	FILTER EFFLUENT NO.6		
			0.3					0.6			0.3			
25	20	MOTORIZED VALVE MOV-261-2	0.3	1.1	3	0.6			3	1.1	0.3	MOTORIZED VALVE MOV-261-3	20	26
		BACKWASH SUPPLY NO.6	0.3				0.6				0.3	BACKWASH TO WASTE NO.6		
			0.3					0.6			0.3			
31	20	MOTORIZED VALVE MOV-261-4	0.3	1.1	3	0.6			3	1.1	0.3	MOTORIZED VALVE MOV-261-5	20	32
		FILTER TO WASTE NO.6	0.3				0.6				0.3	AIR SCOUR SUPPLY NO.6		
			0.3					0.6			0.3			
37	20	MOTORIZED VALVE MOV-273	0.3	1.1	3	0.3			3				50	38
		AIR UNLOADING	0.3				0.3							
			0.3					0.3						
			TOTAL KVA			3.9	3.9	3.9						
			GRAND CONNECTED TOTAL KVA				11.7							

PANEL **PP-8A**
LOCATION BIO FILTER E-ROOM
BUILDING
NOTES:

SERVICE CHARACTERISTICS
VOLTS: 480Y/277
PHASE: 3
WIRE: 4
10k MIN AIC SYMM, FULLY RATED ASSEMBLY

200 A MLO
A MCB

PANELBOARD SCHEDULE PP-8A

CKT NO.	TRIP AMPS	DESCRIPTION OF LOAD	LOAD KVA	AMPS	POLES	KVA PER PHASE A	KVA PER PHASE B	KVA PER PHASE C	POLES	AMPS	LOAD KVA	DESCRIPTION OF LOAD	TRIP AMPS	CKT NO.
1	20	MOTORIZED VALVE MOV-110	0.3	1.1	3	0.6			3	1.1	0.3	MOTORIZED VALVE MOV-111	20	2
		RWPS #2 BYPASS	0.3				0.6				0.3	RWPS #1 BYPASS		
			0.3					0.6			0.3			
7	20	MOTORIZED VALVE MOV-112	0.3	1.1	3	0.6			3	1.1	0.3	MOTORIZED VALVE MOV-113	20	8
		WESTSIDE BYPASS	0.3				0.6				0.3	EASTSIDE BYPASS		
			0.3					0.6			0.3			
13	20	SPARE			3	0.3			3	1.1	0.3	MOTORIZED VALVE MOV-117	20	14
							0.3				0.3	RAPID MIX 'B'		
								0.3			0.3			
19	20	FILTER SLIDE GATE #1 SLG-212	0.3	1.1	3	0.6			3	1.1	0.3	FILTER SLIDE GATE #2 SLG-222	20	20
			0.3				0.6				0.3			
			0.3					0.6			0.3			
25	20	FILTER SLIDE GATE #3 SLG-232	0.3	1.1	3	0.6			3	1.1	0.3	FILTER SLIDE GATE #4 SLG-242	20	26
			0.3				0.6				0.3			
			0.3					0.6			0.3			
31	20	FILTER SLIDE GATE #5 SLG-252	0.3	1.1	3	0.6			3	1.1	0.3	FILTER SLIDE GATE #6 SLG-262	20	32
			0.3				0.6				0.3			
			0.3					0.6			0.3			
37	20	SPARE			3	0.0			1					38
							0.0		1					40
								0.0	1					42
			TOTAL KVA			3.3	3.3	3.3						
			GRAND CONNECTED TOTAL KVA				9.9							

PANEL **PP-8B**
LOCATION BIO FILTER E-ROOM
BUILDING
NOTES:

SERVICE CHARACTERISTICS
VOLTS: 480Y/277
PHASE: 3
WIRE: 4
10k MIN AIC SYMM, FULLY RATED ASSEMBLY

200 A MLO
A MCB

PANELBOARD SCHEDULE PP-8B

REV.NO.	DESCRIPTIONS	DATE

REVISIONS

SEAL

SEAL

McKIM&CREED
1365 Hamlet Avenue
Clearwater, Florida 33756
Phone: (727)442-7196, Fax: (727)461-3827
CA Lic. No. 29588
www.mckimcreed.com

Manatee County FLORIDA

MANATEE COUNTY
WTP BIOLOGICAL TREATMENT UNIT

PANEL SCHEDULE II

DATE:	OCTOBER 2015
MCE PROJ. #	1024-0167
DRAWN	LLS
DESIGNED	AAH
CHECKED	JSL
PROJ. MGR.	PJL

SCALE
HORIZONTAL: AS SHOWN
VERTICAL: NA

DRAWING NUMBER
E-3.3

STATUS: ISSUE FOR BID
REVISION

E:\1024\0167\00-drawings\Electrical\E-3.3-1024167 Panel Schedule II.dwg, 9/30/2015 11:24:50 AM, Brian Naught

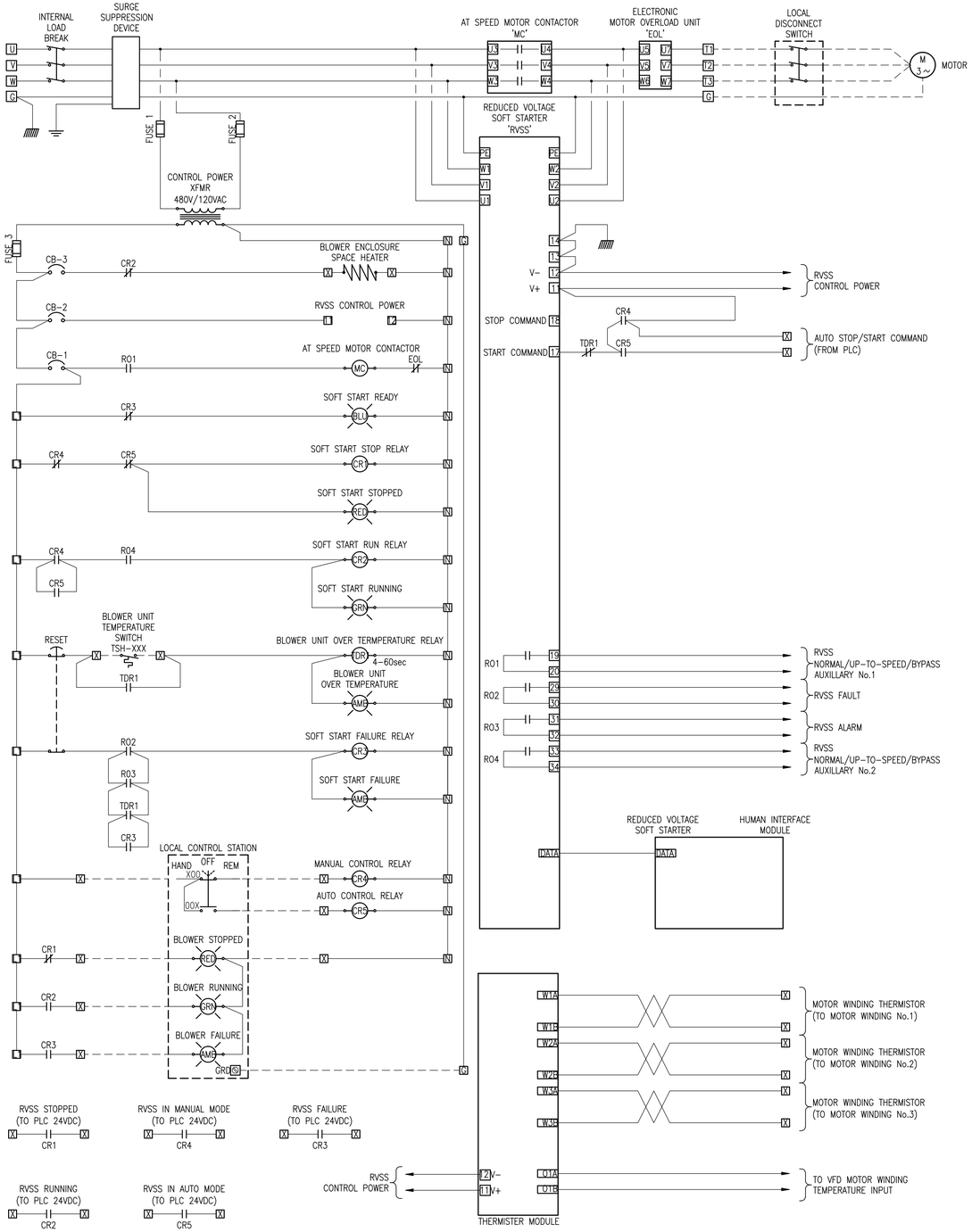

BLOWER RVSS (SOFT START)

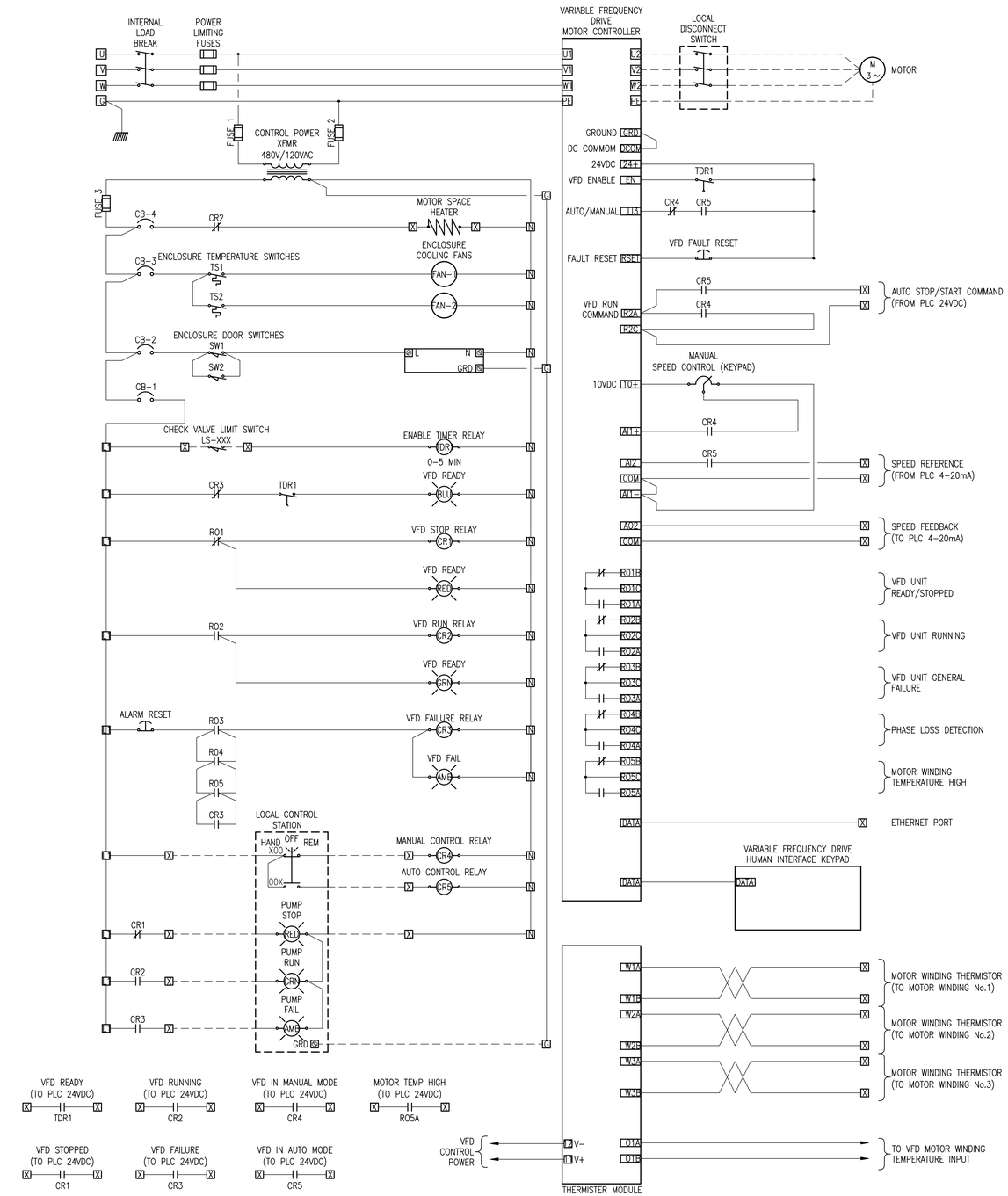

BACKWASH PUMP VARIABLE SPEED DRIVE

REV.NO.	DESCRIPTIONS	DATE
	REVISIONS	

SEAL

SEAL

McKIM&CREED
1365 Hamlet Avenue
Clearwater, Florida 33756
Phone: (727)442-7196, Fax: (727)461-3827
CA Lic. No. 29588
www.mckimcreed.com

Manatee County FLORIDA

MANATEE COUNTY
WTP BIOLOGICAL TREATMENT UNIT

CONTROL SCHEMATICS I

DATE:	OCTOBER 2015
MCE PROJ. #	1024-0167
DRAWN	AAH
DESIGNED	AAH
CHECKED	JSL
PROJ. MGR.	PJL

SCALE
HORIZONTAL: AS SHOWN
VERTICAL: NA

DRAWING NUMBER
E-3.4

STATUS: ISSUE FOR BID
REVISION

E:\1024\0167\JB\-drawings\Electrical\E-3.4 1024\0167 Control Schematic 1.dwg, 9/30/2015 11:25:01 AM, Brian Naught

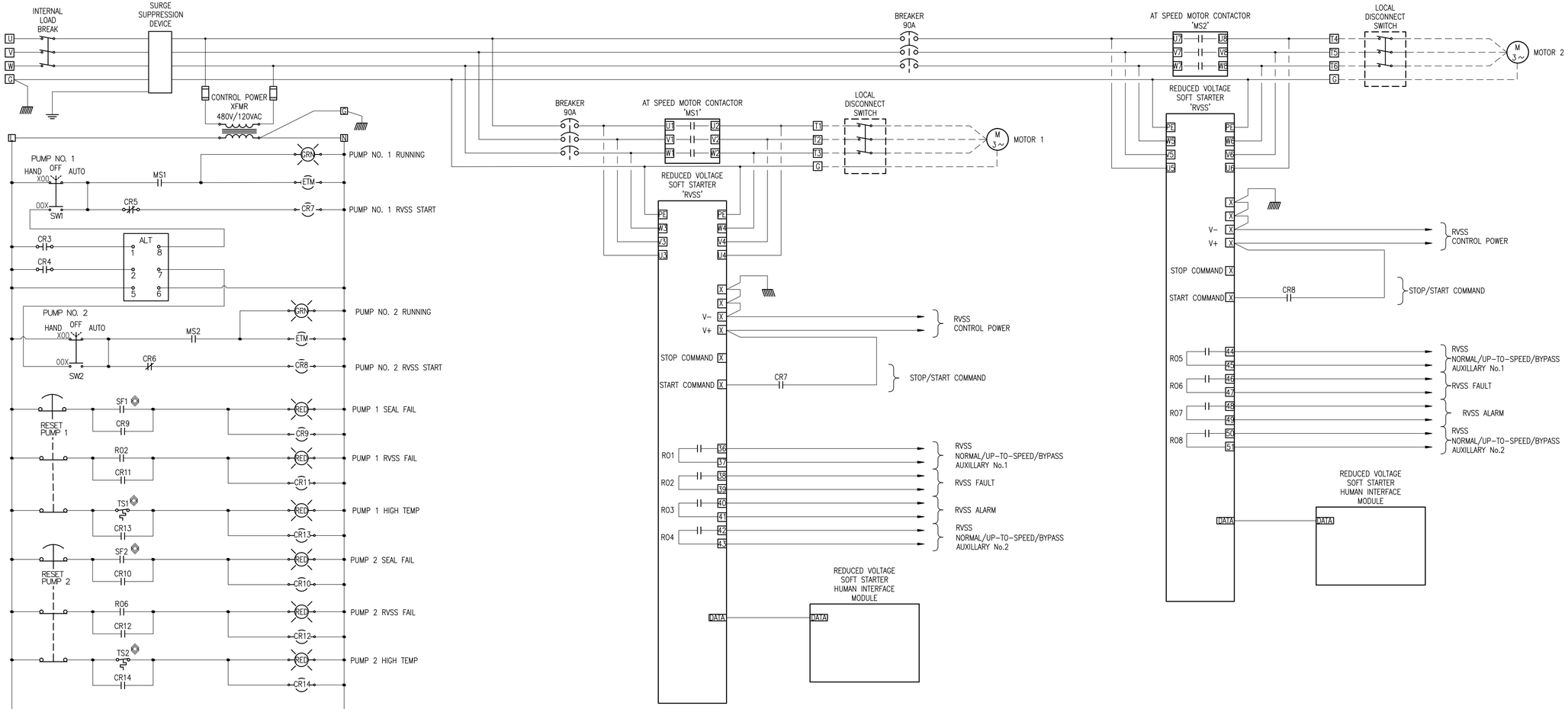

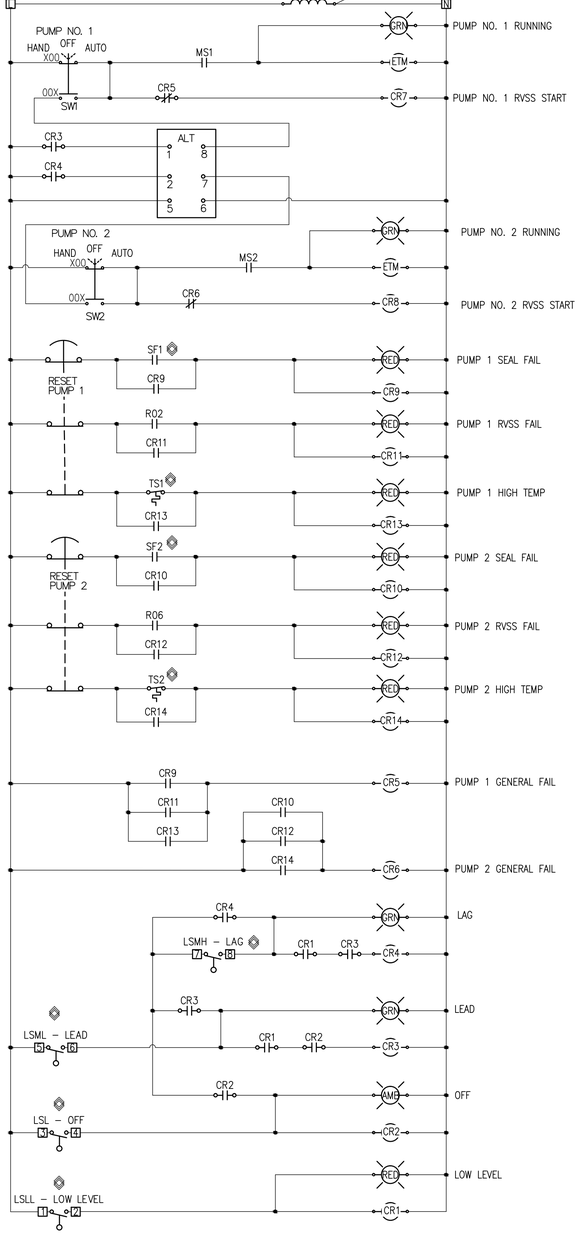

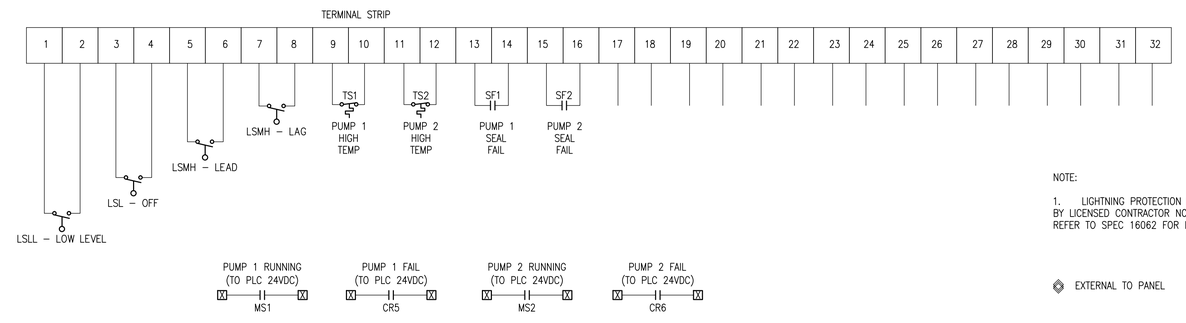

NOTE:

1. LIGHTNING PROTECTION INSTALLED BY LICENSED CONTRACTOR NOT SHOWN. REFER TO SPEC 16062 FOR DETAILS.

EXTERNAL TO PANEL

EQ TANK RETURN PUMP PANEL (TYP. OF TWO)

REV.NO.	DESCRIPTIONS	DATE
	REVISIONS	

SEAL

SEAL

McKIM&CREED
1365 Hamlet Avenue
Clearwater, Florida 33756
Phone: (727)442-7196, Fax: (727)461-3827
CA Lic. No. 29588
www.mckimcreed.com

Manatee County FLORIDA

MANATEE COUNTY
WTP BIOLOGICAL TREATMENT UNIT

CONTROL SCHEMATICS II

DATE:	OCTOBER 2015
MCE PROJ. #	1024-0167
DRAWN	LLS
DESIGNED	LLS
CHECKED	JSL
PROJ. MGR.	PJL

SCALE
HORIZONTAL: AS SHOWN
VERTICAL: NA

DRAWING NUMBER
E-3.5

STATUS: ISSUE FOR BID
REVISION

E:\1024\0167\JB\-drawings\Electrical\E-3.5 1024\0167 Control Schematics II.dwg, 9/30/2015 11:25:10 AM, Brian Naught