ANNA MARIA ISLAND
16" RELIEF WATER MAIN
PHASE II

MANATEE COUNTY, FLORIDA
MANATEE COUNTY
UTILITIES DEPARTMENT

DATE: MAY 1983
PROJECT NO: 6049-7
MCUD PROJECT NO: 5319-415-000-535
(PHASE II)

CAMP DRESSER AND McKEE INC.
ENVIRONMENTAL ENGINEERS
CLEARWATER & BRADENTON, FLORIDA

T-16

28-02

AF 20333

INDEX TO SHEETS

SYMBOLS

NEW

- BUTTERFLY VALVE
- NEW PIPE
- REDUCER
- TEE
- 90°- BEND 45°-BEND
- GATE VALVE
- FIRE HYDRANT
- AIR RELEASE VALVE
- BLIND FLANGE
- BLOW OFF

EXISTING

- P — POWER LINE
- T — TELEPHONE CABLE
- C.T.V. — CABLE TELEVISION
- R/W
- W.M. — WATER MAIN
- VALVE
- FIRE HYDRANT
- SAN. SEW. — SANITARY SEWER
- STORM SEWER — STORM SEWER
- CATCH BASIN FOR STORM SEWER
- POWER POLE
- LIGHT POLE
- T.B.M.
- FENCE
- TELEPHONE BOX
- WATER METER
- GATE VALVE
- GAS — GAS LINE
- FLOW
- EASEMENT
- EXPANSION JOINT

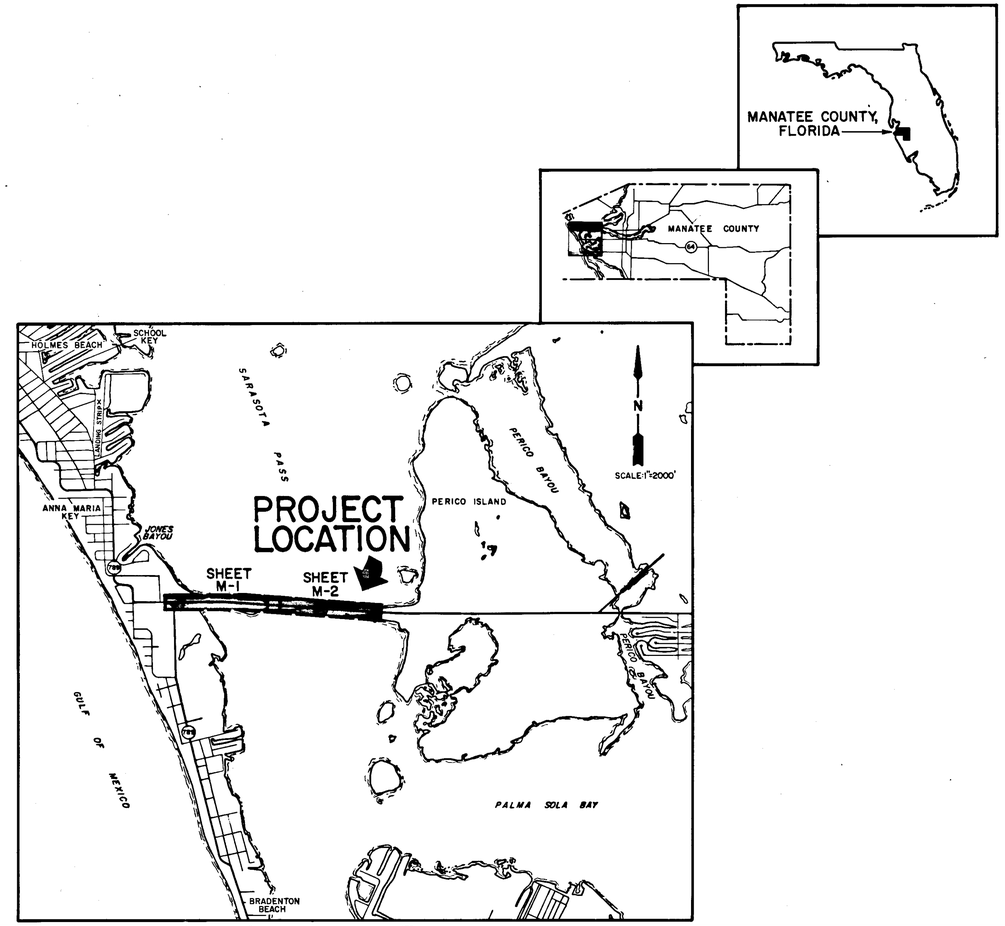

ABBREVIATIONS

A.C.	ASBESTOS CONCRETE PIPE
ASPH.	ASPHALT
AVE.	AVENUE
CONC.	CONCRETE
CT.	COURT
C.T.V.	CABLE TELEVISION
℄	CENTERLINE
C.P	CONCRETE PIPE
D.I.P	DUCTILE IRON PIPE
DIA., ϕ	DIAMETER
DR.	DRIVE
E.	EAST
EXIST.	EXISTING
FT.	FEET
G.T.E.	GENERAL TELEPHONE
M.H.	MANHOLE
N.	NORTH
NO., #	NUMBER
P	POWER
P.C.	POINT OF CURVE
P.T.	POINT OF TANGENCY
P.V.C.	POLYVINYL CHLORIDE
RAD.	RADIUS
R/W	RIGHT-OF-WAY
S.	SOUTH
ST.	STREET
T.	TELEPHONE
TAN.	TANGENT
T.B.M.	TEMPORARY BENCH MARK
TYP.	TYPICAL
W.	WEST
W.M.	WATER MAIN
G.V.	GATE VALVE
B.F.V.	BUTTERFLY VALVE
F.H.	FIRE HYDRANT
A.R.& V.V.	AIR RELEASE & VACUUM VALVE

GENERAL NOTES

1. LOCATION OF UTILITIES IN RIGHT-OF-WAY HAVE BEEN OBTAINED FROM UTILITY OWNERS. DEPTH OF COVER AND EXACT LOCATION OF UTILITIES IS UNKNOWN. CONTRACTOR MUST CONFIRM ACTUAL LOCATION PRIOR TO BIDDING.
2. CONTRACTOR TO DETERMINE DEPTH OF EXISTING FACILITIES IN ADVANCE OF CONSTRUCTION SO THAT A DECISION CAN BE MADE TO PLACE NEW MAIN OVER OR UNDER EXISTING FACILITIES IN ACCORDANCE WITH SOUND CONSTRUCTION PRACTICES.
3. NO FLANGED PIPE SHALL BE INSTALLED UNDERGROUND, EXCEPT AS NOTED IN THE PLANS OR SPECIFICATIONS.
4. LOCATION OF PROPOSED WATER MAIN IN ROAD RIGHT-OF-WAYS SHOWN ON DRAWINGS MAY BE ADJUSTED HORIZONTALLY & VERTICALLY IF APPROVED BY THE ENGINEER, TO AVOID EXISTING STRUCTURES & UTILITIES.
5. PIPE SHALL HAVE 36" COVER MIN. UNLESS SHOWN OTHERWISE ON THE DRAWINGS.
6. ALL BENDS TO BE RESTRAINED UTILIZING RESTRAINED JOINTS EXCEPT AS NOTED IN PLANS OR DIRECTED BY ENGINEER.
7. ALL DISTURBED AREAS TO BE RESTORED TO ORIGINAL CONDITION OR BETTER.
8. PIPE SHALL BE INSTALLED IN DRY TRENCH UTILIZING NECESSARY DEWATERING METHODS, EXCEPT AT SUBAQUEOUS CROSSING.
9. ALL PIPE BURIED OR ENCASED IN CONCRETE ON THIS PROJECT SHALL BE ENCASED IN POLYETHYLENE, IN ACCORDANCE WITH A.N.S.I./A.W.W.A. C105 - AMERICAN NATIONAL STANDARD FOR POLYETHYLENE ENCASEMENT FOR GRAY AND DUCTILE IRON PIPING.
10. ALL ANCHOR BOLTS AND METAL STRAPS SHALL BE 316 STAINLESS STEEL ACCORDING TO SPECIFICATIONS. ANCHOR BOLTS SHALL BE NO CLOSER THAN 6" TO EDGE OF CONCRETE.
11. ALL ELEVATIONS ARE REFERRED TO MEAN SEA LEVEL OF THE N.O.S.
12. THE CONTRACTOR SHALL PROVIDE AT LEAST 48 HOURS NOTICE TO THE VARIOUS UTILITY COMPANIES IN ORDER TO PERMIT THE LOCATION OF EXISTING UNDERGROUND UTILITIES IN ADVANCE OF CONSTRUCTION.
13. ALL PIPING ATTACHED TO THE BRIDGE SHALL RECEIVE A PROTECTIVE COATING AS REQUIRED BY THE "FLORIDA DEPARTMENT OF TRANSPORTATION COATING SYSTEMS FOR STEEL AND CAST IRON POTABLE WATER MAINS ON BRIDGES"
14. DURING ALL CONSTRUCTION IN THE AREAS OF THE SARASOTA PASS WHEN SILT IS INTRODUCED OR POSSIBLE, THE CONTRACTOR SHALL USE A FLOTATION COLLAR AND SILT BARRIER IN ACCORDANCE WITH DNR & DER REQUIREMENTS.

REV NO.	DATE	DRWN	CHKD	REMARKS

DESIGNED BY: ERC
DRAWN BY: D.F.G.
CHECKED BY: KKC
APPROVED BY: RA
DATE: DEC. 1982

CAMP DRESSER & McKEE INC.

CDM
environmental engineers, scientists, planners, & management consultants

ANNA-MARIA ISLAND
16" RELIEF WATER MAIN PHASE II
FOR THE MANATEE COUNTY UTILITIES DEPARTMENT
PROJECT LOCATION, SYMBOLS & ABBREVIATIONS

T17

PROJECT NO. 6049-7

SHEET NO. 1

28-02

AF 13070

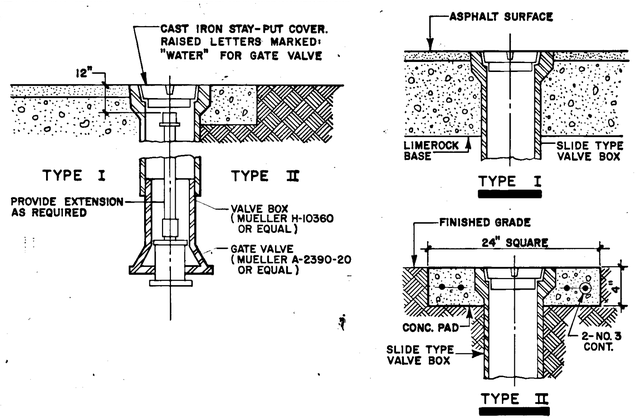

VALVE BOX DETAIL

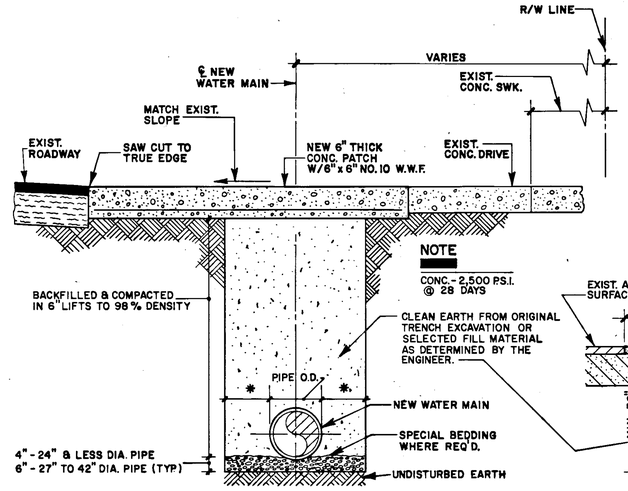

NOTE

CONC.-2,500 P.S.I. @ 28 DAYS

TYPICAL DITCH EXCAVATION & CONCRETE DRIVE PATCH

N.T.S.

* 10" MAXIMUM FOR PIPE DIA. LESS THAN 24", - 12" MAXIMUM DIA. 24" AND LARGER.

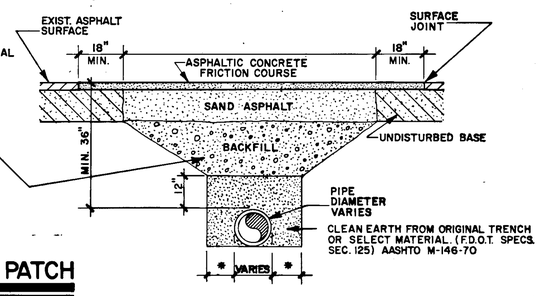

OPEN CUT DETAIL

N.T.S.

NOTE

1. AT ANY AND ALL OPEN CUT CROSSINGS, A MINIMUM OF ONE-WAY TRAFFIC WILL BE MAINTAINED AT NIGHT. ALL TRAFFIC DETOURS WILL BE RESTRICTED TO THE LIMITS OF THE RIGHT-OF-WAY WITH NECESSARY FLAGMEN AND MARKING DEVICES. DETOURS WILL BE APPROVED BY THE ENGINEER OR HIS REPRESENTATIVE.
2. ALL NECESSARY SIGNS, FLAGMEN AND OTHER SAFETY DEVICES WILL BE USED IN ACCORDANCE WITH THE FLORIDA DEPARTMENT OF TRANSPORTATION SAFETY MANUAL AND THE MANUAL ON UNIFORM TRAFFIC CONTROL DEVICES.
3. ALL SIDE DRAINS, SIDE DITCHES AND STORM SEWERS WILL BE REFERENCED, AS TO GRADE AND LOCATION, PRIOR TO CONSTRUCTION.
4. A MINIMUM OF TWO DENSITY TESTS SHALL BE TAKEN FOR EACH SIX INCH (6") LIFT OF SUBGRADE AND EACH LIFT OF BASE MATERIAL AT EACH OPEN CUT CROSSING. WHEN THE SPECIFIED COMPACTED BASE IS GREATER THAN SIX AND ONE-HALF INCHES (6 1/2"), THE BASE SHALL BE CONSTRUCTED IN TWO OR MORE COURSES. PROCTORS FOR MATERIALS USED IN BACKFILLING SHALL BE OBTAINED BY A CERTIFIED LABORATORY. DENSITY TESTS SHALL BE CONDUCTED BY A CERTIFIED LABORATORY. THE PERCENTAGE OF MAXIMUM DENSITY REQUIRED SHALL BE IN ACCORDANCE WITH THE LATEST EDITION OF THE DEPARTMENT OF TRANSPORTATION STANDARD SPECIFICATIONS FOR ROAD AND BRIDGE CONSTRUCTION. ALL DENSITY TESTS SHALL BE COMPLETED AND ACCEPTED ON EACH LAYER PRIOR TO ADDITIONAL BACKFILLING. A COPY OF ALL DENSITY TESTS SHALL BE FURNISHED TO THE COUNTY.(40 L.B.R. MINIMUM)
5. TEMPORARY PATCHES WILL BE MAINTAINED SO AS TO PROVIDE A SMOOTH, ALL-WEATHER SURFACE AT ALL TIMES. PERMANENT REPLACEMENT OF THE TEMPORARY PATCH SHALL BE MADE AS SOON AS ALL OTHER WORK IS COMPLETED.
6. SHORING WILL BE REQUIRED WHERE NECESSARY TO PROTECT EXISTING PAVEMENT.
7. ALL OTHER DAMAGES TO EXISTING PAVEMENT AND STRUCTURES SHALL BE CORRECTED OR REPAIRED IMMEDIATELY, AS DIRECTED BY MANATEE COUNTY UTILITIES DEPARTMENT.
8. ALL MATERIALS USED IN BACKFILLING, SUBGRADE, BASE AND SURFACE SHALL CONFORM TO THE DEPARTMENT OF TRANSPORTATION CURRENT SPECIFICATIONS.
9. THESE GUIDELINES ARE TO BE USED ALSO ON OPEN SHOULDER CUTS.

GUIDELINES FOR OPEN CUTS

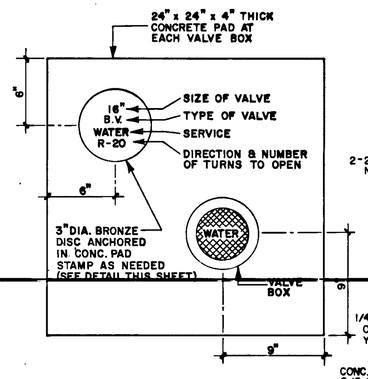

CONCRETE VALVE PAD

N.T.S.

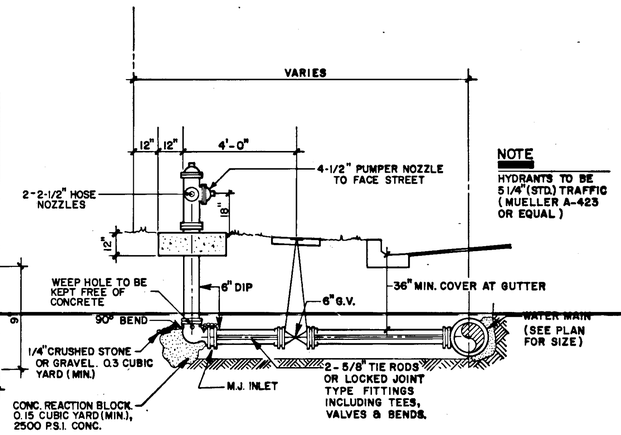

NOTE

HYDRANTS TO BE 5 1/4" (STD.) TRAFFIC (MUELLER A-423 OR EQUAL)

FIRE HYDRANT DETAIL

N. T. S.

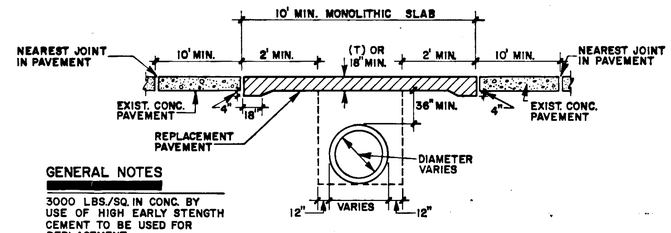

GENERAL NOTES

3000 LBS./SQ. IN CONC. BY USE OF HIGH EARLY STENGTH CEMENT TO BE USED FOR REPLACEMENT.

REPLACEMENT OF CONCRETE PAVEMENT DETAIL

N.T.S.

NOTE

1. REPLACED BASE MATERIAL OVER DITCH SHALL BE TWICE THE THICKNESS OF THE ORIGINAL BASE.
2. BASE MATERIAL SHALL BE PLACED IN TWO OR THREE LAYERS AND EACH LAYER THOROUGHLY ROLLED OR TAMPED TO MAXIMUM DENSITY OR BY A.A.S.H.O. T-180 SPEC.
3. ASPHALT CONCRETE PAVEMENT JOINTS SHALL BE MECHANICALLY SAWED.
4. SURFACED TREATED PAVEMENT JOINTS SHALL BE LAPPED AND FEATHERED.
5. SURFACE MATERIAL WILL BE CONSISTENT WITH THE EXISTING SURFACE.
6. WHERE TRAFFIC SIGNALIZATION EXISTS IT WILL BE THE RESPONSIBILITY OF THE PERMITTEE TO REPLACE THE SYSTEM DISTURBED IN ACCORDANCE WITH THE GOVERNING AUTHORITY'S REQUIREMENTS.
7. ALL ROADWAY REPLACEMENT SHALL BE IN COMPLIANCE WITH FLA. D.O.T. UTILITY ACCOMODATION GUIDE.

OPEN CUT PAVEMENT REPAIR

FITTING	PIPE SIZE		16"	10" & 12"	8"
TEE	THRUST (LBS.)		54,400	31,000	13,400
	BEARING AREA (FT²)		27.20	15.50	6.70
		W	8'-5"	5'-6"	3'-8"
		D	3'-3"	2'-10"	2'-0"
	CONCRETE (YD³)		1.01	.57	.25
22 1/2°	THRUST (LBS.)		21,200	12,200	5,200
	BEARING AREA (FT²)		10.60	6.10	2.60
		W	6'-0"	3'-6"	2'-0"
		D	1'-10"	1'-9"	1'-4"
	CONCRETE (YD³)		.39	.23	.10
45°	THRUST (LBS.)		41,800	23,800	10,200
	BEARING AREA (FT²)		20.90	11.90	5.10
		W	6'-6"	5'-0"	2'-6"
		D	3'-3"	2'-5"	2'-2"
	CONCRETE (YD³)		.77	.44	.19
90°	THRUST (LBS.)		76,600	43,600	18,800
	BEARING AREA (FT²)		38.30	21.80	9.40
		W	8'-8"	6'-6"	4'-6"
		D	4'-6"	3'-5"	2'-2"
	CONCRETE (YD³)		1.42	.81	.35

DIMENSIONS OF THRUST BLOCKS

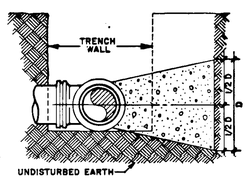

TYPICAL SECTION

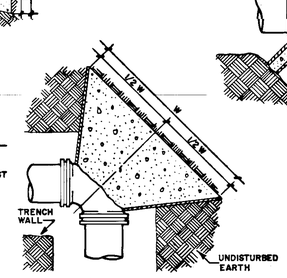

90° BEND

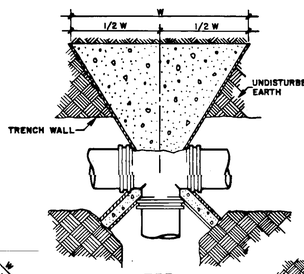

TEE

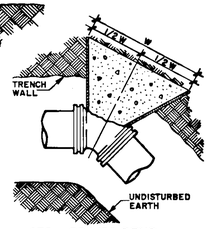

45° - 22 1/2° BEND

NOTE

1. ALL BEARING SURFACE TO BE CARRIED TO UNDISTURBED SOIL.
2. THIS TABLE SHOWS THE MINIMUM SIZE THRUST BLOCKS FOR SOIL BEARING PRESSURE OF 2000 psf AND AN INTERNAL PRESSURE OF 150 psi.
3. POOR SOIL (SILTY SOILS, CLAYS, MUCK, OR PEAT) WILL REQUIRE LARGER THRUST BLOCKS, ENGINEER TO SELECT SIZE.

THRUST BLOCK DETAILS

N.T.S.

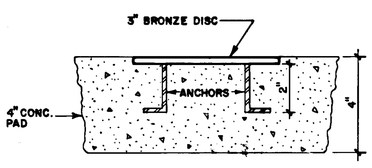

DISC DETAIL

N.T.S.

REV. NO.	DATE	DRAWN	CHKD	REMARKS

DESIGNED BY P.R.C. CHECKED BY K.K.C.
DRAWN BY A.C.S. APPROVED BY T.B.
DATE DEC. 1982

CAMP DRESSER & McKEE INC.
CDM
environmental engineers, scientists, planners & management consultants

ANNA-MARIA ISLAND
16" RELIEF WATER MAIN PHASE II
FOR THE
MANATEE COUNTY UTILITIES DEPARTMENT
TYPICAL DETAILS

T18

CLEARWATER OFFICE
PROJECT NO.
6049-7

SHEET NO.
2

28-02

AF 13070

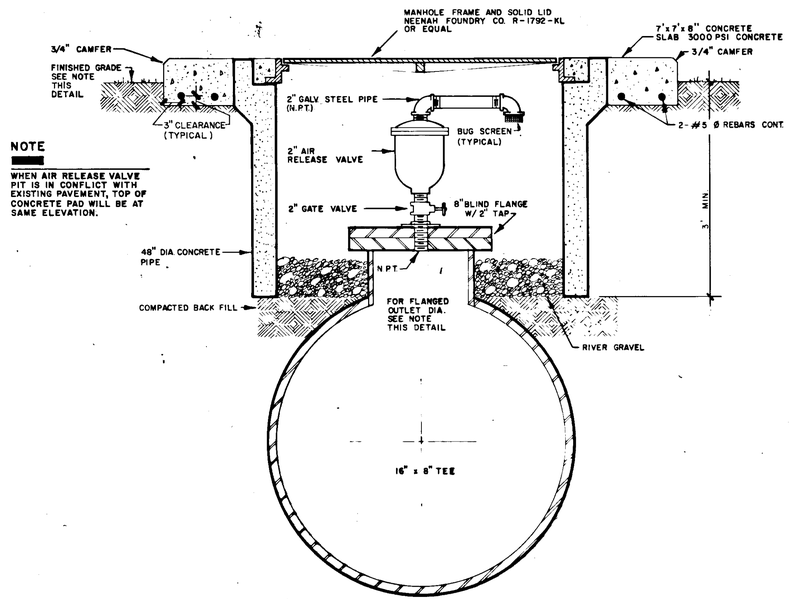

NOTE

WHEN AIR RELEASE VALVE PIT IS IN CONFLICT WITH EXISTING PAVEMENT, TOP OF CONCRETE PAD WILL BE AT SAME ELEVATION.

2" AIR RELEASE VALVE & PIT DETAIL

N.T.S.

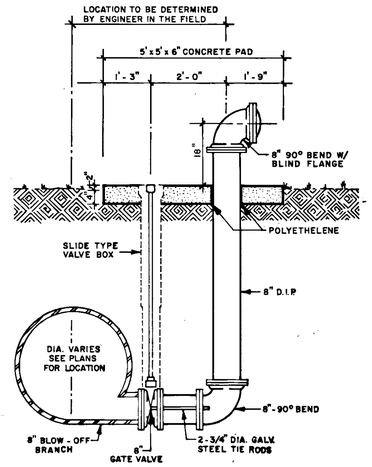

8" BLOW-OFF ASSEMBLY

N.T.S.

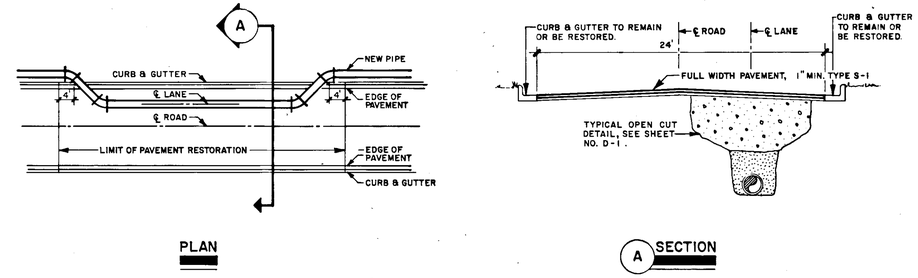

PLAN

A SECTION

FULL PAVEMENT RESTORATION DETAIL

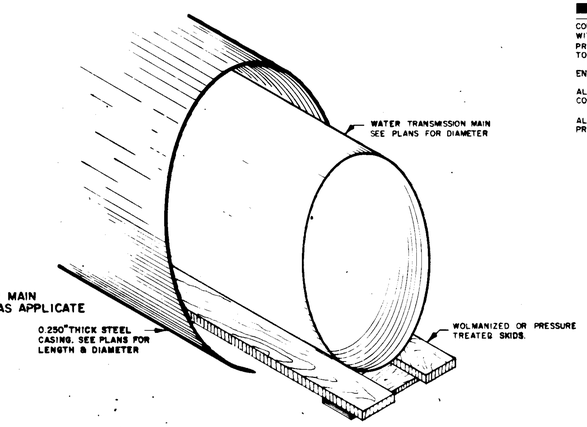

NOTE

CONTRACTOR TO PROVIDE FOR CARRIER PIPE THROUGH CASING WITH PRESSURE TREATED LUMBER AND RIVER GRAVEL TO PREVENT DAMAGE TO PIPE DURING INSTALLATION. CONTRACTOR TO CONFORM TO DOT REQUIREMENTS & SPECIFICATIONS

END OF CASING PIPE TO BE BRICKED & MORTARED.

ALL MATERIALS AND METHODS OF CONSTRUCTION SHALL CONFORM TO APPLICABLE FLORIDA DOT SPECIFICATIONS

ALL UNSUITABLE MATERIALS SHALL BE DISPOSED OF IN AREAS PROVIDED BY THE CONTRACTOR

NOTE FOR ROAD STEEL CASING

STEEL CASING PIPE TO BE IN ACCORDANCE WITH ASTM-A139 FOR ROADS & HIGHWAYS AND GRADE C STEEL

ROAD BORE & JACK - STEEL CASING DETAIL

N.T.S.

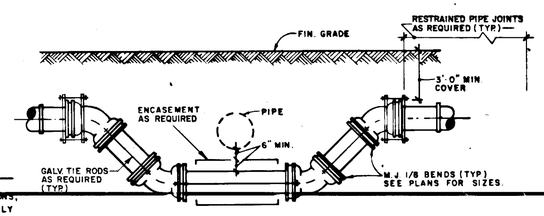

NOTE

WHENEVER POSSIBLE, DEFLECTION OF THE PIPE JOINTS WILL BE USED TO AVOID EXISTING OBSTRUCTIONS, THE DROP TYPE UTILITY CROSSING WILL BE USED ONLY WHEN AUTHORIZED BY THE ENGINEER IN THE FIELD. NO. AND DIAMETER OF THE TIE RODS TO BE APPROVED BY THE ENGINEER.

DROP TYPE UTILITY CROSSING

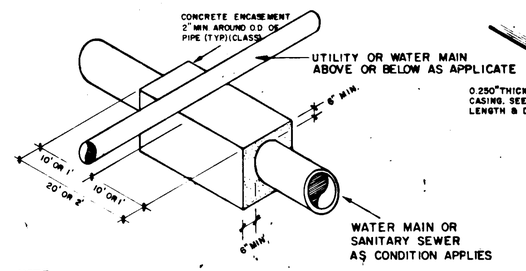

NOTE

CONDITION 1

UTILITIES, INCLUDES FORCE MAINS, BUT NOT GRAVITY SANITARY SEWERS: WATER MAIN ABOVE OR BELOW UTILITY - ENCASE WATER MAIN 1 FOOT ON BOTH SIDES OF POINT OF CROSSING - MIN. SEPERATION = 12"

CONDITION 2

GRAVITY SANITARY SEWER

A WATER MAIN CROSSING ABOVE SEWER WITH CLEARANCE GREATER THAN 18" - ENCASE WATER MAIN 1 FOOT ON BOTH SIDES OF POINT OF CROSSING

B WATER MAIN CROSSING OVER SEWER WITH LESS THAN 18" INCHES CLEARANCE OR UNDER SEWER - ENCASE SEWER 10 FEET ON BOTH SIDES OF POINT OF CROSSING. MINIMUM FREE CLEARANCE = 12 INCHES.

UTILITY ENCASEMENT DETAIL

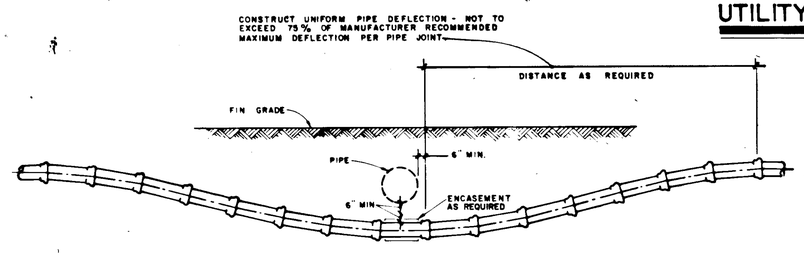

DEFLECTION TYPE UTILITY CROSSING

N.T.S.

UTILITY CROSSING DETAILS

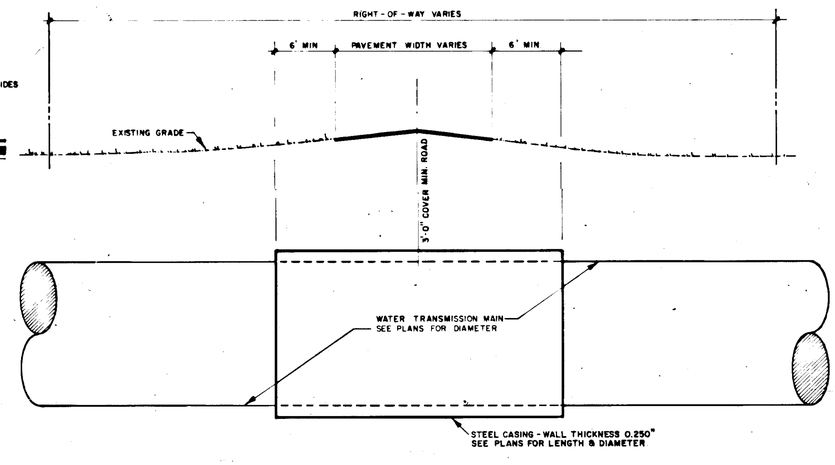

ROAD BORE & JACK - PROFILE

N.T.S.

REV. NO.	DATE	DRWN	CHKD	REMARKS

DESIGNED BY PRC CHECKED BY PRC
DRAWN BY ELP APPROVED BY
DATE DEC. 1982

CAMP DRESSER & McKEE INC.

CDM
environmental engineers, scientists, planners & management consultants

ANNA-MARIA ISLAND
16" RELIEF WATER MAIN PHASE II
FOR THE
MANATEE COUNTY UTILITIES DEPARTMENT
TYPICAL DETAILS

T19

CLEARWATER OFFICE
PROJECT NO.
6049-7

SHEET NO.
3

28-02

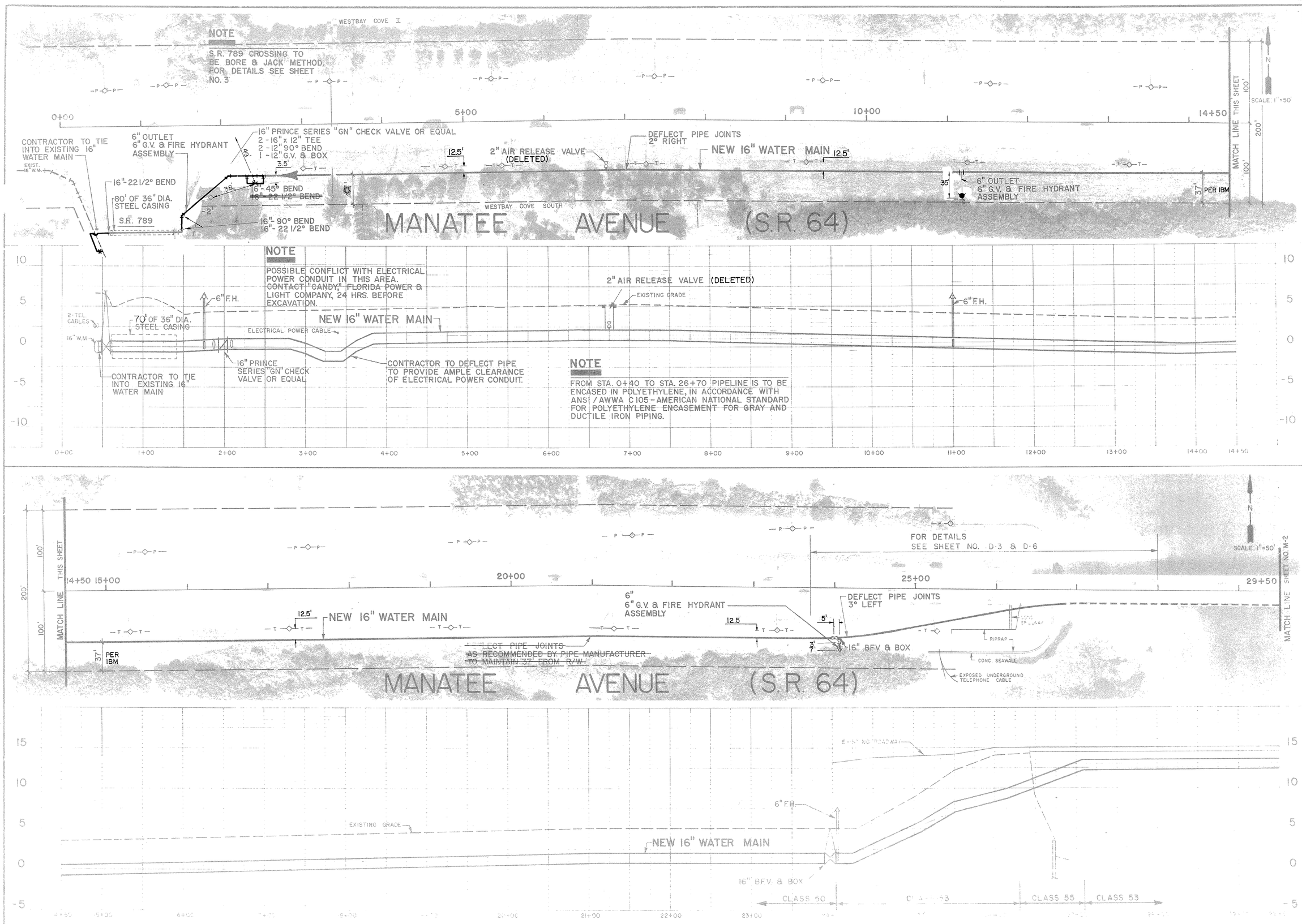

CAMP DRESSER & MCKEE INC

CDM

ANNA-MARIA ISLAND
16" RELIEF WATER MAIN PHASE II
MANATEE COUNTY UTILITIES DEPARTMENT
16" WATER MAIN

T20

28-02

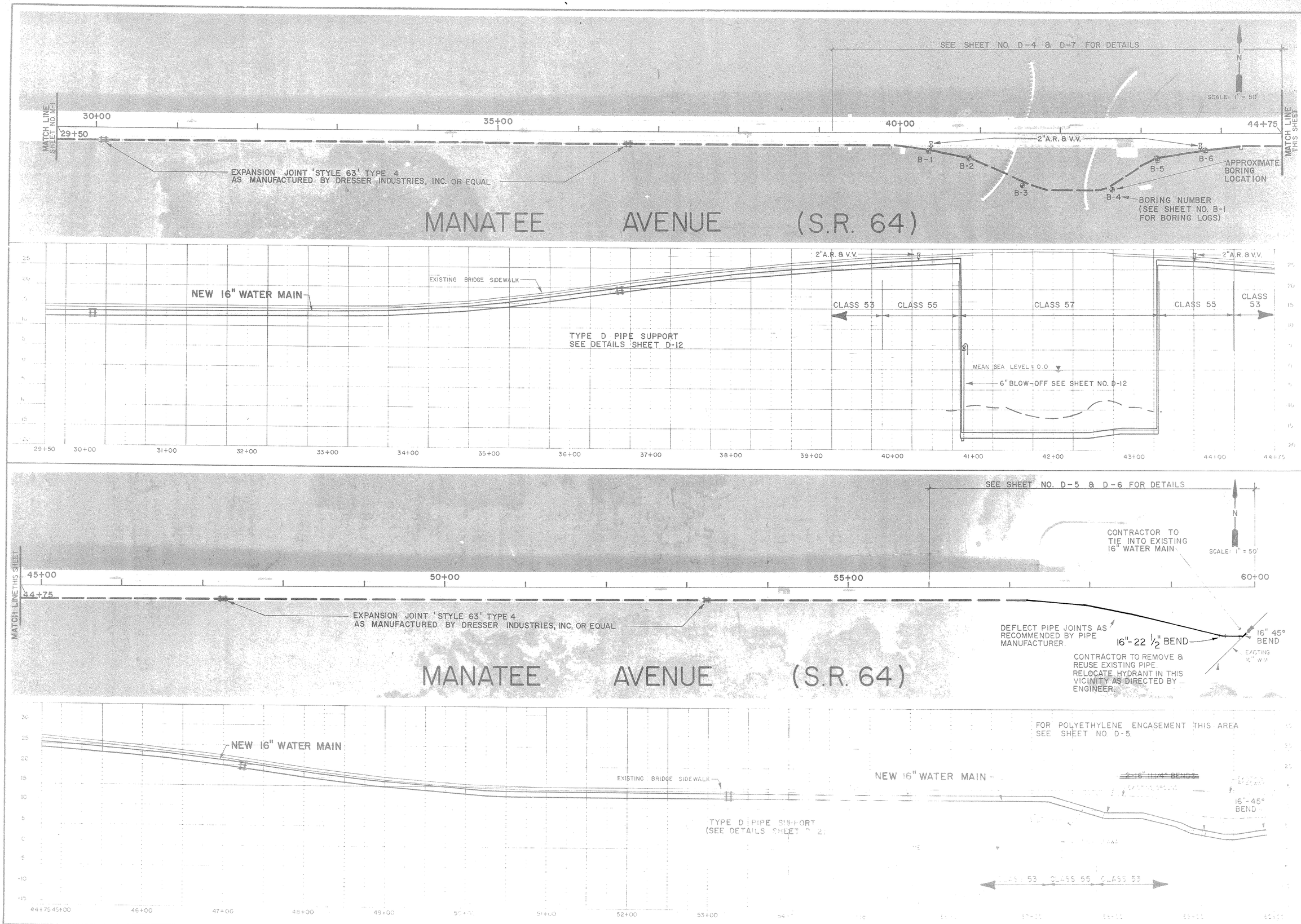

CAMP DRESSER & MCKEE INC

CDM

ANNA-MARIA ISLAND
16" RELIEF WATER MAIN PHASE II
MANATEE COUNTY UTILITIES DEPARTMENT
16" WATER MAIN

T21

28-02

AF 20333

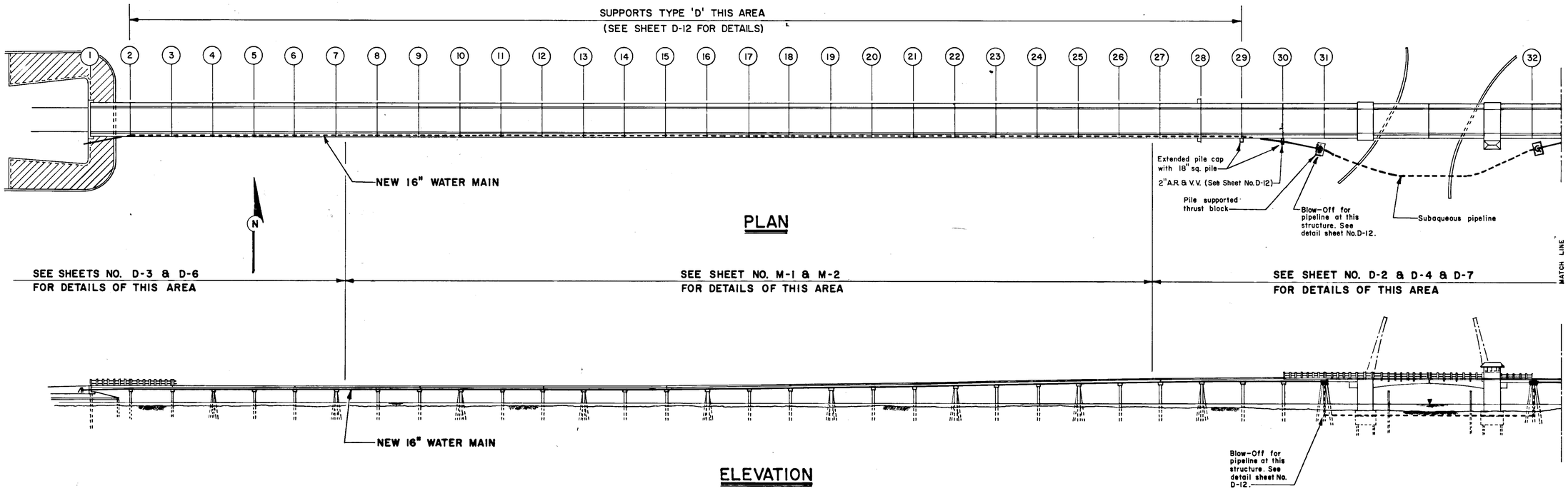

PLAN

ELEVATION

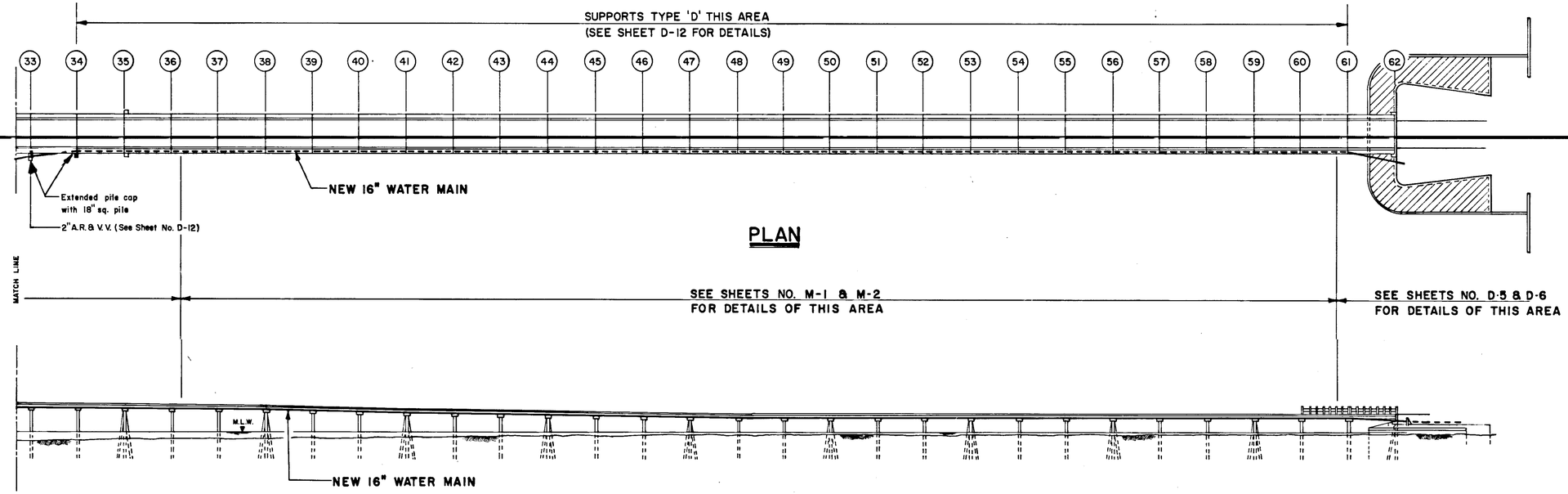

PLAN

ELEVATION

SCALE
1" = 60'

NOTE

1. BRIDGE LAYOUT FROM DRAWING NUMBER 8, JOB NUMBER 1315-175 DATED 1952 AS REVISED IN 1955, BY PARSONS, BRINCKERHOFF, HALL & MACDONALD.
2. CIRCLED NUMBERS ARE PILE BENT DESIGNATIONS.

REV NO.	DATE	DRWN	CHKD	REMARKS

DESIGNED BY: P.R.C.
DRAWN BY: D.M.E.
CHECKED BY: PRC
APPROVED BY:
DATE: DEC. 1982

CAMP DRESSER & McKEE INC.

environmental engineers, scientists, planners & management consultants

CDM

ANNA-MARIA ISLAND
16" RELIEF WATER MAIN PHASE II
FOR THE
MANATEE COUNTY UTILITIES DEPARTMENT
BRIDGE PLAN & PROFILE

T22

PROJECT NO.
6049-7

SHEET NO.
D-1

28-02

AF 20333

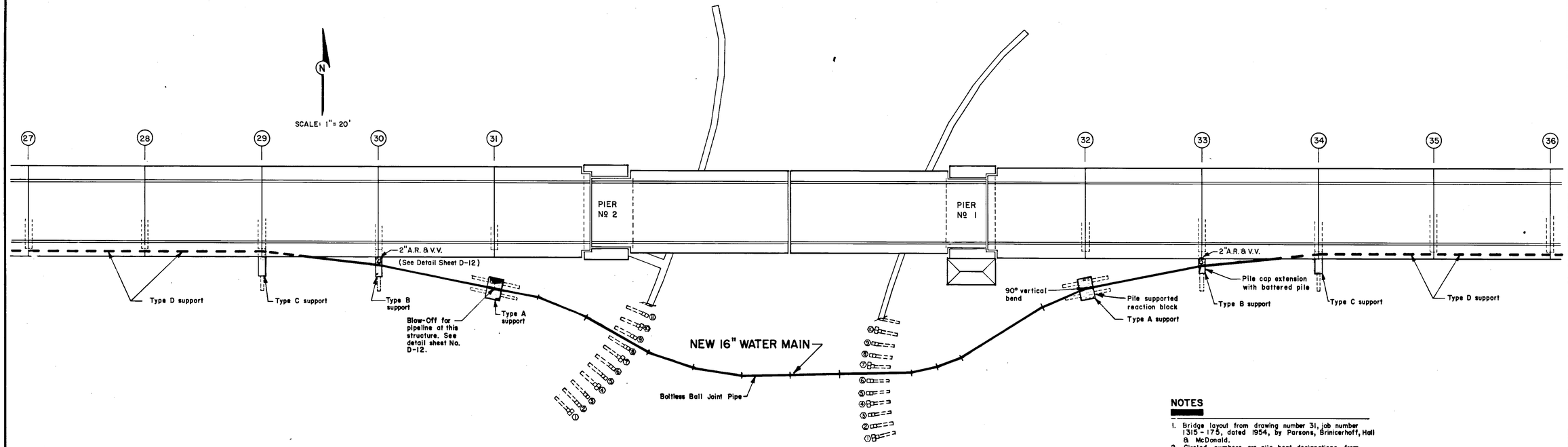

PLAN

NOTES

1. Bridge layout from drawing number 31, job number 1315 - 175, dated 1954, by Parsons, Brinicerhoff, Hall & McDonald.
2. Circled numbers are pile bent designations from sheet number D-1. Number in hexagons are fender pile group designations.
3. Fender system located from aerial photograph, sheet number D-4.

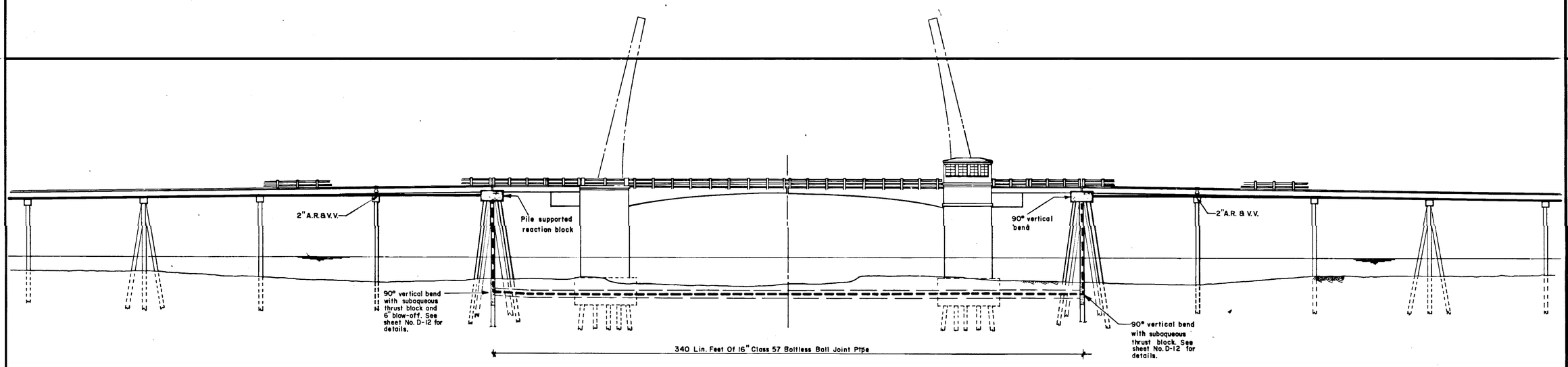

SOUTH ELEVATION

REV NO	DATE	DRWN	CHKD	REMARKS

DESIGNED BY: P.R.C.
DRAWN BY: N.J.H.
CHECKED BY:
APPROVED BY:
DATE: DEC. 1982

CAMP DRESSER & McKEE INC.

environmental engineers scientists planners & management consultants

CDM

ANNA-MARIA ISLAND
16" RELIEF WATER MAIN PHASE II
FOR THE
MANATEE COUNTY UTILITIES DEPARTMENT
BRIDGE PLAN & PROFILE DETAIL

T23

PROJECT NO.
6049-6-CE

SHEET NO.
D-2

28-02

AF 20333

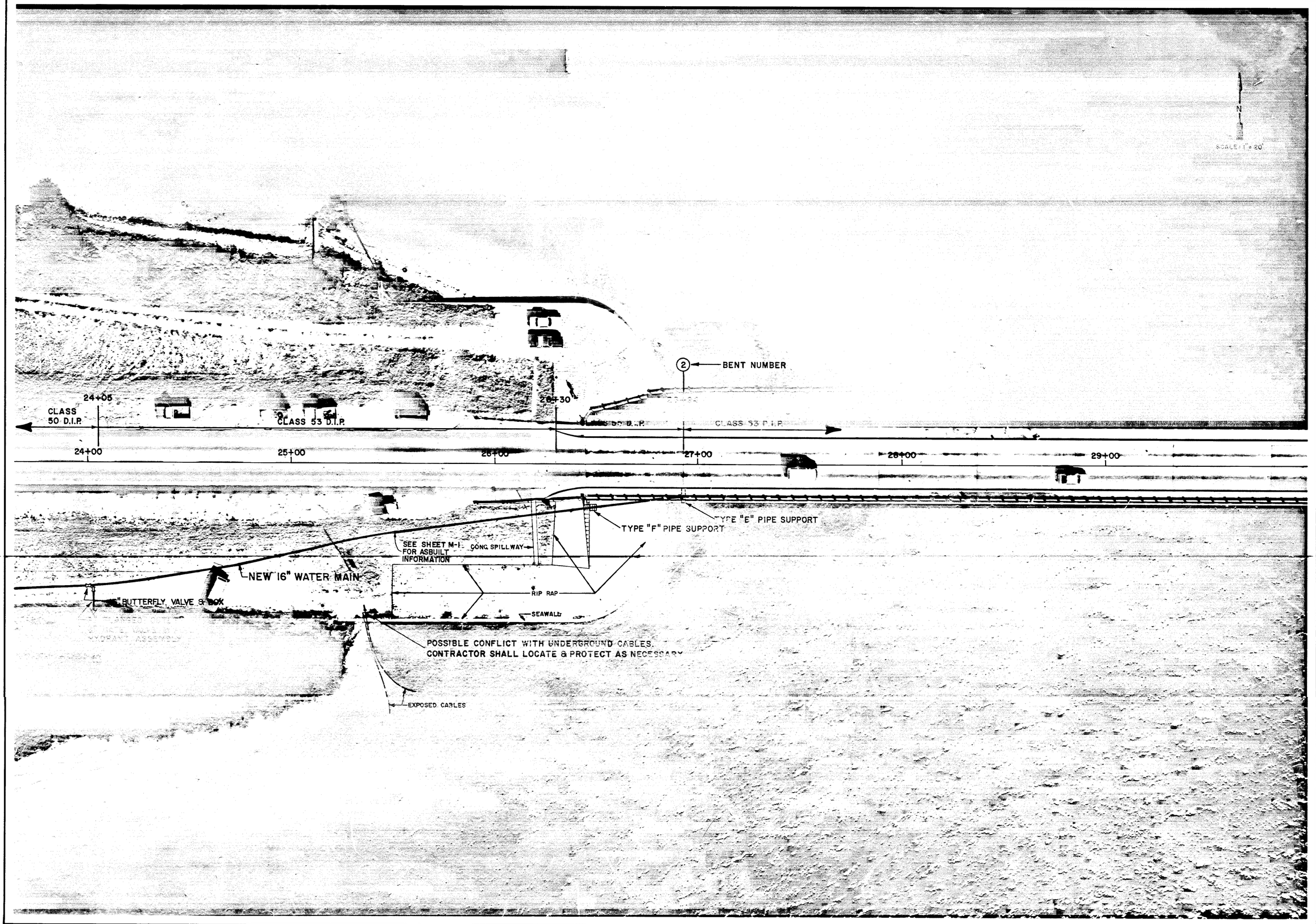

REV NO	DATE	DRWN	CHKD	REMARKS

DESIGNED BY PRC
DRAWN BY NJH
CHECKED BY
APPROVED BY
DATE DEC. 1982

CAMP DRESSER & McKEE INC.

CDM
environmental engineers, scientists, planners & management consultants

ANNA-MARIA ISLAND
16" RELIEF WATER MAIN PHASE II
FOR THE
MANATEE COUNTY UTILITIES DEPARTMENT

16" WATER MAIN-WEST ABUTMENT DETAIL

T24

PROJECT NO.
6049-7

SHEET NO.
D-3

28-02

AF 20233

NOTES

PLAN VIEW
PIPE ALIGNMENT DETAIL

REV NO	DATE	DRWN	CHKD	REMARKS

DESIGNED BY P.R.C.
DRAWN BY D.M.E.
CHECKED BY P.R.C.
APPROVED BY
DATE DEC. 1982

CAMP DRESSER & McKEE INC.
ENVIRONMENTAL ENGINEERS, SCIENTISTS, ARCHITECTS & PROJECT MANAGERS
CDM

ANNA-MARIA ISLAND
16" RELIEF WATER MAIN PHASE II
FOR THE
MANATEE COUNTY UTILITIES DEPARTMENT

16" WATER MAIN-BASCULE SECTION DETAIL

TRS

PROJECT NO.
6049-7

SHEET NO.
D-4

28-02

AF 20333

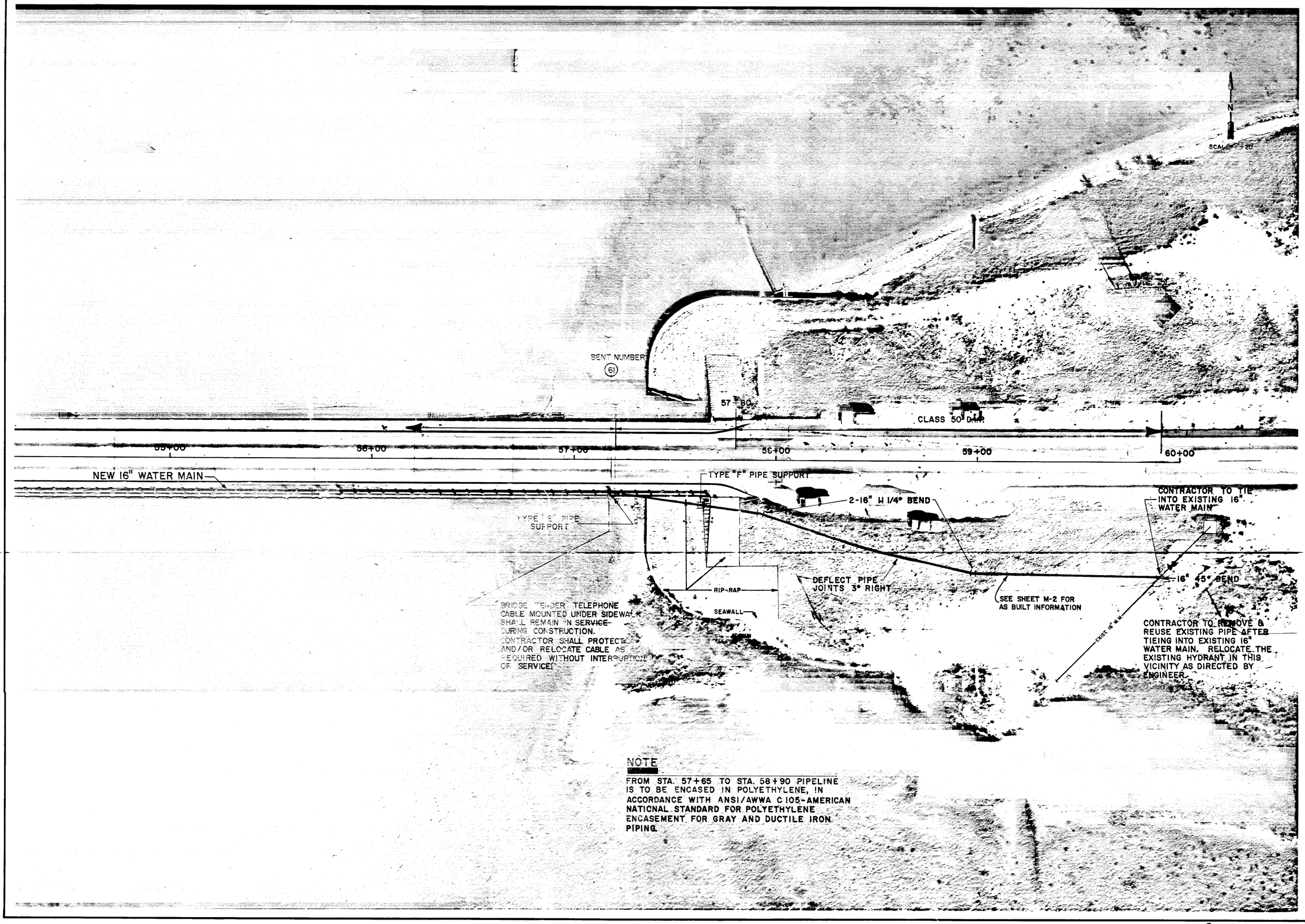

NOTE

FROM STA. 57+65 TO STA. 58+90 PIPELINE IS TO BE ENCASED IN POLYETHYLENE, IN ACCORDANCE WITH ANSI/AWWA C105-AMERICAN NATIONAL STANDARD FOR POLYETHYLENE ENCASEMENT FOR GRAY AND DUCTILE IRON PIPING.

REV NO	DATE	DRWN	CHKD	REMARKS

DESIGNED BY P.R.C.
DRAWN BY D.F.G.
CHECKED BY
APPROVED BY
DATE DEC. 1982

CAMP DRESSER & McKEE INC.

CDM
environmental engineers scientists
planners & management consultants

ANNA-MARIA ISLAND
16" RELIEF WATER MAIN PHASE II
FOR THE MANATEE COUNTY UTILITIES DEPARTMENT
16" WATER MAIN- EAST ABUTMENT DETAIL

T26

PROJECT NO.
6049-7

SHEET NO.
D-5

28-02

AF 20333

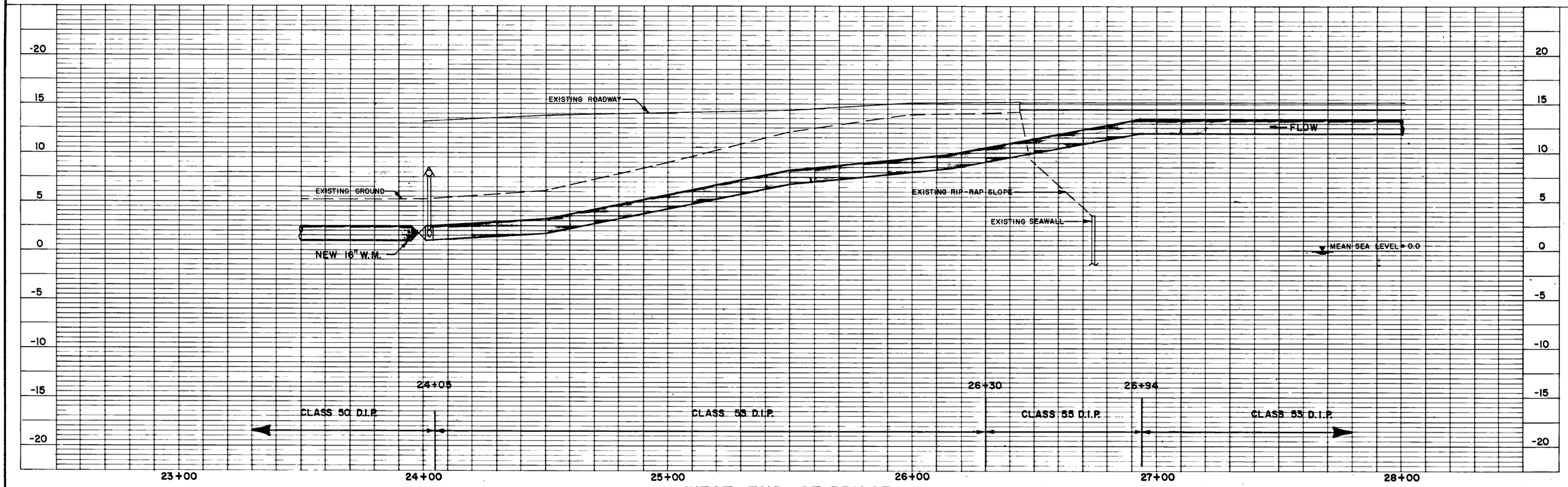

WEST END OF BRIDGE

SCALE: 1" = 20' HORIZONTAL
1" = 5' VERTICAL

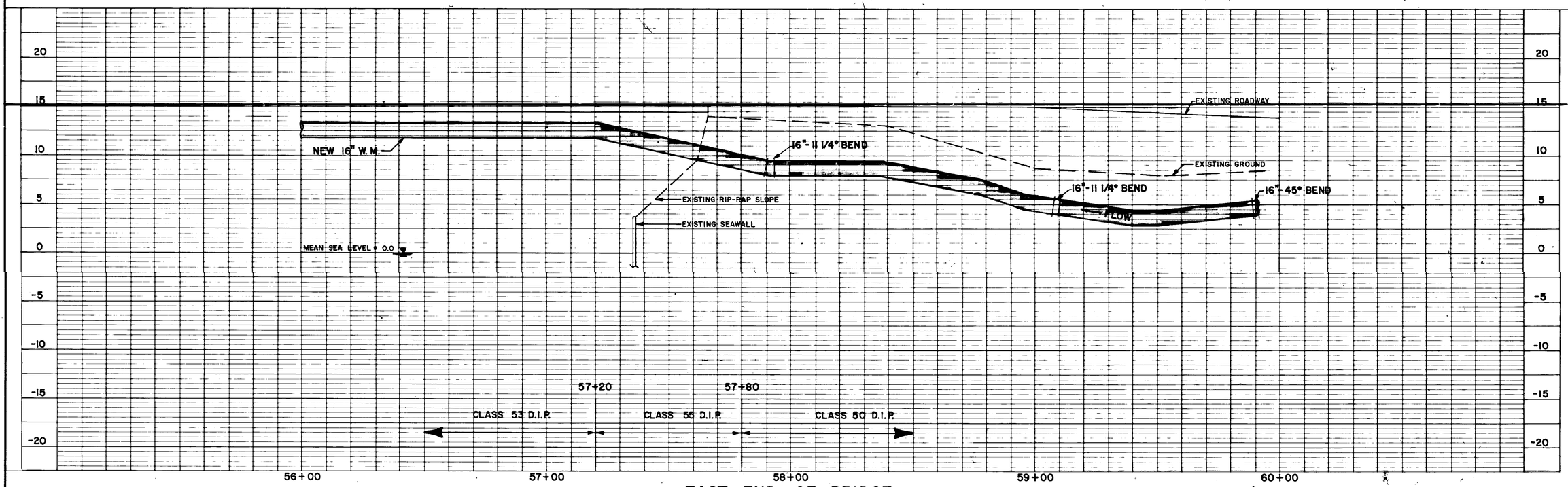

EAST END OF BRIDGE

SCALE: 1" = 20' HORIZONTAL
1" = 5' VERTICAL

REV NO	DATE	DRWN	CHKD	REMARKS

DESIGNED BY P.R.C.
DRAWN BY D.F.G.
CHECKED BY DKC
APPROVED BY
DATE DEC. 1982

CAMP DRESSER & McKEE INC.

CDM
environmental engineers & scientists
planners & management consultants

ANNA-MARIA ISLAND
16" RELIEF WATER MAIN PHASE II
FOR THE
MANATEE COUNTY UTILITIES DEPARTMENT

EAST & WEST ABUTMENT DETAIL - PROFILES

T27

PROJECT NO
6049-7

SHEET NO
D-6

28-02

AF 20333

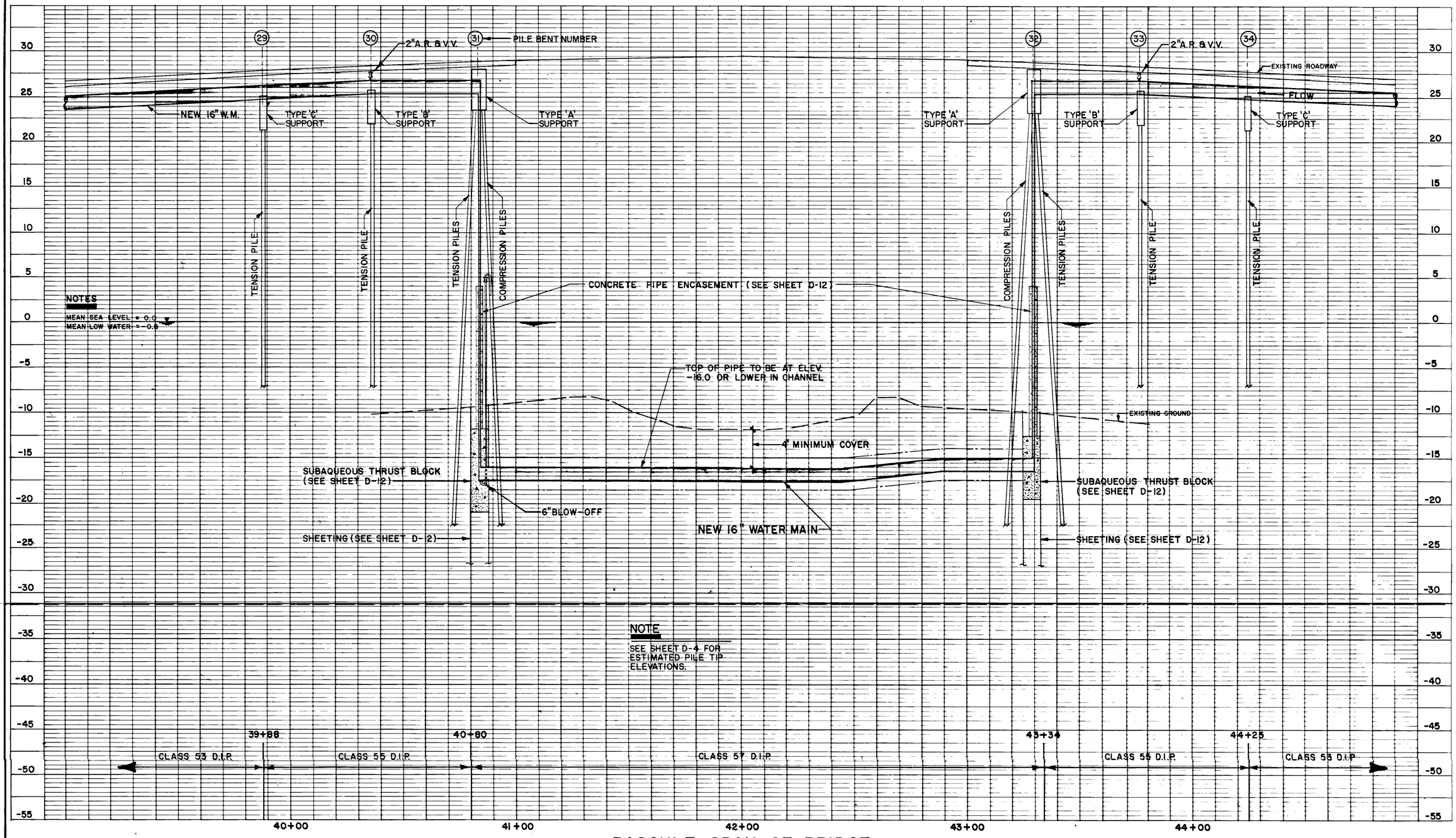

BASCULE SPAN OF BRIDGE

SCALE: 1" = 20' HORIZONTAL
1" = 5' VERTICAL

REV NO.	DATE	DRWN	CHKD	REMARKS

DESIGNED BY P.R.C.
DRAWN BY D.M.E.
CHECKED BY PRC
APPROVED BY
DATE DEC. 1982

CAMP DRESSER & McKEE INC.

environmental engineers scientists planners & management consultants **CDM**

ANNA-MARIA ISLAND
16" RELIEF WATER MAIN PHASE II
FOR THE
MANATEE COUNTY UTILITIES DEPARTMENT
BASCULE SECTION DETAIL - PROFILE

T28

PROJECT NO. 6049 - 7

SHEET NO. D-7

28-02

BILL OF REINFORCING STEEL					
MARK	SIZE	NO. REQ'D	LENGTH	LOCATION	BENDING
A	5	48	38'-7"	SLAB	SEE DIAGRAM
B	5	96	37'-10"	SLAB	SEE DIAGRAM
C	4	66	47'-8"	SLAB & CURBS	STRAIGHT
D	4	60	2'-7"	CURBS	SEE DIAGRAM

BENDING DIAGRAMS

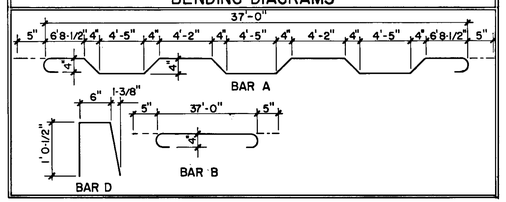

NOTES

1. DETAILS SHOWN ARE FROM DRAWING NUMBER 1 OF 4, INDEX 3597, SHEET NUMBER 24-C, PROJECT NUMBER 1315-175, DATED 1955, BY BRIDGE DIVISION, STATE ROAD DEPARTMENT OF FLORIDA.
2. DETAILS SHOWN ARE TO AID CONTRACTOR IN LOCATING ANCHORS FOR TYPE D SUPPORTS. NOTE THAT ACTUAL REINFORCING STEEL LOCATIONS MAY VARY FROM PLAN LOCATION. IT IS THE CONTRACTOR'S RESPONSIBILITY TO LOCATE STEEL IN VICINITY OF EACH ANCHOR LOCATION. ANCHORS TO MISS ALL REINFORCING STEEL. (SEE DETAILS & GENERAL NOTES.)
3. SEE PLANS & DETAILS FOR LOCATION OF NEW 16" WATER MAIN.

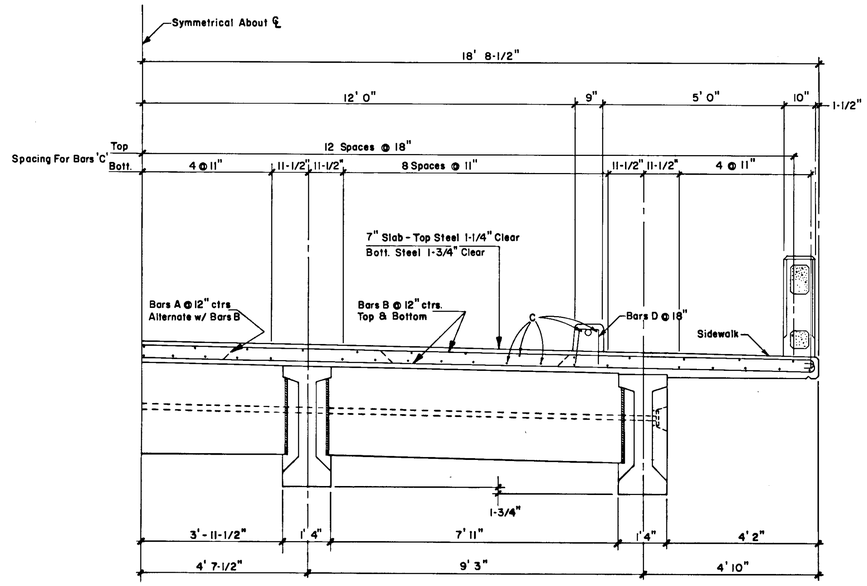

HALF TYPICAL SECTION THRU SPAN

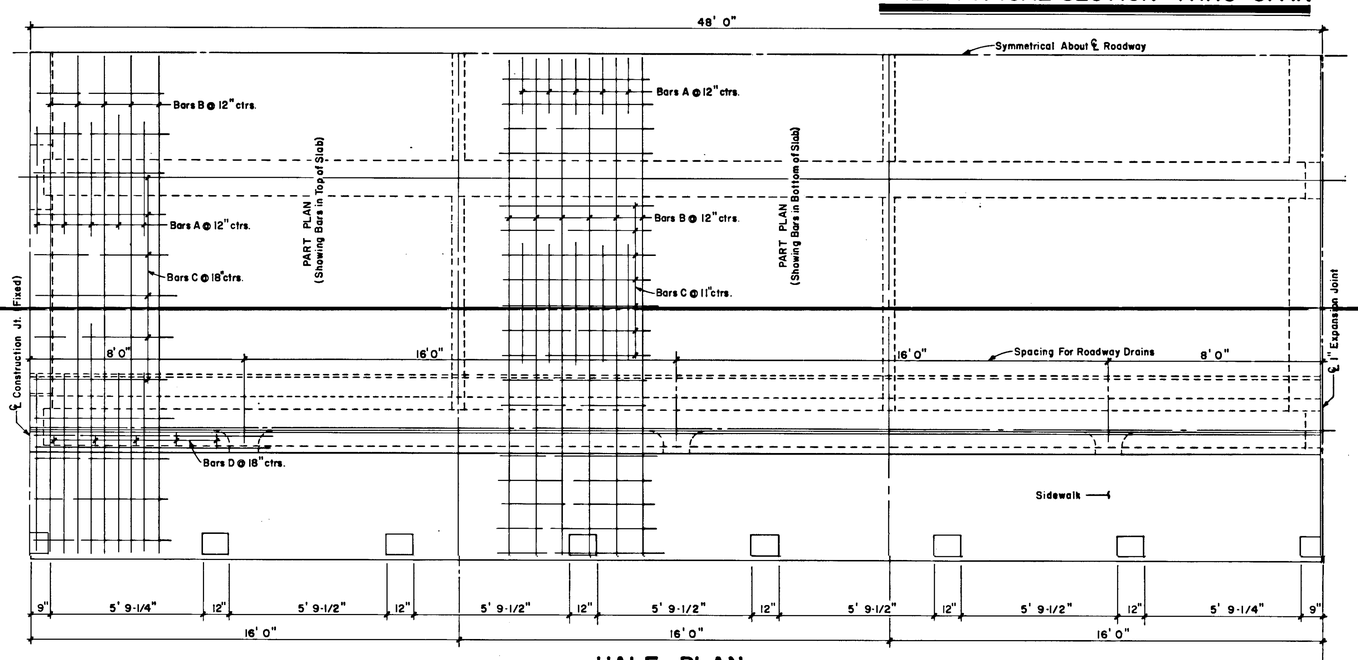

HALF PLAN

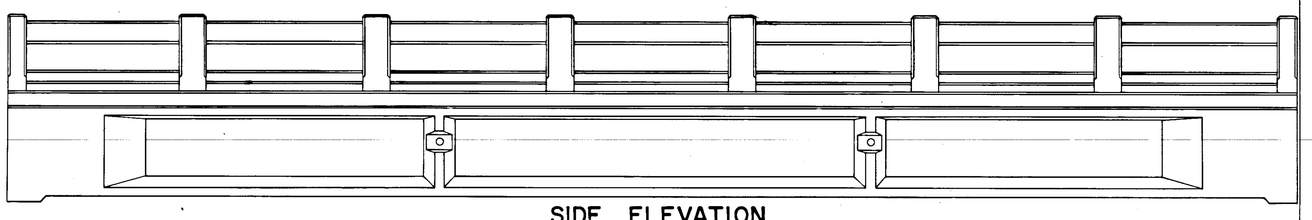

SIDE ELEVATION

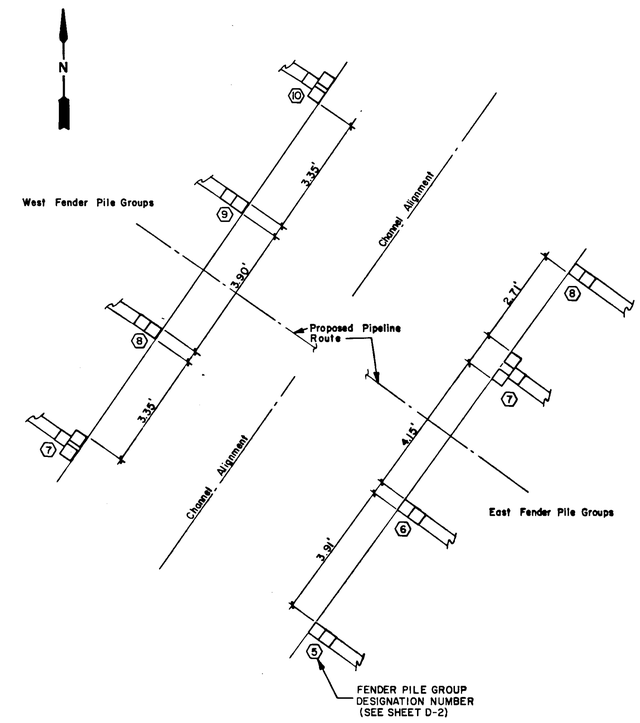

NOTE

CONTRACTOR SHALL USE SHEETING AND/OR SOLDIER PILING WITH SHORING TO PROTECT EXISTING FENDERS. HE SHALL PRESENT A PIPE INSTALLATION PLAN TO THE ENGINEER FOR APPROVAL FOR THE SUBAQUEOUS PIPELINE WHICH INCLUDES HIS PLANS TO PROTECT THE FENDER SYSTEM.

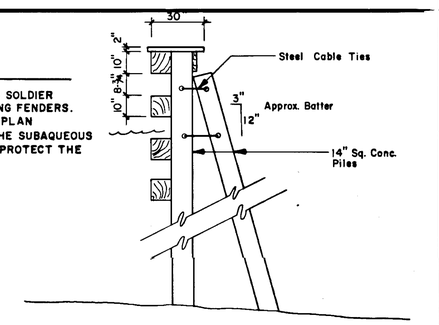

TYPICAL FENDER SECTION

FENDER DETAILS

N. T. S.

REV NO.	DATE	DRWN	CHKD	REMARKS

DESIGNED BY P.R.C.
DRAWN BY D.E.
CHECKED BY PRC
APPROVED BY RK
DATE DEC. 1982

CAMP DRESSER & McKEE INC.

CDM
environmental engineers, scientists, planners & management consultants

ANNA-MARIA ISLAND
16" RELIEF WATER MAIN PHASE II
FOR THE
MANATEE COUNTY UTILITIES DEPARTMENT
EXISTING BRIDGE AND FENDER DETAILS

T29

PROJECT NO. 6049-7

SHEET NO. D-8

28-02

AF 20333

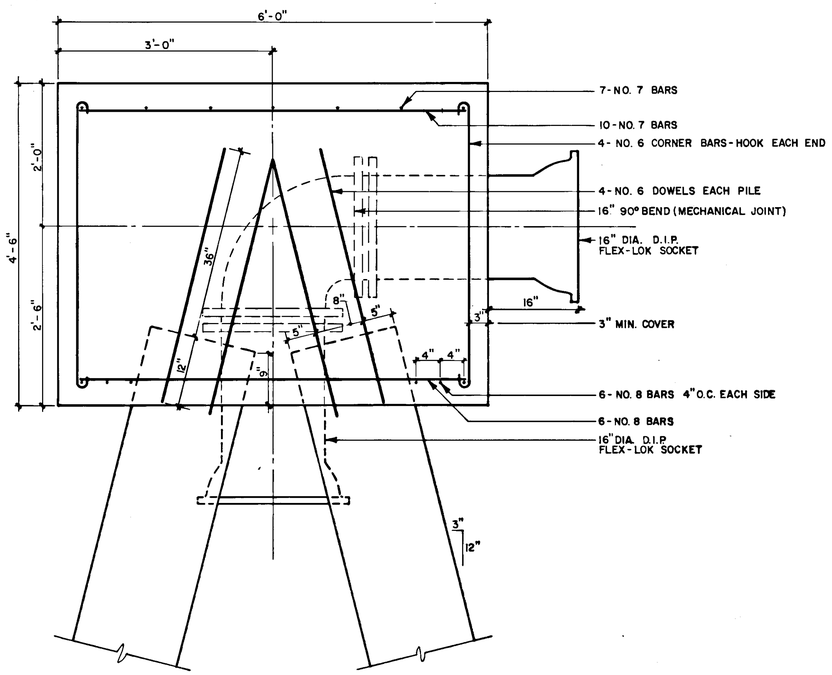

SIDE ELEVATION

N.T.S.

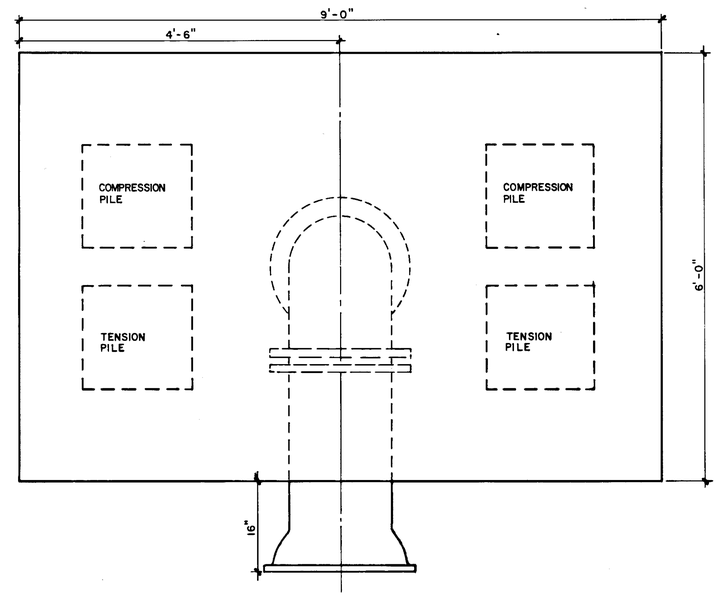

PLAN

N.T.S.

NOTES

FOR PIPE SUPPORT TYPES A, B, C, E AND F:

ALL REINFORCING STEEL TO BE EPOXY COATED GRADE 60 STEEL. ANY DAMAGE TO EPOXY COATING SHALL BE REPAIRED IN FULL. EPOXY COATING AND DAMAGE REPAIR SHALL BE ACCORDING TO CURRENT FDOT SPECIFICATIONS.

MINIMUM STEEL COVER SHALL BE 3".

PIPE LINE SHALL BE TIGHTLY WRAPPED IN 0.008" POLYETHYLENE THROUGH PIPE SUPPORT OR PILE SUPPORTED THRUST BLOCK. AFTER CONCRETE FORMS ARE STRIPPED, TRIM EXCESS POLYETHYLENE FLUSH WITH CONCRETE SURFACE.

MECHANICAL JOINT FITTINGS SHALL BE FULLY RESTRAINED. ALL CONCRETE FOR PIPE SUPPORT TYPES A, B, C, E AND F SHALL BE 3500 PSI MINIMUM AT 28 DAYS OR AT TIME OF PIPE PRESSURE TEST IF BEFORE 28 DAYS

EXISTING CONCRETE SURFACES SHOULD BE ROUGHENED AND CLEANED PRIOR TO APPLICATION OF EPOXY BONDING AGENT.

FOR ALL PILINGS (FOR PIPE SUPPORT TYPES A, B, AND C):

TENSION PILES TO BE 18" SQUARE FDOT PRESTRESSED COMPOSITE PILE CONSTRUCTED AS SHOWN ON LATEST FDOT INDEX MODIFIED TO INCLUDE 2" STEEL PLATE AS SHOWN IN DETAIL 'A' BELOW.

COMPRESSION PILES TO BE 18" SQUARE FDOT PRESTRESSED CONCRETE AS SHOWN ON LATEST FDOT INDEX.

NO. 6 DOWELS IN PILES TO BE INSTALLED IN 1" DIAMETER HOLES DRILLED 12" DEEP. EPOXY GROUT TO BE AS SPECIFIED BY FDOT. DOWELS TO CLEAR PRESTRESSED STRANDS.

SEE SHEET NO. D-4 FOR ESTIMATED PILE TIP ELEVATIONS.

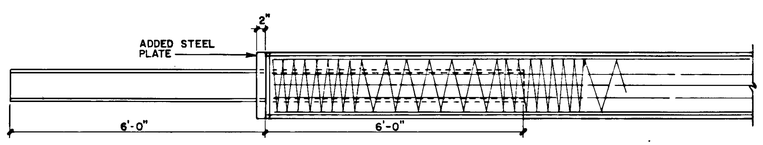

NOTE

BUILT-UP STEEL H SECTION SHALL EXTEND THROUGH 2" STEEL PLATE AND WELDED ON ALL FACES. SHOP DRAWINGS REQUIRED.

DETAIL 'A' (COMPOSITE PILE)

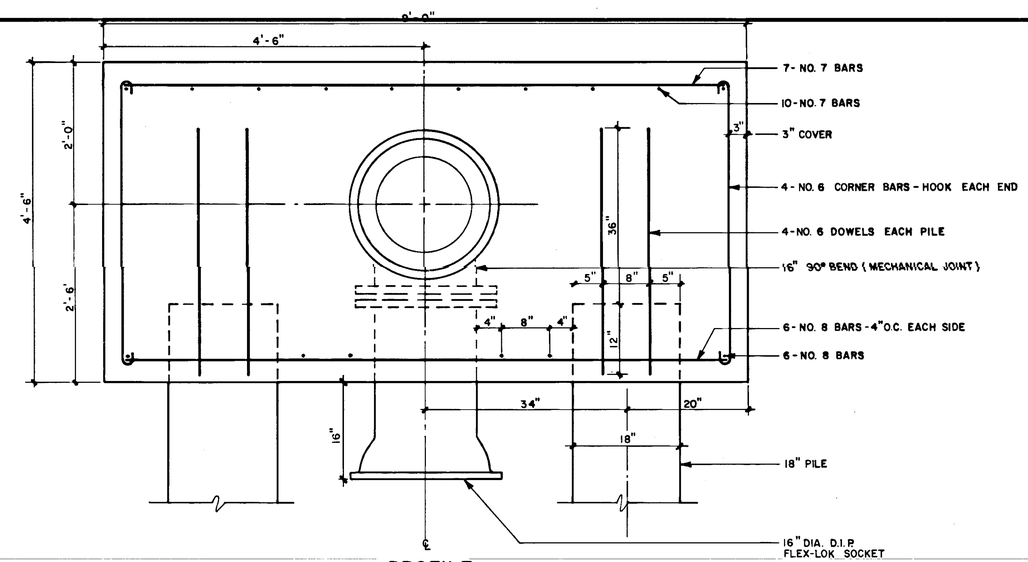

PROFILE

N.T.S.

PIPE SUPPORT TYPE 'A'

REV NO	DATE	DRWN	CHKD	REMARKS

DESIGNED BY P.R.C.
DRAWN BY N.J.H.
CHECKED BY
APPROVED BY
DATE DEC. 1982

CAMP DRESSER & McKEE INC.

CDM
environmental engineers, scientists, planners & management consultants

ANNA-MARIA ISLAND
16" RELIEF WATER MAIN PHASE II
FOR THE MANATEE COUNTY UTILITIES DEPARTMENT
TYPE 'A' PIPE SUPPORT & PILE DETAILS

T30

PROJECT NO. 6049-7

SHEET NO. D-9

28-02

AF 20333

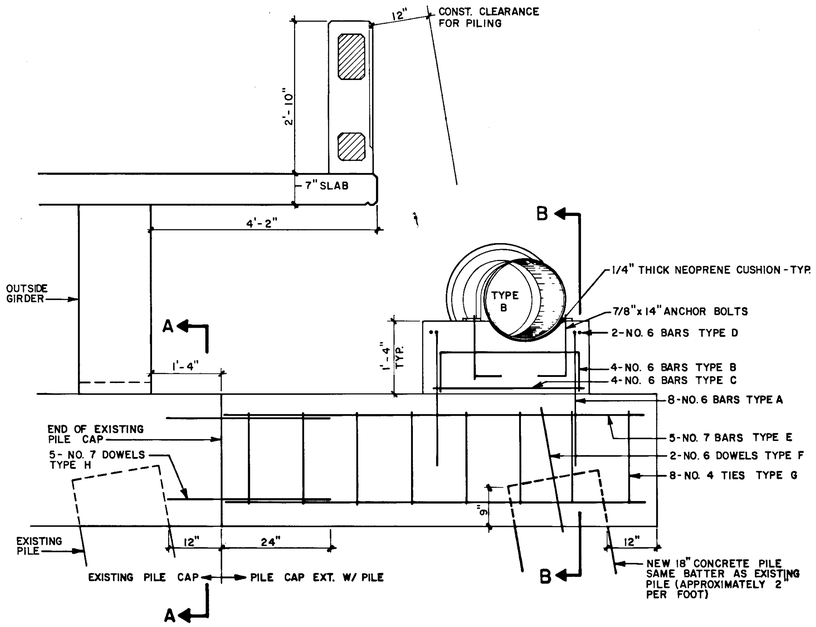

ELEVATION OF PIPE SUPPORT TYPE 'B'

N.T.S.

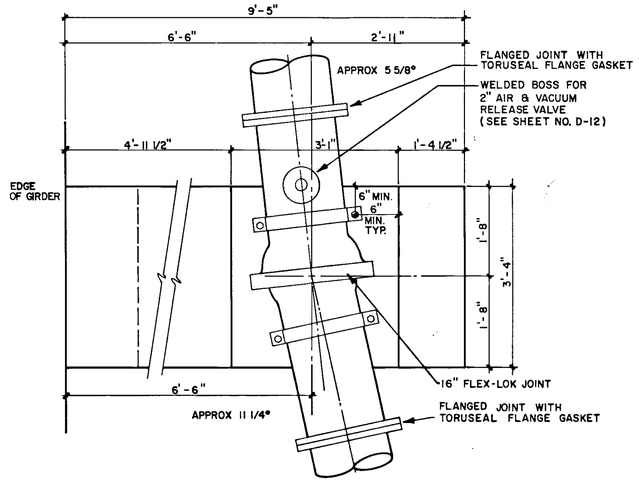

PLAN VIEW PIPE SUPPORT TYPE 'B'

N.T.S.

BILL OF REINFORCING STEEL

MARK	SIZE	NO. REQ'D.	LENGTH	LOCATION	BENDING
A	6	8	36"	PILE CAP	SEE DIAGRAM
B	6	4	48"	SADDLE	" "
C	6	4	31"	"	STRAIGHT
D	6	2	34"	"	"
E	7	5	92"	PILE CAP	"
F	6	2	36"	" "	SEE DIAGRAM
G	4	8	98"	" "	" "
H	7	5	36"	" "	STRAIGHT
I	6	4	17"	SADDLE	SEE DIAGRAM
J	6	4	36"	PILE CAP	" "

BENDING DIAGRAM

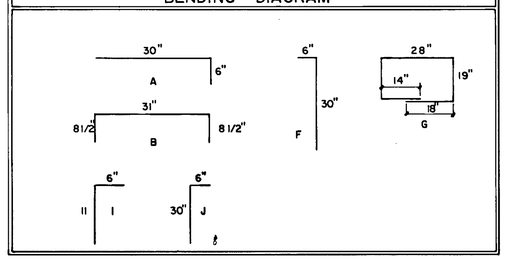

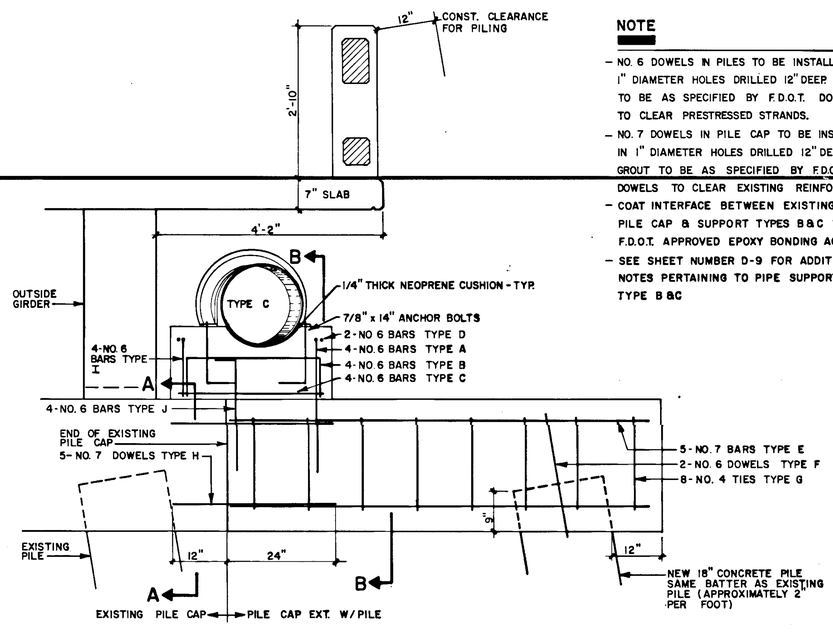

ELEVATION OF PIPE SUPPORT TYPE 'C'

N.T.S.

NOTE

- NO. 6 DOWELS IN PILES TO BE INSTALLED IN 1" DIAMETER HOLES DRILLED 12" DEEP. GROUT TO BE AS SPECIFIED BY F.D.O.T. DOWELS TO CLEAR PRESTRESSED STRANDS.
- NO. 7 DOWELS IN PILE CAP TO BE INSTALLED IN 1" DIAMETER HOLES DRILLED 12" DEEP. GROUT TO BE AS SPECIFIED BY F.D.O.T. DOWELS TO CLEAR EXISTING REINFORCING.
- COAT INTERFACE BETWEEN EXISTING PILE CAP & SUPPORT TYPES B & C WITH F.D.O.T. APPROVED EPOXY BONDING AGENT.
- SEE SHEET NUMBER D-9 FOR ADDITIONAL NOTES PERTAINING TO PIPE SUPPORTS TYPE B & C

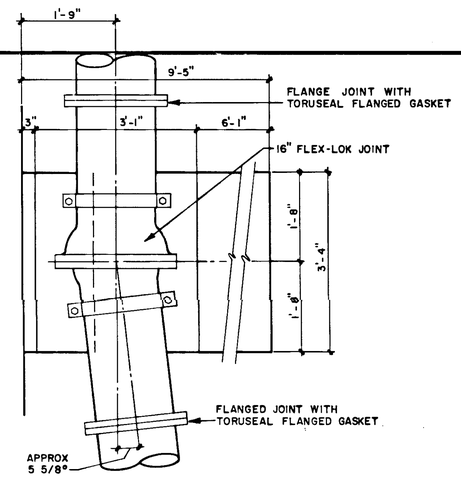

PLAN VIEW PIPE SUPPORT TYPE 'C'

N.T.S.

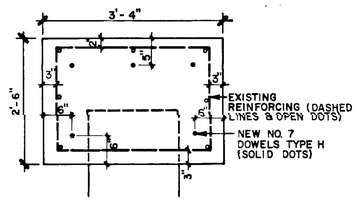

NOTE

SHOWS EXISTING REINFORCING AND NEW DOWEL LOCATIONS.

EXISTING REINFORCING LOCATIONS ARE TAKEN FROM DRAWING NO. 4 OF 4, INDEX NO. 3597, SHEET NO. 26, PROJECT NO. 1315-175 DATED 1955, AS REVISED IN 1956, BRIDGE DIVISION, STATE ROAD DEPARTMENT OF FLORIDA.

SECTION A-A

N.T.S.

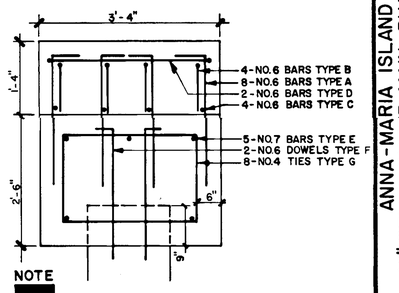

NOTE

IN TYPE 'C' SUPPORT, 4 OF THE TYPE 'A' BARS WILL BE REPLACED WITH 4 TYPE I BARS SUPPLEMENTED WITH 4 TYPE J BARS, EQUALLY SPACED AS SHOWN IN ELEVATION.

SECTION B-B

N.T.S.

REV NO	DATE	DRWN	CHKD	REMARKS

DESIGNED BY P.R.C.
DRAWN BY C.Q.D.
CHECKED BY
APPROVED BY
DATE DEC. 1982

CAMP DRESSER & McKEE INC.

CDM
environmental engineers, scientists, planners & management consultants

ANNA-MARIA ISLAND
16" RELIEF WATER MAIN PHASE II
FOR THE
MANATEE COUNTY UTILITIES DEPARTMENT

TYPE 'B' & 'C' PIPE SUPPORT DETAILS

T31

PROJECT NO. 6049-7

SHEET NO. D-10

28-02

AF 20333

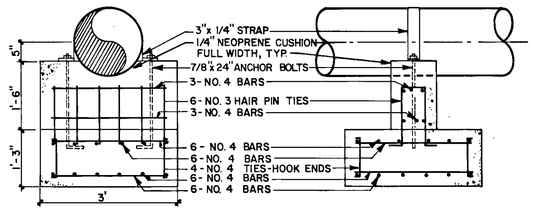

SECTION A-A

SECTION B-B

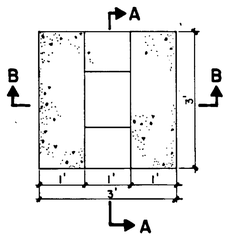

PIPE SUPPORT TYPE "F"

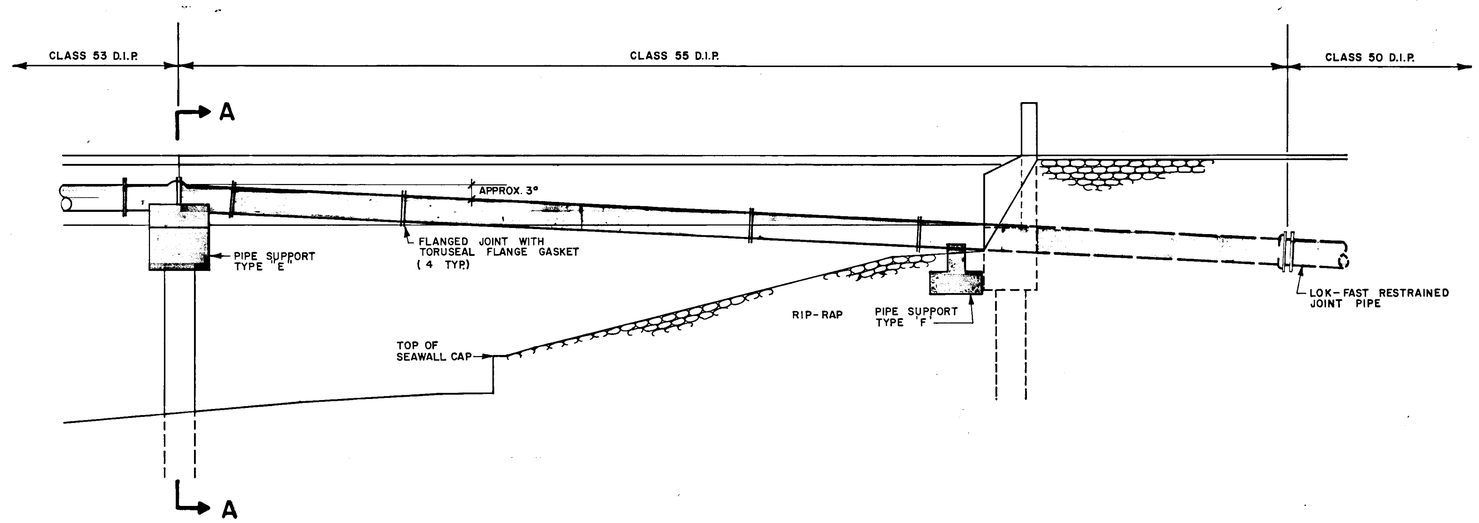

PIPE TRANSITION - EAST END OF BRIDGE

(SIMILAR BOTH ENDS)

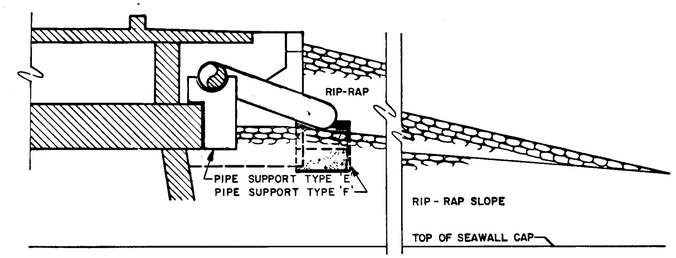

SECTION A-A

NOTE

SEE SHEET NUMBER D-9 FOR ADDITIONAL NOTES APPLICABLE TO TYPE E & F PIPE SUPPORTS.

CONTRACTOR SHALL TAKE PRECAUTIONS TO MINIMIZE DAMAGE TO RIP-RAP AT ENDS OF BRIGE. THIS SHALL INCLUDE SAWING RIP-RAP AND SHEETING OR OTHER APPROVED TRENCHING METHODS. RIP-RAP SHALL BE RECONSTRUCTED AS NEARLY AS PRACTICAL TO ORIGINAL APPEARANCE.

CONTRACTOR SHALL PROTECT "ANNA-MARIA BRIDGE" MONUMENT AT WEST END OF BRIDGE. IF DAMAGE IS LIKELY, THE MONUMENT SHALL BE REMOVED, STORED DURING CONSTRUCTION, AND REPLACED AFTER CONSTRUCTION IS COMPLETE.

SPILLWAY, EMBANKMENT, SIGN POSTS AND OTHER ITEMS WITHIN F.D.O.T. R/W DAMAGED DURING CONSTRUCTION SHALL BE REPAIRED BY CONTRACTOR TO ORIGINAL CONDITION OR BETTER.

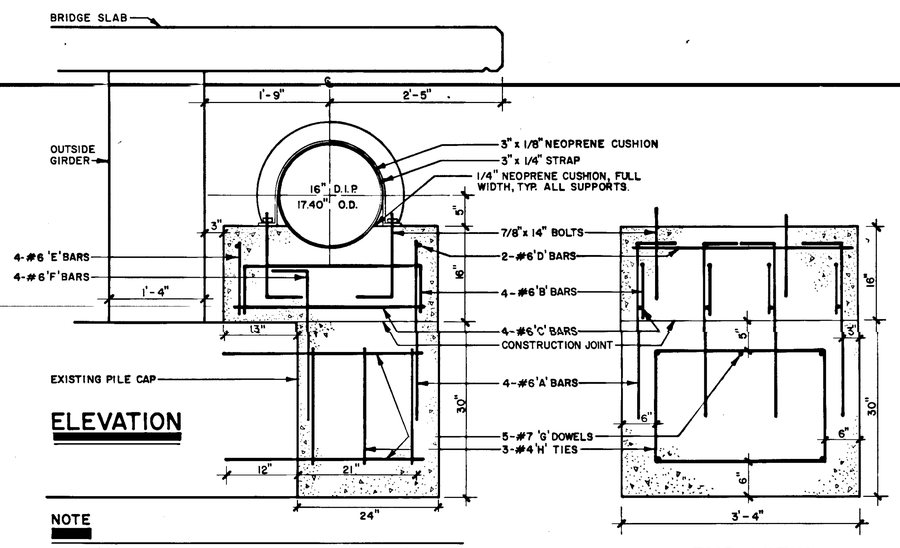

ELEVATION

END VIEW

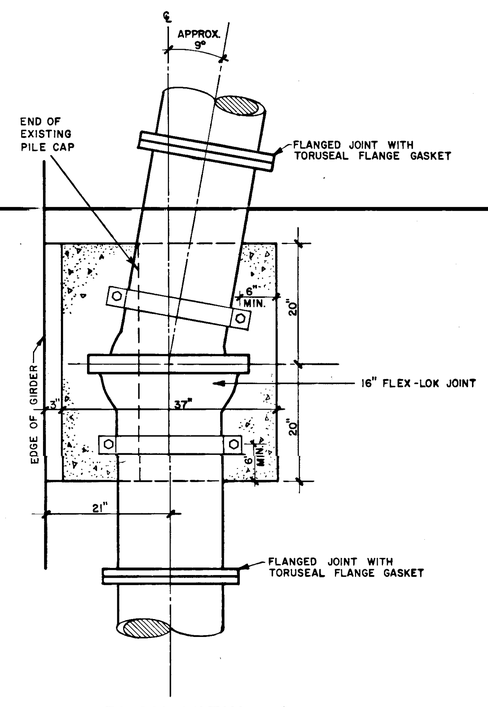

PLAN VIEW

NOTE

7/8" x 14" STRAP ANCHOR BOLTS SHALL BE NO CLOSER THAN 6" TO EDGE OF PIPE SUPPORT.

EITHER PIPE SUPPORT SHALL BE CAST WITH PIPE IN PLACE OR PIPE SHALL BE SET IN APPROVED NON-SHRINK GROUT FOR FIT

DOWELS EMBEDDED 12" INTO 1" PREDRILLED HOLE WITH FDOT APPROVED EPOXY GROUT. SEE SHEET D-8 FOR EXISTING REINFORCING LAYOUT.

COAT INTERFACE BETWEEN EXISTING PILE CAP AND SUPPORT TYPE 'E' WITH F.D.O.T. APPROVED EPOXY BONDING AGENT. CONCRETE SURFACES SHOULD BE ROUGHENED AND CLEANED PRIOR TO APPLICATION.
ANCHOR BOLTS AND METAL STRAPS SHALL BE 316 STAINLESS STEEL ACCORDING TO SPECIFICATIONS. ANCHOR BOLTS SHALL BE NO CLOSER THAN 6" TO EDGE OF CONCRETE.

PIPE SUPPORT TYPE 'E'

BILL OF REINFORCING STEEL

MARK	SIZE	NO. REQ'D	LENGTH	LOCATION	BENDING
A	6	4	44"	PILE CAP	SEE DIAGRAM
B	6	4	47"	SADDLE	SEE DIAGRAM
C	6	4	31"	SADDLE	STRAIGHT
D	6	2	34"	SADDLE	STRAIGHT
E	6	4	17"	SADDLE	SEE DIAGRAM
F	6	4	27"	PILE CAP	SEE DIAGRAM
G	7	5	33"	PILE CAP	STRAIGHT
H	4	3	98"	PILE CAP	SEE DIAGRAM

BENDING DIAGRAMS

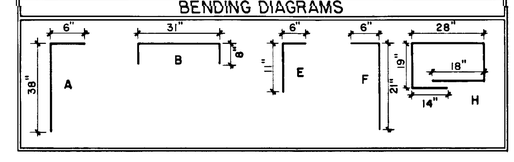

REV NO	DATE	DRWN	CHKD	REMARKS

DESIGNED BY P.R.C.
DRAWN BY A.L.S.
CHECKED BY
APPROVED BY
DATE DEC. 1982

CAMP DRESSER & McKEE INC.
environmental engineers, scientists, planners & management consultants
CDM

ANNA-MARIA ISLAND
16" RELIEF WATER MAIN PHASE II
FOR THE MANATEE COUNTY UTILITIES DEPARTMENT
TYPE "E" & "F" PIPE SUPPORTS & ABUTMENT DETAILS

T32

PROJECT NO. 6049-7

SHEET NO. D-11

28-02

AF 20333

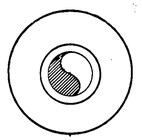

SECTION A'-A' AT BENT NO. 32

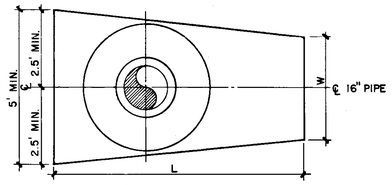

SECTION B'-B' AT BENT NO. 32

NOTE

L MINIMUM PRACTICAL LENGTH TO ENCASE TEE AT BENT NO. 31 OR ELBOW AT BENT NO. 32. LENGTH MUST BE ADJUSTED TO CLEAR RISER ENCASEMENT.

W MINIMUM PRACTICAL WIDTH TO CLEAR PIPE AND RISER ENCASEMENT.

THRUST BLOCK SHALL BE DIMENSIONED SO THAT IT WILL NOT INTERFER WITH STRUCTURE & PILE SUPPORTS.

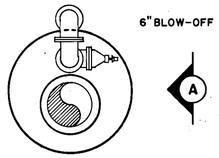

SECTION A-A AT BENT NO. 31

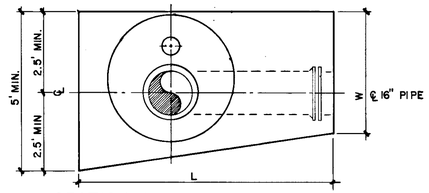

SECTION B-B AT BENT NO. 31

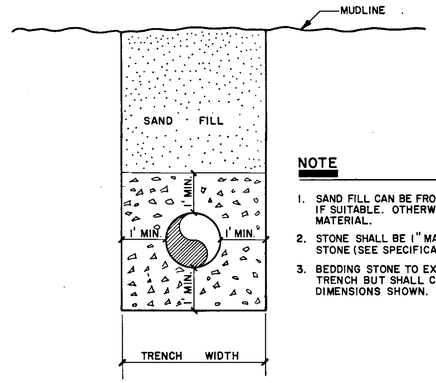

NOTE

1. SAND FILL CAN BE FROM TRENCH EXCAVATION IF SUITABLE. OTHERWISE SUPPLY SUITABLE MATERIAL.
2. STONE SHALL BE 1" MAXIMUM SIZE CRUSHED STONE (SEE SPECIFICATIONS)
3. BEDDING STONE TO EXTEND FULL WIDTH OF TRENCH BUT SHALL CONFORM TO MINIMUM DIMENSIONS SHOWN.

SPECIAL BEDDING DETAIL

(FOR SUBAQUEOUS PIPE)

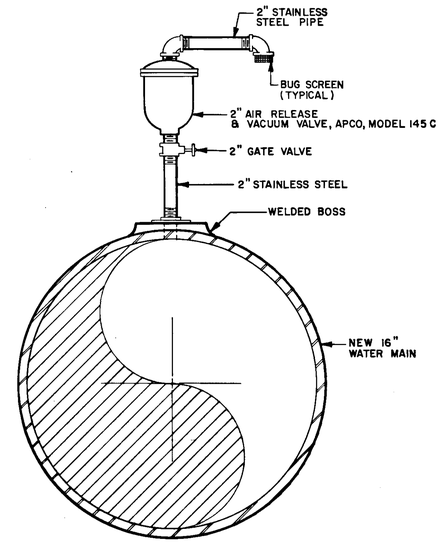

2" AIR RELEASE AND VACUUM VALVE

N.T.S.

(LOCATED AT TYPE 'B' SUPPORTS)

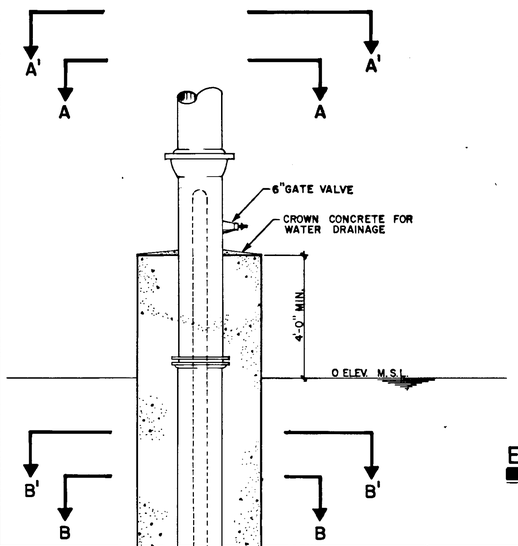

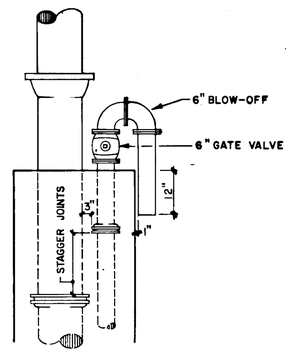

ELEVATION A

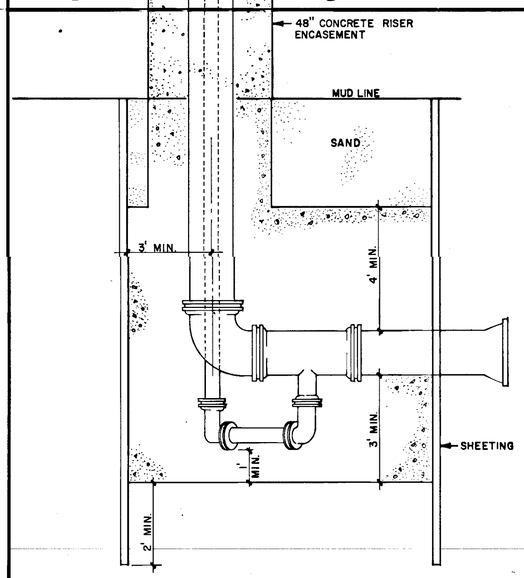

NOTE

1. APPROVED STEEL SHEETING SHALL BE USED. SHEETING ON THURST SIDE SHALL REMAIN IN PLACE.
2. CONCRETE SHALL BE 3500 psi. DESIGN STRENGTH 'SEAL' CONCRETE. CONCRETE SHALL BE PLACED BY APPROVED TREMIE METHOD OR CONCRETE PUMP.
3. ANY PROPOSED CONSTRUCTION JOINTS SHALL HAVE APPROVED DOWELS EXTENDING BETWEEN POURS.
4. CONTRACTOR SHALL NOT DEWATER THRUST BLOCK ENCLOSURE.
5. SHOP DRAWINGS REQUIRED FOR PIPING, SHEET PILE & BRACING, LAYOUT AND THURST BLOCKS DETAILS FOR BOTH LOCATIONS. CONTRACTOR TO SUBMIT DESIGN CALCULATIONS FOR SHEETIND AND BRACING.
6. STEEL SHEET PILING TO EXTEND REQUIRED DISTANCE BELOW PROPOSED THURST BLOCK TO ENSURE STABILITY OF EXCAVATION AND SHALL BE BRACED AS NECESSARY FOR SAFETY.

SUBAQUEOUS THRUST BLOCK, RISER, & BLOW-OFF DETAILS

GENERAL NOTES FOR TYPE 'D' SUPPORT

1. TYPE 'D' SUPPORT SHALL HAVE A MAXIMUM SPACING OF 8 FEET (BENTS 2 TO 29 & 34 TO 61)
2. NO TYPE 'D' SUPPORT SHALL BE PLACED CLOSER THAN 18 INCHES TO A PIPE JOINT EXCEPT AS DETAILED.
3. NO ANCHORS SHALL BE PLACED CLOSER THAN 18 INCHES TO A TRANSVERSE JOINT IN THE BRIDGE SIDEWALK.
4. CONTRACTOR TO PREPARE A SUPPORT INSTALLATION AND LOCATION PLAN FOR APPROVAL BY THE ENGINEER. PLAN SHALL INCLUDE DRAWINGS SHOWING LOCATION OF ALL PIPE JOINTS, PIPE FITTINGS, PIPE APPURTENANCES, JOINTS IN SIDEWALK, AND PROPOSED ANCHOR LOCATIONS.
5. ANCHORS TO MISS EXISTING REINFORCING STEEL. PILOT HOLES APPROXIMATELY 1/4 INCH IN DIAMETER SHALL BE DRILLED FULL DEPTH OF ANCHOR HOLE TO HELP INSURE MISSING EXISTING REBARS. IN THE EVENT THAT THE EXISTING REBAR IS HIT DURING THE DRILLING OPERATION, THE HOLE SHALL BE FILLED WITH APPROVED EPOXY IN AN APPROVED MANNER AND THE LOCATION SHIFTED LONGITUDINALLY A FEW INCHES TO INSURE MISSING THE REBAR.
6. ANCHORS SHALL BE KWIK-BOLTS AS MANUFACTURED BY HILTI FASTENING SYSTEMS, STANFORD, CONN. OR EQUAL. ANCHOR BOLTS, NUTS, AND WASHERS SHALL BE 316 STAINLESS STEEL ALL-THREAD UP TO ANCHOR. THEY SHALL BE INSTALLED AS RECOMMENDED BY MANUFACTURER.
7. PIPE HANGERS SHALL BE AS MANUFACTURED BY I.T.T. GRINNELL, TAMPA, FLA. OR EQUAL. HANGER, BOLT AND NUTS SHALL BE 316 STAINLESS STEEL. PIPE ROLLER MAY BE 316 STAINLESS STEEL OR GALVANIZED ACCORDING TO F.D.O.T. SPECIFICATIONS. PIPE ROLLERS SHALL BE NEOPREME COATED. ROLLERS WILL BE SIZED OR CONSTRUCTED TO FIT 16" D.I.P. PLACE NYLON WASHERS BETWEEN DISSIMILAR METALS, IF GALVINIZED ROLLERS ARE USED.
8. NEOPREME PADS, 1/16" THICK, SHALL BE PLACED BETWEEN LATERAL BRACING AND BRIDGE GIRDERS. INSULATOR WASHINGS & BUSHINGS OF APPROVED DESIGN SHALL BE USED TO INSULATE PIPE HANGERS & LATERAL BRACING FROM ANCHOR BOLTS ATTACHED TO BRIDGE.
9. TYPE D-1 SUPPORT AS DETAILED ON SHEET NO. D-13 SHALL BE PROVIDED AT 48' MAXIMUM SPACING.

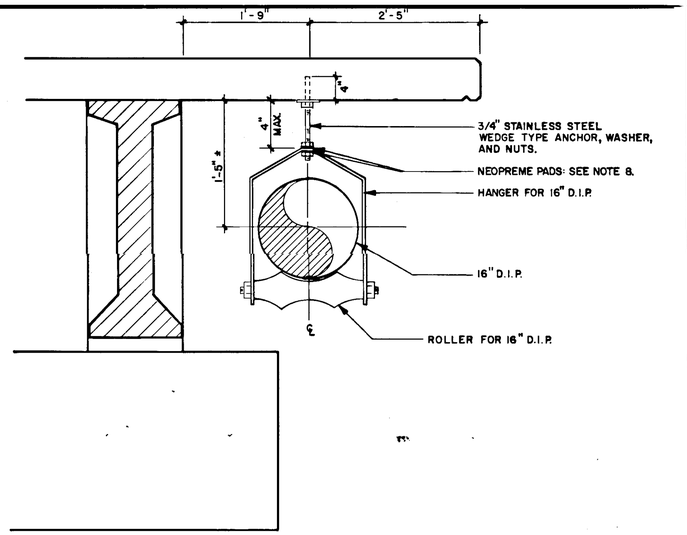

PIPE SUPPORT TYPE 'D'

N.T.S.

REV. NO.	DATE	DRWN	CHKD	REMARKS

DESIGNED BY P.R.C.
DRAWN BY D.M.E.
CHECKED BY
APPROVED BY
DATE DEC. 1982

CAMP DRESSER & McKEE INC.

CDM
environmental engineers, scientists, planners, & management consultants

ANNA-MARIA ISLAND
16" RELIEF WATER MAIN PHASE II
FOR THE
MANATEE COUNTY UTILITIES DEPARTMENT

TYPE 'D' PIPE SUPPORT & MISC. DETAILS

T33

PROJECT NO. 6049 - 7

SHEET NO. D-12

28-02

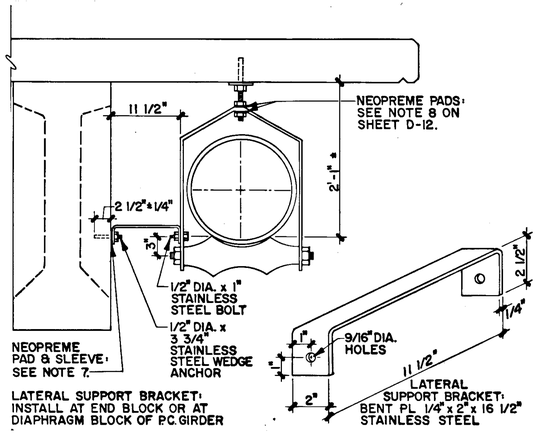

TYPE D-I SUPPORT DETAILS

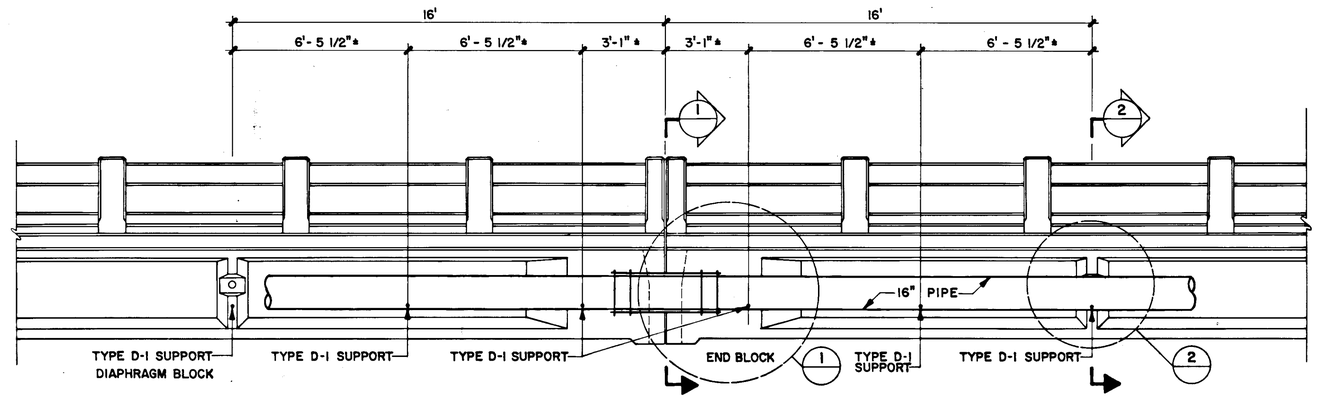

SIDE ELEVATION

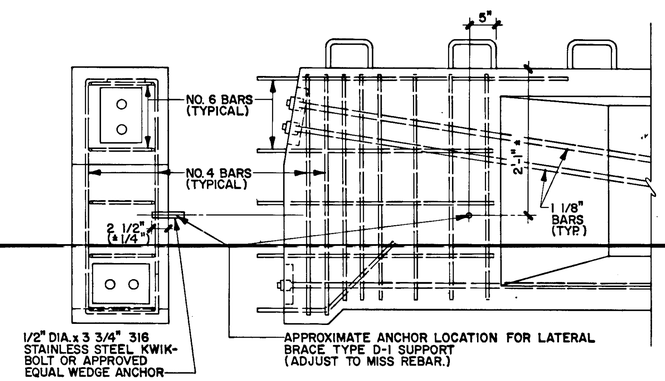

SECTION 1

DETAIL 1

NOTES

1. DETAILS SHOWN ARE FROM DRAWING NUMBERS 1 OF 4 AND 2 OF 4, INDEX 3597, SHEET NUMBER 24-C, PROJECT NUMBER 1315-175, DATED 1955, BY BRIDGE DIVISION, STATE ROAD DEPARTMENT OF FLORIDA.
2. DETAILS SHOWN ARE TO AID CONTRACTOR IN LOCATING ANCHORS FOR TYPE D-I SUPPORTS. NOTE THAT ACTUAL REINFORCING STEEL LOCATIONS MAY VARY FROM PLAN LOCATION. IT IS THE CONTRACTORS RESPONSIBILITY TO LOCATE STEEL IN VICINITY OF EACH ANCHOR LOCATION. ANCHORS TO MISS ALL REINFORCING STEEL. SEE DETAILS AND GENERAL NOTES.
3. SEE PLANS AND DETAILS FOR LOCATION OF NEW 16" WATER MAIN.
4. TYPE D-I SUPPORTS SHALL BE PROVIDED AT MAXIMUM 48' SPACING (IN LIEU OF TYPE D SUPPORTS) THEY SHALL BE PLACED NEAR PILE CAPS WITH BRACING ANCHOR ATTACHED TO END BLOCK OF GIRDER.
5. TWO TYPE D-I SUPPORTS SHALL ALSO BE PLACED AS DETAILED ON THIS SHEET AT EXPANSION JOINT LOCATIONS. (SEE "SIDE ELEVATION")
6. SEE SHEET D-12 FOR ADDITIONAL NOTES.
7. NEOPREME PAD & SLEEVE SLEEVE SHALL BE PROVIDED AT EACH TYPE D-I SUPPORTS AS INDICATED IN DETAIL, THIS SHEET.

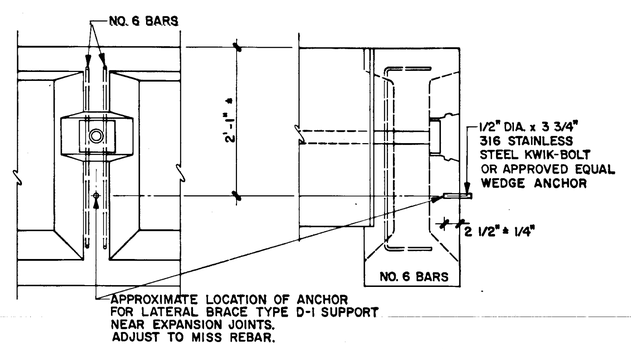

DETAIL 2

SECTION 2

REV NO	DATE	DRWN	CHKD	REMARKS

DESIGNED BY: P.R.C.
DRAWN BY: A.L.S.
CHECKED BY: PRC
APPROVED BY:
DATE: DEC. 1982

CAMP DRESSER & McKEE INC.
environmental engineers, scientists, planners & management consultants
CDM

ANNA-MARIA ISLAND
16" RELIEF WATER MAIN PHASE II
FOR THE
MANATEE COUNTY UTILITIES DEPARTMENT

TYPE 'D-I' PIPE SUPPORT & MISC. DETAILS

T34

PROJECT NO. 6049 - 7

SHEET NO. D-13

28-02

AF 20333

BORING NO. B-1

Job No 4406
Project Barge Borings - S.R. 64 - Intercoastal Waterway
Location As Directed — Foreman Chivington
Completion Depth 51.0' Date 12/5/82 — Depth To Water — Time — Date —

Depth, Ft.	Soil Description (Surf. Elev. Unknown)	Blows on Sampler per 6" or Pen. Str.
	Water	
-10	LOOSE gray fine SAND and shell -1	1/2/3
-15	LOOSE gray slightly silty to silty fine SAND with shell fragments	4/6/2
-20	VERY LOOSE to LOOSE gray silty fine SAND with shell fragments	12/4/1 2/0/1 1/1/1 2/1/2 2/1/2
-25	LOOSE gray fine SAND with shell fragments	2/3/3
-30	DENSE gray fine SAND with occasional shell fragments	6/11/22 13/18/21
-35	MEDIUM DENSE gray fine SAND with occasional shell fragments and traces of fines	9/7/9 4/5/10 7/8/14
-40	DENSE gray fine SAND	13/46/50* *5" Penetration 50 50* *5" Penetration
-45	DENSE gray fine SAND	41/50* *5" Penetration
-50	VERY DENSE cream colored variably cemented fine SAND with calcareous phosphatic clay and clayey fine sand	27/43/50* *4" Penetration 17/30/50* *5" Penetration 12/18/39 23/50
-65	Bottom of boring; -1 fragments with traces of gray silt	

Standard Penetration Test Blows/Ft. on 2" O.D. Sampler-140 LB. Hammer, 30" Drop (10 20 40 60 80)

Remarks — Casing Length

BORING NO. B-2

Job No 4406
Project Barge Borings - S.R. 64 - Intercoastal Waterway
Location As Directed — Foreman Fussell
Completion Depth 58.8' Date 12/5/82 — Depth To Water — Time — Date —

Depth, Ft.	Soil Description (Surf. Elev. Unknown)	Blows on Sampler per 6" or Pen. Str.
	Water	
-10	LOOSE to MEDIUM DENSE gray fine SAND	2/4/8 5/5/4
-15	VERY LOOSE to LOOSE gray to green silty to clayey fine SAND occasionally with shell fragments	2/2/2 5/2/3
-20		1/1/1 3/2/1
-25		2/1/1 2/2/3
-30	MEDIUM DENSE light gray to gray fine SAND with shells	3/4/7 12/12/8 7/9/12
-40	DENSE to VERY DENSE gray fine SAND with shell fragments	9/15/25 11/17/35 14/46/50* *5" Penetration 11/27/50* *5" Penetration 10/37/50* *5" Penetration 7/14/31
-55	DENSE to VERY DENSE cream colored calcareous clayey fine SAND and sandy clay	26/50* *4" Penetration 50* *4" Penetration 28/50 23/28/37
-65	Bottom of boring; -1 shell fragments	

Standard Penetration Test Blows/Ft. on 2" O.D. Sampler-140 LB. Hammer, 30" Drop (10 20 40 60 80)

Remarks — Casing Length

BORING NO. B-3

Job No 4406
Project Barge Borings - S.R. 64 - Intercoastal Waterway
Location As Directed — Foreman Fussell
Completion Depth 21.5' Date 12-9-82 — Depth To Water — Time — Date —

Depth, Ft.	Soil Description (Surf. Elev. Unknown)	Blows on Sampler per 6" or Pen. Str.
	Water	
-10	LOOSE gray green silty fine SAND with -1	3/4/4
-15	VERY LOOSE gray fine SAND with shell	7/2/2
-20	VERY LOOSE gray green silty to slightly clayey fine SAND with shell fragments	3/2/1 2/1/1 1/1/1 2/0/1
-25	VERY LOOSE to LOOSE gray fine SAND with traces of shell fragments	1/1/2 4/3/3
-30	DENSE gray fine SAND with shell fragments	8/12/33
	Bottom of boring; -1 shell fragments	

Standard Penetration Test Blows/Ft. on 2" O.D. Sampler-140 LB. Hammer, 30" Drop (10 20 40 60 80)

Remarks — Casing Length 30.0'

BORING NO. B-4

Job No 4406
Project Barge Borings - S.R. 64 - Intercoastal Waterway
Location As Directed — Foreman Fussell
Completion Depth 29.5' Date 12/2/82 — Depth To Water — Time — Date —

Depth, Ft.	Soil Description (Surf. Elev. Unknown)	Blows on Sampler per 6" or Pen. Str.
	Water	
-10	VERY DENSE gray fine SAND with shells	32/30/28
-15	LOOSE to MEDIUM DENSE gray fine SAND with shells	10/7/4 3/3/3
-20	VERY LOOSE to LOOSE gray slightly silty to silty fine SAND with shell fragments	5/3/2 2/1/1 2/0/1 1/1/2 2/4/3
-30	LOOSE gray fine SAND with shell fragments	6/4/5
	Bottom of boring;	

Standard Penetration Test Blows/Ft. on 2" O.D. Sampler-140 LB. Hammer, 30" Drop (10 20 40 60 80)

Remarks — Casing Length

BORING NO. B-5

Job No 4406
Project Barge Borings - S.R. 64 - Intercoastal Waterway
Location As Directed — Foreman Fussell
Completion Depth 61.1' Date 12/3/82 — Depth To Water — Time — Date —

Depth, Ft.	Soil Description (Surf. Elev. Unknown)	Blows on Sampler per 6" or Pen. Str.
	Water	
-10	LOOSE gray fine SAND with shell fragments	2/4/4
-15	LOOSE gray fine SAND with shell fragments	4/3/2
-20	VERY LOOSE gray to gray/green silty fine SAND with shell fragments	4/2/0 2/1/1 2/1/0 3/2/2
-25	LOOSE gray to light gray fine SAND with shell fragments	4/4/3 2/3/4
-30	MEDIUM DENSE to DENSE light gray fine SAND with traces of shell fragments	12/21/27 8/9/6
-35	MEDIUM DENSE gray fine SAND with shell fragments	7/7/7 4/7/6 5/9/15
-40	VERY DENSE light gray fine SAND with -1	11/50* *5" Penetration
-45	DENSE to VERY DENSE cream colored variably cemented calcareous clayey fine SAND and sandy clay	5/50* *5" Penetration 50
-50	DENSE to VERY DENSE cream colored variably cemented calcareous clayey fine SAND and sandy clay	15/38/50 29/50 44/50 15/42/50* *4" Penetration
-60	VERY DENSE gray phosphatic clayey fine -2	10/15/50* *2" Penetration
	Bottom of boring; -1 traces of shell fragments -2 SAND	

Standard Penetration Test Blows/Ft. on 2" O.D. Sampler-140 LB. Hammer, 30" Drop (10 20 40 60 80)

Remarks — Casing Length

BORING NO. B-6

Job No 4406
Project Barge Borings - S.R. 64 - Intercoastal Waterway
Location As Directed — Foreman Fussell
Completion Depth 62.2' Date 12/8/82 — Depth To Water — Time — Date —

Depth, Ft.	Soil Description (Surf. Elev. Unknown)	Blows on Sampler per 6" or Pen. Str.
	Water	
-15	VERY LOOSE to LOOSE gray silty fine SAND with shell fragments	3/3/3 2/1/1 1/1/1 2/1/1 1/0/1
-25	LOOSE gray slightly silty clayey fine -1	2/3/4
	MEDIUM DENSE gray fine SAND with shell -2	5/12/15
-30	MEDIUM DENSE to DENSE light gray fine SAND with traces of shell fragments	10/13/23 6/10/11 5/6/7
-40	MEDIUM DENSE to VERY DENSE gray and light gray fine SAND with traces of shell fragments	8/12/17 6/26/50 33/36/24
-45	HARD cream colored variably cemented calcareous phosphatic CLAY	7/17/50* *4" Penetration 50* *3" Penetration
-50	Rods fell - very soft	
-55	STIFF to HARD light gray to light green/gray variably cemented calcareous phosphatic CLAY	18/12/1 20/50 12/33/50* *4" Penetration
-60	VERY DENSE light brown to gray/green phosphatic clayey fine SAND and sandy clay	14/50 5/14/50* *3" Penetration
	Bottom of boring; -1 SAND with shell fragments -2 fragments	

Standard Penetration Test Blows/Ft. on 2" O.D. Sampler-140 LB. Hammer, 30" Drop (10 20 40 60 80)

Remarks — Casing Length

NOTES

1. SPT BORINGS BY NFS SERVICES, INC., CLEARWATER, FLORIDA.
2. WATER DEPTHS SHOWN ARE DEPTHS MEASURED AT TIME OF DRILLING AND ARE APPROXIMATE.
3. SEE SHEET M-2 FOR APPROXIMATE LOCATION OF BORINGS.
4. DILATOMER SOUNDINGS WERE MADE NEAR BORINGS B-2 AND B-4. INTERESTED PARTIES MAY REVIEW DATA BY CONTACTING ENGINEERS.
5. BORING LOGS FROM ORIGINAL BRIDGE PLANS AVAILABLE FOR INSPECTION BY INTERESTED PARTIES BY CONTACTING ENGINEERS.
6. CONTRACTOR RESPONSIBLE FOR OWN INTERPRETATION OF SOILS DATA (SEE SPECIFICATIONS). ENGINEER ASSUMES NO LIABILITY FOR THE CONTRACTOR'S INTERPRETATION.
7. CONTRACTOR SHALL OBTAIN ADDITIONAL SOIL BORINGS OR DATA AT HIS OWN COST IF HE DEEMS NECESSARY FOR BIDDING OR CONSTRUCTION. (SEE SPECIFICATIONS)

REV NO.	DATE	DRWN	CHKD	REMARKS

DESIGNED BY: P.R.C.
DRAWN BY: D.E.G.
CHECKED BY:
APPROVED BY:
DATE: DEC. 1982

CAMP DRESSER & McKEE INC.
environmental engineers, scientists, planners & management consultants
CDM

ANNA-MARIA ISLAND
16" RELIEF WATER MAIN PHASE II
FOR THE
MANATEE COUNTY UTILITIES DEPARTMENT
BORING LOGS

T35

PROJECT NO. 6049-7

SHEET NO. B-1

28-02