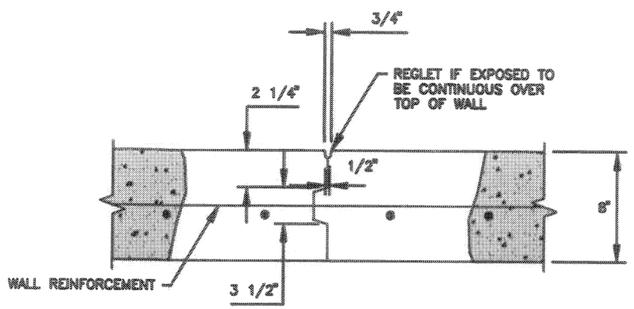

1 WALL CONSTRUCTION JOINT DETAIL
N.T.S.

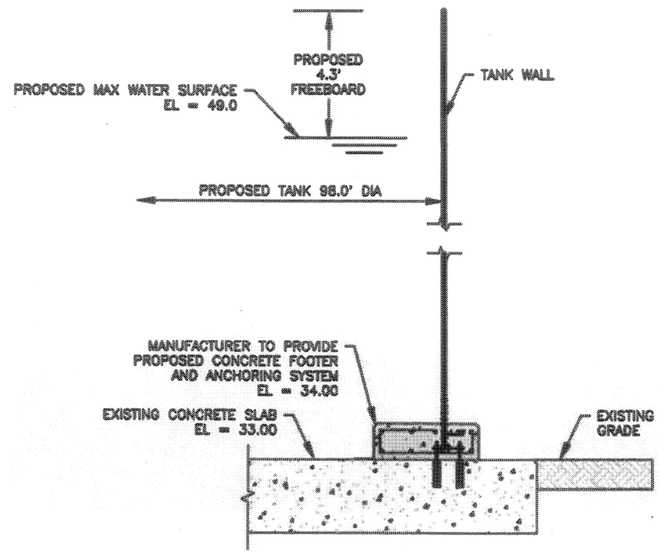

2 TYPICAL TANK WALL SECTION
N.T.S.

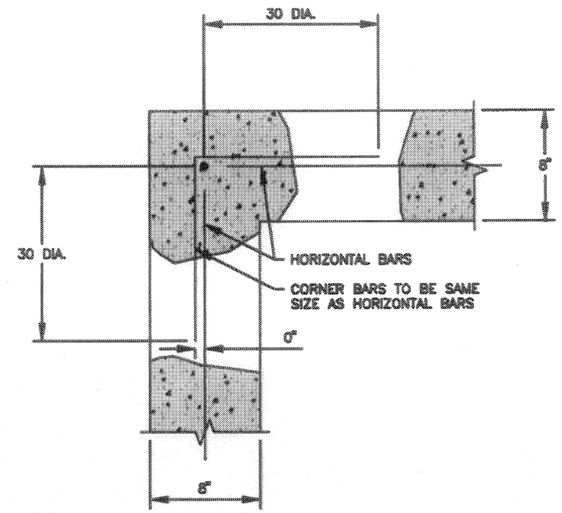

3 PLAN OF HORIZONTAL REINFORCEMENT AT WALL CORNER
N.T.S.

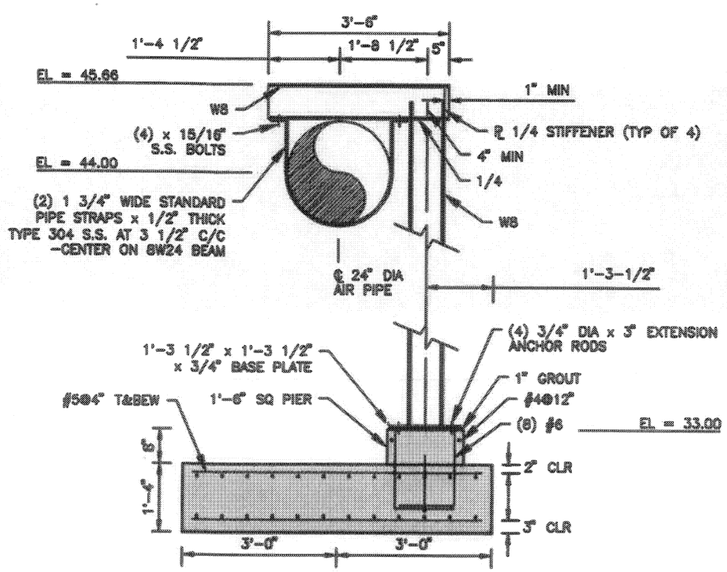

4 / S-2 5-FT x 6-FT FOUNDATION AND STEEL PIPE SUPPORT
N.T.S.

NOTES:
1. PIPE SUPPORT SHALL BE HOT DIP GALVANIZED.
2. PROVIDE FULL PENETRATION SHOP WELDED MOMENT CONNECTION AT BEAM TO COLUMN CONNECTION. CONTRACTOR TO PROVIDE SHOP DRAWING FOR COUNTY APPROVAL.

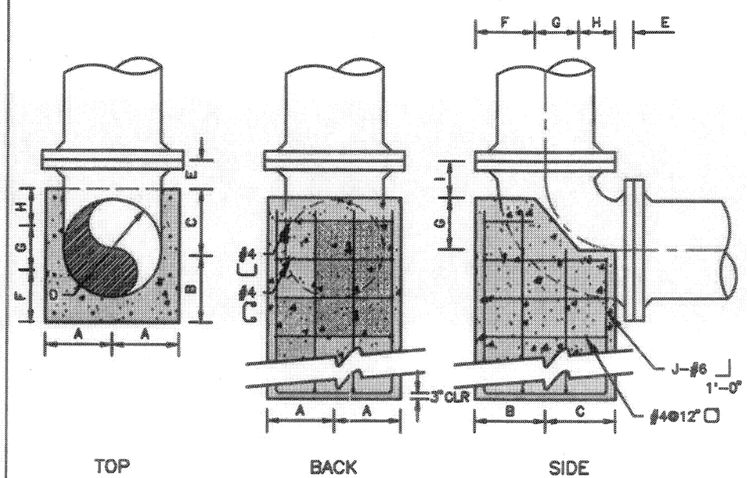

D	A	B	C	E	F	G	H	I	J
12"	9"	10"	8"	4"	7"	6"	5"	6"	8"
18"	12"	12"	12"	4½"	9"	9"	6"	7½"	12"

5 / C-10 90° BEND CONCRETE BASE SUPPORT
N.T.S.

100% SUBMITTAL

Stantec
STANTEC CONSULTING SERVICES INC.
5172 STATION WAY, SARASOTA, FLORIDA 34233
TEL. 941.366.0900 • FAX. 941.366.1022
FLORIDA CERTIFICATE NO. 27103 - WWW.STANTEC.COM

MANATEE COUNTY, FLORIDA
PUBLIC WORKS DEPARTMENT
ENGINEERING SERVICES
1022 26th Avenue East
Bradenton, FL 34208

NORTH WATER RECLAMATION FACILITY SLUDGE HOLDING IMPROVEMENTS

STRUCTURAL DETAILS

NO.	REVISION DESCRIPTION	BY	DATE

PROJECT #	177310546
SURVEY #	000
SEC./TWN./RGE	26/33S/18E
SCALE	

	BY	DATE
SURVEYED	GFY	05/10/13
DESIGNED	KKB	05/23/13
DRAWN	SRP	05/23/13
CHECKED	JRG	12/10/13

PAUL DUQUETTE
FLORIDA P.E. # 48457
Paul R. Duquette 13 DEC 13
Signature & Date

SHEET S-5

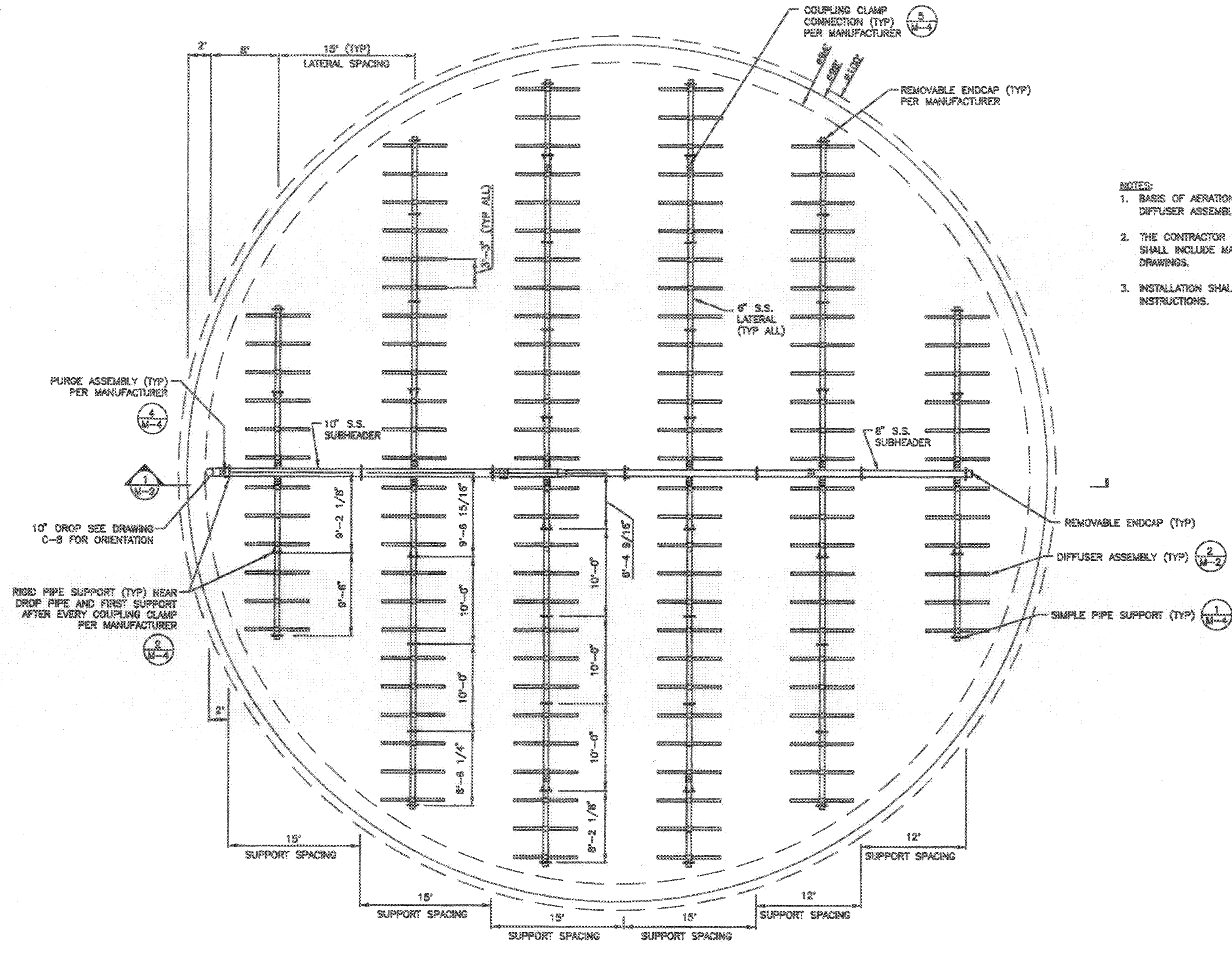

TYPICAL PROPOSED TANK DIFFUSER PLAN

NOTES:

1. BASIS OF AERATION DESIGN IS ENVIRONMENTAL DYNAMICS INC. FLEXAIR 84P MAGNUM DIFFUSER ASSEMBLIES. 128 DIFFUSER ASSEMBLIES PER TANK.
2. THE CONTRACTOR SHALL VERIFY DIMENSIONS, DETAILS AND QUANTITIES. SUBMITTALS SHALL INCLUDE MANUFACTURER'S AERATION DESIGN CALCULATIONS AND SHOP DRAWINGS.
3. INSTALLATION SHALL BE IN STRICT ACCORDANCE WITH THE MANUFACTURER'S WRITTEN INSTRUCTIONS.

MANATEE COUNTY, FLORIDA
PUBLIC WORKS DEPARTMENT
ENGINEERING SERVICES
1022 26th Avenue East
Bradenton, FL 34208

NORTH WATER RECLAMATION FACILITY SLUDGE HOLDING IMPROVEMENTS

SLUDGE HOLDING TANK PLAN

NO.	REVISION DESCRIPTION	BY	DATE

PROJECT #	177310545	
SURVEY #	000	
SEC./TWN./RGE	26/33S/18E	
	BY	DATE
SURVEYED		05/10/13
DESIGNED	KKB	05/23/13
DRAWN		05/23/13
CHECKED	JRG	12/10/13

KELLY BLAKE
FLORIDA P.E. # 69876

100% SUBMITTAL

Stantec
STANTEC CONSULTING SERVICES INC.
6172 STATION WAY, SARASOTA, FLORIDA 34233
TEL. 941.366.5800 - FAX. 941.366.1922
FLORIDA CERTIFICATE NO. 27103 - WWW.STANTEC.COM

SHEET M-1

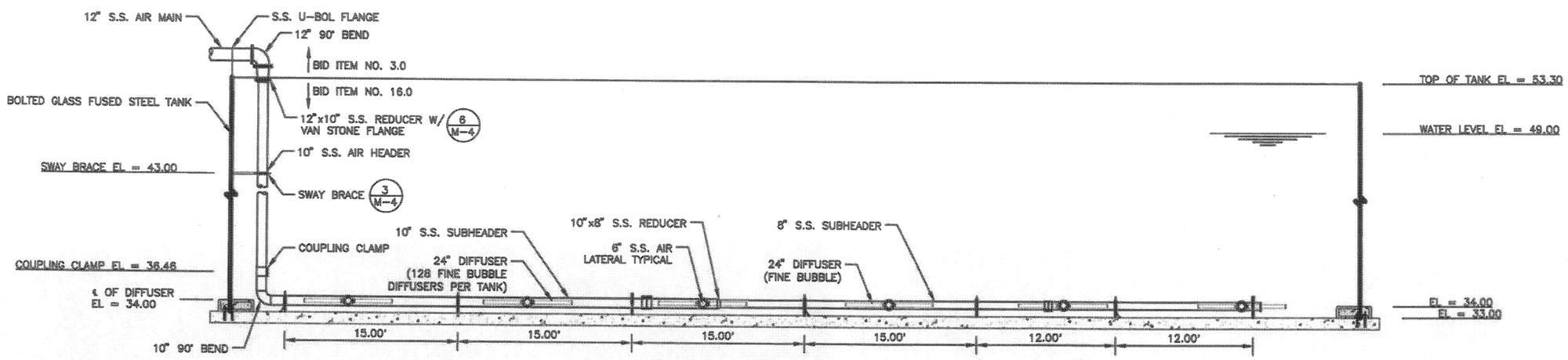

1 M-1 TANK CROSS SECTION

0 5 10
SCALE IN FEET

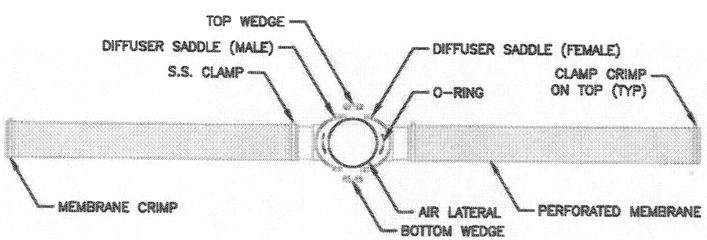

2 M-1 DIFFUSER ASSEMBLY
N.T.S.

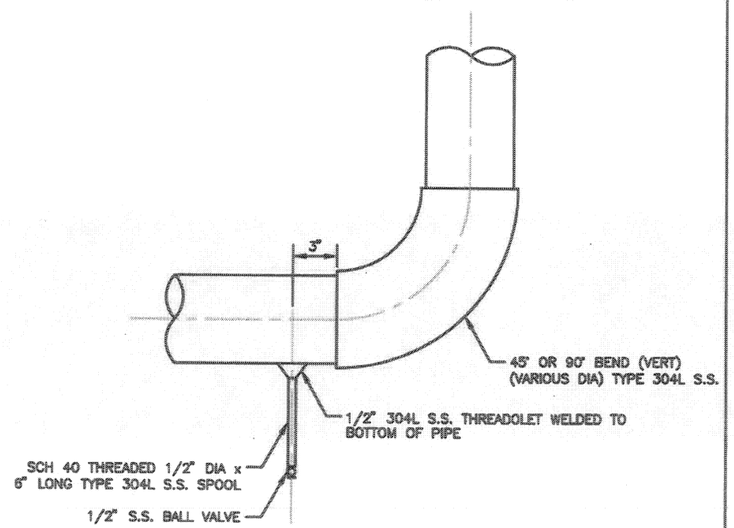

3 CONDENSATE BLOW OFF ASSEMBLY DETAIL
N.T.S.

NOTE:
CONTRACTOR SHALL PROVIDE CONDENSATE BLOW OFF ASSEMBLY AT ALL LOW POINTS IN AIR PIPING AS REQUIRED.

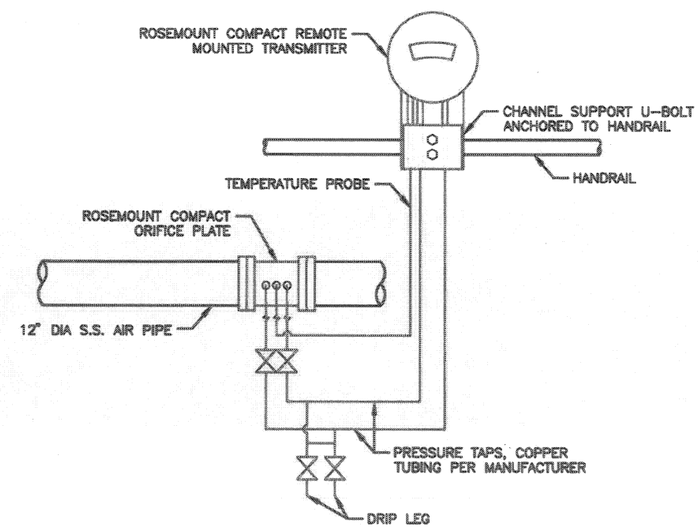

4 C-10 ORIFICE PLATE ASSEMBLY
N.T.S.

100% SUBMITTAL

Stantec
STANTEC CONSULTING SERVICES INC.
5172 STATION WAY, SARASOTA, FLORIDA 34233
TEL. 941.366.5600 - FAX. 941.366.1022
FLORIDA CERTIFICATE NO. 27103 - WWW.STANTEC.COM

MANATEE COUNTY, FLORIDA
PUBLIC WORKS DEPARTMENT
ENGINEERING SERVICES
1022 26th Avenue East
Bradenton, FL 34208

NORTH WATER RECLAMATION FACILITY
SLUDGE HOLDING IMPROVEMENTS
SLUDGE HOLDING TANK SECTION AND DETAILS

NO.	REVISION DESCRIPTION	BY	DATE

PROJECT #	177310545
SURVEY #	000
SEC./TWN./RGE	26/33S/18E
SCALE	SEE DETAILS

		DATE
SURVEYED		05/10/13
DESIGNED	KBB	05/23/13
DRAWN	SRD	05/23/13
CHECKED	JRG	12/20/13

KELLY BLAKE
FLORIDA P.E. # 69976

KELLY KRISTEN BLAKE
LICENSE
No. 69976
STATE OF FLORIDA
PROFESSIONAL ENGINEER

Signature & Date

SHEET M-2

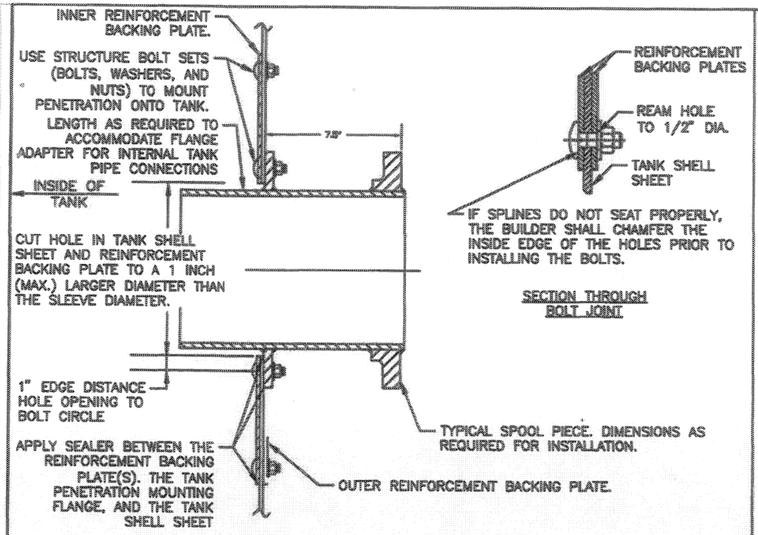

IF SPLINES DO NOT SEAT PROPERLY, THE BUILDER SHALL CHAMFER THE INSIDE EDGE OF THE HOLES PRIOR TO INSTALLING THE BOLTS.

SECTION THROUGH BOLT JOINT

1 TYPICAL TANK PENETRATION DETAIL
N.T.S.

NOTE:

1. ALL TANK PENETRATIONS SHALL FOLLOW THIS GENERAL DETAIL.
2. SEALER IS NOT SHOWN FOR DRAWING CLARITY.
3. DETAIL IS TYPICAL. SPECIFIC DETAIL AND REQUIREMENTS TO BE PROVIDED BY TANK MANUFACTURER, CONFIRMED BY CONTRACTOR AND SUPPLIED WITH SUBMITTAL FOR APPROVAL BY COUNTY.

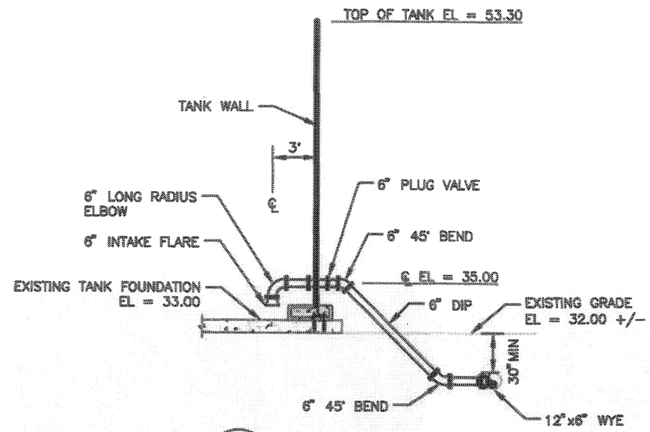

2 C-8 DRAIN SECTION
N.T.S.

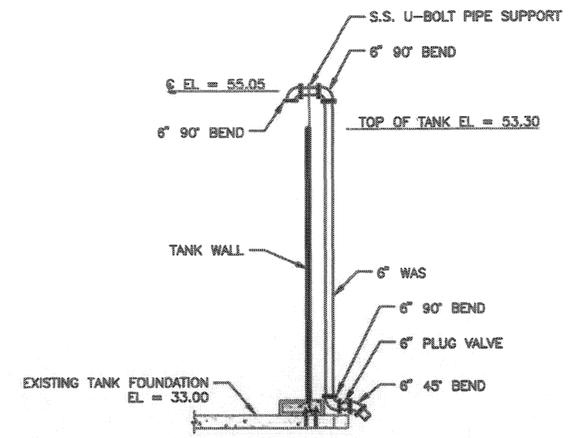

3 C-8 WAS FEED SECTION
N.T.S.

NOTES:

1. CONTRACTOR SHALL PROVIDE AN ADDITIONAL DRAIN ON EACH OF THE NEW TANKS.
2. CONTRACTOR SHALL COORDINATE THE LOCATION OF THE ADDITIONAL DRAIN AND THE BLIND FLANGE WITH THE COUNTY.

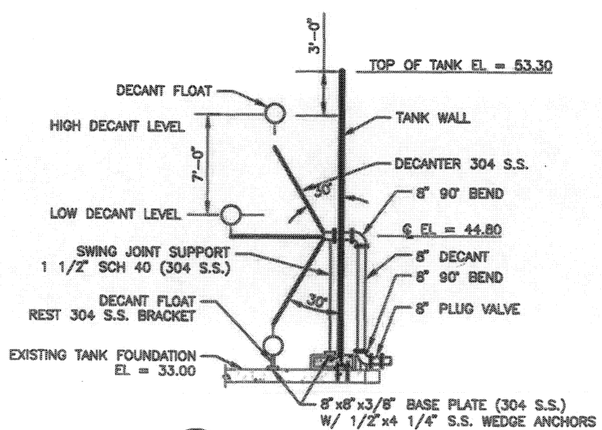

4 C-8 DECANTER SECTION
N.T.S.

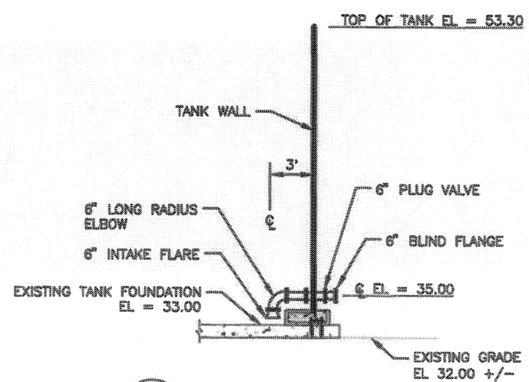

5 ADDITIONAL DRAIN SECTION
N.T.S.

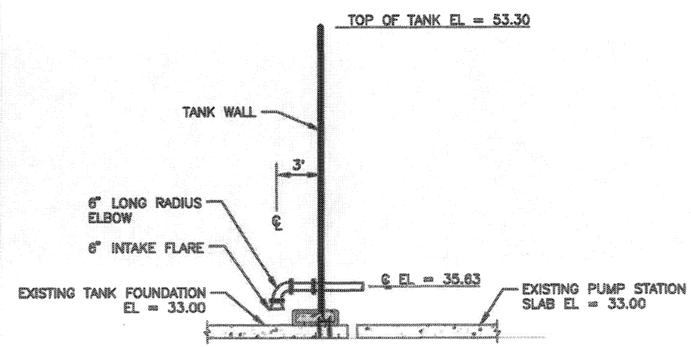

6 PUMP INTAKE
N.T.S.

MANATEE COUNTY, FLORIDA
PUBLIC WORKS DEPARTMENT
ENGINEERING SERVICES
1022 26th Avenue East
Bradenton, FL 34208

NORTH WATER RECLAMATION FACILITY SLUDGE HOLDING IMPROVEMENTS

SLUDGE HOLDING TANK DETAILS

NO.	REVISION DESCRIPTION	BY	DATE

PROJECT #	177310545	
SURVEY #	000	
SEC./TWN./RGE	26/33S/18E	
SCALE	SEE DETAILS	
	BY	DATE
SURVEYED	CEV	05/10/13
DRAWN	KRB	05/23/13
DESIGNED	KRB	05/23/13
CHECKED	JRG	12/20/13

KELLY BLAKE
FLORIDA P.E. No. 69876
Signature & Date

SHEET M-3

100% SUBMITTAL

Stantec
STANTEC CONSULTING SERVICES INC.
5172 STATION WAY, SARASOTA, FLORIDA 34233
TEL. 941.366.9600 - FAX. 941.366.1622
FLORIDA CERTIFICATE NO. 27103 - WWW.STANTEC.COM

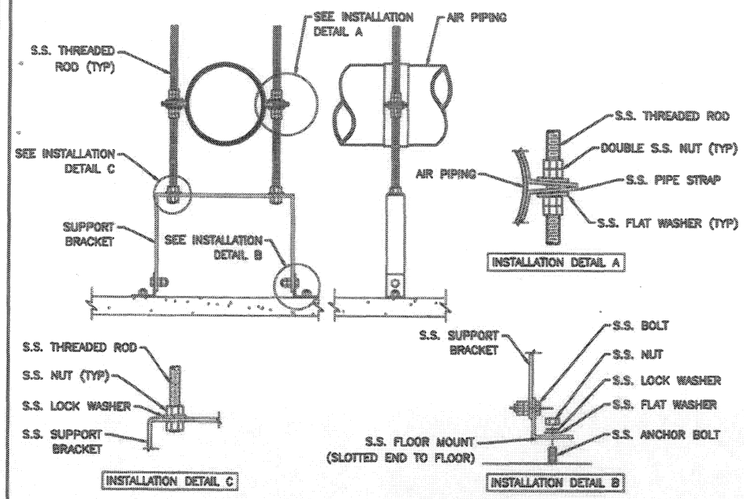

1 / M-1 S.S. SIMPLE PIPE SUPPORT DETAIL

N.T.S.

NOTES:
1. FLOOR MOUNTS SHALL BE SECURED TO BASIN FLOOR BY CONCRETE ANCHOR BOLTS.
2. A COMMERCIAL GRADE ANTI SEIZE LUBRICANT SHALL BE USED ON ALL STAINLESS STEEL THREADED CONNECTIONS.
3. ANCHOR HARDWARE SHALL BE PER MANUFACTURERS RECOMMENDATION.
4. INSTALLATION SHALL BE IN ACCORDANCE WITH MANUFACTURERS INSTALLATION INSTRUCTIONS.

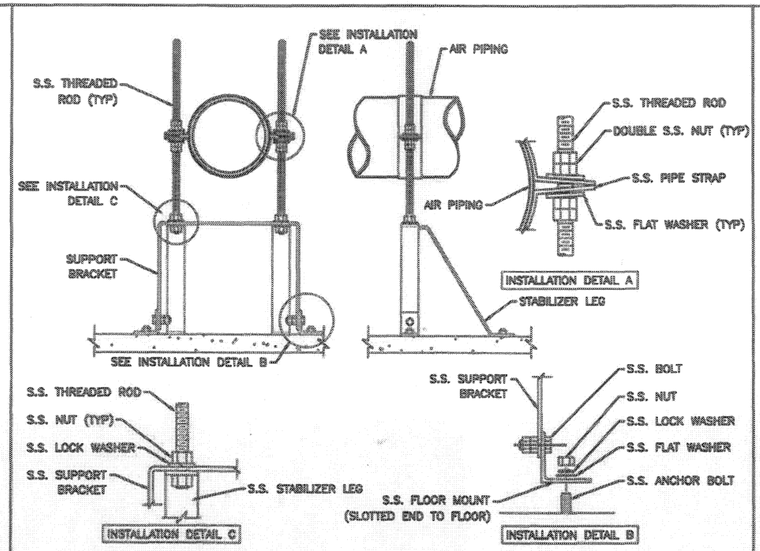

2 / M-1 S.S. RIGID PIPE SUPPORT DETAIL

N.T.S.

NOTES:
1. FLOOR MOUNTS SHALL BE SECURED TO BASIN FLOOR BY CONCRETE ANCHOR BOLTS.
2. A COMMERCIAL GRADE ANTI SEIZE LUBRICANT SHALL BE USED ON ALL STAINLESS STEEL THREADED CONNECTIONS.
3. ANCHOR HARDWARE SHALL BE PER MANUFACTURERS RECOMMENDATION.
4. INSTALLATION SHALL BE IN ACCORDANCE WITH MANUFACTURERS INSTALLATION INSTRUCTIONS.

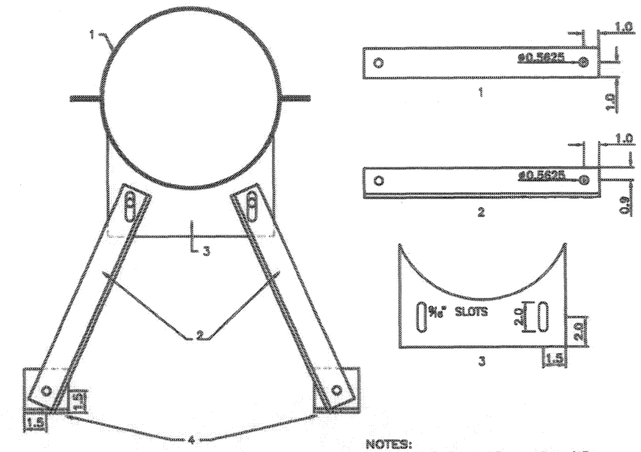

NOTES:
1. 2-1/8 X 2 FB X 17 1/2"
2. 2-1/4 X 2 X 2 ANGLE x 15 1/2"
3. 1-1/4 PLATE CUT D X F
4. 2-1/4 X 3 X 3 ANGLE X 3"
5. TWO SUPPLIED

3 / M-2 S.S. SWAY BRACE

N.T.S.

NOTES:
1. INSTALLATION SHALL BE IN ACCORDANCE WITH MANUFACTURERS INSTALLATION INSTRUCTIONS.

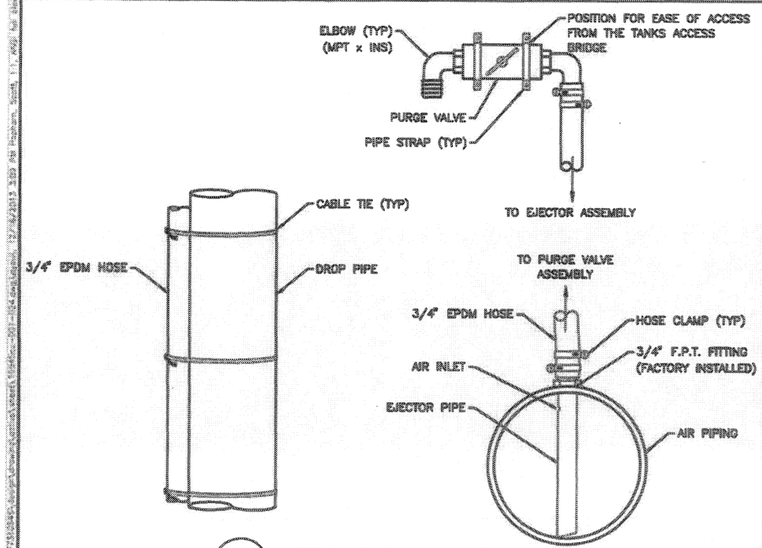

4 / M-1 PURGE ASSEMBLY DETAIL

N.T.S.

NOTES:
1. CONNECT EPDM HOSE AND SECURE TO EJECTOR WITH 2 HOSE CLAMPS OFFSET 180°.
2. ANCHOR VALVE WITH PE PIPE STRAPS.
3. CONNECT EPDM HOSE AND SECURE TO ELBOW WITH 2 HOSE CLAMPS OFFSET 180°.
4. SECURE HOSE TO DROP WITH CABLE TIES.
5. HOSE TO BE SECURED ON APPROXIMATELY 3FT CENTERS.

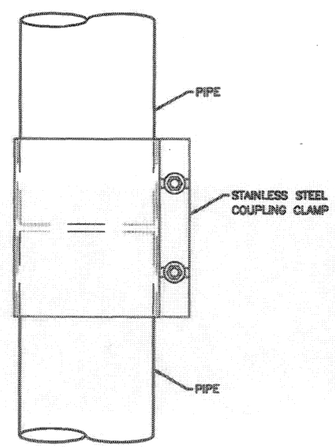

COUPLING CLAMPS

NOMINAL PIPE SIZE (INCHES)	CLAMP O.D. RANGE (INCHES)
2	2.32–2.63
3	3.40–3.70
4	4.45–4.75
6	6.55–6.95
8	8.59–8.99
10	10.65–11.05
12	12.65–13.05
14	14.00–14.40

5 / M-1 S.S. COUPLING CLAMP DETAIL

N.T.S.

NOTES:
1. COUPLING CLAMP SHALL BE INSTALLED A MINIMUM OF 2 FT. BELOW WATER LEVEL.
2. GAP BETWEEN PIPES SHALL BE LESS THEN 0.25 INCHES.
3. MATING PIPES SHALL HAVE THE SAME OUTSIDE DIAMETER.
4. BOLTS SHALL BE TORQUED IN ACCORDANCE WITH MANUFACTURERS RECOMMENDATIONS.

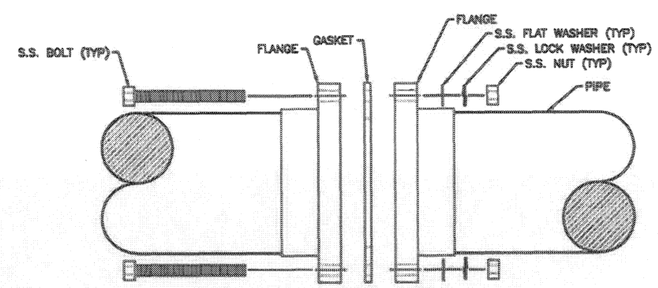

SIZE	BOLT CIRCLE	BOLTS REQ'D	BOLT SIZE (UNC x LENGTH)
2	4.75	4	5/8 – 11 x 3
3	6.00	4	5/8 – 11 x 4
4	7.50	8	5/8 – 11 x 4
6	9.50	8	3/4 – 10 x 4 1/2
8	11.75	8	3/4 – 10 x 4 1/2
10	14.25	12	7/8 – 9 x 4 1/2
12	17.00	12	7/8 – 9 x 5
14	18.75	12	7/8 – 9 x 5 1/2

6 / M-2 VAN STONE FLANGE DETAIL

N.T.S.

NOTES:
1. ANTI-SEIZE LUBRICANT SHALL BE USED ON ALL STAINLESS STEEL FASTENERS.
2. BOLT THREADS SHALL BE WELL LUBRICATED.
3. NUT AND BOLT THREADS SHALL BE FREE RUNNING DURING ASSEMBLY.
4. INSTALLATION SHALL BE IN ACCORDANCE WITH MANUFACTURERS INSTALLATION INSTRUCTIONS.

100% SUBMITTAL

Stantec
STANTEC CONSULTING SERVICES INC.
5172 STATION WAY, SARASOTA, FLORIDA 34233
TEL. 941.366.5600 - FAX. 941.366.1932
FLORIDA CERTIFICATE NO. 27105 - WWW.STANTEC.COM

MANATEE COUNTY, FLORIDA
PUBLIC WORKS DEPARTMENT
ENGINEERING SERVICES
1022 26th Avenue East
Bradenton, FL 34208

NORTH WATER RECLAMATION FACILITY
SLUDGE HOLDING IMPROVEMENTS
SLUDGE HOLDING TANK DETAILS

NO.	REVISION DESCRIPTION	BY	DATE

PROJECT #	177310545
SURVEY #	000
SEC./TWN./RGE	28/33S/18E
SCALE	N.T.S.

		DATE
DRAWN	[illegible]	05/10/13
DESIGNED	[illegible]	05/23/13
SRB	[illegible]	05/23/13
CHECKED	JRC	12/10/13

KELLY BLAKE
FLORIDA P.E. 60876

Signature & Date

SHEET M-4

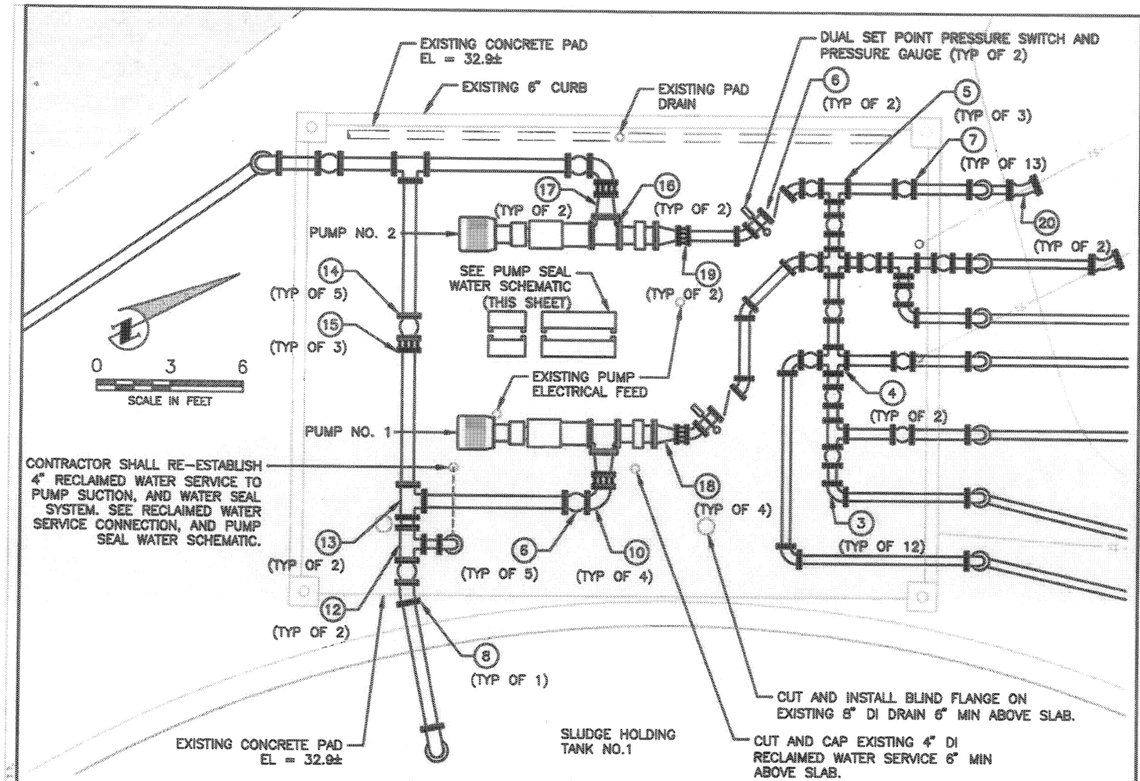

1 C-8 TANK NO.1 PUMP STATION

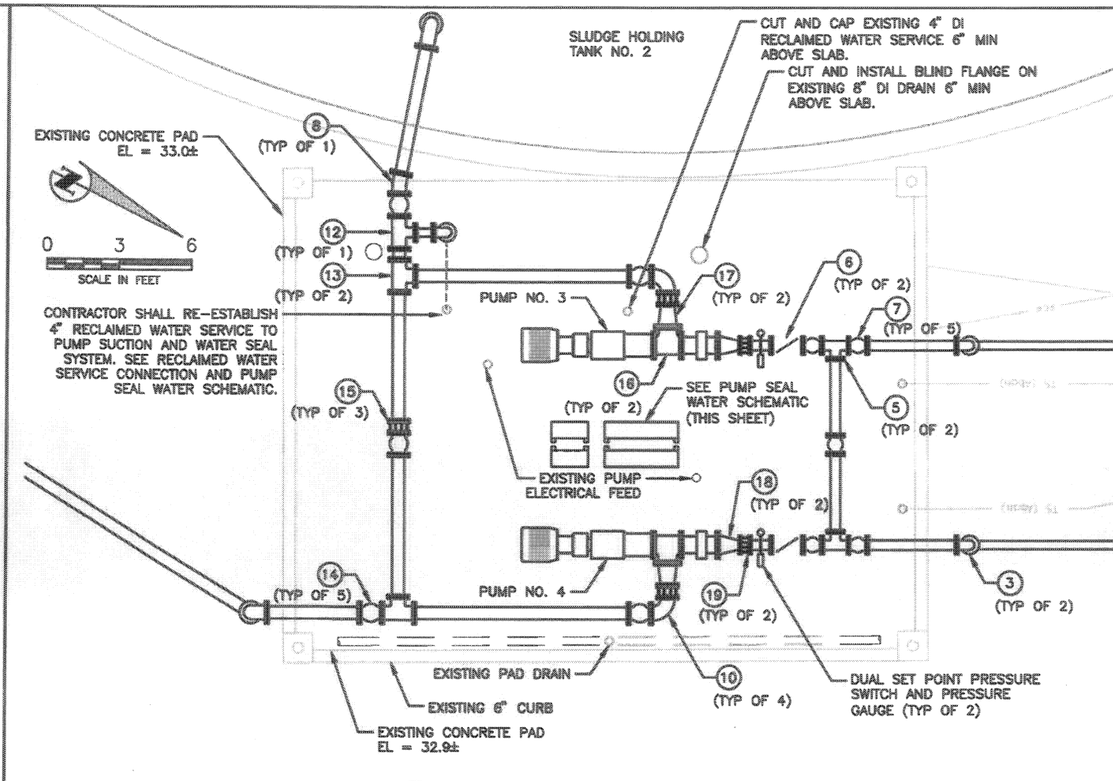

2 C-8 TANK NO. 2 PUMP STATION

NOTES:

1. ALL ABOVE GRADE PIPING SHALL BE FLANGED DUCTILE IRON CLASS 53, UNLESS OTHERWISE SPECIFIED. FLANGED COUPLING ADAPTORS SHALL BE MEGA LUGS BY EBAA.
2. ALL BURIED PIPE SHALL BE DUCTILE IRON WITH CLASS 53 WITH RESTRAINED MECHANICAL JOINTS, UNLESS OTHERWISE SPECIFIED.
3. ALL BURIED PIPES SHALL HAVE A MINIMUM OF 30 INCHES OF COVER UNLESS OTHERWISE SPECIFIED.
4. CONTRACTOR SHALL RELOCATE EXISTING POWER AND EXISTING CONTROL CONDUIT AND WIRE FOR EACH PUMP AS NECESSARY.
5. CONTRACTOR SHALL INSTALL AND ROUTE 1" PVC SCHEDULE 80 PUMP SEAL WATER DRAIN PIPE TO EXISTING PAD DRAIN. DRAIN PIPE SHALL BE SURFACE MOUNTED WITH STAINLESS STEEL STRAPS TO THE EXISTING SLAB AND/OR THE PROPOSED CONCRETE PUMP PADS, AS NECESSARY.
6. CONTRACTOR SHALL ROUTE 1" PVC SCHEDULE 80 WATER SEAL FEED LINE TO THE PROPOSED WATER SEAL STATION. WATER SEAL FEED LINE SHALL BE SURFACE MOUNTED WITH STAINLESS STEEL STRAPS TO THE EXISTING CONCRETE SLAB AND/OR THE PROPOSED CONCRETE PUMP PADS, AS NECESSARY.
7. WATER SEAL SYSTEM SHALL BE FIELD MOUNTED ON S.S. UNISTRUT SUPPORTS A MINIMUM OF 1' ABOVE EXISTING SLAB. CONTRACTOR SHALL SUBMIT SHOP DRAWINGS OF SEAL WATER ASSEMBLY FOR APPROVAL.
8. CONTRACTOR SHALL CAP ANY EXISTING PIPE PENETRATIONS THAT ARE NOT IN SERVICE UNLESS OTHERWISE SPECIFIED.
9. CUT AND INSTALL 4" DI BLIND FLANGE ON EXISTING 4" THICKENED SLUDGE DISCHARGE LINES.
10. CONTRACTOR SHALL PROVIDE STAINLESS STEEL PIPE SUPPORTS IN ACCORDANCE WITH MANUFACTURER'S RECOMMENDATIONS FOR DUCTILE IRON PIPE, VALVES, AND APPURTENANCES. PIPE SUPPORTS SHALL BE PROVIDED AT EACH VALVE AS WELL AS INTERMEDIATE LOCATIONS ALONG ABOVE GRADE PIPING. CONTRACTOR SHALL SUBMIT PIPE SUPPORT LOCATIONS TO COUNTY FOR APPROVAL.

LEGEND

1. MOYNO PUMP
2. 4" 45° BEND
3. 4" 90° BEND
4. 4"x4" CROSS
5. 4"x4" TEE
6. 4" CHECK VALVE
7. 4" PLUG VALVE
8. 6" 11.25° BEND
9. NOT USED
10. 6" 90° BEND
11. NOT USED
12. 6"x4" TEE
13. 6"x6" TEE
14. 6" PLUG VALVE
15. 6" COUPLING ADAPTER
16. 8"x8" TEE
17. 8"x6" REDUCER
18. 8"x4" REDUCER
19. 4" COUPLING ADAPTER
20. 4" 22.5° BEND

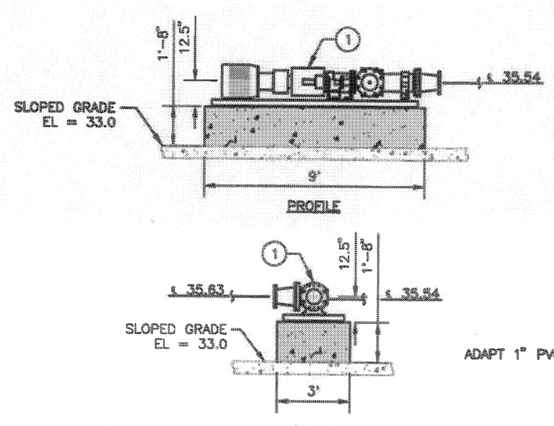

3 PUMP SECTION (TYP)
N.T.S.

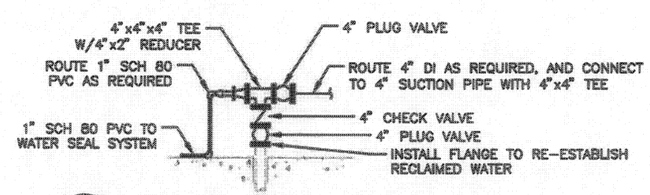

4 RECLAIMED WATER SERVICE SCHEMATIC
N.T.S.

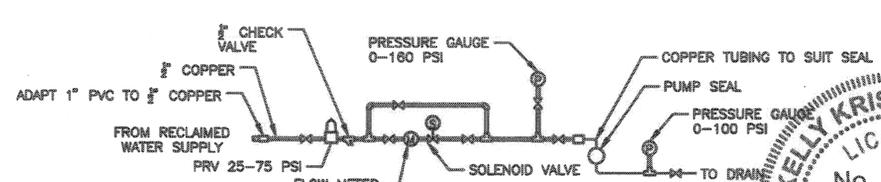

5 PUMP SEAL WATER SCHEMATIC
N.T.S.

100% SUBMITTAL

Stantec
STANTEC CONSULTING SERVICES INC.
5172 STATION WAY, SARASOTA, FLORIDA 34233
TEL. 941.366.5600 - FAX. 941.366.1922
FLORIDA CERTIFICATE NO. 27153 - WWW.STANTEC.COM

MANATEE COUNTY, FLORIDA
PUBLIC WORKS DEPARTMENT
ENGINEERING SERVICES
1022 26th Avenue East
Bradenton, FL 34208

NORTH WATER RECLAMATION FACILITY
SLUDGE HOLDING IMPROVEMENTS
SLUDGE PUMP STATIONS PLAN AND DETAILS

NO.	REVISION DESCRIPTION	BY	DATE

PROJECT #	177310545
SURVEY #	000
SEC./TWN./RGE	26/33S/18E
SCALE	1"=5'

	BY	DATE
SURVEYED		05/10/13
DESIGNED	KKB	05/23/13
DRAWN	TSB	05/23/13
CHECKED	JRG	12/10/13

KELLY BLAKE
FLORIDA REG. 69876
Signature & Date

KELLY KRISTEN BLAKE
LICENSED
No. 69876
STATE OF FLORIDA
PROFESSIONAL ENGINEER
DEC 13

SHEET M-5

NOTES:

1. CONTRACTOR SHALL DESIGN, FURNISH, AND INSTALL STAINLESS STEEL PIPE SUPPORTS AS SPECIFIED IN DIVISION 15 OF CONTRACT DOCUMENTS.
2. CONTRACTOR SHALL SUBMIT PIPE SUPPORT SYSTEM TO COUNTY FOR APPROVAL PRIOR TO FABRICATION AND INSTALLATION.

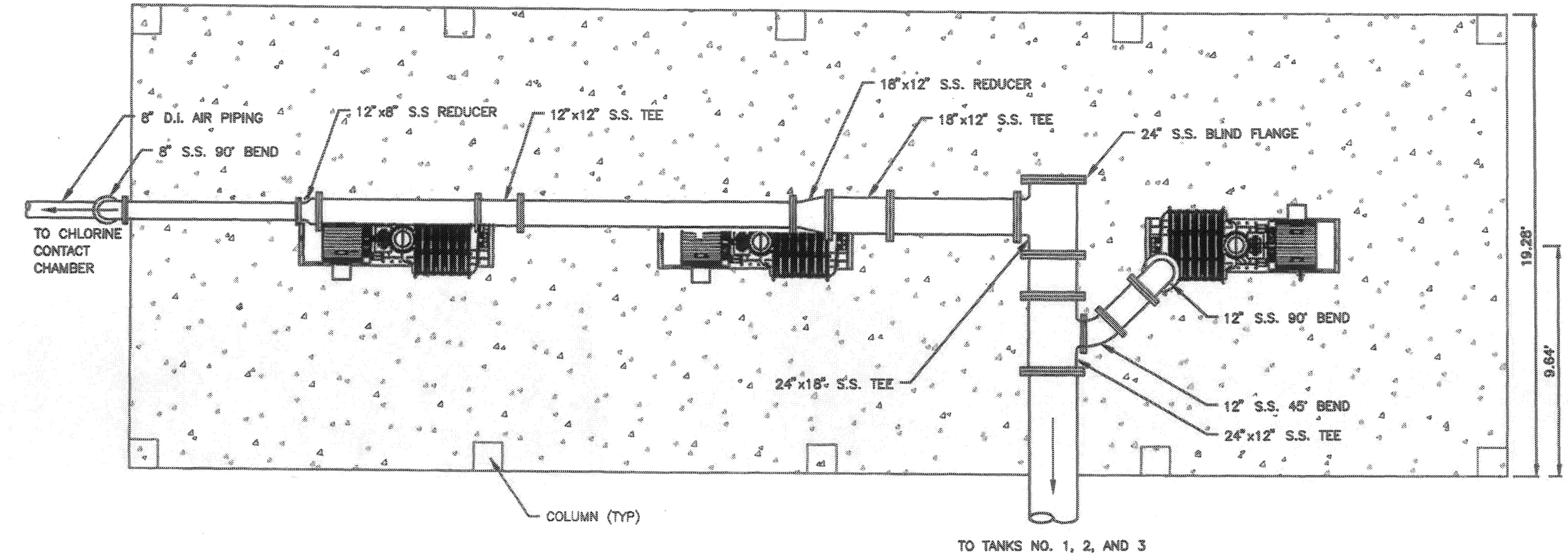

BLOWER PLAN

0 3 6

SCALE IN FEET

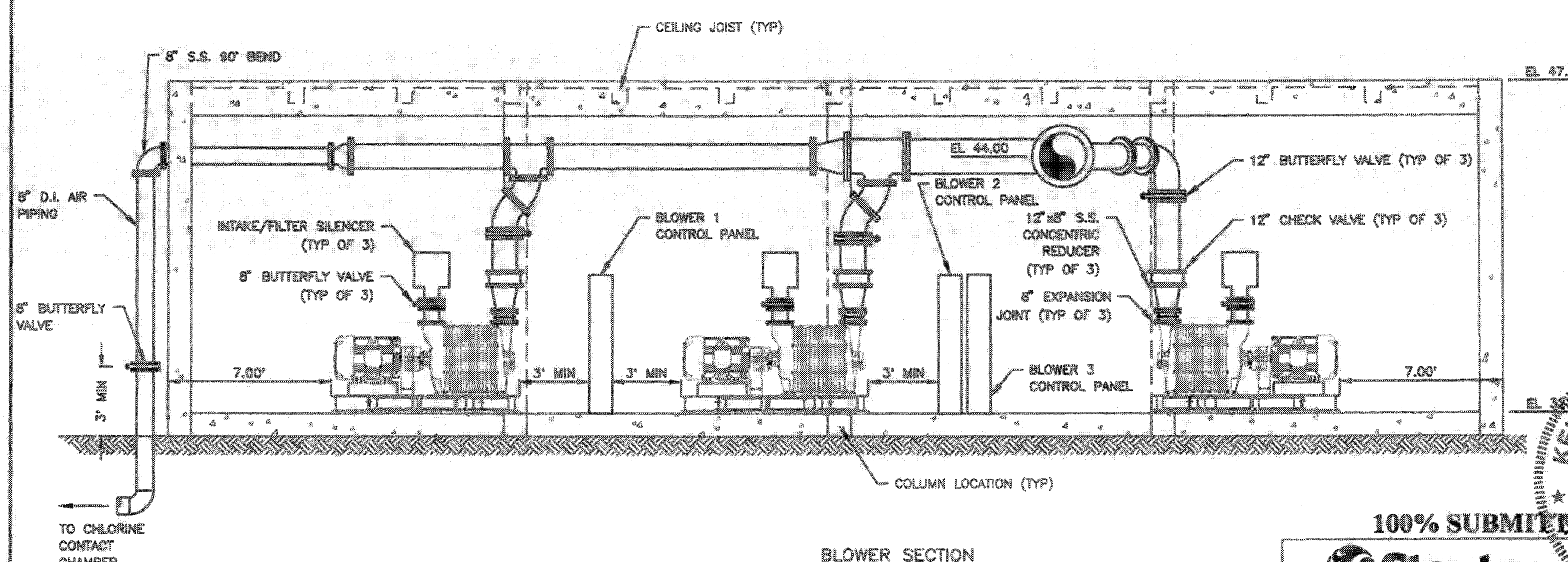

BLOWER SECTION

0 3 6

SCALE IN FEET

*NOTE: ORIENT BUTTERFLY VALVES FOR CONVENIENT OPERATION BY STAFF

MANATEE COUNTY, FLORIDA
PUBLIC WORKS DEPARTMENT
ENGINEERING SERVICES
1022 26th Avenue East
Bradenton, FL 34208

NORTH WATER RECLAMATION FACILITY SLUDGE HOLDING IMPROVEMENTS

BLOWER IMPROVEMENT PLAN AND SECTION

NO.	REVISION DESCRIPTION	BY	DATE

PROJECT #	177310545	
SURVEY #	000	
SEC./TWN./RGE	26/33S/18E	
SCALE	AS SHOWN	
BY		DATE
SURVEYED		
DESIGNED	KKB	05/24/13
DRAWN	CRP	05/13/13
CHECKED	JRG	12/19/13

KELLY BLAKE

STANTEC P.E. 69876

Signature & Date

100% SUBMITTAL

Stantec

STANTEC CONSULTING SERVICES INC.
6172 STATION WAY, SARASOTA, FLORIDA 34233
TEL. 941.388.5500 - FAX 941.388.1922
FLORIDA CERTIFICATE NO. 27103 - WWW.STANTEC.COM

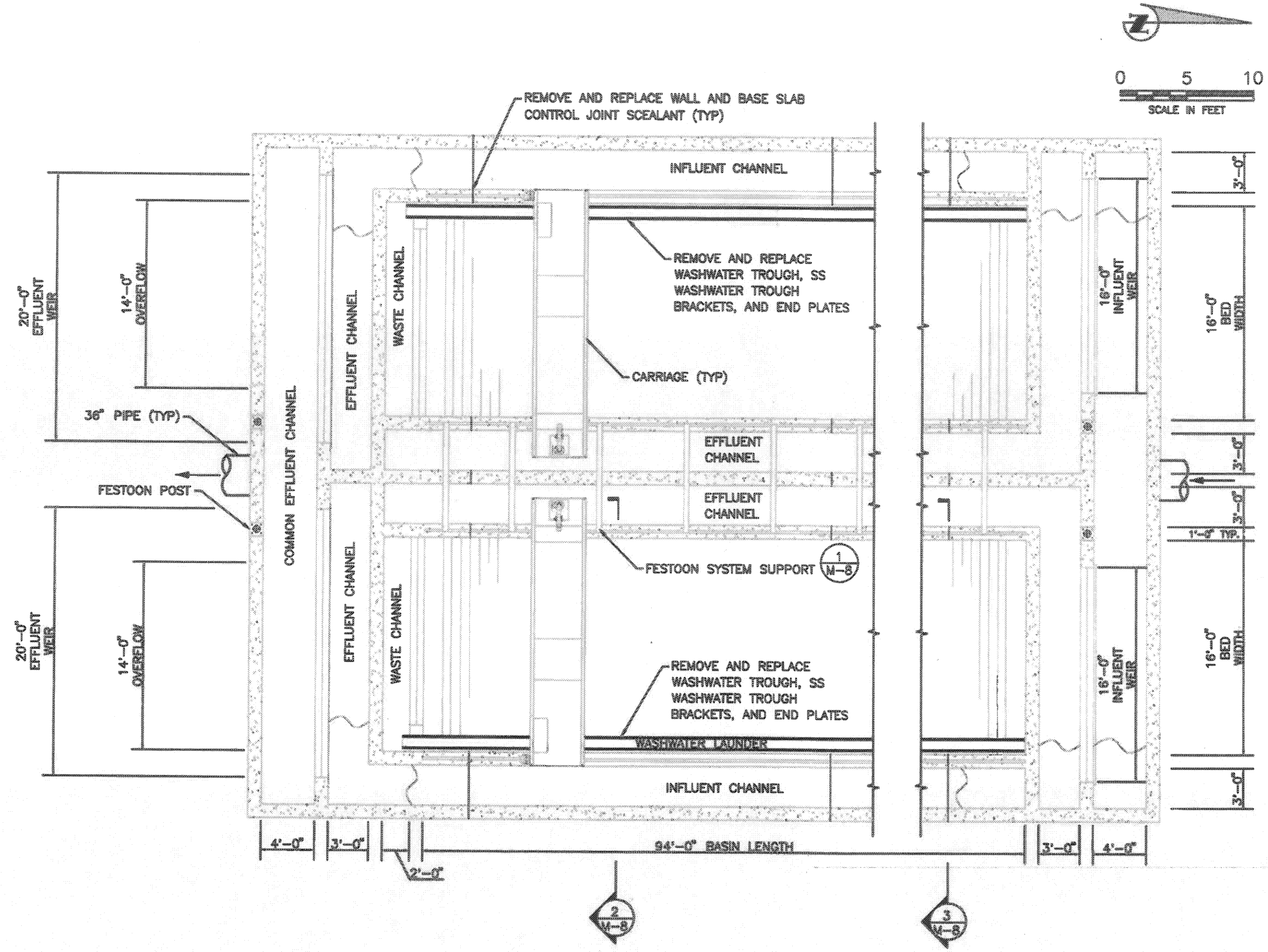

NOTES:

1. RECOAT FILTER INTERIOR CONCRETE SURFACES. COATING SHALL BE AS SPECIFIED IN SECTION 09900. SURFACE PREPARATION AND APPLICATION SHALL BE IN STRICT ACCORDANCE WITH THE COATING MANUFACTURER'S WRITTEN INSTRUCTIONS.
2. REMOVE AND REPLACE SEALANT IN CONTROL AND EXPANSION JOINTS.
3. ALL REPLACEMENT PARTS SHALL BE FROM THE ORIGINAL EQUIPMENT MANUFACTURER.
4. REHABILITATION SHALL INCLUDE ALL INCIDENTALS RECOMMENDED BY THE EQUIPMENT MANUFACTURER WHETHER SHOWN OR NOT.
5. BOTH FILTERS ARE TO BE REHABILITATED. ONE FILTER MUST REMAIN IN SERVICE AT ALL TIMES.

MANATEE COUNTY, FLORIDA
PUBLIC WORKS DEPARTMENT
ENGINEERING SERVICES
1022 26th Avenue East
Bradenton, FL 34208

NORTH WATER RECLAMATION FACILITY
SLUDGE HOLDING IMPROVEMENTS
AUTOMATIC BACKWASH FILTER PLAN

NO.	REVISION DESCRIPTION	BY	DATE

PROJECT #	177310545	
SURVEY #	000	
SEC./TWN./RGE	28/33S/18E	
SCALE	1"=5'	
	BY	DATE
SURVEYED		09/10/13
DESIGNED	KKB	09/23/13
DRAWN	SRP	09/23/13
CHECKED	JRG	12/10/13

KELLY BLAKE
FLORIDA P.E. # 69876
Signature & Date

100% SUBMITTAL

Stantec
STANTEC CONSULTING SERVICES INC.
6172 STATION WAY, SARASOTA, FLORIDA 34232
TEL. 941.366.5500 - FAX. 941.366.1922
FLORIDA CERTIFICATE NO. 27103 - WWW.STANTEC.COM

SHEET M-7

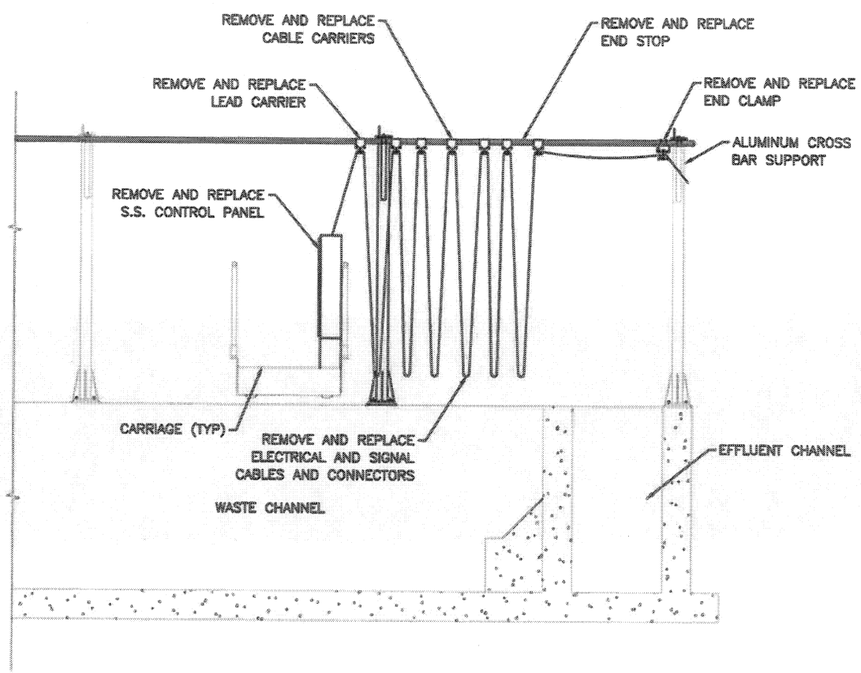

1 / M-7 FESTOON SYSTEM

0 2.5 5
SCALE IN FEET

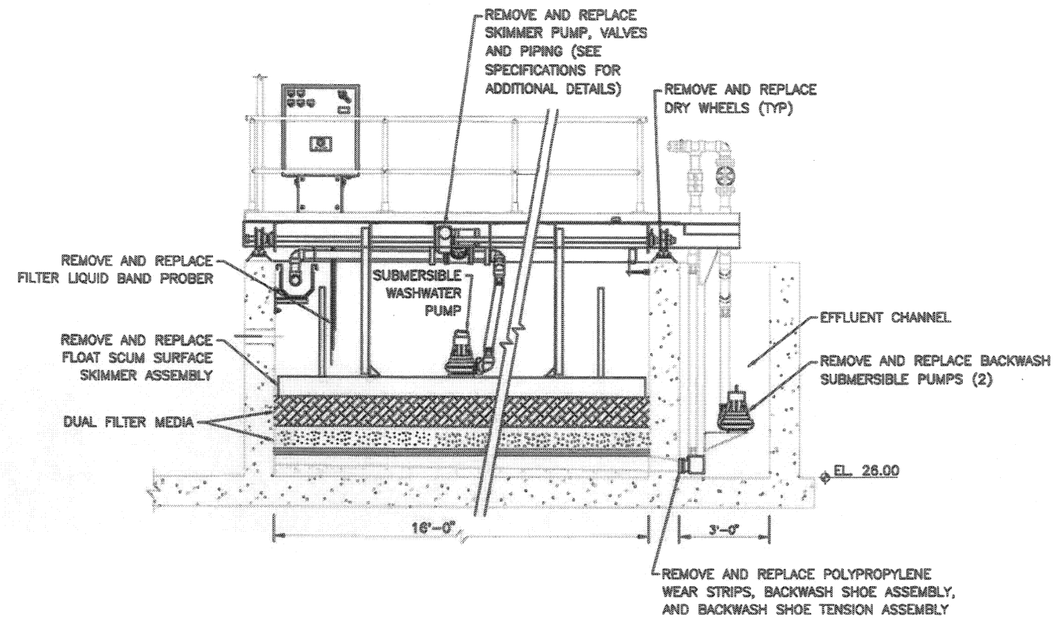

2 / M-7 SECTION

0 2.5 5
SCALE IN FEET

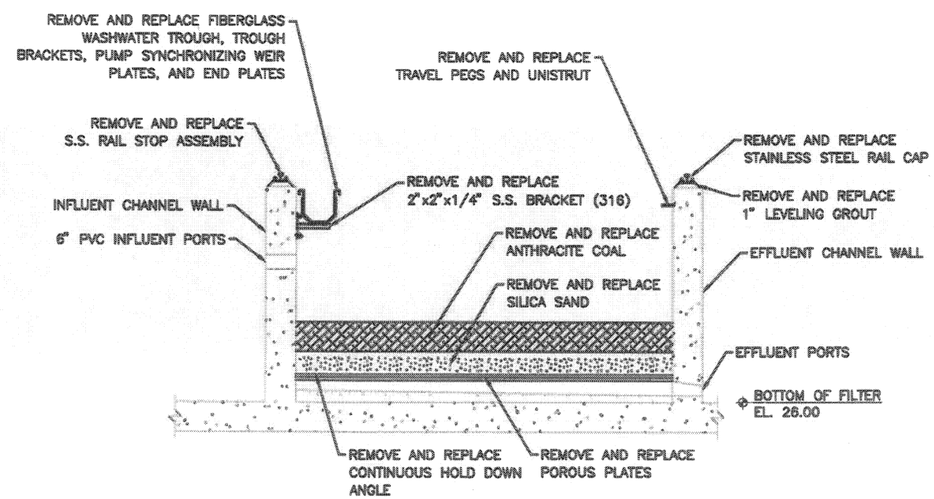

3 / M-7 TYPICAL SECTION–FILTER BED

0 2.5 5
SCALE IN FEET

MANATEE COUNTY, FLORIDA
PUBLIC WORKS DEPARTMENT
ENGINEERING SERVICES

1022 26th Avenue East
Bradenton, FL 34208

NORTH WATER RECLAMATION FACILITY
SLUDGE HOLDING IMPROVEMENTS
AUTOMATIC BACKWASH
SECTION AND DETAILS

NO.	REVISION DESCRIPTION	BY	DATE

PROJECT #	177310545	
SURVEY #	000	
SEC./TWN./RGE	26/33S/18E	
SCALE	1"=5'	
		DATE
SURVEYED	CRY	05/10/13
DESIGNED	HRG	05/31/13
DRAWN	SRP	06/22/13
CHECKED	JRG	12/10/13

KELLY BLAKE
FLORIDA P.E. # 59876

STATE OF FLORIDA PROFESSIONAL ENGINEER

Signature & Date

100% SUBMITTAL

Stantec
STANTEC CONSULTING SERVICES INC.
5172 STATION WAY, SARASOTA, FLORIDA 34233
TEL. 941.366.5500 • FAX. 941.366.1922
FLORIDA CERTIFICATE NO. 27105 - WWW.STANTEC.COM

SHEET M-8

SCADA DISPLAY OR CONTROL

PANEL MOUNTED (MAIN OR REMOTE)

PANEL BEHIND (MAIN OR REMOTE)

PANEL MOUNTED (LOCAL)

LOCALLY MOUNTED

SINGLE LINE TAG

MOUNTED BEHIND PANEL (LOCAL)

PILOT LIGHT

PANEL PILOT LIGHT

COMPUTER FUNCTION

CONTROL TYPE (DI, DO, AI, AO)

(I) DATA LINK

INTERLOCKING FUNCTION

PANEL

DIAPHRAGM CONTROL

GROUND

POLYMER FEED SYSTEM (DRY)

PROGRESSIVE CAVITY PUMP

ELECTRICAL SIGNAL

3 PHASE AC POWER

DATALINK

24VDC SIGNAL

DC POWER

GLOBE VALVE

BALL VALVE

HALF SIZE BALL VALVE

GATE VALVE

PLUG VALVE

CHECK VALVE

NEEDLE VALVE

PINCH VALVE

FOOT VALVE

DIAPHRAGM

BUTTERFLY VALVE

FILL VALVE

REDUCER

FLEXIBLE CONNECTOR

INLINE STATIC MIXER

CENTRIFUGAL PUMP

BLOWER PUMP

SUBMERSIBLE PUMP

METERING PUMP

ROTAMETER

MOTOR

MIXER

FLANGE

VACUUM BREAKER

RELIEF AND/OR SAFETY

SOLENOID VALVE

3-WAY SOLENOID

4-WAY SOLENOID

DRAIN

DOUBLE LEAF CHECK VALVE

WYE STRAINER

VIC COUPLING

3-WAY VALVE

4-WAY VALVE

HOSE CONNECTION

VENT WITH SCREEN

LEVEL GAUGE

GAS CYLINDERS

EDUCTOR

AIR RELEASE VALVE

BACK PRESSURE VALVE

HOSE PUMP

SIMPLEX RECEPTACLE

DUPLEX RECEPTACLE

TIE POINT

SELF ACTUATED REGULATOR

PILOT OPERATED PRESSURE REGULATOR

PILOT OPERATED BACKPRESSURE REGULATOR

MOTOR OPERATED

CYLINDER OR PISTON OPERATED

DIAPHRAGM ACTUATOR W/DOUBLE ACTING OPERATOR W/O ACCESSORIES

DIAPHRAGM ACTUATOR W/DOUBLE ACTING OPERATOR WITH HANDWHEEL

DIAPHRAGM ACTUATOR W/DOUBLE ACTING OPERATOR WITH ADJUSTABLE OPENING LIMIT STOP

VANE TYPE ACTUATOR

AIR OPERATOR W/POSITIONER

FAIL OPEN

FAIL CLOSED

FAIL LAST POSITION

STEAM TRAP

RESIN OR MEDIA TRAP

DESICCANT BREATHER

VENT PIPE

RUPTURE DISC

DIAPHRAGM SEAL

SPECTACLE BLIND

PULSATION DAMPENER

TURBINE DRIVE

PNEUMATIC PISTON

PADDLE WHEEL FLOW SENSOR

END CLOSURE (CLEANING CONNECTION)

EJECTOR

VACUUM PUMP

POSITIVE DISPLACEMENT PUMP W/MANUAL STROKE ADJUSTMENT

POSITIVE DISPLACEMENT PUMP W/PNEUMATIC STROKE ADJUSTMENT

POSITIVE DISPLACEMENT PUMP W/ELECTRIC STROKE ADJUSTMENT

HEAT EXCHANGER

VENT TO ATMOSPHERE

ROTARY COMPRESSER OR BLOWER

VENTURI

VORTEX SENSOR

FLOW NOZZLE

SONIC FLOW SENSOR

INJECTION SPARGER

RO BLOCK OR TUBE

DOUBLE SKIN UF CARTRIDGE

FLOW SIGHT GLASS

SIGHTGLASS (ON VESSEL)

LEVEL GAUGE

AIR SUPPLY

NITROGEN SUPPLY

FLOW ELEMENT (ORIFICE PLATE)

INLINE FLOW INDICATOR (ROTAMETER)

FLOW ELEMENT (ANNUBAR)

FLOW TOTALIZING INDICATOR (TURBINE METER)

FLOW ELEMENT (MAGNETIC)

FLOW ELEMENT (VENTURI)

LEVEL ELEMENT (ULTRASONIC OR RADAR)

INSTRUMENT SOCIETY OF AUTOMATION

LETTER	FIRST LETTER (S)		SUCCEEDING LETTERS		
	PROCESS OF INITIATING VARIABLE	MODIFIER	READOUT OR PASSIVE FUNCTION	OUTPUT FUNCTION	MODIFIER
A	ANALYSIS (+)		ALARM		
B	BURNER FLAME		USERS CHOICE (+)	USERS CHOICE (+)	USERS CHOICE (+)
C	USERS CHOICE (+)			CONTROL	
D	USERS CHOICE	DIFFERENTIAL			
E	VOLTAGE		PRIMARY ELEMENT/SENSOR		
F	FLOW RATE	RATIO/FRACTION			
G	USERS CHOICE		GLASS/VIEWING DEVICE		
H	HAND (MANUAL)				HIGH
I	CURRENT (ELECTRIC)		INDICATE		
J	POWER/TORQUE	SCAN			
K	TIME OR SCHEDULE	TIME RATE OF CHANGE		CONTROL STATION	
L	LEVEL		LIGHT (PILOT)		LOW
M	MOTOR	MOMENTARY			MIDDLE/INTERMEDIATE
N	DATA		USERS CHOICE (+)	USERS CHOICE (+)	USERS CHOICE (+)
O	USERS CHOICE (+)		ORIFICE		
P	PRESSURE (OR VACUUM)		POINT (TEST CONNECTION)		
Q	QUANTITY	INTEGRATE			INTEGRATE/TOTALIZE
R	RADIATION		RECORD OR PRINT		
S	SPEED OR FREQUENCY	SAFETY		SWITCH	STARTER
T	TEMPERATURE			TRANSMIT	
U	MULTIVARIABLE (+)		MULTIFUNCTION (+)	MULTIFUNCTION (+)	MULTIFUNCTION (+)
V	VIBRATION MECHANICAL ANALYSIS			VALVE, DAMPER, LOUVER	
W	WEIGHT OR FORCE		WELL		
X	MALFUNCTION/FAULT	X AXIS	UNCLASSIFIED (+)	UNCLASSIFIED (+)	UNCLASSIFIED (+)
Y	EVENT STATE OR PRESENCE	Y AXIS		RELAY OR COMPUTE (+)	
Z	POSITION	Z AXIS		DRIVE, ACTUATE OR UNCLASSIFIED FINAL CONTROL ELEMENT	

(+) WHEN USED, EXPLANATION IS SHOWN ADJACENT TO INSTRUMENT SYMBOL. SEE ABBREVIATIONS AND LETTERS SYMBOLS.

TRANSDUCER SUBSCRIPTS

A	ANALOG	I	CURRENT
D	DIGITAL	P	PNEUMATIC
E	VOLTAGE	PF	PULSE FREQUENCY
F	FREQUENCY	PD	PULSE DURATION
H	HYDRAULIC	R	RESISTANCE
		POT	POTENTIOMETER

EXAMPLE:

FY I/P — CURRENT TO PNEUMATIC TRANSDUCER (BACK OF PANEL, IN A FLOW LOOP)

AIT pH — ANALYSIS INDICATING TRANSMITTER WITH THE SUBSCRIPT SHOWING THE TYPE, SUCH AS pH, TURBIDITY, Cl RESIDUAL, ETC.

DEVICES FURNISHED BY OTHER THAN SYSTEM SUPPLIER OR EXISTING

WILLARD C. HOANSHELT LICENSE No 42593 STATE OF FLORIDA PROFESSIONAL ENGINEER

100% SUBMITTAL DEC 16 2013

EMI

WILLARD C. HOANSHELT, P.E.
FLORIDA P.E. NO. 42593
EB 6160

MANATEE COUNTY, FLORIDA
PUBLIC WORKS DEPARTMENT
ENGINEERING SERVICES
1022 26th Avenue East
Bradenton, Fl. 34208

NORTH WATER RECLAMATION FACILITY
SLUDGE HOLDING IMPROVEMENTS
INSTRUMENTATION SYMBOLS AND ABBREVIATIONS

NO.	REVISION DESCRIPTION	BY	DATE

PROJECT #	177310545
SURVEY #	000
SEC./TWN./ROE	26/33S/18E
SCALE	N.T.S.

	BY	DATE
SURVEYED	GFY	05/10/13
DESIGNED	KKB	05/23/13
DRAWN	SRP	05/23/13
CHECKED	JRG	12/10/13

WILLARD C. HOANSHELT, P.E.
FLORIDA P.E. # 42593

Signature & Date

SHEET I-1

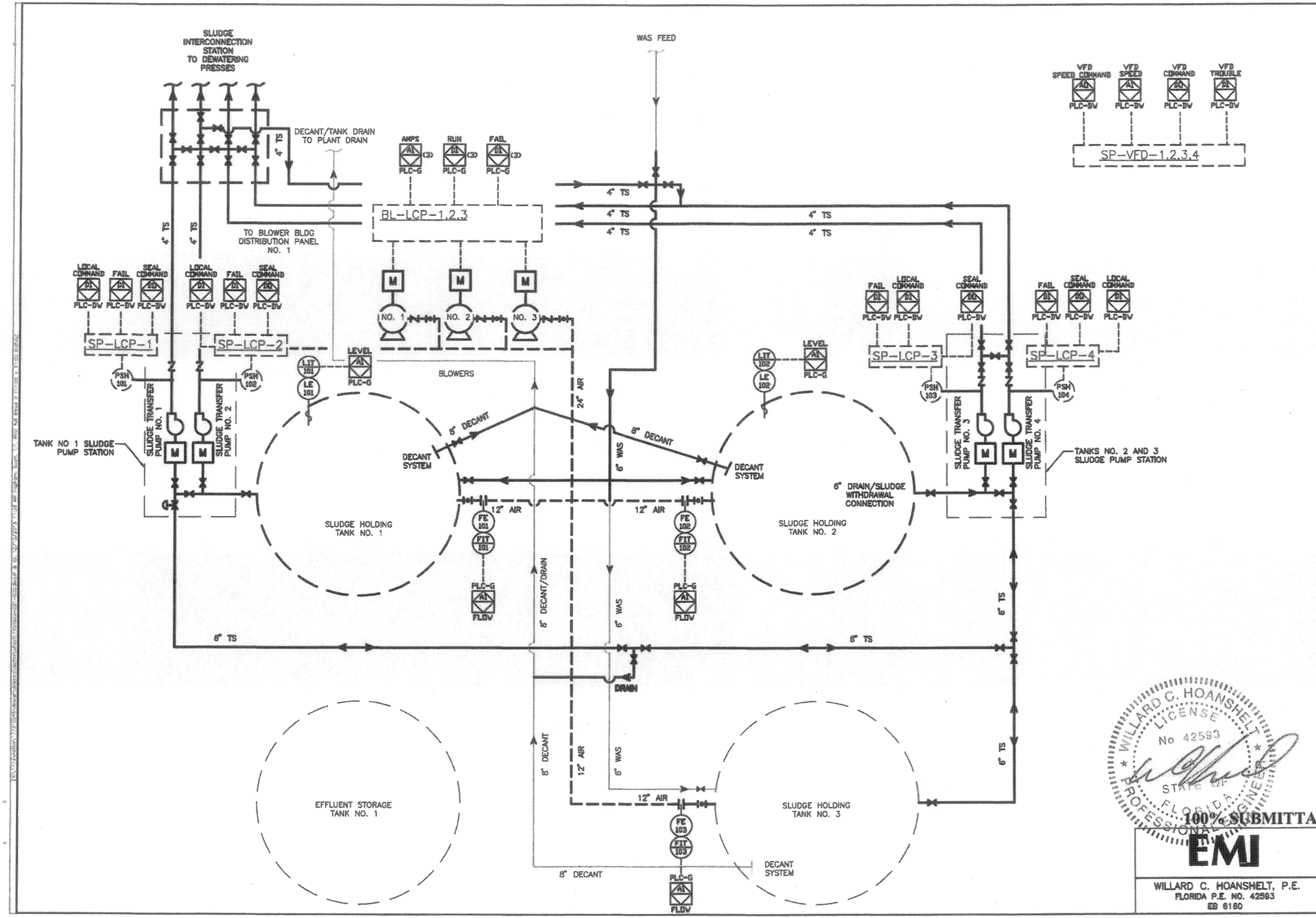

MANATEE COUNTY, FLORIDA
PUBLIC WORKS DEPARTMENT
ENGINEERING SERVICES
1022 26th Avenue East
Bradenton, FL 34208

NORTH WATER RECLAMATION FACILITY
SLUDGE HOLDING IMPROVEMENTS
PROCESS AND INSTRUMENTATION DIAGRAM

NO.	REVISION DESCRIPTION	BY	DATE

PROJECT #	177310545	
SURVEY #	000	
SEC./TWN./RGE	26/33S/18E	
SCALE	N.T.S.	
	BY	DATE
SURVEYED	GPY	05/10/13
DESIGNED	KKB	05/23/13
DRAWN	SRP	05/23/13
CHECKED	JRG	12/10/13

WILLARD C. HOANSHELT, P.E.
FLORIDA P.E. # 42593

WILLARD C. HOANSHELT
LICENSE
No 42593
STATE OF FLORIDA
PROFESSIONAL ENGINEER

100% SUBMITTAL

EMI

WILLARD C. HOANSHELT, P.E.
FLORIDA P.E. NO. 42593
EB 6160

Signature & Date

SHEET I-2

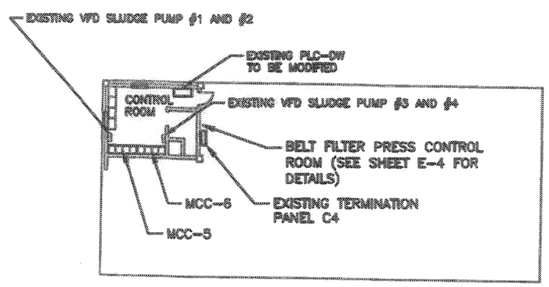

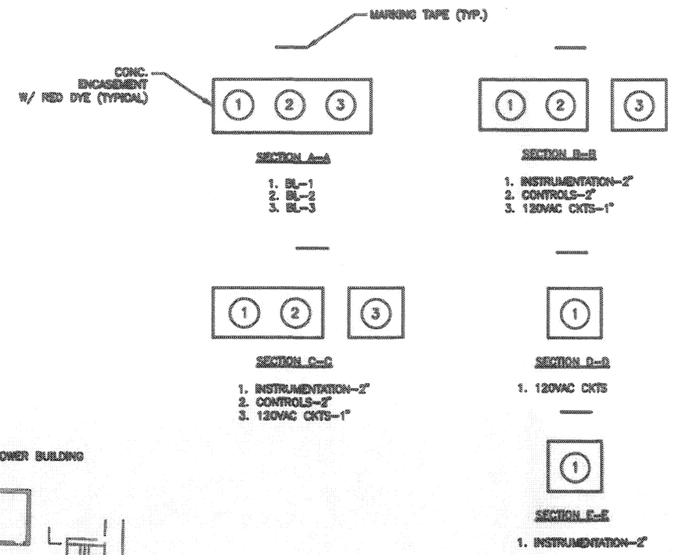

0 20 40
SCALE IN FEET

SHEET NOTES

1. CUT & PATCH CONCRETE TO MATCH EXISTING.

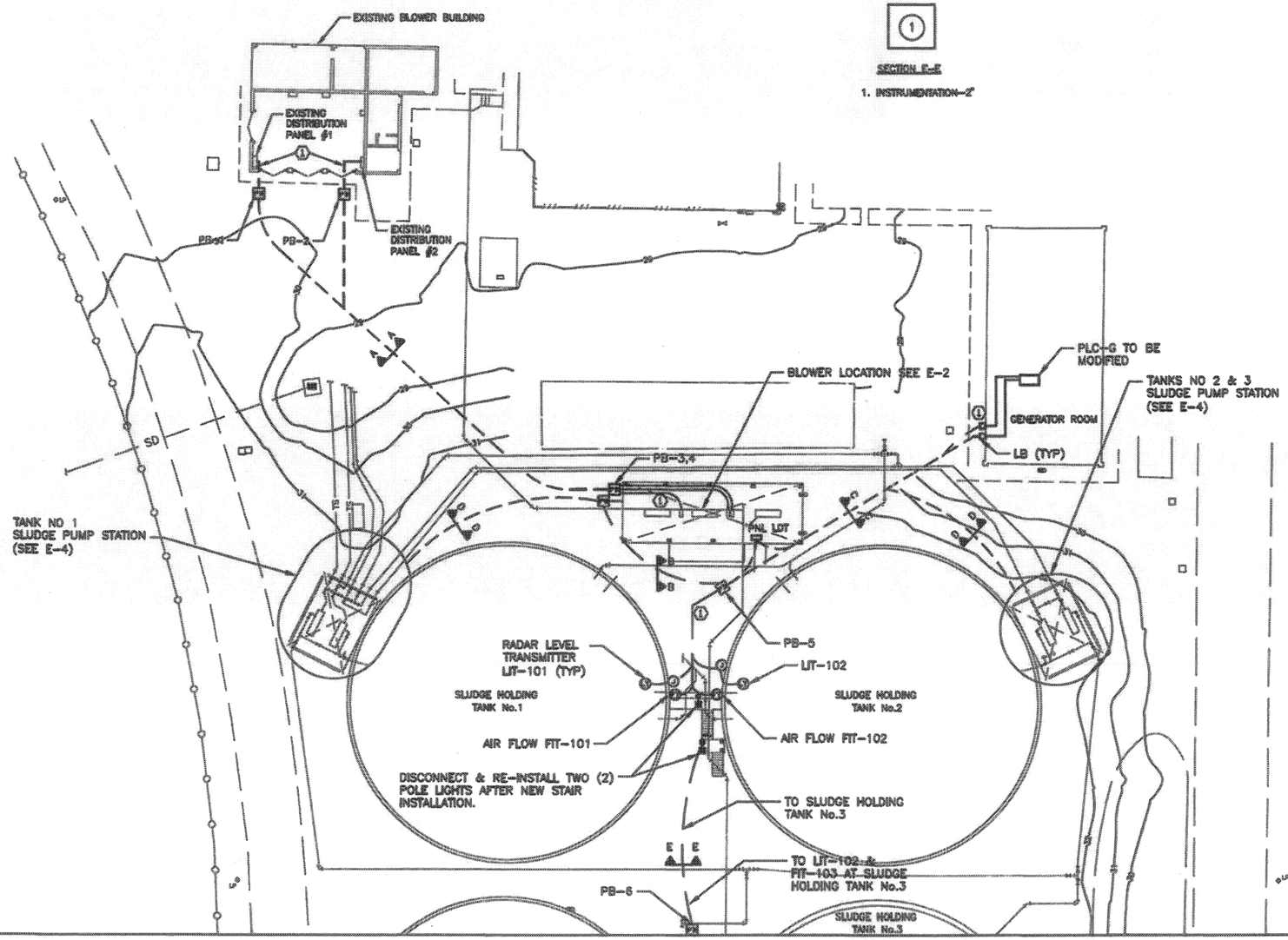

SYMBOLS

- HOME RUN TO PANELBOARD. NO. OF ARROWS INDICATE NO. OF CIRCUITS, HASH MARKS INDICATE NO. OF #12 AWG. CONDUCTORS. NO HASH MARKS INDICATE 2 #12 CONDUCTORS.
- CONDUIT CONCEALED IN WALL OR ABOVE CEILING.
- CONDUIT CONCEALED IN OR BELOW FLOOR OR UNDERGROUND.
- CONDUIT RUN EXPOSED. RUN PARALLEL OR PERPENDICULAR TO STRUCTURE OR WALL.
- FLEXIBLE CONDUIT WITH EQUIPMENT CONNECTION.
- FUSE
- MOLDED CASE CIRCUIT BREAKER

ABBREVIATIONS

A	AMPERES
AIC	ASYMMETRICAL INTERRUPTING CURRENT
BFP	BELT FILTER PRESS
BKR	BREAKER
BL	BLOWER
BLDG	BUILDING
CAB	CABINET
CIR	CIRCUIT
CONT	CONTROL
CP	CONTROL PANEL
CPT	CONTROL POWER TRANSFORMER
CKTS	CIRCUITS
EC	EMPTY CONDUIT
ELEC	ELECTRICAL
EM	EMERGENCY
ENCL	ENCLOSURE
ETM	ELAPSE TIME METER
EXIST	EXISTING
GEN	GENERATOR
GND	GROUND
HOA	HAND-OFF-AUTOMATIC
HP	HORSEPOWER
HPS	HIGH PRESSURE SODIUM
KCMIL	THOUSAND CIRCULAR MILS
KVA	KILOVOLT-AMPERES
LS	LIMIT SWITCH
LSCP	LIFT STATION CONTROL PANEL
LTG	LIGHTING
MAX	MAXIMUM
MB	MAIN BREAKER
MCC	MOTOR CONTROL CENTER
MCP	MOTOR CIRCUIT PROTECTOR
MFR	MANUFACTURER
MIN	MINIMUM
MTD	MOUNTED
NEC	NATIONAL ELECTRIC CODE
NEMA	NATIONAL ELECTRICAL MANUFACTURES ASSOCIATION
P	POLE
PB	PULL BOX
PLC	PROGRAMMABLE LOGIC CONTROLLER
PNL	PANEL
RGS	RIGID GALVANIZED STEEL
SW	SWITCH
SS	STAINLESS STEEL
TYP	TYPICAL
UG	UNDERGROUND
V	VOLT
VAC	VOLTS ALTERNATING CURRENT
W	WIRE
WP	WEATHER PROOF
XMFR	TRANSFORMER

GENERAL NOTES

1. ALL WORK SHALL COMPLY WITH N.E.C. AND LOCAL CODES.
2. REFER TO EQUIPMENT SHOP DRAWINGS FOR EXACT LOCATION OF CONDUITS.
3. INSTALL BOND WIRE IN ALL RACEWAYS PER N.E.C.
4. DO NOT SCALE THE ELECTRICAL DRAWINGS. REFER TO THE MECHANICAL, CIVIL AND STRUCTURAL DRAWINGS FOR DETAILED LOCATIONS OF ALL PIPING AND EQUIPMENT.

100% SUBMITTAL

EMI

WILLARD C. HOANSHELT, P.E.
FLORIDA P.E. NO. 42593
EB 6160

MANATEE COUNTY, FLORIDA
PUBLIC WORKS DEPARTMENT
ENGINEERING SERVICES

1022 26th Avenue East
Bradenton, FL 34208

NORTH WATER RECLAMATION FACILITY
SLUDGE HOLDING IMPROVEMENTS
ELECTRICAL SITE PLAN

NO.	REVISION DESCRIPTION	BY	DATE

PROJECT #	177310545
SURVEY #	000
SEC./TWN./RGE	26/33S/18E
SCALE	AS SHOWN

	BY	DATE
SURVEYED	GFY	05/10/13
DESIGNED	KKB	05/23/13
DRAWN	SRP	05/23/13
CHECKED	JRG	12/10/13

WILLARD C. HOANSHELT, P.E.
FLORIDA P.E. # 42593

Signature & Date

SHEET E-1

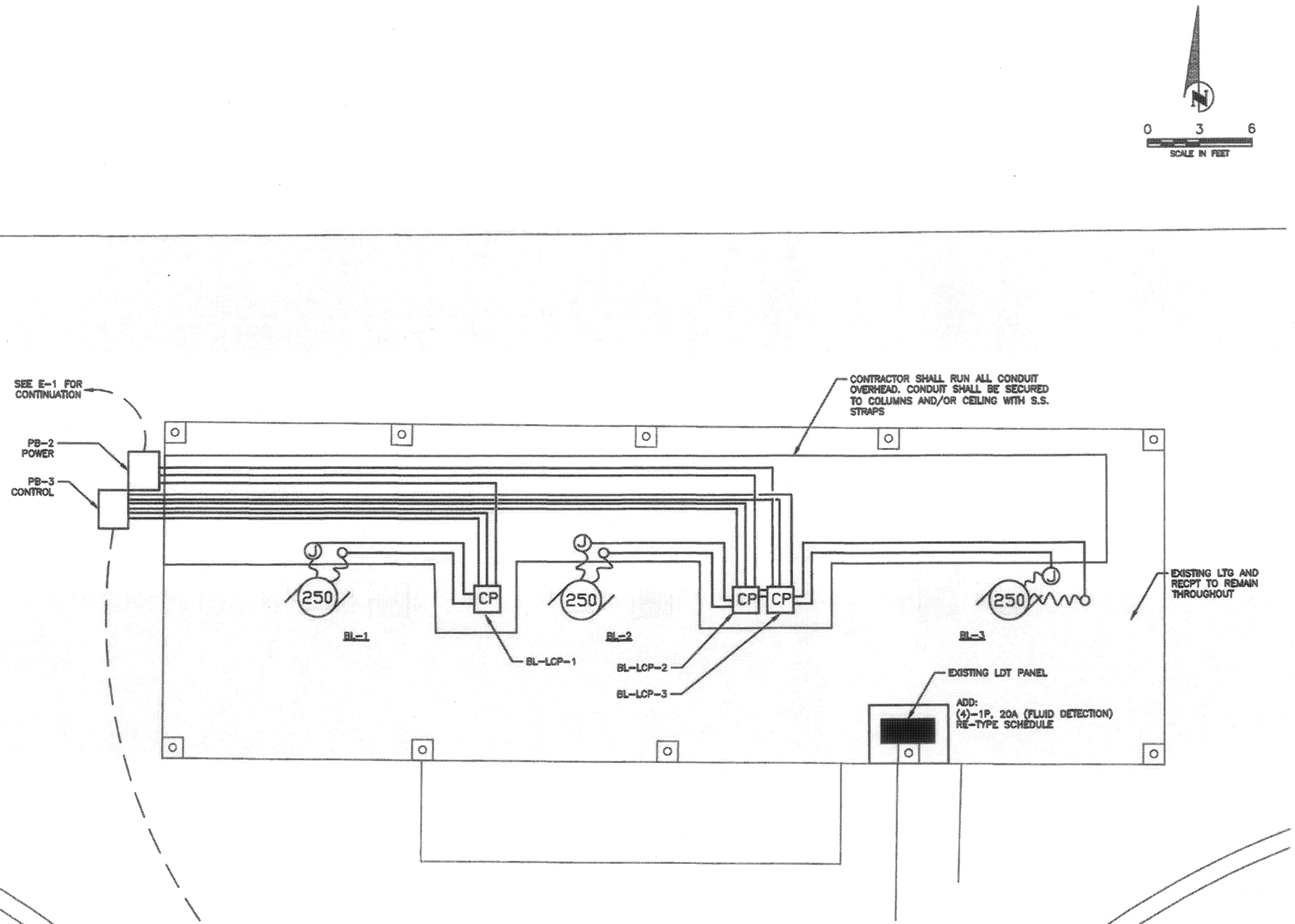

MANATEE COUNTY, FLORIDA
PUBLIC WORKS DEPARTMENT
ENGINEERING SERVICES

1022 26th Avenue East
Bradenton, FL 34208

NORTH WATER RECLAMATION FACILITY
SLUDGE HOLDING IMPROVEMENTS
BLOWER IMPROVEMENT
ELECTRICAL PLAN

NO.	REVISION DESCRIPTION	BY	DATE

PROJECT #	177310545
SURVEY #	000
SEC./TWN./RGE	26/33S/18E
SCALE	AS SHOWN

	BY	DATE
SURVEYED	GFY	05/10/13
DESIGNED	KKB	05/23/13
DRAWN	SRP	05/23/13
CHECKED	JRG	12/10/13

WILLARD C. HOANSHELT, LICENSE No 42593, STATE OF FLORIDA, PROFESSIONAL ENGINEER

100% SUBMITTAL

WILLARD C. HOANSHELT, P.E.
FLORIDA P.E. # 42593

EMI

WILLARD C. HOANSHELT, P.E.
FLORIDA P.E. NO. 42593
EB 6160

Signature & Date

SHEET E-2

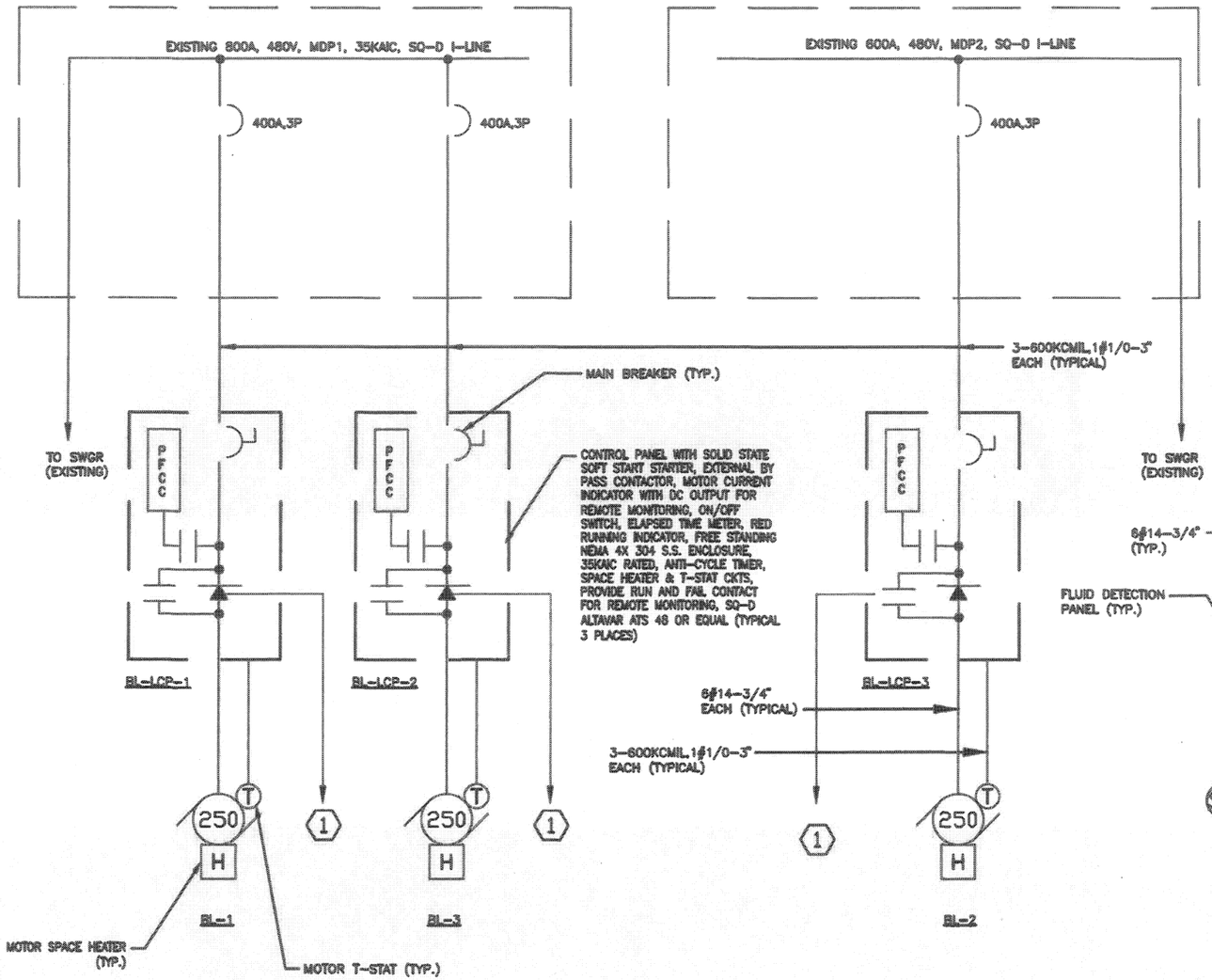

BLOWER RISER DIAGRAM

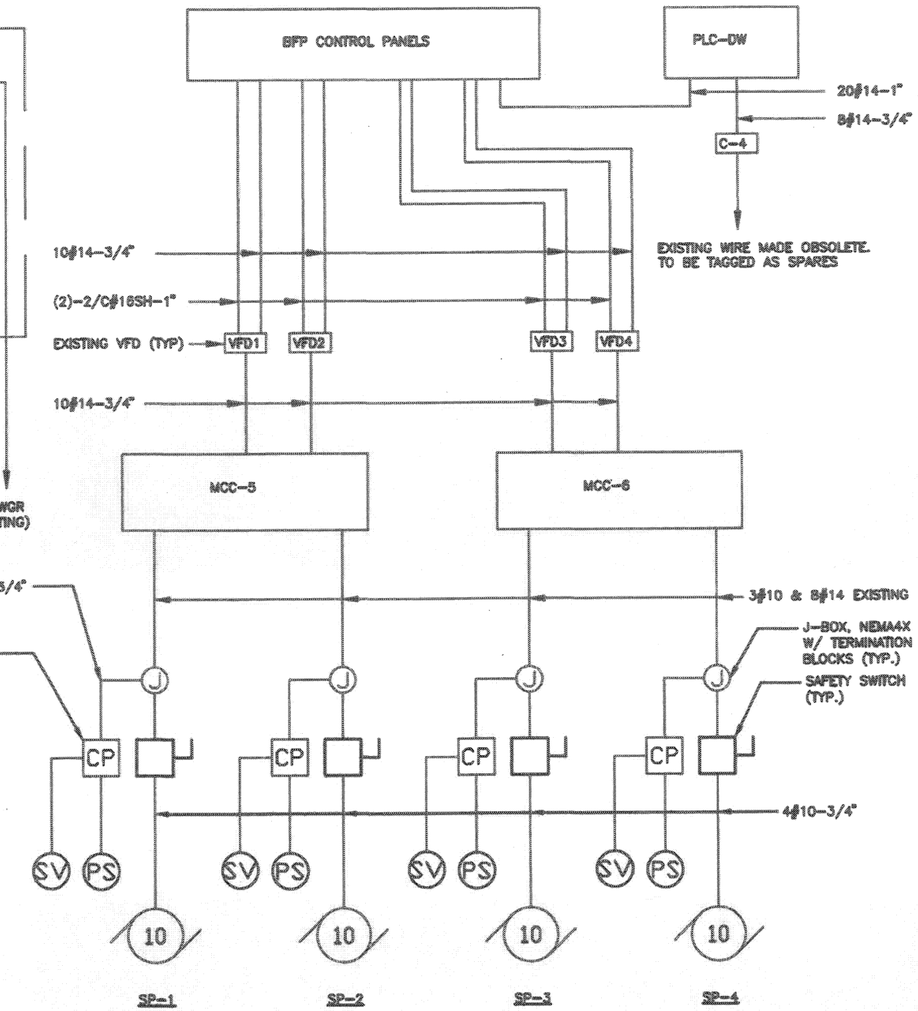

SLUDGE PUMP RISER DIAGRAM

RISER NOTES

(1) STATUS & ALARM TO PLC-G LOCATED IN GENERATOR BUILDING 4#14-3/4" & 1-2/C#16SH-3/4"

WILLARD C. HOANSHELT LICENSE No. 42593 STATE OF FLORIDA PROFESSIONAL ENGINEER

DEC 16 2013

100% SUBMITTAL

EMI

WILLARD C. HOANSHELT, P.E.
FLORIDA P.E. NO. 42593
EB 6160

MANATEE COUNTY, FLORIDA
PUBLIC WORKS DEPARTMENT
ENGINEERING SERVICES
1022 26th Avenue East
Bradenton, FL 34208

NORTH WATER RECLAMATION FACILITY SLUDGE HOLDING IMPROVEMENTS

POWER RISERS

NO.	REVISION DESCRIPTION	BY	DATE

PROJECT #	177310545
SURVEY #	000
SEC./TWN./RGE	28/33S/18E
SCALE	N.T.S.

	BY	DATE
SURVEYED	GPY	05/10/13
DESIGNED	KKB	05/23/13
DRAWN	SRP	05/23/13
CHECKED	JRG	12/10/13

WILLARD C. HOANSHELT, P.E.
FLORIDA P.E. # 42593

Signature & Date

SHEET E-3

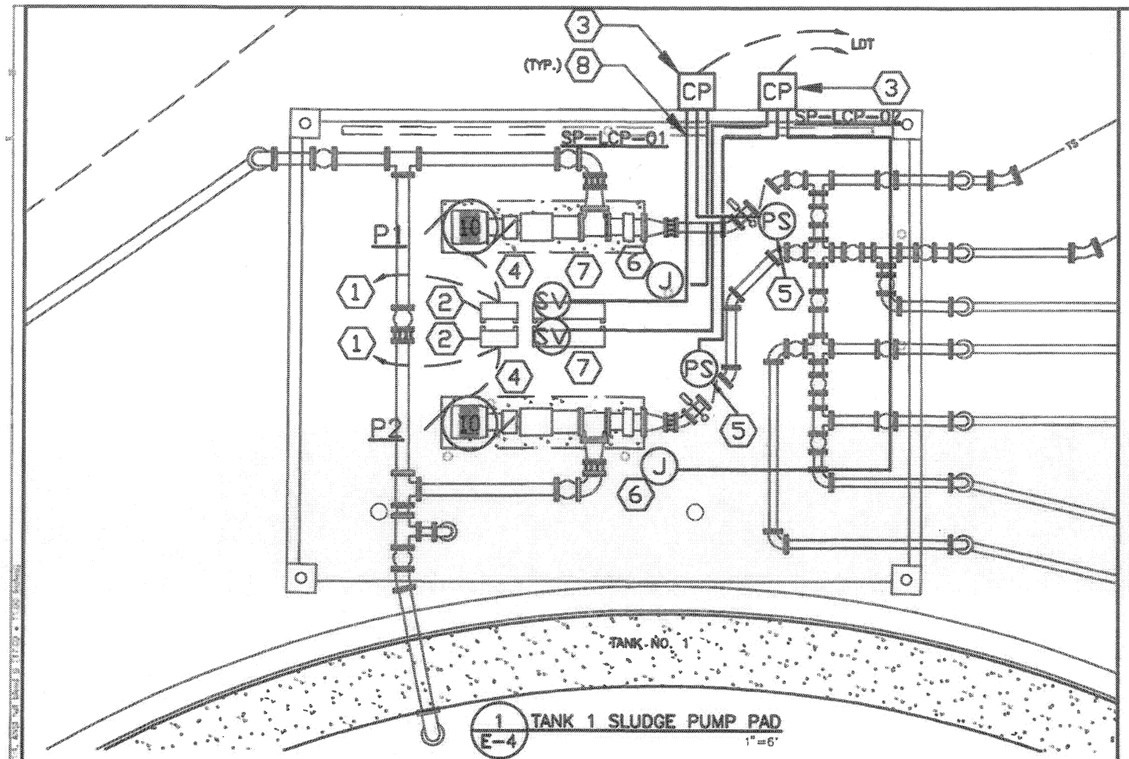

1 / E-4 TANK 1 SLUDGE PUMP PAD
1"=6'

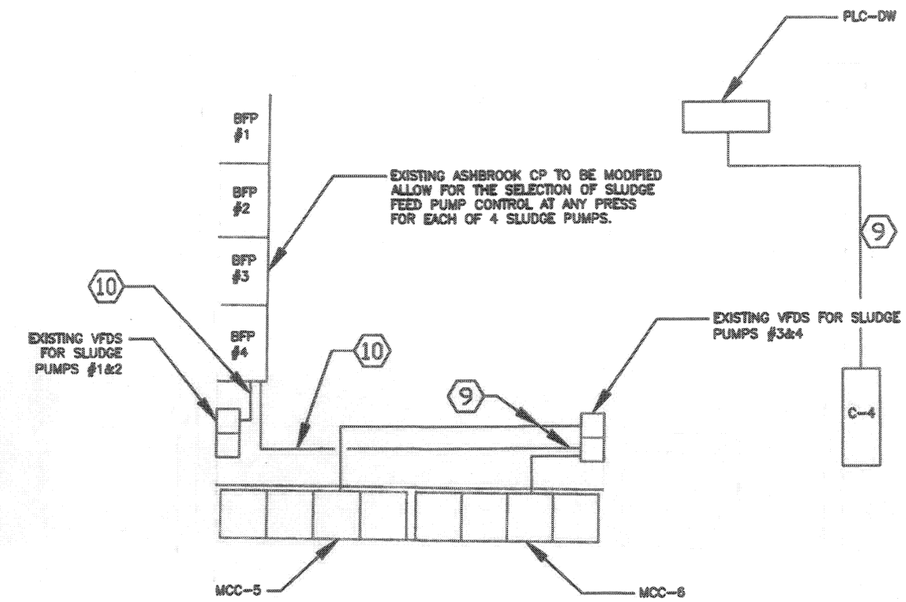

3 / E-4 CONTROL ROOM DE-WATERING BUILDING
1"=6'

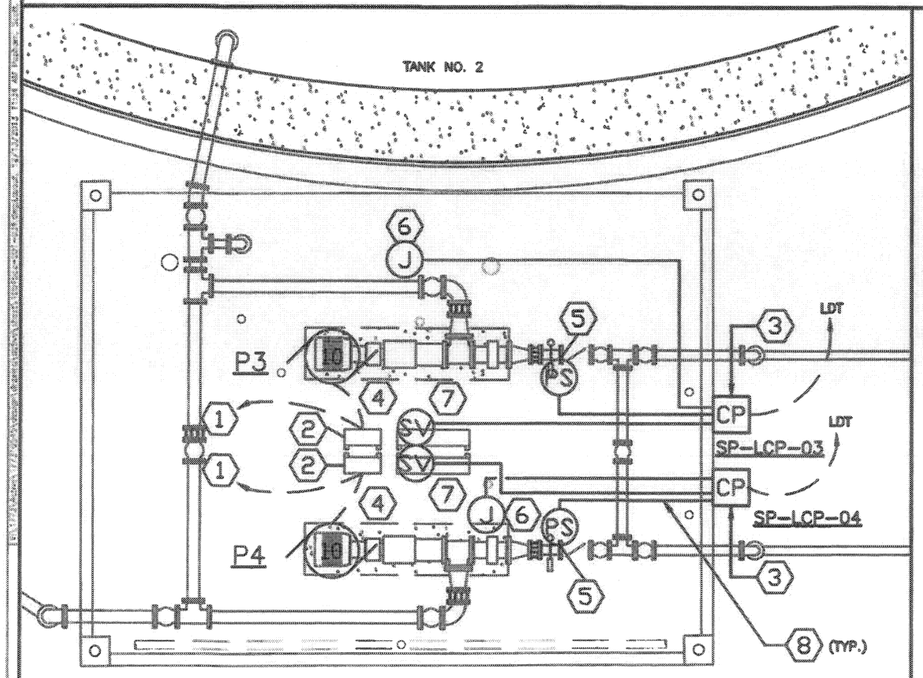

2 / E-4 TANKS 2 & 3 SLUDGE PUMP PAD
1"=6'

SHEET NOTES

1. RE-USE EXISTING CONDUIT & WIRE TO RESPECTIVE VFD
2. REPLACE EXISTING SAFETY SWITCH (NEMA 4X)
3. PROVIDE POWER TO NEW SEAL WATER & FLUID DETECTION CONTROL SYSTEM
4. EXISTING ELECTRICAL FEED TO PUMP, REPLACE WIRE
5. PRESSURE SWITCH FOR FLUID DETECTION CONTROL UNIT
6. RE-USE EXISTING CONTROL WIRE TO MCC-5&6, ADD SS J-BOX WITH TERMINATION BLOCKS
7. SEAL WATER SOLENOID
8. SURFACE MTD. CONDUIT (ALL 316 SS HARDWARE)
9. 8#14-3/4"
10. 6#14-3/4"

MODIFICATION OF BELT FILTER PRESS CONTROL PANEL

CONTRACTOR WILL MODIFY THE THREE EXISTING ASHBROOK SIMON-HARTLEY INC. OEM (ORIGINAL EQUIPMENT MANUFACTURER) BFP MAIN CONTROL PANELS SO THAT EACH PANEL SHALL HAVE THE CAPABILITY OF SELECTING 4 SLUDGE FEED PUMPS TO ANY PRESS. ONLY ONE WILL BE CAPABLE TO OPERATE TO ANY PRESS AT ANY GIVEN TIME. NO MODIFICATIONS WILL BE REQUIRED TO THE EXISTING BFP LOCAL CONTROL PANELS.

ALL NEW ELECTRICAL COMPONENTS SHALL MEET THE ORIGINAL O.E.M. DESIGN SPECIFICATIONS. NEW ELECTRICAL COMPONENTS FOR EACH EXISTING PANEL SHALL CONSIST OF, AT A MINIMUM, SIX (6) NEW RELAYS, ONE (1) NEW 4 POSITION SELECTOR SWITCH (REPLACING THE EXISTING 2 POSITION SELECTOR SWITCH), TWO (2) ADDITIONAL PILOT LIGHTS, FOUR (4) NEW LEGEND PLATES (SLUDGE PUMP 1, 2, 3, 4) AND ONE (1) LOT NEW TERMINAL SWITCH AND ONE (1) LOT WIRE.

PANEL MODIFICATIONS SHALL BE PERFORMED BY ORIGINAL EQUIPMENT MANUFACTURER QUALIFIED ELECTRICAL TECHNICIAN. UPON COMPLETION THE TECHNICIAN SHALL PERFORM STARTUP AND VERIFY SYSTEM IS FUNCTIONING PROPERLY. TECHNICIAN WILL INSTRUCT PLANT OPERATOR ON PROPER OPERATION OF THE MODIFIED CONTROL PANEL. MANUFACTURER SHALL PROVIDE UPDATED BFP MAIN CONTROL PANEL DRAWINGS SHOWING AS-BUILT CONDITION.

THIS WORK WILL BE PAID UNDER THE LUMP SUM ELECTRICAL AND INSTRUMENTATION BID ITEM.

STATE OF FLORIDA PROFESSIONAL ENGINEER No 42593
DEC 16 2013
100% SUBMITTAL

EMI

WILLARD C. HOANSHELT, P.E.
FLORIDA P.E. NO. 42593
EB 6160

MANATEE COUNTY, FLORIDA
PUBLIC WORKS DEPARTMENT
ENGINEERING SERVICES
1022 26th Avenue East
Bradenton, FL 34208

NORTH WATER RECLAMATION FACILITY
SLUDGE HOLDING IMPROVEMENTS
ELECTRICAL DETAILS

NO.	REVISION DESCRIPTION	BY	DATE

PROJECT #	177310545
SURVEY #	000
SEC./TWN./RGE	26/33S/19E
SCALE	1"=6'

	BY	DATE
SURVEYED	CFY	05/10/13
DESIGNED	KKB	05/23/13
DRAWN	SRP	05/23/13
CHECKED	JRG	12/10/13

WILLARD C. HOANSHELT, P.E.
FLORIDA P.E. # 42593

Signature & Date

SHEET E-4

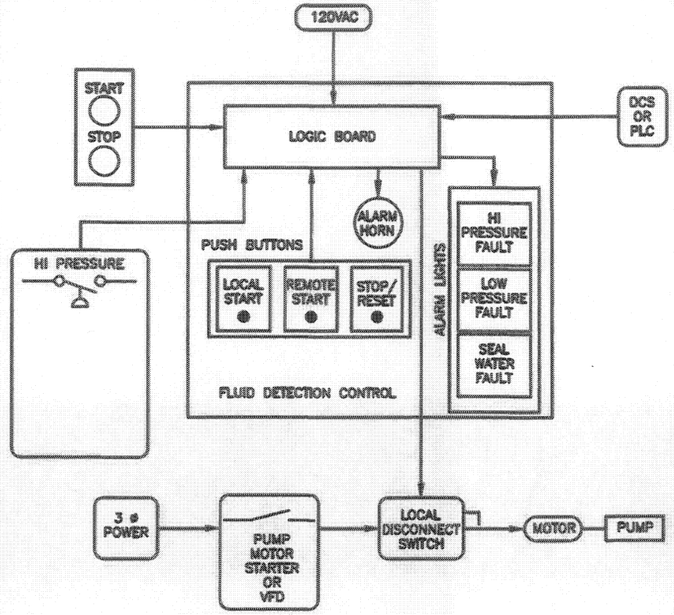

SLUDGE PUMP FLUID DETECTION CONTROLS
N.T.S.

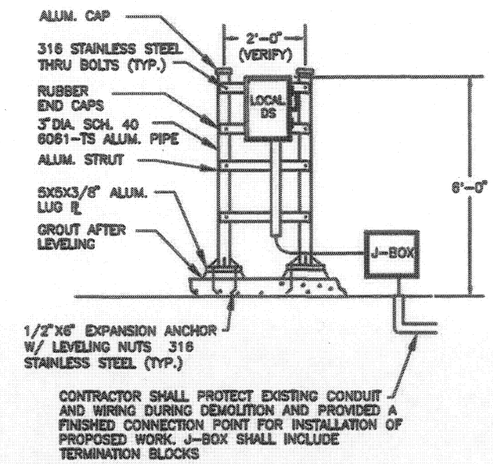

SLUDGE PUMP MOUNTING DETAIL
N.T.S.

NOTES:

1. UTILIZE EXISTING PUMP ELECTRICAL WIRES. CONTRACTOR SHALL EXTEND ELECTRICAL SERVICE FROM THE EXISTING SERVICE LOCATION TO THE PROPOSED LOCAL DISCONNECT. CONTRACTOR SHALL PROVIDE JUNCTION BOX IF NECESSARY. CONTRACTOR SHALL SUBMIT DETAILS FOR APPROVAL.
2. CONTRACTOR SHALL PROVIDE NEW CONDUIT FOR ALL ABOVE GRADE ELECTRICAL SERVICES. CONDUIT SHALL BE SECURED TO SLAB AND/OR EQUIPMENT PADS WITH S.S. STRAPS AND STRUT.

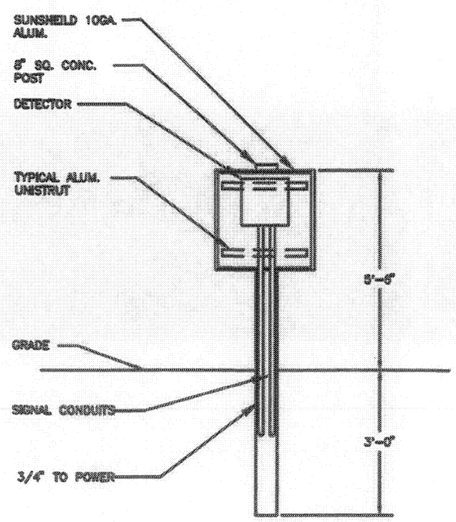

FLUID DETECTION MOUNTING DETAIL
N.T.S.

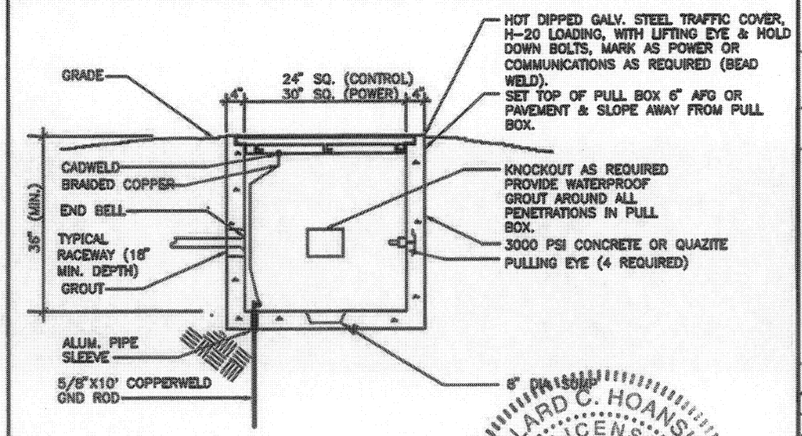

PULLBOX (PB)
N.T.S.

NOTES:

1. CONDUCTORS SHALL BE SECURED WITH NYLON SELF CLINCHING CABLE TIES.
2. PROVIDE RACK SUPPORTS FOR CABLES AND CONDUCTORS FOR SIDEWALL MTG..

WILLARD C. HOANSHELT LICENSE No 42593 STATE OF FLORIDA PROFESSIONAL ENGINEER

100% SUBMITTAL

EMI

WILLARD C. HOANSHELT, P.E.
FLORIDA P.E. NO. 42593
EB 6160

MANATEE COUNTY, FLORIDA
PUBLIC WORKS DEPARTMENT
ENGINEERING SERVICES
1022 26th Avenue East
Bradenton, FL 34208

NORTH WATER RECLAMATION FACILITY SLUDGE HOLDING IMPROVEMENTS

ELECTRICAL DETAILS

NO.	REVISION DESCRIPTION	BY	DATE

PROJECT #	177310545
SURVEY #	000
SEC./TWN./RGE	26/33S/18E
SCALE	1"=5'

	BY	DATE
SURVEYED	GPY	05/16/13
DESIGNED	KKB	05/23/13
DRAWN	SRP	05/23/13
CHECKED	JRD	12/10/13

WILLARD C. HOANSHELT, P.E.
FLORIDA P.E. # 42593

Signature & Date

SHEET E-5