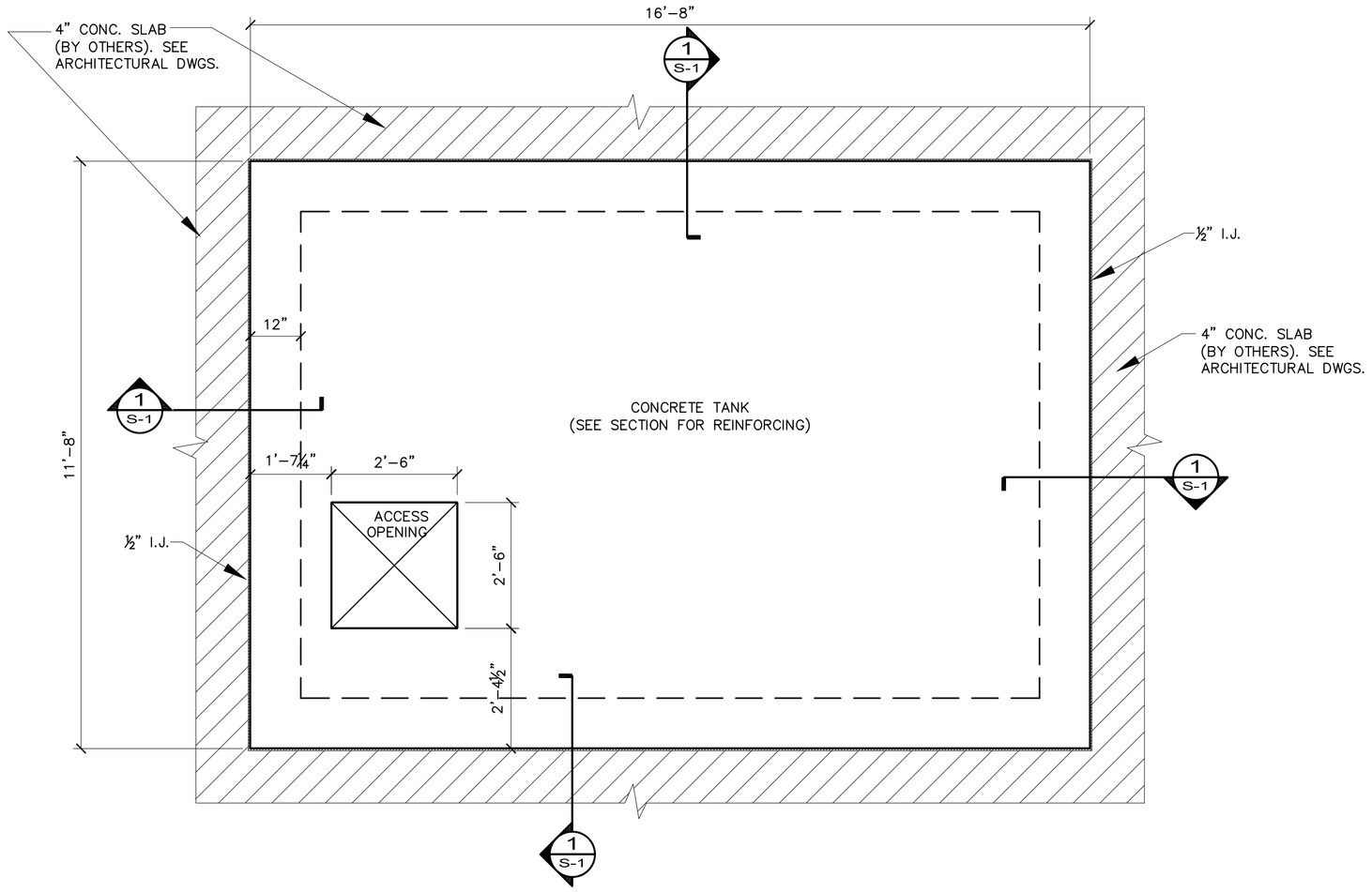

LINCON PARK WATER TANK PLAN

SCALE 1/2" = 1'-0"

NOTE:
1. VERIFY ALL DIMENSIONS W/ ARCHITECTURAL DRAWINGS. SEE ARCHITECTURAL DRAWINGS FOR ADDITIONAL INFORMATION.

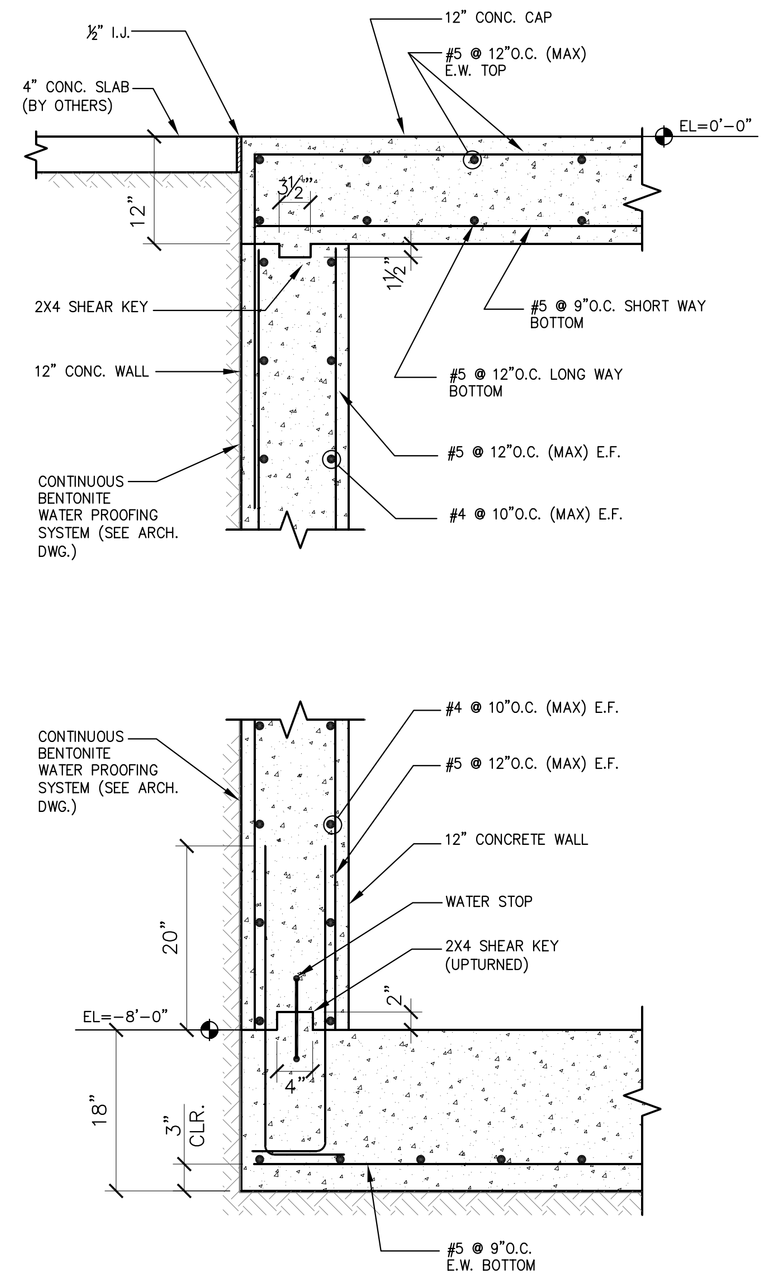

SECTION 1

SCALE 1" = 1'-0"

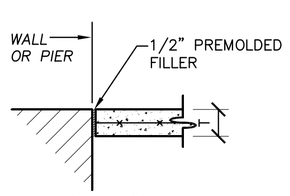

ISOLATION JOINT (IJ)

SCALE: NTS

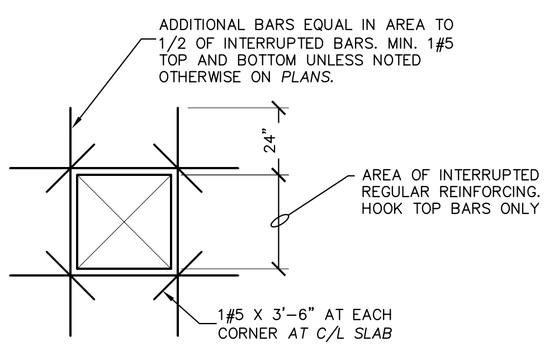

1. OMIT ADDED BARS AT OPENINGS OF 10" OR LESS AND RUN NORMAL REINFORCING BY SIDE OF OPENING. 2. HOOK BARS AT AFFECTED ENDS WHERE BARS CANNOT BE EXTENDED PAST OPENING. 3. OPENINGS SHALL BE SHOWN ON THE STEEL PLACING DRAWINGS AND REINFORCED ACCORDINGLY.

TYP. REINFORCEMENT AT SLAB OPENING

SCALE: NTS

TYPICAL DETAILS

Structural Notes

GENERAL NOTES: STRUCTURAL DRAWINGS SHALL BE USED IN CONJUNCTION WITH JOB SPECIFICATIONS AND ARCHITECTURAL, MECHANICAL, ELECTRICAL, PLUMBING, AND SITE DRAWINGS. CONSULT THESE DRAWINGS FOR SLEEVES, DEPRESSIONS, AND OTHER DETAILS NOT SHOWN ON STRUCTURAL DRAWINGS.

ALL DIMENSIONS AND CONDITIONS MUST BE VERIFIED IN THE FIELD. ANY DISCREPANCIES SHALL BE BROUGHT TO THE ATTENTION OF THE ENGINEER BEFORE PROCEEDING WITH THE AFFECTED PART OF THE WORK.

THE STRUCTURE IS DESIGNED TO BE SELF SUPPORTING AND STABLE AFTER THE BUILDING IS COMPLETE. IT IS THE CONTRACTOR'S RESPONSIBILITY TO DETERMINE ERECTION PROCEDURES AND SEQUENCE TO INSURE SAFETY OF THE BUILDING AND ITS COMPONENTS DURING ERECTION. THIS INCLUDES THE ADDITION OF NECESSARY SHORING, SHEETING, TEMPORARY BRACING, GUYS OR TIEDOWNS.

DESIGN LOADS: THE STRUCTURAL SYSTEM FOR THIS BUILDING HAS BEEN DESIGNED IN ACCORDANCE WITH THE FLORIDA BUILDING CODE, 2007 W/ 2009 SUPPLIMENTS. THE FOLLOWING SUPERIMPOSED LOADINGS HAVE BEEN UTILIZED:

MECHANICAL AREAS:
LIVE LOAD –250 psf.
ADDED DEAD LOAD –5 psf.

SHOP DRAWING REVIEW: SHOP DRAWINGS WILL BE REVIEWED FOR GENERAL COMPLIANCE WITH THE DESIGN INTENT OF THE CONTRACT DOCUMENTS ONLY. IT SHALL BE THE RESPONSIBILITY OF THE CONTRACTOR TO VERIFY COMPLIANCE WITH THE CONTRACT DOCUMENTS AS TO QUANTITY, LENGTH, ELEVATIONS, DIMENSIONS, ETC.

ALL SHOP DRAWINGS SHALL BE REVIEWED BY THE CONTRACTOR PRIOR TO SUBMITTAL TO THE ARCHITECT/ENGINEER. DRAWINGS SUBMITTED WITHOUT REVIEW WILL BE RETURNED UNCHECKED.

IN ALL INSTANCES THE CONTRACT DOCUMENTS WILL GOVERN OVER THE SHOP DRAWINGS UNLESS OTHERWISE SPECIFIED IN WRITING BY THE ENGINEER.

FOUNDATIONS: ARE DESIGNED FOR AN ALLOWABLE SOIL BEARING PRESSURE OF 2,000 psf ON COMPACTED FILL. BEFORE CONSTRUCTION COMMENCES, SOIL BEARING CAPACITY SHALL BE VERIFIED BY A SUBSURFACE INVESTIGATION, AS WELL AS FIELD AND LABORATORY TESTS PERFORMED BY A CERTIFIED TESTING LABORATORY, WHOSE REPORT SHALL INCLUDE ANALYSIS AND RECOMMENDATIONS FOR SITE PREPARATION IN ORDER TO BEAR THE FOUNDATION LOADS. ABOVE REPORT SHALL BE SUBMITTED TO THE STRUCTURAL ENGINEER FOR REVIEW BEFORE FOUNDATION CONSTRUCTION BEGINS.

FORMWORK AND SHORING: NO STRUCTURAL CONCRETE SHALL BE STRIPPED UNTIL IT HAS REACHED AT LEAST TWO–THIRDS OF THE 28 DAY DESIGN STRENGTH. DESIGN, ERECTION AND REMOVAL OF ALL FORMWORK, SHORES AND RESHORES SHALL MEET THE REQUIREMENTS SET FORTH IN ACI STANDARDS 347 AND 301.

PLUMBING SLEEVES: MINIMUM SLEEVE SPACING SHALL BE THREE DIAMETERS CENTER TO CENTER OF THE LARGER SLEEVE OR 6" CLEAR BETWEEN SLEEVES, WHICHEVER IS GREATER. PRIOR TO CONSTRUCTION SLEEVE LOCATIONS AND SIZES SHALL BE APPROVED BY THE ENGINEER.

REINFORCING STEEL: SHALL BE ASTM A615 GRADE 60 DEFORMED BARS, FREE FROM OIL, SCALE AND RUST AND PLACED IN ACCORDANCE WITH THE TYPICAL BENDING DIAGRAM AND PLACING DETAILS OF ACI STANDARDS AND SPECIFICATIONS. SECURE APPROVAL OF SHOP DRAWINGS PRIOR TO COMMENCING FABRICATION.

CONCRETE: SHALL BE PER AN APPROVED MIX DESIGN PROPORTIONED TO ACHIEVE A STRENGTH AT 28 DAYS AS LISTED BELOW WITH A PLASTIC AND WORKABLE MIX:

5000 psi FOR ALL STRUCTURAL CONCRETE.

CONCRETE SHALL BE PLACED AND CURED ACCORDING TO ALL STANDARDS AND SPECIFICATIONS.

SUBMIT PROPOSED MIX DESIGN WITH RECENT FIELD CYLINDER OR LAB TESTS FOR REVIEW PRIOR TO USE. MIX SHALL BE UNIQUELY IDENTIFIED BY MIX NUMBER OR OTHER POSITIVE IDENTIFICATION. MIX SHALL MEET THE REQUIREMENTS OF ASTM C33 FOR COARSE AGGREGATE. CONCRETE SHALL COMPLY WITH ALL THE REQUIREMENTS OF ASTM STANDARD C94 FOR MEASURING, MIXING, TRANSPORTING, ETC. CONCRETE TICKETS SHALL BE TIME STAMPED WHEN CONCRETE IS BATCHED. THE MAXIMUM TIME ALLOWED FROM THE TIME THE MIXING WATER IS ADDED UNTIL IT IS DEPOSITED IN ITS FINAL POSITION SHALL NOT EXCEED ONE AND ONE HALF (1–1/2) HOURS. IF FOR ANY REASON THERE IS A LONGER DELAY THAN THAT STATED ABOVE, THE CONCRETE SHALL BE DISCARDED. IT SHALL BE THE RESPONSIBILITY OF THE TESTING LAB TO NOTIFY THE OWNER'S REPRESENTATIVE AND THE CONTRACTOR OF ANY NONCOMPLIANCE WITH THE ABOVE. ALL SLABS SHALL BE CURED USING A DISSIPATING CURING COMPOUND MEETING ASTM STANDARD C309 TYPE 1–D AND SHALL HAVE A FUGITIVE DYE. THE COMPOUND SHALL BE PLACED AS SOON AS THE FINISHING IS COMPLETED OR AS SOON AS THE WATER HAS LEFT THE UNFINISHED CONCRETE. ALL SCUFFED OR BROKEN AREAS IN THE CURING MEMBRANE SHALL BE RECOATED DAILY. CALCIUM CHLORIDES SHALL NOT BE UTILIZED; OTHER ADMIXTURES MAY BE USED ONLY WITH THE APPROVAL OF THE ENGINEER.

ALL CONCRETE MIX DESIGNS SHALL INCLUDE A WRITTEN DESCRIPTION INDICATING WHERE EACH PARTICULAR MIX IS TO BE PLACED WITHIN THE STRUCTURE.

ALL CONCRETE DESIGN MIX SUBMITTALS SHALL INCLUDE TESTED, STATISTICAL BACK–UP DATA AS PER CHAPTER 5 OF ACI 318.

WATER/CEMENT RATIO FOR CONCRETE SHALL NOT EXCEED 0.40 BY WEIGHT. PROVIDE CALCIUM NITRITE (DCI) ADDITIVE.

CONCRETE TESTING: AN INDEPENDENT TESTING LABORATORY SHALL PERFORM THE FOLLOWING TESTS ON CAST IN PLACE CONCRETE:

a)ASTM C143 – "STANDARD TEST METHOD FOR SLUMP OF PORTLAND CEMENT CONCRETE." SLUMP RANGE SHALL BE 4–6 INCHES.
b)ASTM C39 – "STANDARD TEST METHOD FOR COMPRESSIVE STRENGTH OF CYLINDRICAL CONCRETE SPECIMENS." A SEPARATE TEST SHALL BE CONDUCTED FOR EACH CLASS, FOR EVERY 50 CUBIC YARDS (OR FRACTION THEREOF), PLACED PER DAY. REQUIRED CYLINDER(S) QUANTITIES AND TEST AGE AS FOLLOWS:

1 AT 7 DAYS
2 AT 28 DAYS

ONE ADDITIONAL RESERVE CYLINDER TO BE TESTED UNDER THE DIRECTION OF THE ENGINEER, IF REQUIRED. IF 28 DAY STRENGTH IS ACHIEVED, THE ADDITIONAL CYLINDER(s) MAY BE DISCARDED.

PENETRATIONS: NO PENETRATIONS SHALL BE MADE IN ANY STRUCTURAL MEMBERS OTHER THAN THOSE LOCATED ON THESE DRAWINGS WITHOUT PREVIOUS APPROVAL OF THE ENGINEER.

CHEMICAL ANCHORS: SHALL BE AN EQUAL TWO PART EPOXY POLYMER INJECTION SYSTEM, SUCH AS RAMSET "EPCON", RAWL "FOIL–FAST" CARTRIDGE SYSTEM, DUR–O–WAL "DUR–O–PAIR" EPOXY ANCHOR, HILTI HIT RE 500 ADHESIVE EPOXY, OR ENGINEER APPROVED SUBSTITUTION, INSTALLED IN ACCORDANCE WITH MANUFACTURERS INSTRUCTIONS. INSTALLERS SHALL BE TRAINED BY THE MANUFACTURER'S REPRESENTATIVE.

Wilson Structural Consultants, Inc.
8731 PROFESSIONAL PKWY. WEST (941) 907-4789
SUITE 101 SARASOTA, FLORIDA FAX(941) 907-0576

TO THE BEST OF MY KNOWLEDGE AND ABILITY, THE COMPLETED STRUCTURE DEPICTED ON THE PLANS COMPLIES WITH THE APPLICABLE MINIMUM BUILDING CODES.

FILE: 10-147

Cert. of Authorization #9099

UGARTE & ASSOCIATES, INC.
ARCHITECTS PLANNERS
434 9th AVENUE WEST
PALMETTO, FLORIDA 34221
PHONE (941)729–5691
FAX (941)729–5692
AA-C001654

Water Tank Plan, Section, Structural Notes and Typ. Details

MANATEE COUNTY
LINCOLN SPLASH PARK
501 17th Street East,
Palmetto, FL

REVISIONS:

PROJECT NO:
DATE: 08-27-10
DRAWN BY: –
CHK'D BY: –

© UGARTE & ASSOCIATES, INC. 2010

ENGINEER OF RECORD
RICHARD D. WILSON
FL P.E. # 37784

SHEET
S-1