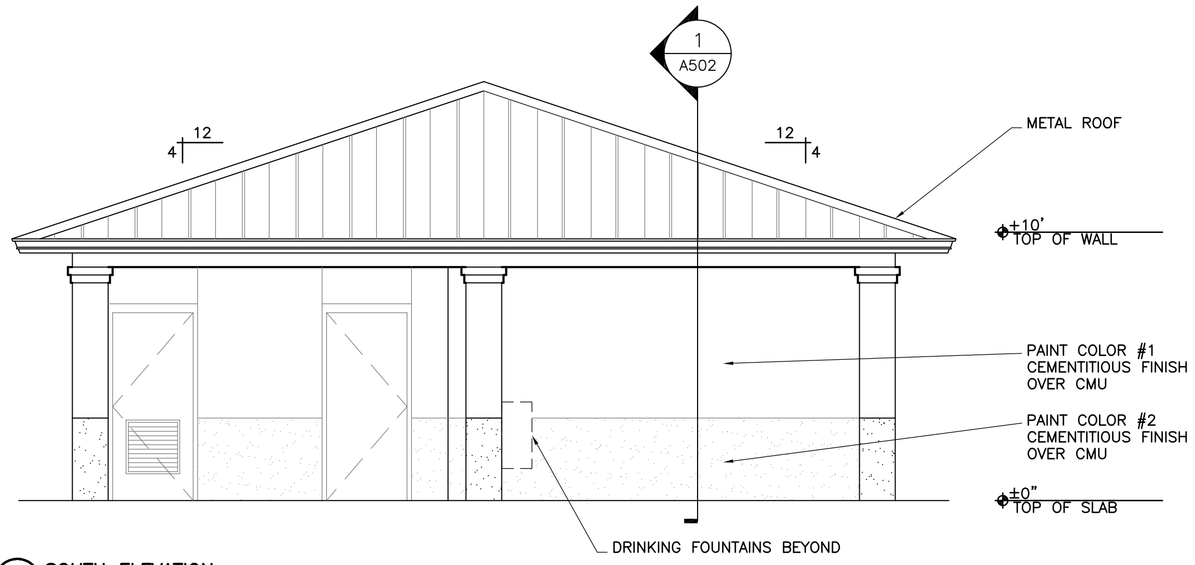

1 SOUTH ELEVATION
1/4" = 1'-0"

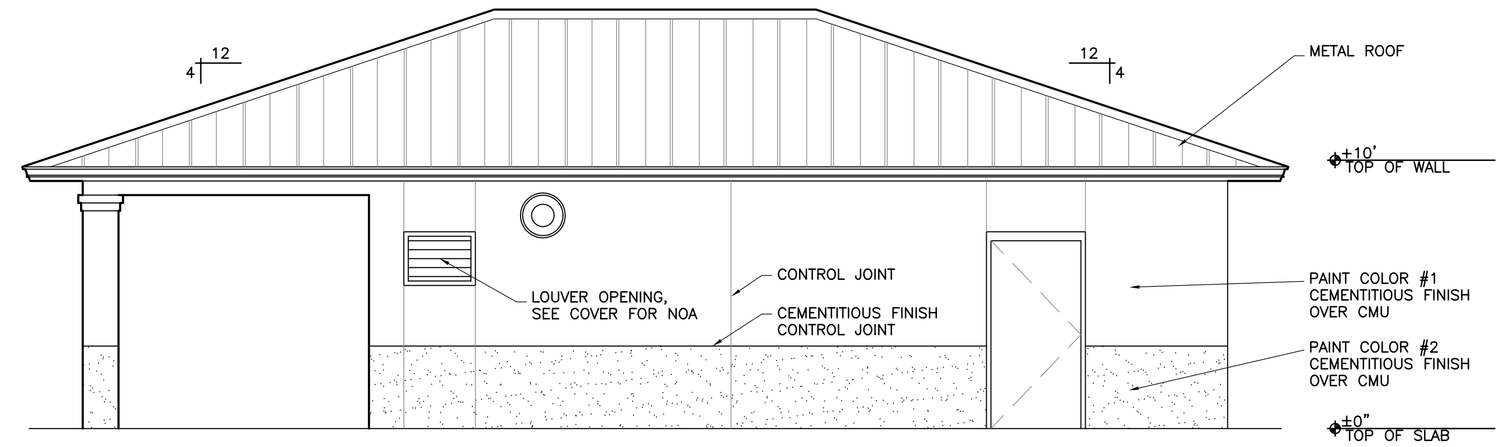

2 EAST ELEVATION
1/4" = 1'-0"

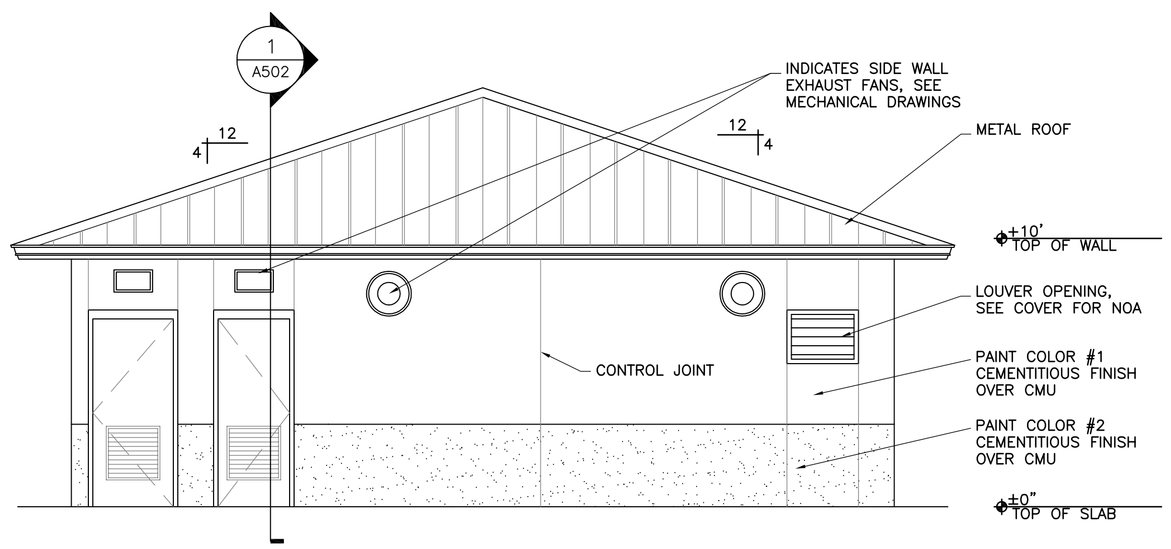

3 NORTH ELEVATION
1/4" = 1'-0"

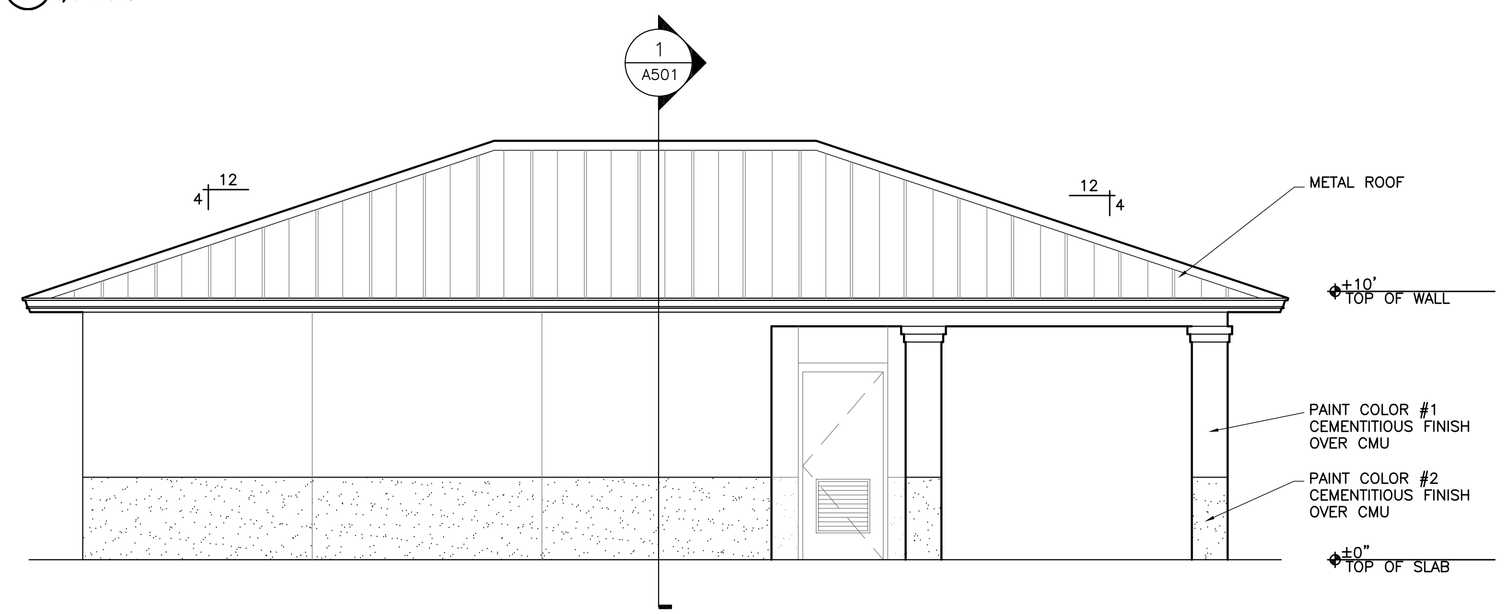

4 WEST ELEVATION
1/4" = 1'-0"

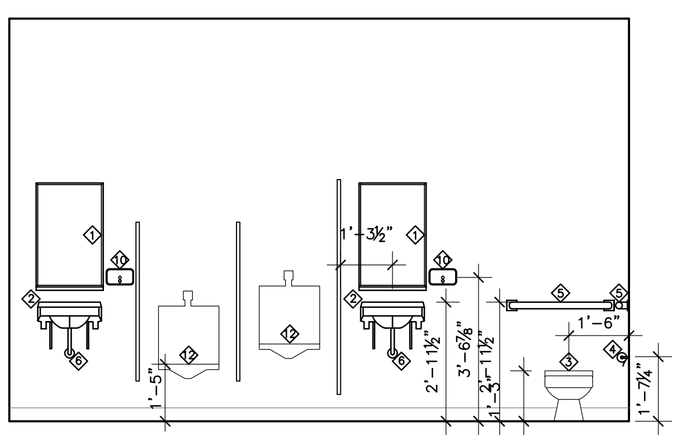

'MEN'S ELEVATION "A"

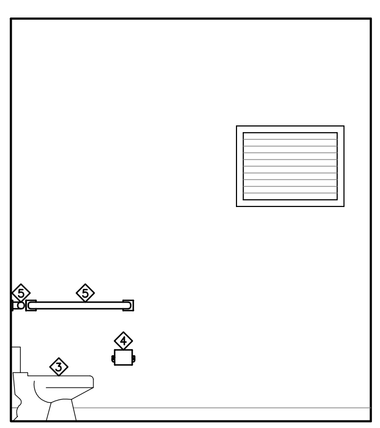

'MEN'S ELEVATION "B"

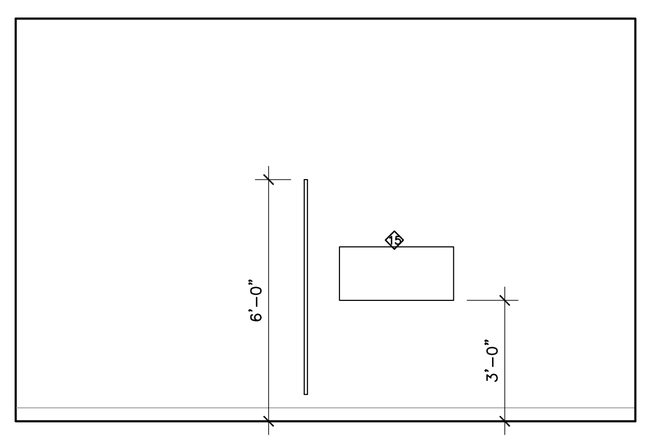

'MEN'S ELEVATION "C"

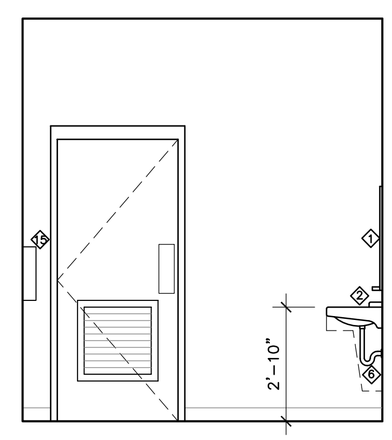

'MEN'S ELEVATION "D"

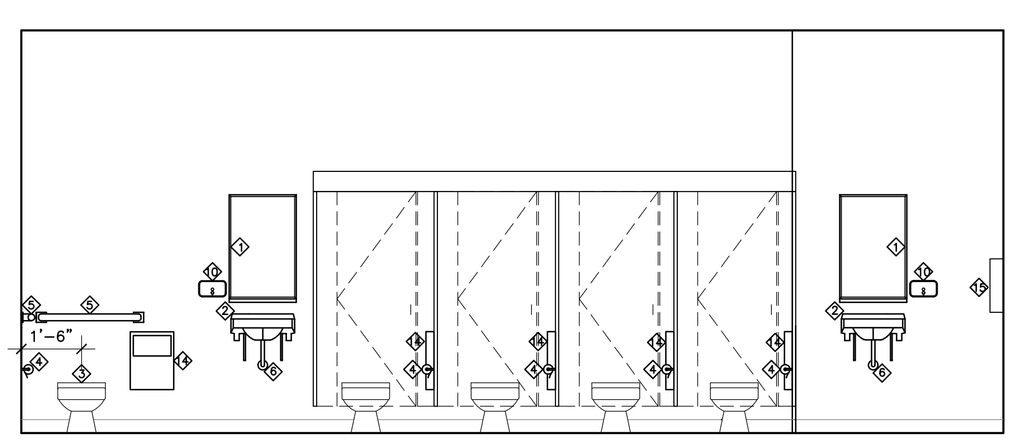

'WOMEN'S ELEVATION "E"

'WOMEN'S ELEVATION "F"

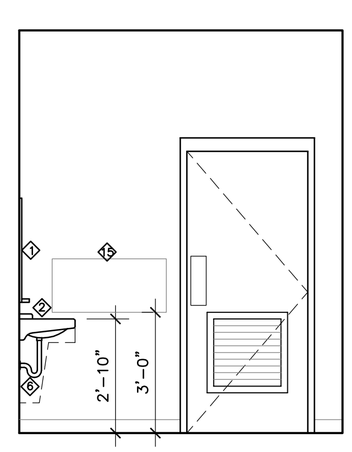

'WOMEN'S ELEVATION "G"

5 RESTROOM ELEVATIONS
3/8" = 1'-0"

ACCESSORY NOTES:

1. ACCESSORIES AND INSTALLATION TO COMPLY WITH FEDERAL A.D.A. REQUIREMENTS AND CURRENT EDITION OF FLORIDA ACCESSIBILITY CODE FOR BUILDING CONSTRUCTION.
2. GRAB BARS SHALL BE LOCATED 33"–36" ABOVE FINISHED FLOOR AND SHALL HAVE AN OUTSIDE DIAMETER OF 1 1/2" AND SHALL PROVIDE A CLEARANCE OF 1 1/2" BETWEEN THE RAIL AND THE WALL. GRAB BARS SHALL BE DESIGNED, CONSTRUCTED AND INSTALLED SO AS TO WITHSTAND A LOAD OF 250 POUNDS APPLIED AT ANY POINT, EITHER DOWNWARD OR HORIZONTALLY.
3. PROVIDE PRODUCTS OF SAME MFR. FOR EACH TYPE OF ACCESSORY UNIT UNLESS OTHERWISE DIRECTED.
4. INSTALL ACCESSORIES ACCORDING TO MFRS. WRITTEN INSTRUCTIONS.
5. COORDINATE LOCATIONS WITH OTHER WORK TO PREVENT INTERFERENCE WITH CLEARANCES REQUIRED FOR ACCESS BY DISABLED PERSONS, PROPER INSTALLATION, ADJUSTMENT, OPERATION, CLEANING, AND SERVICING.
6. MEN'S BATHROOM SIGNAGE SHALL HAVE THE MALE SYMBOL AND THE HANDICAPPED SYMBOL. WOMEN'S BATHROOM SIGNAGE SHALL HAVE THE FEMALE SYMBOL AND THE HANDICAPPED SYMBOL. LOCATE @ 60" AFF ON THE WALL ADJACENT TO THE LATCH SIDE OF THE DOOR. DO NOT MOUNT ON THE DOOR. SEE DOOR DETAIL ON SHEET A202
7. FLUSH CONTROLS FOR ALL TOILETS SHALL BE MOUNTED ON THE WIDE SIDE OF THE TOILET.
8. ALL BATHROOM FIXTURES, PARTITIONS, ACCESSORIES & FIXTURE ARRANGEMENTS & LOCATION DIMENSIONS TYPICAL FOR ALL BATHROOMS.
9. LOCATION OF ALL BATHROOM ACCESSORIES TYPICAL FOR EACH BATHROOM.
10. CONTRACTOR TO SUBMIT BATHROOM FIXTURE AND ACCESSORY SCHEDULE WITH PRODUCT CUT SHEETS TO ARCHITECT FOR APPROVAL PRIOR TO INSTALLATION.

SYMBOL LEGEND

1. MIRROR AS REQ'D (40" IS TO REFLECTIVE SURFACE)
2. H–CAP LAV 19"X17" WALL MTD TO SOLID BLK'G W/ A.D.A. APPROVED FAUCET
3. H–CAP WATER CLOSET. SEAT HT 17" TO 19"
4. TP HOLDER TYPICAL FOR EACH STALL
5. H–CAP GRAB BARS: 42" SIDE, 36" REAR, 1–1/2" ø MTD TO SOLID BLK'G CAPABLE OF SUPPORTING 250 LB
6. PROVIDE INSULATION AROUND ALL WATER PIPES & ABRASIVE SURFACES
7. NON–ABSORBENT WASHABLE FINISH ON ALL SURFACES
8. PAPER TOWEL DISPENSER W/ TRASH BIN
9. PAPER TOWEL DISPENSER
10. SOAP DISPENSER
11. PL VANITY TOP W DROP IN OVAL SINKS. USE A.D.A. APPROVED CLEARANCES AND FAUCET.
12. WALL HUNG URINAL
13. CERAMIC WALL TILE
14. OPTIONAL SANITARY NAPKIN DISPOSAL (WOMEN ONLY)
15. BABY CHANGING TABLE

UGARTE
& ASSOCIATES, INC.
ARCHITECTS PLANNERS
434 9th AVENUE WEST
PALMETTO, FLORIDA 34221
PHONE (941)729-5691
FAX (941)729-5692
AA-C001654

ELEVATIONS

MANATEE COUNTY - LINCOLN SPLASH PARK

501 17TH STREET EAST PALMETTO, FL 34221

REVISIONS:

PROJECT NO: 2009–46
DATE: 08.27.2010
DRAWN BY: –
CHK'D BY: –

© UGARTE & ASSOCIATES INC. 2010

CARLOS D. UGARTE
LIC. NO. AR-0010725

SHEET
A401

8/27/2010 2:04 PM Craig Feiner CAD DWG FILE: A401 ELEVATIONS.DWG