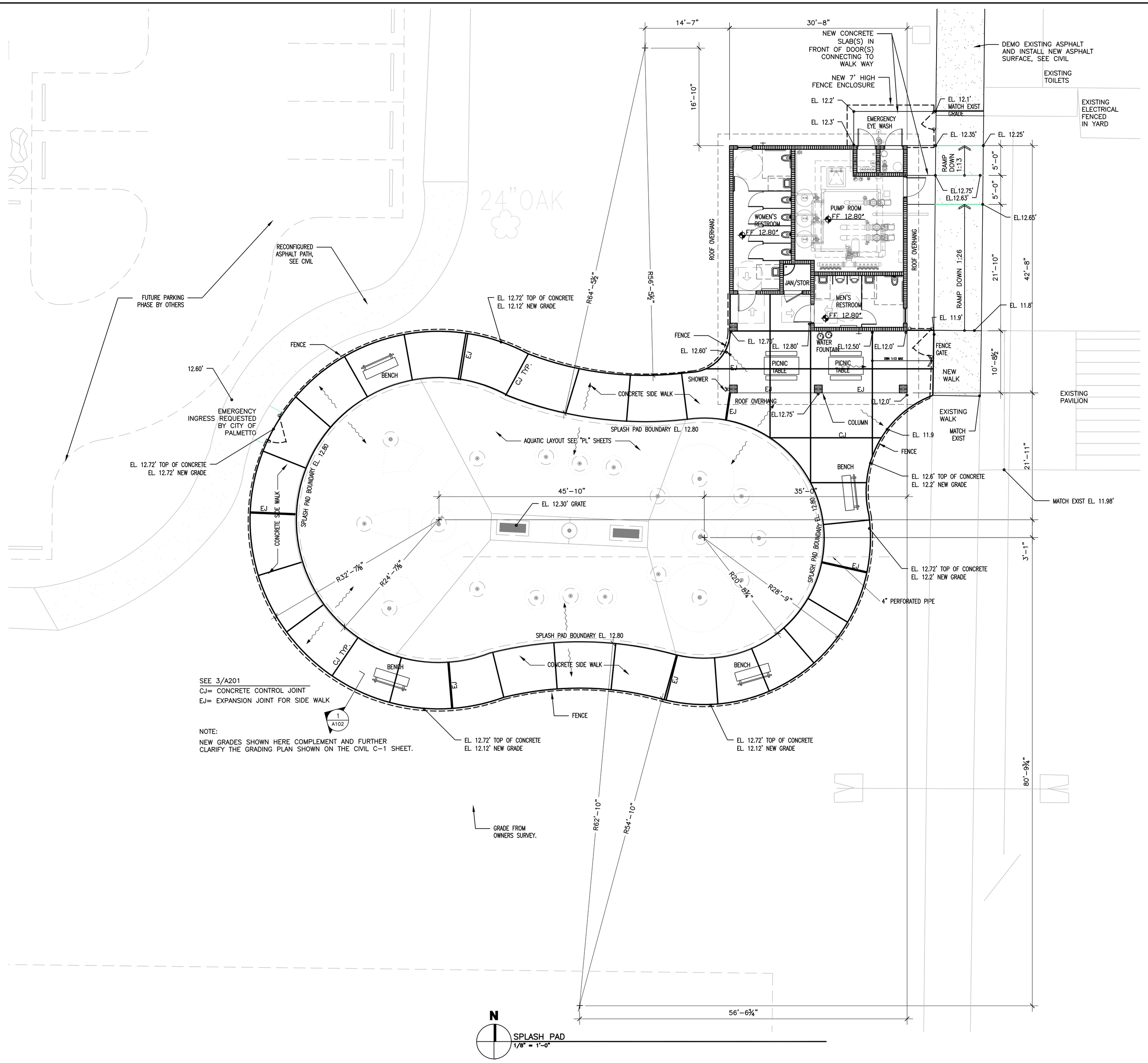

SPLASH PAD
1/8" = 1'-0"

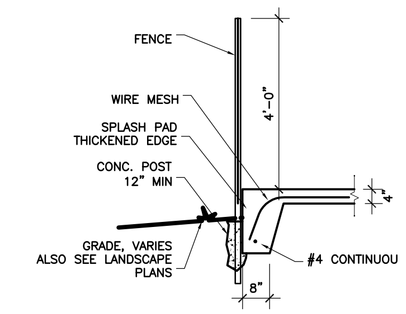

1 FENCE POST DETAIL
51/128" = 1'-0"

UGARTE & ASSOCIATES, INC.
ARCHITECTS PLANNERS
434 9th AVENUE WEST
PALMETTO, FLORIDA 34221
PHONE (941)729-5691
FAX (941)729-5692
AA-C001654

SPLASH PAD

MANATEE COUNTY - LINCOLN SPLASH PARK

501 17TH STREET EAST PALMETTO, FL 34221

REVISIONS:

PROJECT NO: 2009-46
DATE: 08.27.2010
DRAWN BY: -
CHK'D BY: -

© UGARTE & ASSOCIATES, INC. 2010

CARLOS D. UGARTE
LIC. NO. AR-0010725

SHEET
A102

9/9/2010 2:55 PM David Bishop CAD DWG FILE: A103 SPLASH PAD.DWG