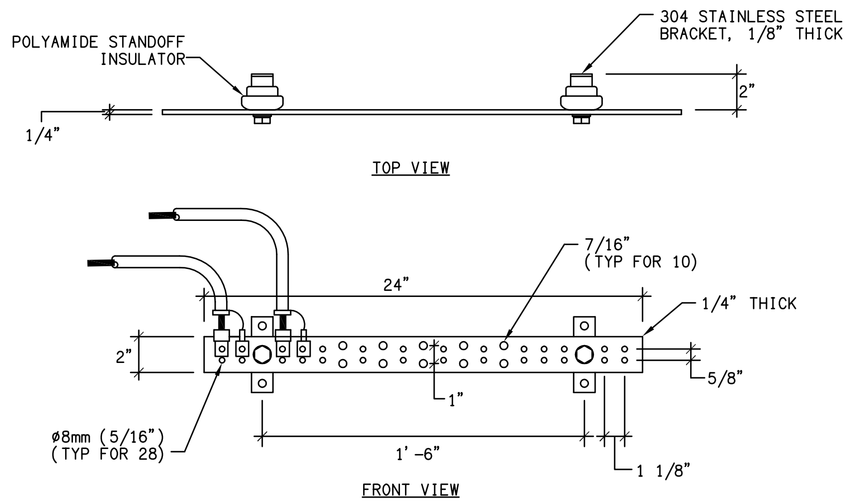

1 GROUND BUS DETAIL
E5.01 SCALE: NOT TO SCALE

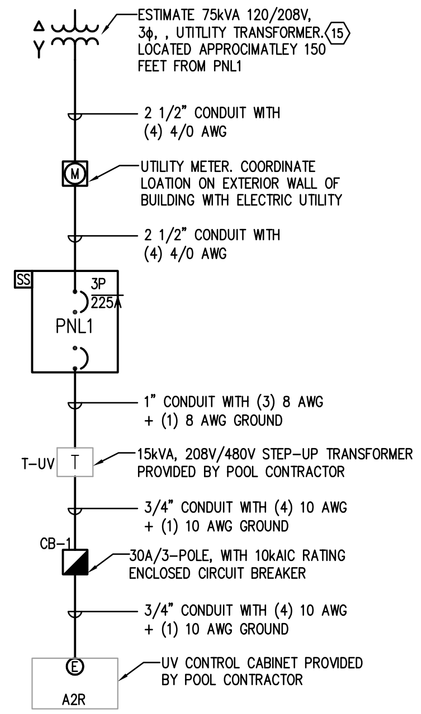

3 SINGLE LINE DIAGRAM
E5.01 SCALE: NOT TO SCALE
E3.01

VOLTAGE DROP:

OVERALL CALCULATED FEEDER VOLTAGE DROP FROM UTILITY TRANSFORMER TO PANEL PNL1 IS LESS THAN 1.4%. OVERALL BRANCH CIRCUIT VOLTAGE DROP IS LESS THAN 1.0%. (MAXIMUM ALLOWABLE FEEDER AND BRANCH CIRCUIT VOLTAGE DROP IS 2% AND 3% RESPECTIVELY BASED ON 13-413.1.ABC.1, FLORIDA BUILDING CODE 2007 INCLUDING SUPPLEMENTS.

SHORT CIRCUIT CALCULATIONS:

THE SHORT CIRCUIT AMPERE VALUES AT THE 208V PANELBOARD PNL1 IS BASED ON THE ESTIMATED 75kVA UTILITY TRANSFORMER WITH A MAXIMUM THREE-PHASE BOLTED FAULT CURRENT OF 10,416A. THE MAXIMUM FAULT CURRENT AT PANEL PNL1 BASED ON SKM SOFTWARE IS 6,365A.

PANEL PNL1

VOLTAGE:	120/208V	MAIN RATING:	225A	MOUNTING:	SURFACE				
PHASE:	3	MAIN TYPE:	MCB	MINIMUM AIC:	22,000				
SOURCE/LOCATION:	/PUMP RM								

LOAD DESCRIPTION	BREAKER TRIP	POLE		LOAD (KVA)	CKT. NO.		LOAD (KVA)		BREAKER TRIP	POLE	LOAD DESCRIPTION
M-FILTRATION PUMP A1A (10HP)	60	3		3.70	1	2	0.18		20	1	O-FLOW METER PWR SOURCE A1S
M-				3.70	3	4	0.18		15	1	O-CPU A1G (G)
M-				3.70	5	6	0.18		15	1	O-CHEMICAL CONTROLLER A1G (G)
M-ACTIVITY PUMP A2A-1 (10HP)	60	3		3.70	7	8	0.63		20	1	L-RESTRM & PUMP RMS LTS
M-				3.70	9	10	0.43		20	1	L-EXTERIOR LTS
M-				3.70	11	12	0.36		20	1	R-PUMP RM & EXT RECEPTACLES
M-CHLORINE BSTR PUMP A1K (3/4HP)	15	2		0.79	13	14	0.54		20	1	R-PUMP RM & EXT RECEPTACLES
M-				0.79	15	16	0.90		20	1	R-RESTRMS PUMP RM & EXT REC
M-LIFT STATION PUMP	20	1		1.18	17	18	0.10		20	1	O-TIME CLOCK TC
O-TRANSFORMER T-UV	60	3		1.70	19	20			20	1	SPARE
O-				1.70	21	22			20	1	SPARE
O-				1.70	23	24			20	1	SPARE
M-EF-3	15	1		1.18	25	26			20	1	SPARE
M-EF-2	20	1		1.18	27	28				1	SPACE
SPACE		1			29	30				1	SPACE
SPACE		1			31	32				1	SPACE
O-UV ALARM PANEL	20	1		0.60	33	34				1	SPACE
R-IRRIGATION CONTROLLER	20	1		0.60	35	36				1	SPACE
M-ACTIVITY PUMP A2A-2 (10HP)	60	3		3.70	37	38			30	3	O-TVSS
M-				3.70	39	40					O-TVSS
M-				3.70	41	42					O-TVSS

LOAD CALCULATIONS:	CONNECTED (KVA)	D.F.	CALCULATED (KVA)
LIGHTING	1.06	1.25	1.33
RECEPTACLES (FIRST 10 KVA)	2.40	1.00	2.40
RECEPTACLES (ABOVE 10 KVA)	0.00	0.50	0.00
HVAC	0.00	1.00	0.00
MOTOR	38.42	1.00	38.42
EQUIPMENT	0.00	1.00	0.00
APPLIANCE	0.00	1.00	0.00
OTHER	6.34	1.00	6.34
SPARE/SPACE	0.00	1.00	0.00
TOTAL (KVA) / (AMPS)	48.22 133.85		48.49 134.58

LOADS NOT INCLUDED IN CALCULATIONS (KVA):
0.00

BREAKER ACCESSORIES:
- (A) ARC-FAULT CIRCUIT INTERRUPTER
- (G) GROUND-FAULT CIRCUIT INTERRUPTER
- (L) BREAKER WITH LOCK-ON DEVICE
- (S) BREAKER WITH SHUNT TRIP

TOTAL CONNECTED PHA	16.12	KVA
TOTAL CONNECTED PHB	16.88	KVA
TOTAL CONNECTED PHC	15.22	KVA

REMARKS:
1.
2.

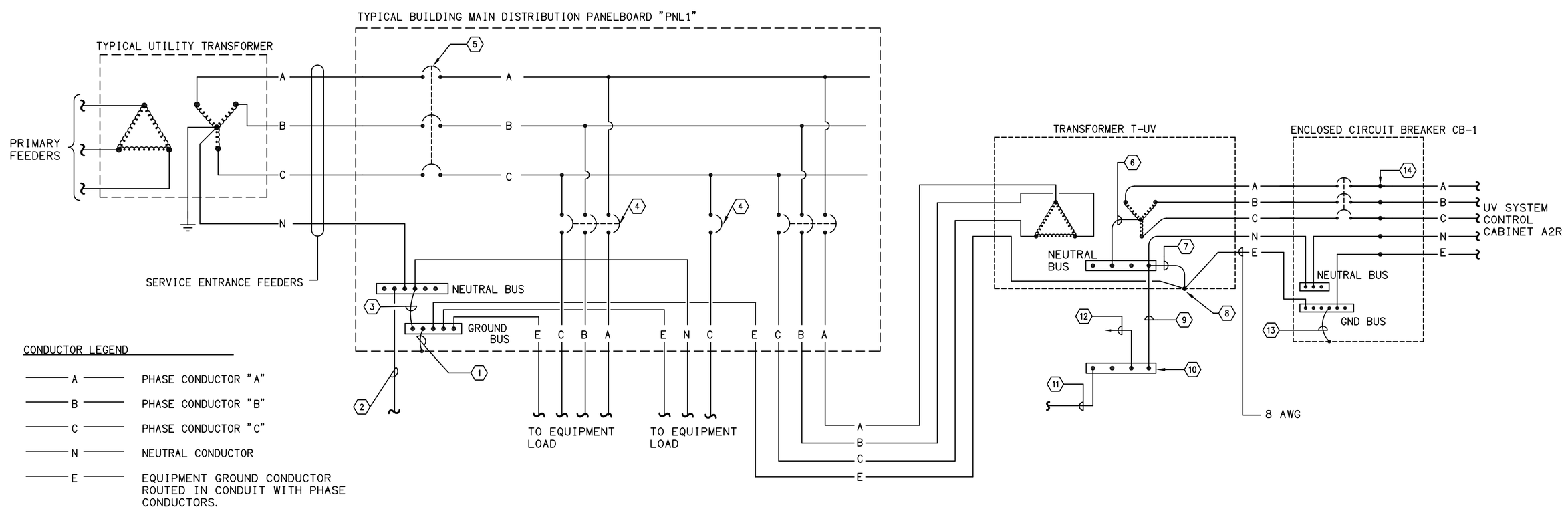

GROUNDING DIAGRAM GENERAL NOTES:

1. THE INTENT OF THIS DIAGRAM IS TO SHOW THE OVERALL POWER DISTRIBUTION SYSTEM GROUNDING CONNECTIONS. THE ACTUAL SIZE AND QUANTITY OF THE FEEDER CONDUCTORS ARE INDICATED ON THE ELECTRICAL SINGLE LINE DIAGRAM.

2 OVERALL GROUNDING DIAGRAM
E0.01 SCALE: NOT TO SCALE

KEY NOTES:

1. 4/0 AWG Cu EQUIPMENT BONDING JUMPER.
2. GROUNDING ELECTRODE CONDUCTOR WITH 3/0 AWG Cu IN 1" CONDUIT TO (3) 3/4" X 10' GROUND RODS CONFIGURED IN AN EQUILATERAL TRIANGLE. ALSO, WITH 4 AWG Cu IN 3/4" CONDUIT, CONNECT GROUND RODS TO CONCRETE ENCASED ELECTRODES. PROVIDE TEST WELLS FOR EACH GROUND ROD.
3. 2 AWG Cu MAIN BONDING JUMPER OR EQUIVALENT BUS.
4. TYPICAL PANELBOARD FEEDER CIRCUIT BREAKER.
5. PANELBOARD MAIN CIRCUIT BREAKER.
6. MANUFACTURE CONNECTION BETWEEN EXTERNAL NEUTRAL BUS AND INTERNAL NEUTRAL POINT OF THREE PHASE WINDING.
7. SYSTEM BONDING JUMPER CONNECTING THE EQUIPMENT GROUNDING CONDUCTORS OF THE SEPARATELY DERIVED SYSTEM TO THE GROUNDED CONDUCTOR. PROVIDE 8 AWG COPPER.
8. BONDING CONNECTION TO TRANSFORMER ENCLOSURE.
9. TRANSFORMER GROUNDING ELECTRODE TAP CONDUCTOR. PROVIDE 8 AWG COPPER.
10. ELECTRICAL ROOM WALL-MOUNTED GROUND BUS. SEE THIS SHEET FOR REQUIREMENTS.
11. TRANSFORMER(S) GROUNDING ELECTRODE CONDUCTOR. PROVIDE 3/4" CONDUIT WITH 6 AWG COPPER CONDUCTOR TO METAL WATER PIPE OR DRIVEN GROUND RODS.
12. TRANSFORMER(S) BONDING ELECTRODE CONDUCTOR. PROVIDE 3/4" CONDUIT WITH 8 AWG BONDING CONDUCTOR TO THE NEAREST AVAILABLE POINT OF THE INTERIOR METAL WATER PIPING SYSTEM(S) IN THE AREA SERVED BY THE TRANSFORMER.
13. EQUIPMENT BONDING JUMPER WITH SIZE 8 AWG.
14. TERMINATION POINT WITHIN CIRCUIT BREAKER FOR CONNECTION TO LOAD.
15. CONTACT LARRY RUSSO WITH FLORIDA POWER & LIGHT AT (941) 723-4424 FOR EXACT SIZE AND LOCATION OF UTILITY TRANSFORMER.

CONSTRUCTION DOCUMENTS

MEP
GRAEF
1059 Maitland Center Commons Blvd., Suite 200
Maitland, FL 32751
407 / 659 0553
407 / 659 0609 fax
www.graef-usa.com
CERT # 4270

GRAEF PROJECT #2009-4110

CAD DWG FILE: PLOT-ES01-104110.DWG

8/31/2010 3:25 PM

UGARTE & ASSOCIATES, INC.
ARCHITECTS PLANNERS
434 9th AVENUE WEST
PALMETTO, FLORIDA 34221
PHONE (941)729-5691
FAX (941)729-5692
AA-C001654

PANEL SCHEDULE, SINGLE LINE AND GROUNDING DIAGRAM

MANATEE COUNTY – LINCOLN SPLASH PARK
501 17TH STREET EAST PLAMETTO, FL 34221

REVISIONS:

PROJECT NO: 10-4110
DATE: 08.27.2010
DRAWN BY: MA
CHK'D BY: SRA

Sam Alexander
LIC. NO. 55422

SHEET
E5.01