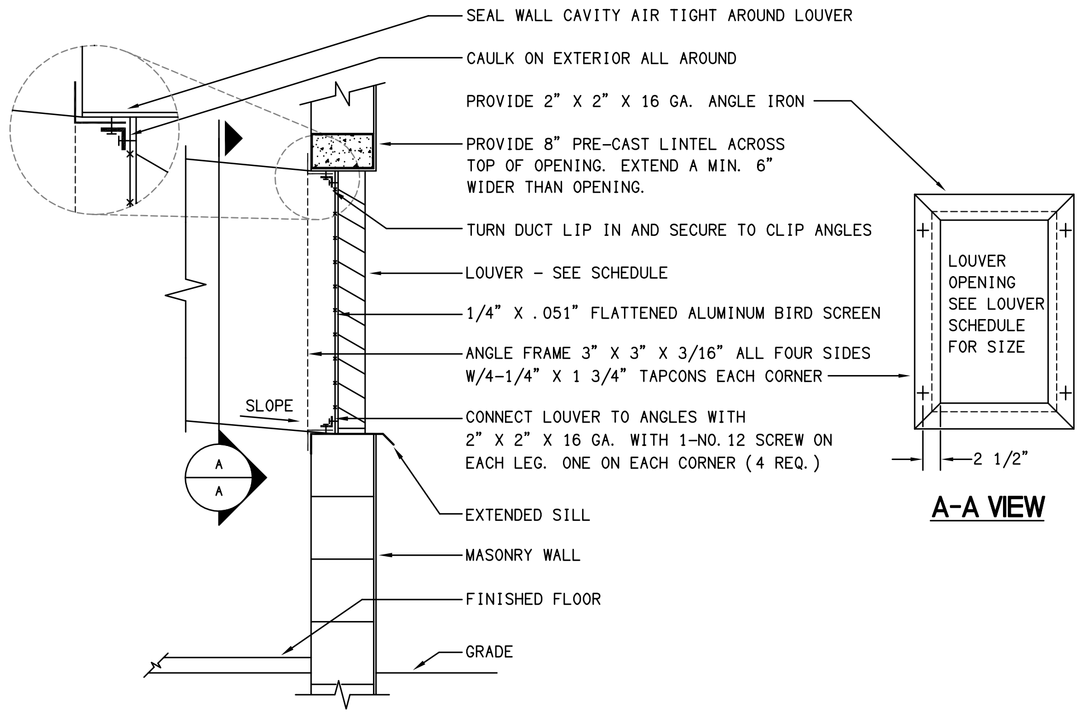

1 O/A INTAKE DETAIL - HOLLOW CMU WALL

SCALE: NOT TO SCALE M-MASTER-MS_LOUVER-01A

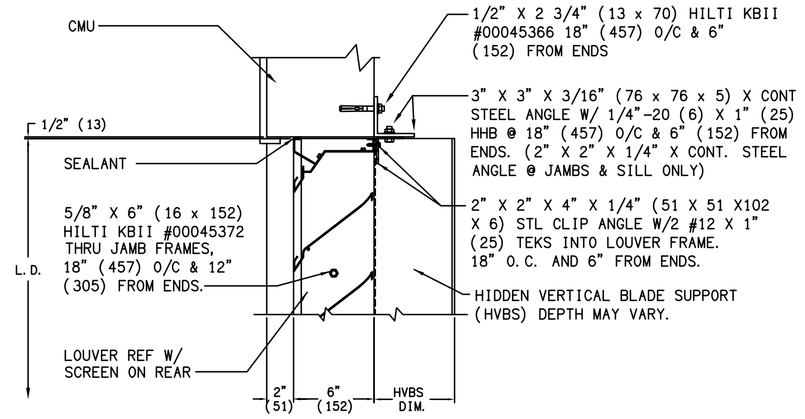

EHH-601D HEAD & JAMB DETAIL

NOA# 08-229.06
FLORIDA PRODUCT APPROVED NO. FL10088.1

NOTE: THIS DETAIL APPLIES TO ALL EXTERIOR VENTS AND LOUVERS TO MEET WINDLOAD REQUIREMENTS, FBC 16.

2 LOUVER ANCHORING DETAIL - HEAD AND JAMB

SCALE: NONE M-MASTER-MS_LOUVER-01B

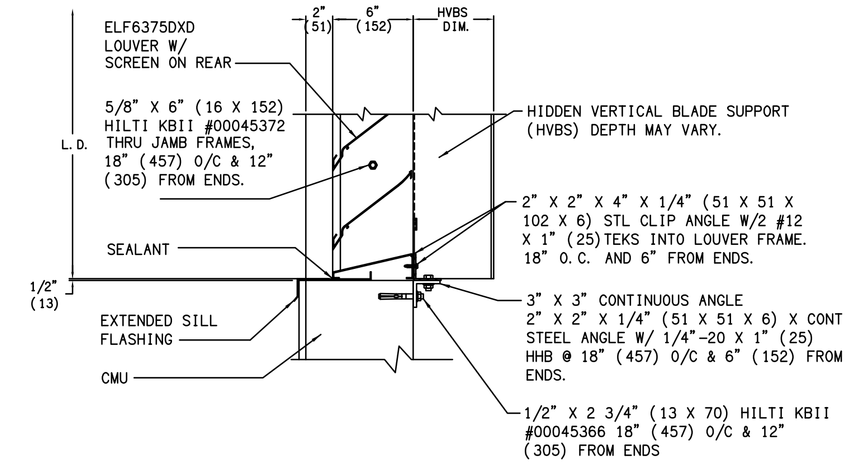

EHH-601DL SILL DETAIL

NOA# 08-229.06
FLORIDA PRODUCT APPROVED NO. FL10088.1

NOTE: THIS DETAIL APPLIES TO ALL EXTERIOR VENTS AND LOUVERS TO MEET WINDLOAD REQUIREMENTS, FBC 16.

3 LOUVER ANCHORING DETAIL - SILL

SCALE: NONE M-MASTER-MS_LOUVER-01C

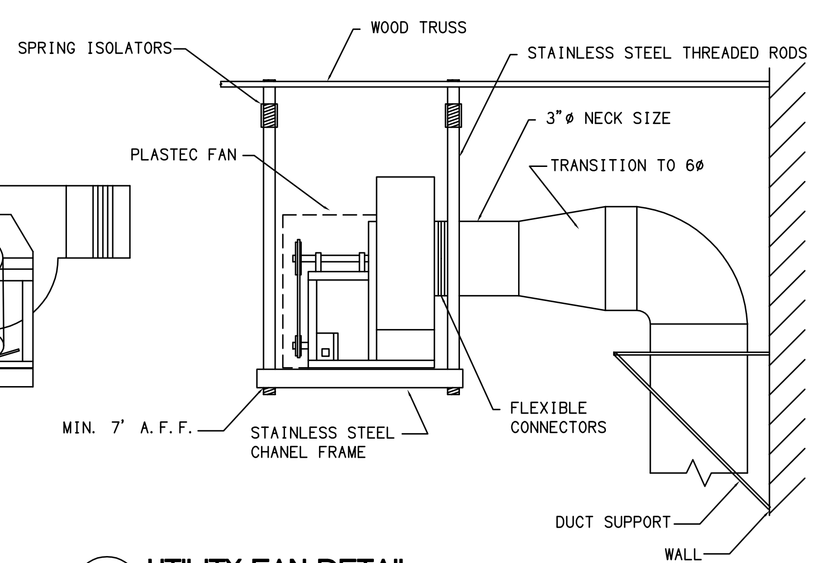

4 UTILITY FAN DETAIL

SCALE: NOT TO SCALE M-PV-05A

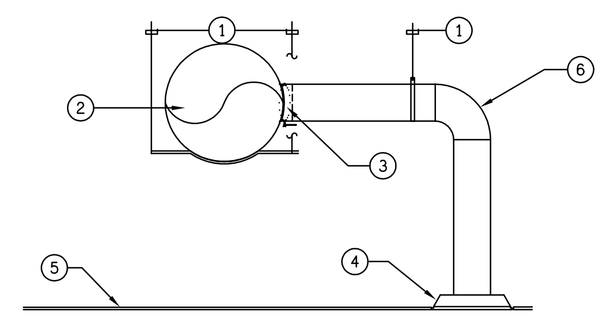

1	DUCT HANGERS TO BE SUPPORTED FROM STRUCTURE ABOVE. (SEE SPECIFICATIONS FOR METHODS AND MATERIALS.)
2	RETURN AIR DUCT (SEE SPECIFICATIONS FOR INSULATION AND DUCT TYPES) (SEE PLANS FOR SIZE)
3	SADDLE TAP MANUAL VOLUME DAMPER
4	REGURN AIR DIFFUSER (SEE AIR DISTRIBUTION SCHEUDLE AND PLANS FOR SIZE AND TYPE)
5	CEILING (SEE ARCHITECTURAL PLANS FOR LAYOUT AND TYPE)
6	RIGID ROUND DUCT (SEE PLANS FOR SIZE) (SEE SPECIFICATIONS FOR INSULATION AND DUCT TYPE)

5 RIGID EXHAUST DUCT DETAIL

SCALE: NOT TO SCALE M-DUCT-03A

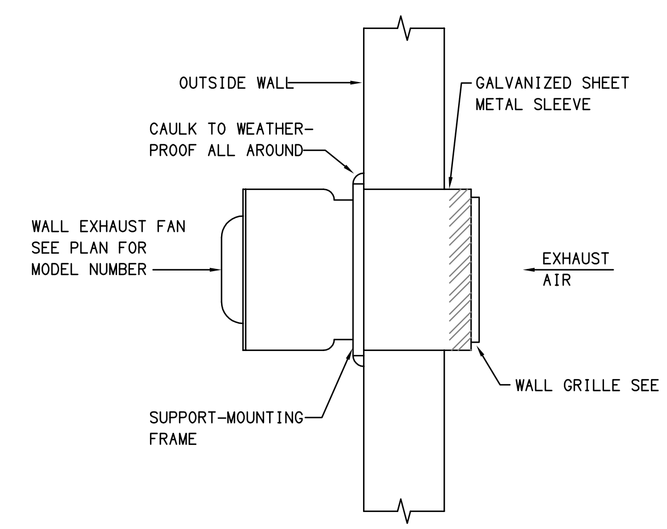

NOTE:
SUPPORT FAN TO PREVENT VIBRATION.

6 SIDEWALL EXHAUST FAN DETAIL

SCALE: NOT TO SCALE M-PV-03C

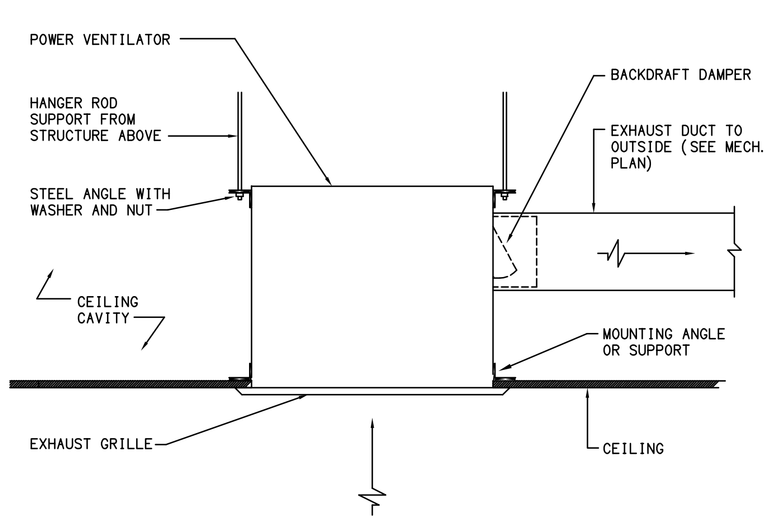

7 POWER VENTILATOR DETAIL (CEILING CABINET CONFIGURATION)

SCALE: NOT TO SCALE M-MASTER-PV-01D

CONSTRUCTION DOCUMENTS

MEP
GRAEF
1059 Maitland Center Commons Blvd., Suite 200
Maitland, FL 32751
407 / 659 0553
407 / 659 0609 fax
www.graef-usa.com
CERT # 4270

GRAEF PROJECT #2009-4110

CAD DWG FILE: PLOT-M501-104110.DWG

8/26/2010 4:37 PM

UGARTE & ASSOCIATES, INC.
ARCHITECTS PLANNERS
434 9th AVENUE WEST
PALMETTO, FLORIDA 34221
PHONE (941)729-5691
FAX (941)729-5692
AA-C001654

MECHANICAL DETAILS

MANATEE COUNTY - LINCOLN SPLASH PARK

501 17TH STREET EAST PALMETTO, FL 34221

REVISIONS:

PROJECT NO: 10-4110
DATE: 08.27.2010
DRAWN BY: CF
CHK'D BY: MR

Baltu Yorkos
LIC. NO. 60308

SHEET

M501