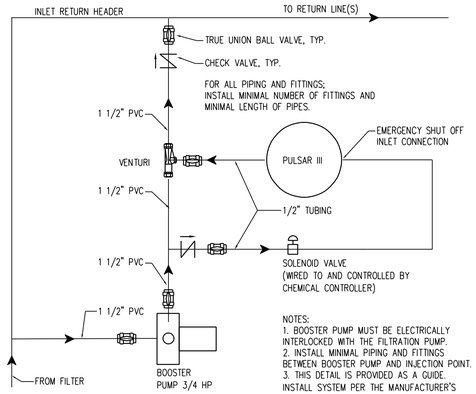

NOTES:
1. BOOSTER PUMP MUST BE ELECTRICALLY INTERLOCKED WITH THE FILTRATION PUMP.
2. INSTALL MINIMAL PIPING AND FITTINGS BETWEEN BOOSTER PUMP AND INJECTION POINT.
3. THIS DETAIL IS PROVIDED AS A GUIDE. INSTALL SYSTEM PER THE MANUFACTURER'S INSTALLATION RECOMMENDATIONS/INSTRUCTIONS.

PULSAR III INSTALLATION DETAIL — 6

NONE

SPRAY PAD (POOL A DATA)

SPRAY PAD PERIMETER	236	LINEAR FEET
SPRAY PAD SURFACE AREA	3,390	SQUARE FEET
STORAGE TANK VOLUME	5,273	GALLONS
TURNOVER RATE	20	MINUTES
CIRCULATION FLOW	264	GPM
FILTRATION RATE	12.5	G/SF
BASE BID WATER ACTIVITIES		
POPCORN JET (1)	30 GPM EA.	30 GPM
SLANT JETS (3)	5 GPM EA .	15 GPM
TALL TOOLIP SPRAY (1)	30 GPM EA.	30 GPM
TINY TOOLIP SPRAY (1)	14 GPM EA.	14 GPM
UPSTREAM JET (10)	10 GPM EA.	100 GPM
MINI FOAM GEYSER (3)	7 GPM EA.	21 GPM
SLANT FINGER JET (2)	11 GPM EA.	22 GPM
TOTAL ACTIVITY FLOW		232 GPM
ALTERNATE BID WATER ACTIVITIES		
TUMBLE BUCKETS (1)	92 GPM EA.	92 GPM
SLANT JETS (3)	5 GPM EA.	15 GPM
DEW DROP (1)	92 GPM EA.	92 GPM
WATER FUN CENTER (1)	20 GPM EA.	20 GPM
UPSTREAM JET (6)	10 GPM EA.	60 GPM
MINI FOAM GEYSER (4)	7 GPM EA.	28 GPM
T SERIES SHEET FLOW (2)	92 GPM EA.	184 GPM
BELLE SPRAY JET (3)	45 GPM EA.	135 GPM
TOTAL		626 GPM

MECHANICAL EQUIPMENT SCHEDULE

DETAIL	ID TAG	DESCRIPTION	QTY.	BASIS OF DESIGN
2,3 / PL4.00	A1A	FILTRATION PUMP	1	PENTAIR PUMP, EQ SERIES, EQK750, 264 GPM, @ 70' TDH, 7.5 HP, 208 VOLT, 3 PHASE, 60HZ, 3450 RPM, ODP MOTOR, END SUCTION, SELF PRIMING, CLOSE COUPLED, PROVIDE WITH INTEGRAL STRAINER AND EXTRA STRAINER BASKET.
3 / PL4.00	A2A	ACTIVITY PUMPS (ALTERNATE)	2	PENTAIR PUMP, EQ SERIES, EQK1000, 313 GPM, @ 45' TDH, 10.0 HP, 208 VOLT, 3 PHASE, 60HZ, 3450 RPM, ODP MOTOR, END SUCTION, SELF PRIMING, CLOSE COUPLED, PROVIDE WITH CUSTOM STAINLESS STEEL, NEPTUNE BENSON SELF PRIMING STRAINER AND BASKETS (1 EXTRA STRAINER BASKET FOR EACH PUMP STRAINER), MAXIMUM 1/8" OPENING STRAINER SCREENS REQUIRED. CONTRACTOR SHALL PROVIDE REQUIRED DIMENSIONAL INFORMATION TO STRAINER MANUFACTURER AS NECESSARY.
	A1C	FILTERS	3	PUREX TRITON, TRITON C SERIES, #TR-140, 36" DIAMETER FIBERGLASS TANK, 21.8 SQUARE FEET OF TOTAL SURFACE AREA (7.06 SF EACH), 12.5 GPM/S.F. OF FILTER AREA, PROVIDE WITH 2" HI-FLOW VALVE, MANUALLY BACKWASH ONE TANK AT A TIME @ 106 GPM MAXIMUM FLOW.
5 / PL4.01	A1G	CHEMICAL CONTROLLER	1	BECS, SYSTEM 3, CONTINUOUS MONITORING AND CONTROL, 2.0 TO 12.0 pH RANGE, 0.0 TO 20.0 ppm CHLORINE RANGE, 1 TO 1000 mV HRR (ORP) RANGE, PROVIDE WITH WS-RAK SAMPLE STREAM ASSEMBLY.
6 / PL4.00	A1J	PULSAR III	1	ARCH CHEMICALS, PULSAR III, 2.8 TO 48 LBS/DAY OUTPUT, USE CALCIUM HYPOCHLORITE FOR DISINFECTANT
7 / PL4.00	A1M	ACID FEED PUMP	1	STENNER, SERIES 45, #45M5, 2.5 TO 50 GALLONS PER DAY OUTPUT, 120 VOLTS, USE MURIATIC ACID FOR pH CONTROL. PROVIDE WITH WEIGHTED FOOT STRAINER.
	A1N	ACID STORAGE		15 GALLON CARBOYS PROVIDED BY OWNER'S CHEMICAL SUPPLIER
7 / PL4.01	A1S	FLOW METER	1	SIGNET 2551 MAG METER, INSERTION STYLE MAGNETIC FLOW SENSOR, MODEL #3-2551-P0-11. PROVIDE WITH FIELD MOUNT FLOW TRANSMITTER(MODEL #3-8550-1), AND UNIVERSAL MOUNTING KIT(MODEL #3-8050). PROVIDE WITH 4" DIAMETER PVC SADDLE INSERTION FITTING. FLOWMETER SHALL BE WALL MOUNTED. FLOW RANGE 0 – 500 GPM.
8 / PL4.01	AIF	AUTO FILL	1	CLA-VAL CO., #100-01A-XC, 1-1/2" PILOT VALVE, PROVIDE WITH CF1 FLOAT CONTROLLER AND REQUIRED FLOAT ROD LENGTH, FLOAT ROD TO BE OF PVC ROD STOCK ONLY. PROVIDE WITH FACTORY APPLIED FUSION BONDED EPOXY COATING TO VALVE BODY AND COVER.
9 / PL4.01	A2R	U.V. SYSTEM (ALTERNATE)	1	ETS, U.V. CHAMBER MODEL ECF-225-10 V (VALIDATED), 10" CONNECTIONS, 480V, 60 Hz, 3 PHASE, 5.0 KW, PROVIDE WITH CONTROL PANEL. TO INCLUDE ETS 208 V, 3 PHASE TO 480 VOLT, 3 PHASE STEP UP TRANSFORMER MODEL # BAUT4715E AND 120 V AUDIBLE ALARM PANEL TO MEET FLORIDA CODE REQUIREMENTS. UV SYSTEM TO BE INTERLOCKED TO ACTIVITY PUMP TO SHUT DOWN ACTIVITY PUMP WHEN UV DOSAGE FALLS BELOW REQUIRED DOSAGE. PROVIDE ONE EXTRA STRAINER SCREEN.
8 / PL4.02	A2J	ACTIVITY CHLORINE FEEDER (ALTERNATE)	1	PENTAIR, MODEL HC-3315, NSF LISTED, 15 POUND CAPACITY, 1.22 LBS/DAY OUTPUT. TO INCLUDE ALL CONNECTIONS FOR STANDARD INSTALLATION, USE SLOW DISOLVE CHLORINE TABLETS OR STICKS FOR DISINFECTANT, PROVIDE WITH EXTRA TABLET STRAINER,

MECHANICAL EQUIPMENT LIST — 4

NONE

OPERATIONS NOTE:
FILTER BACKWASHING TO OCCUR DURING UNOCCUPIED OFF PEAK HOURS ONLY.

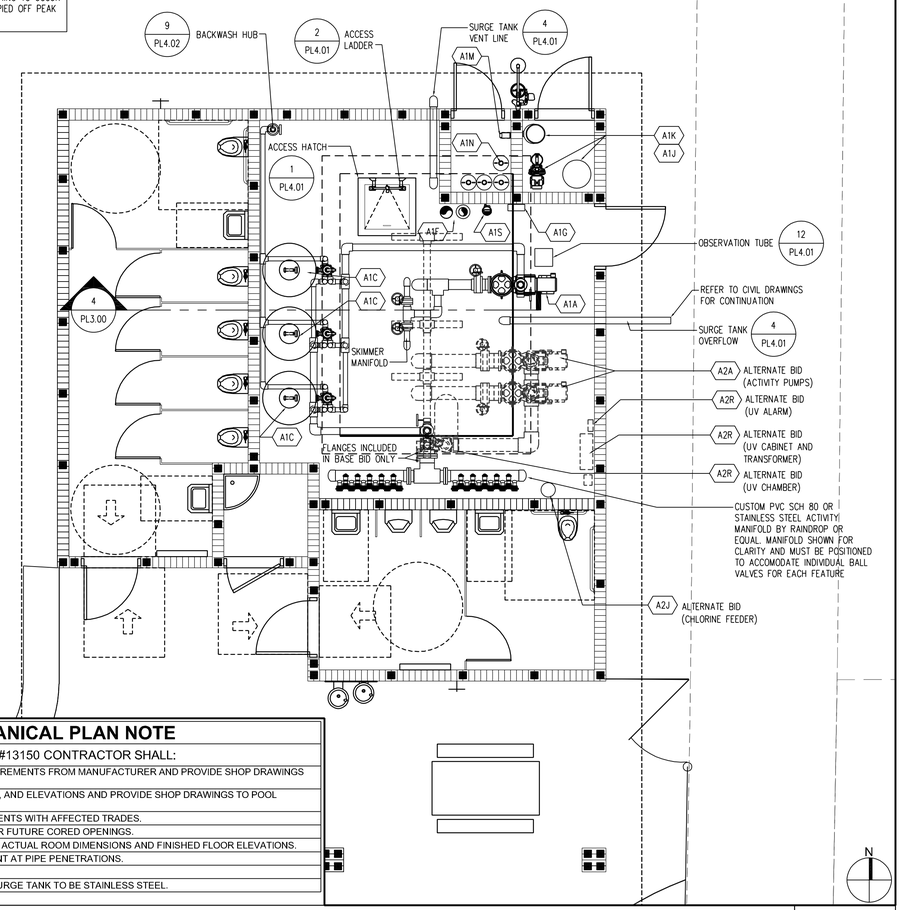

MECHANICAL PLAN NOTE

SECTION #13150 CONTRACTOR SHALL:

1. VERIFY EQUIPMENT PAD HEIGHT REQUIREMENTS FROM MANUFACTURER AND PROVIDE SHOP DRAWINGS TO POOL ENGINEER.
2. VERIFY ALL OPENINGS, PENETRATIONS, AND ELEVATIONS AND PROVIDE SHOP DRAWINGS TO POOL ENGINEER.
3. COORDINATE ALL PIPING AND EMBEDMENTS WITH AFFECTED TRADES.
4. REFER TO STRUCTURAL DRAWINGS FOR FUTURE CORED OPENINGS.
5. REFER TO ARCHITECTURAL PLANS FOR ACTUAL ROOM DIMENSIONS AND FINISHED FLOOR ELEVATIONS.
6. REFER TO 7/PL1.01 FOR REINFORCEMENT AT PIPE PENETRATIONS.
7. SUPPORT PIPES PER 1-7/PL4.02.
8. ALL CONNECTIONS AND HANGERS IN SURGE TANK TO BE STAINLESS STEEL.

MECHANICAL ROOM PLAN — 1

1/4" = 1'-0"

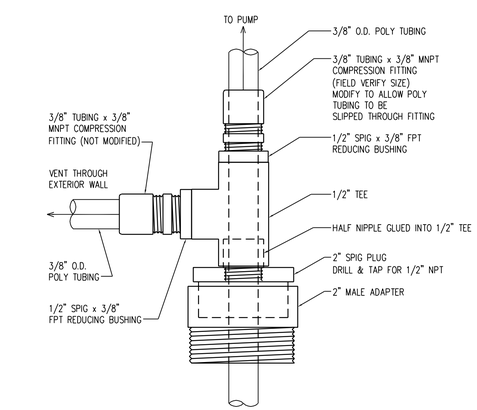

ACID SYSTEM ISOMETRIC DETAIL — 7

NONE

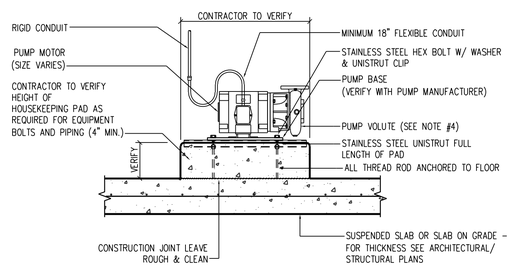

NOTES:
1. PAD SIZE SHALL BE MINIMUM INDICATED OR AS SHOWN ON THE PLANS OR AS INDICATED BY THE MANUFACTURER.
2. THE SIZE, NUMBER, TYPE, LOCATION, AND THREAD PROJECTION OF THE ALL THREAD ROD SHALL BE DETERMINED BY THE EQUIPMENT MANUFACTURER/INSTALLING CONTRACTOR, ALL THREAD ROD SHALL BE HELD IN POSITION WITH A TEMPLATE WHILE PAD IS BEING POURED.
3. EQUIPMENT BASES SHALL BE INSTALLED LEVEL UNLESS SPECIFIED OTHERWISE. EQUIPMENT BASES SHALL BE PROVIDED AND INSTALLED BY CONTRACTOR. SIZES AND LOCATIONS TO BE VERIFIED BY CONTRACTOR.
4. DO NOT ALLOW PUMP VOLUTE TO CARRY WEIGHT OF PIPING. PROVIDE SUPPORT FOR SUCTION/DISCHARGE PIPING TO ALLOW FOR PUMP REMOVAL.

TYPICAL PUMP PAD INSTALLATION — 5

NONE

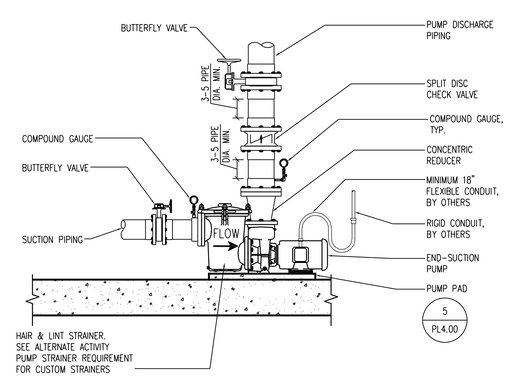

TYPICAL PUMP INSTALLATION — 3

NONE

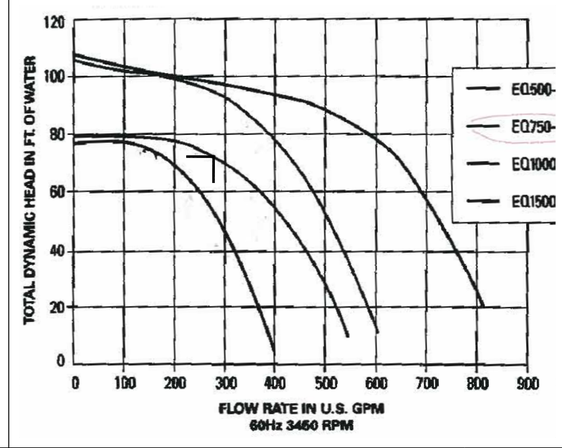

FILTRATION PUMP CURVE — 2

NONE

ACID DISTRIBUTION PIPING DETAIL — 8

NONE

UGARTE & ASSOCIATES, INC.
ARCHITECTS PLANNERS
434 9th AVENUE WEST
PALMETTO, FLORIDA 34221
PHONE (941)729-5691
FAX (941)729-5692
AA-C001654

WTI WATER TECHNOLOGY INC

MANATEE COUNTY – LINCOLN SPLASH PARK

OVERALL MECHANICAL LAYOUT

REVISIONS:

PHASE: REVIEW
PROJECT NO: 2009-46
DATE: 08.16.2010
DRAWN BY: AMJ
CHK'D BY: SAL

BRIAN FREBER, P.E.
LIC. NO. 60424

© UGARTE & ASSOCIATES, INC. 2010

8/12/2010 11:17 AM Andrea Jackson CAD DWG FILE: 00489 PL400.DWG

SHEET
PL4.00