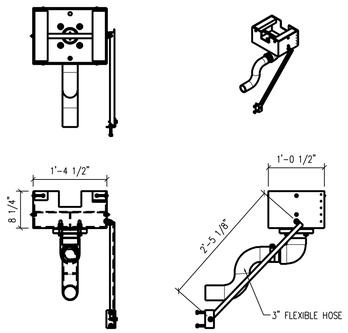

FLOATING SKIMMER — 10

NONE

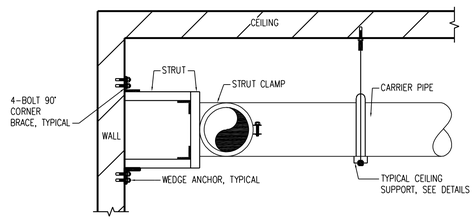

DETAILS ARE TYPICAL THRUST BRACING METHODS, AND NOT INCLUSIVE OF ALL SITE CONDITIONS. CONTRACTOR TO PROVIDE SHOP DRAWINGS OF BRACING METHODS FOR APPROVAL.

TYPICAL THRUST BRACING DETAIL — 7

NONE

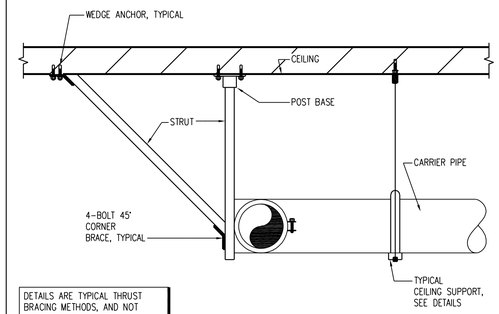

DETAILS ARE TYPICAL THRUST BRACING METHODS, AND NOT INCLUSIVE OF ALL SITE CONDITIONS. CONTRACTOR TO PROVIDE SHOP DRAWINGS OF BRACING METHODS FOR APPROVAL.

TYPICAL THRUST BRACING DETAIL — 4

NONE

MAXIMUM ALLOWABLE SUPPORT SPACING
(IN FEET)

NOM PIPE SIZE (IN)	PVC PIPE									
	SCHEDULE 40					SCHEDULE 80				
	TEMP °F					TEMP °F				
	60	80	100	120	140	60	80	100	120	140
1/2	4 1/2	4 1/2	4	2 1/2	2 1/2	5	4 1/2	4 1/2	3	2 1/2
3/4	5	4 1/2	4	2 1/2	2 1/2	5 1/2	5	4	3	2 1/2
1	5 1/2	5	4 1/2	3	2 1/2	6	5 1/2	5	3 1/2	3
1 1/4	5 1/2	5 1/2	5	3	3	6	6	5 1/2	3 1/2	3
1 1/2	6	5 1/2	5	3 1/2	3	6 1/2	6	5 1/2	3 1/2	3 1/2
2	6	5 1/2	5	3 1/2	7	7	6 1/2	6	4	3 1/2
2 1/2	7	6 1/2	6	4	3 1/2	7 1/2	7 1/2	6 1/2	4 1/2	4
3	7	7	6	4	3-1/2	8	7 1/2	7	4 1/2	4
4	7 1/2	7	6 1/2	4 1/2	4	9	8	7 1/2	5	4 1/2
6	8 1/2	8	7 1/2	5	4 1/2	10	9 1/2	9	6	5
8	9	8 1/2	8	5	4 1/2	11	10 1/2	9 1/2	6 1/2	5 1/2
10	10	9	8 1/2	5 1/2	5	12	11	10	7	6
12	11 1/2	10 1/2	9 1/2	6 1/2	5 1/2	12	11	10	7	6

POOL PIPE SUPPORT NOTE — 1

NONE

THIS SPACE NOT USED — 11

NONE

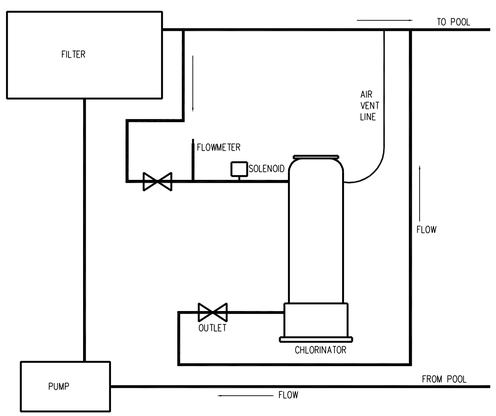

ACTIVITY CHLORINE FEEDER SYSTEM SCHEMATIC — 8

NONE

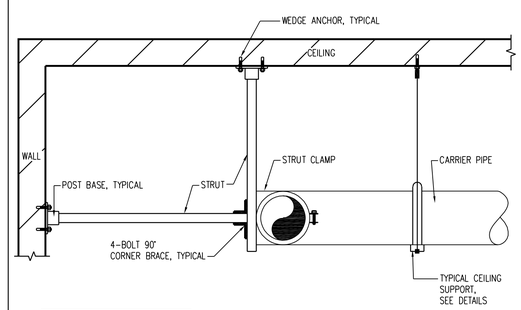

DETAILS ARE TYPICAL THRUST BRACING METHODS, AND NOT INCLUSIVE OF ALL SITE CONDITIONS. CONTRACTOR TO PROVIDE SHOP DRAWINGS OF BRACING METHODS FOR APPROVAL.

TYPICAL THRUST BRACING DETAIL — 5

NONE

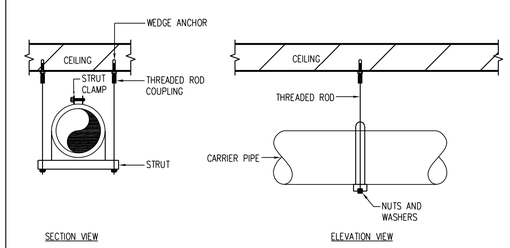

NOTES:
1) DETAILS ARE TYPICAL SUPPORT METHODS AND NOT INCLUSIVE OF ALL SITE CONDITIONS.
2) ALL PIPING SHALL BE RIGIDLY SUPPORTED LATERALLY AND VERTICALLY. SUPPORT SYSTEM SHALL PROVIDE ZERO MOVEMENT IN PIPING DURING ALL OPERATING CONDITIONS.
3) PROVIDE THRUST RESTRAINT AT ALL HORIZONTAL/HORIZONTAL, HORIZONTAL/VERTICAL, AND VERTICAL/HORIZONTAL CHANGES IN DIRECTION.
4) SEE SECTION 13150 SPECIFICATIONS FOR ADDITIONAL SUPPORT REQUIREMENTS AND MATERIALS
5) SEE PIPE SUPPORT TABLE ON DRAWINGS.

TYPICAL PIPE SUPPORT DETAILS — 2

NONE

THIS SPACE NOT USED — 12

NONE

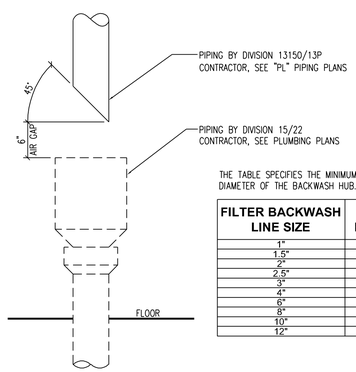

THE TABLE SPECIFIES THE MINIMUM RECOMMENDED DIAMETER OF THE BACKWASH HUB.

FILTER BACKWASH LINE SIZE	RECOMMENDED BACKWASH HUB SIZE
1"	4"
1.5"	4"
2"	6"
2.5"	6"
3"	8"
4"	10"
6"	12"
8"	16"
10"	20"
12"	24"

TYPICAL AIR GAP - HUB — 9

NONE

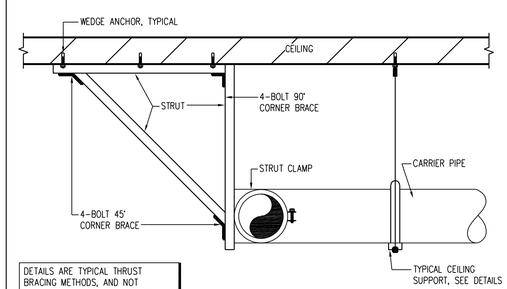

DETAILS ARE TYPICAL THRUST BRACING METHODS, AND NOT INCLUSIVE OF ALL SITE CONDITIONS. CONTRACTOR TO PROVIDE SHOP DRAWINGS OF BRACING METHODS FOR APPROVAL.

TYPICAL THRUST BRACING DETAIL — 6

NONE

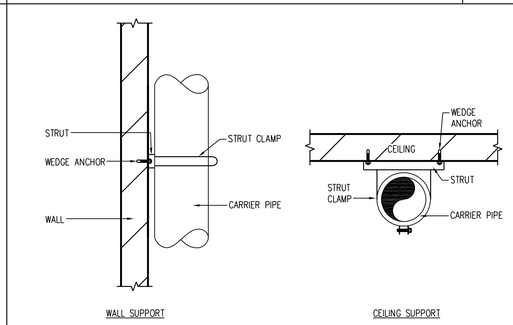

NOTES:
1) DETAILS ARE TYPICAL SUPPORT METHODS AND NOT INCLUSIVE OF ALL SITE CONDITIONS.
2) ALL PIPING SHALL BE RIGIDLY SUPPORTED LATERALLY AND VERTICALLY. SUPPORT SYSTEM SHALL PROVIDE NO MOVEMENT IN PIPING DURING ALL OPERATING CONDITIONS.
3) PROVIDE THRUST RESTRAINT AT ALL HORIZONTAL/HORIZONTAL, HORIZONTAL/VERTICAL, AND VERTICAL/HORIZONTAL CHANGES IN DIRECTION.
4) SEE SECTION 13150 SPECIFICATIONS FOR ADDITIONAL SUPPORT REQUIREMENTS AND MATERIALS
5) SEE PIPE SUPPORT TABLE ON DRAWINGS.

TYPICAL PIPE SUPPORT DETAILS — 3

NONE

UGARTE & ASSOCIATES, INC.
ARCHITECTS PLANNERS
434 9th AVENUE WEST
PALMETTO, FLORIDA 34221
PHONE (941)729-5691
FAX (941)729-5692
AA-C001654

WTI
WATER TECHNOLOGY INC

MECHANICAL DETAILS

MANATEE COUNTY - LINCOLN SPLASH PARK

REVISIONS:

PHASE: REVIEW
PROJECT NO: 2009-46
DATE: 08.16.2010
DRAWN BY: AMJ
CHK'D BY: SAL

© UGARTE & ASSOCIATES, INC. 2010

BRIAN FREBER, P.E.
LIC. NO. 60424

SHEET
PL4.02

8/12/2010 11:16 AM Andrea Jackson CAD DWG FILE: 00489 PL402.DWG