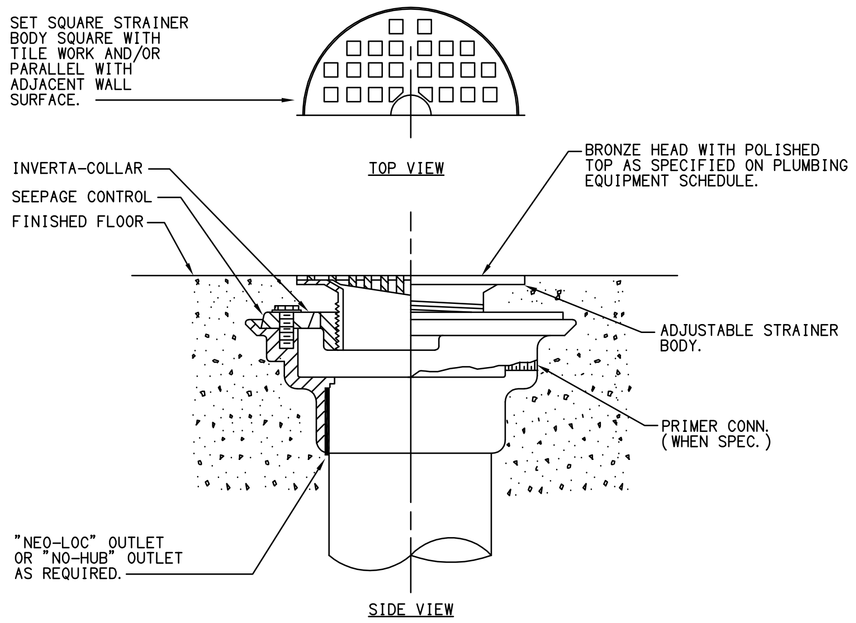

1 FLOOR DRAIN "A" DETAIL (FD-1 + FD-2)

SCALE: NOT TO SCALE P-DRAIN-01A

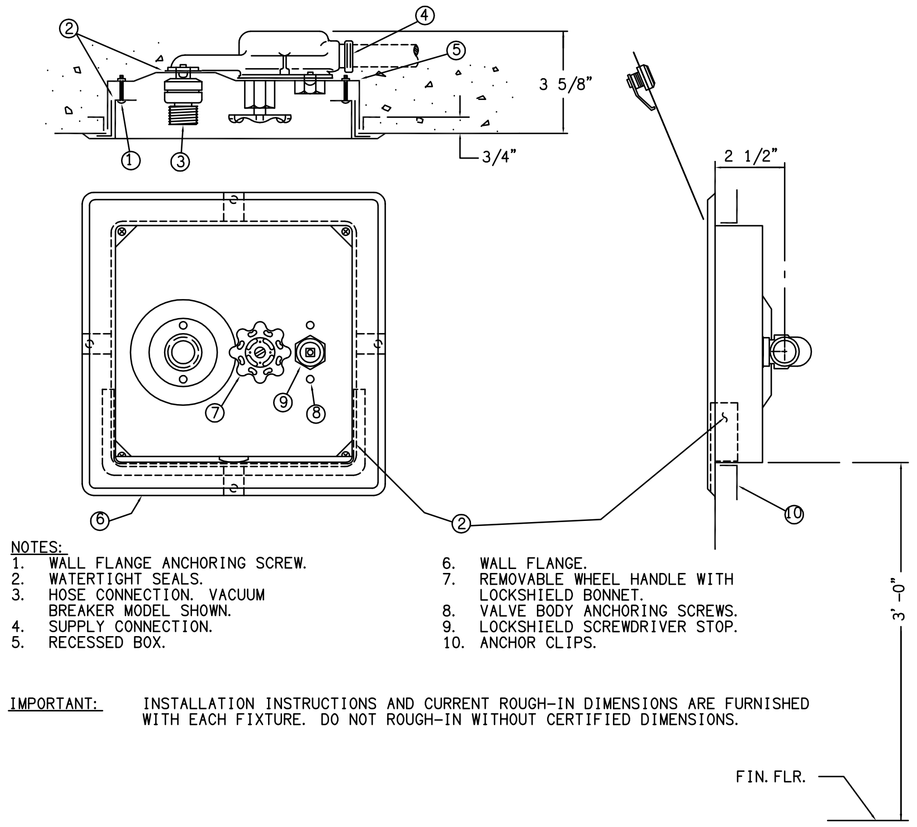

NOTES:
1. WALL FLANGE ANCHORING SCREW.
2. WATERTIGHT SEALS.
3. HOSE CONNECTION. VACUUM BREAKER MODEL SHOWN.
4. SUPPLY CONNECTION.
5. RECESSED BOX.
6. WALL FLANGE.
7. REMOVABLE WHEEL HANDLE WITH LOCKSHIELD BONNET.
8. VALVE BODY ANCHORING SCREWS.
9. LOCKSHIELD SCREWDRIVER STOP.
10. ANCHOR CLIPS.

IMPORTANT: INSTALLATION INSTRUCTIONS AND CURRENT ROUGH-IN DIMENSIONS ARE FURNISHED WITH EACH FIXTURE. DO NOT ROUGH-IN WITHOUT CERTIFIED DIMENSIONS.

2 WALL HYDRANT DETAIL

SCALE: NOT TO SCALE

BASIS OF DESIGN:

ZURN Z1400-2A-HD	ZURN ZAB-1470A	• ZURN ZN1400-2-NL	ZURN ZABN-1468

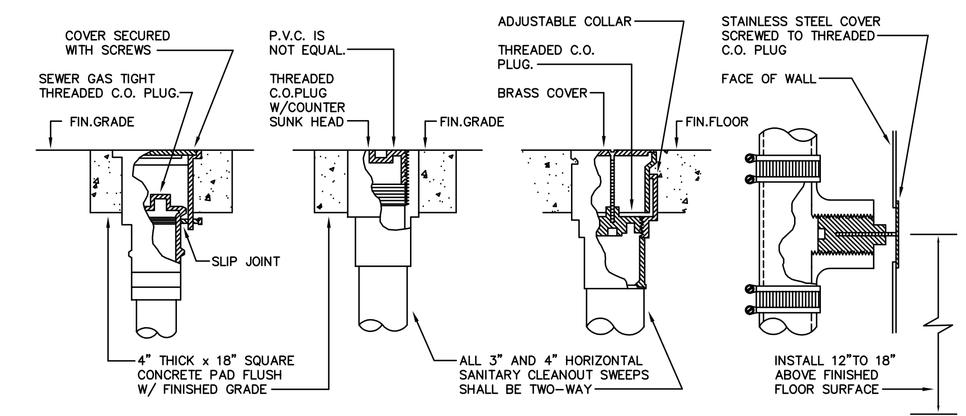

EXTERIOR-TYPE 2 PAVEMENT AREAS | EXTERIOR-TYPE 1 GRASS AREAS | FLOOR | WALL

NOTES:
1. P. V. C. /C. I. CLEAN-OUT PLUGS ARE NOT APPROVED.
2. CONTRACTOR SHALL PROVIDE CARPET MARKERS WHEN ARCHITECTURAL FINISH SCHEDULE CALLS FOR CARPETED SURFACES.

3 TYPICAL CLEAN-OUT DETAILS

SCALE: NOT TO SCALE

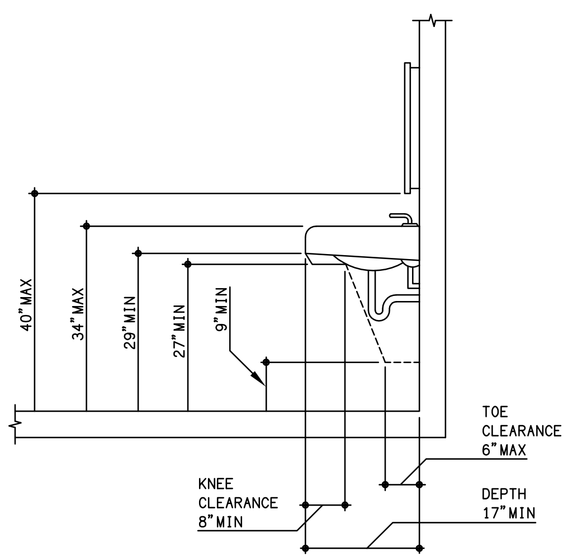

4 ADA LAVATORY CLEARANCES

SCALE: NOT TO SCALE

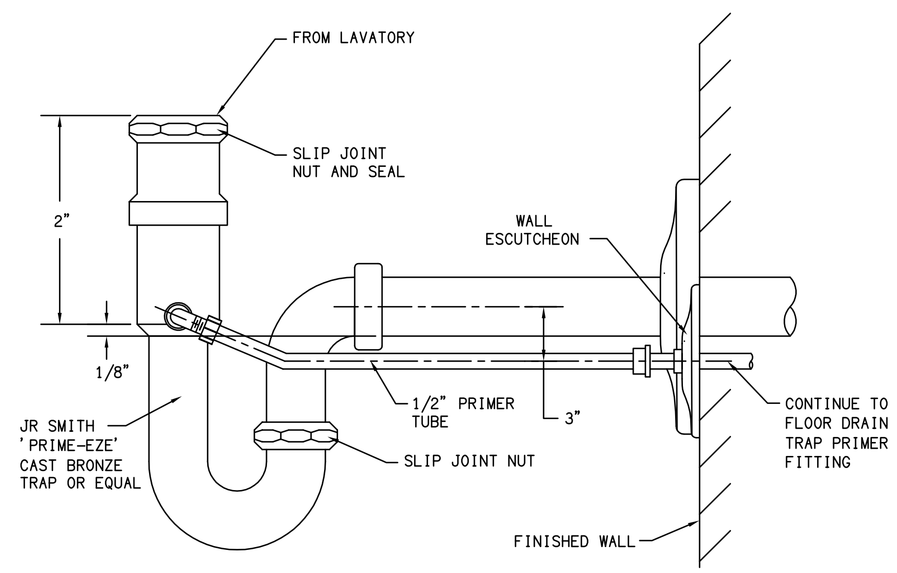

5 P-TRAP TRAP PRIMER DETAIL

SCALE: NOT TO SCALE

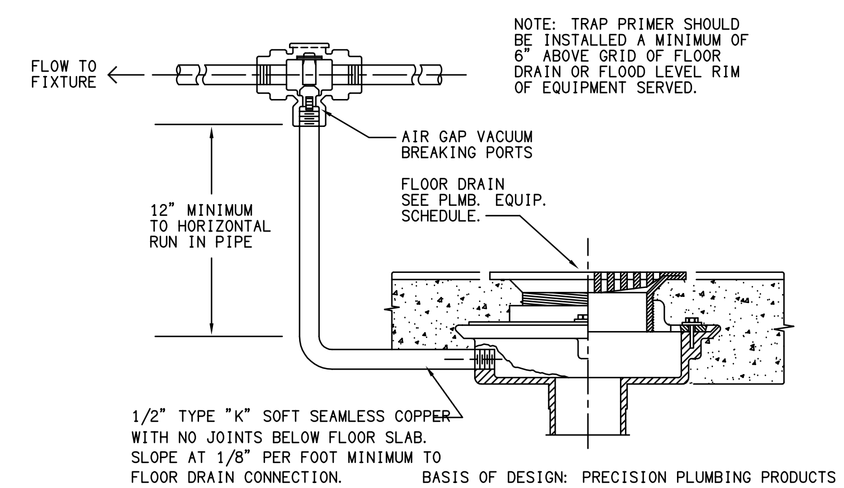

BASIS OF DESIGN: PRECISION PLUMBING PRODUCTS

6 TRAP PRIMER DETAIL

SCALE: NOT TO SCALE P-TRAP_PRIMER-01A

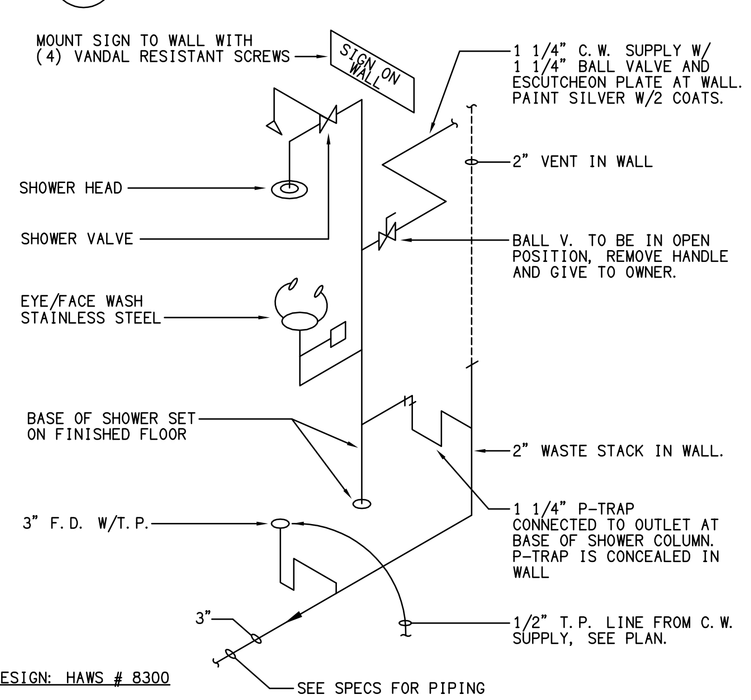

BASIS OF DESIGN: HAWS # 8300

7 EMERGENCY SHOWER EYE/FACE WASH DETAIL

SCALE: NOT TO SCALE P-LABORATORY-01C

CONSTRUCTION DOCUMENTS

MEP GRAEF
1059 Maitland Center Commons Blvd., Suite 200
Maitland, FL 32751
407 / 659 0553
407 / 659 0609 fax
www.graef-usa.com
CERT # 4270

GRAEF PROJECT #2009-4110

CAD DWG FILE: PLOT-P003-104110.DWG

8/26/2010 4:37 PM

UGARTE & ASSOCIATES, INC.
ARCHITECTS PLANNERS
434 9th AVENUE WEST
PALMETTO, FLORIDA 34221
PHONE (941)729-5691
FAX (941)729-5692
AA-C001654

PLUMBING DETAILS

MANATEE COUNTY – LINCOLN SPLASH PARK

501 17TH STREET EAST PALMETTO, FL 34221

REVISIONS:

PROJECT NO: 10-4110
DATE: 08.27.2010
DRAWN BY: CF
CHK'D BY: MR

Baltu Yorkos
LIC. NO. 60308

SHEET

P003