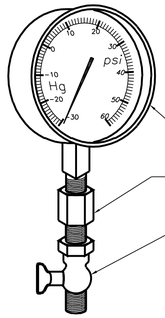

PRESSURE GAUGES SHALL BE INSTALLED BY MEANS OF DRILLING AND TAPPING PIPE TO BE MONITORED. THE GAUGE SHALL THEN BE THREADED INTO THE PIPE. PROVIDE WITH SNUBBER AND PET COCK.

GAUGE MAY BE USED WHEREVER CRUCIAL VACUUM OR PRESSURE READINGS ARE ESSENTIAL.

4 1/2" STAINLESS STEEL CASED LIQUID FILLED PRESSURE GAUGES

SHALL HAVE A DIAL RANGE PRESSURE OF 60psi AND VACUUM RANGE OF 30" Hg THE MINOR GRADUATIONS SHALL HAVE A PRESSURE OF 2psi AND VACUUM OF 2"Hg, 1/4" NPT AS MANUFACTURED BY WEKSLER, MARSH, WINTERS OR APPROVED EQUAL.

COMPOUND GAUGE DETAIL — 10

NONE

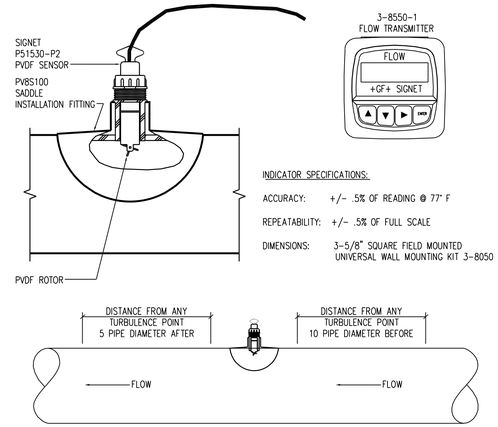

SIGNET FLOWMETER DETAIL — 7

NONE

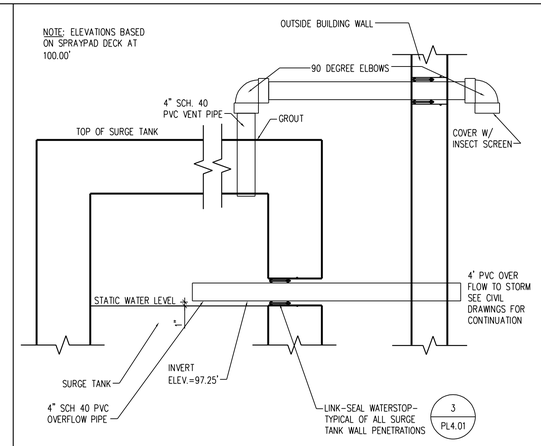

SURGE TANK AIR VENT AND OVERFLOW DETAIL — 4

NONE

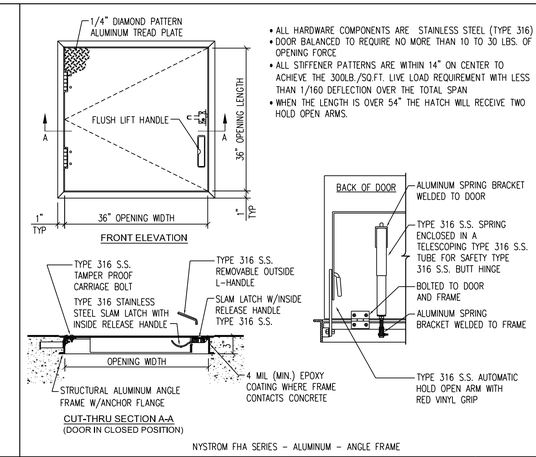

- ALL HARDWARE COMPONENTS ARE STAINLESS STEEL (TYPE 316)
- DOOR BALANCED TO REQUIRE NO MORE THAN 10 TO 30 LBS. OF OPENING FORCE
- ALL STIFFENER PATTERNS ARE WITHIN 14" ON CENTER TO ACHIEVE THE 300LB./SQ.FT. LIVE LOAD REQUIREMENT WITH LESS THAN 1/160 DEFLECTION OVER THE TOTAL SPAN
- WHEN THE LENGTH IS OVER 54" THE HATCH WILL RECEIVE TWO HOLD OPEN ARMS.

36" X 36" ACCESS HATCH DETAIL — 1

PROVIDED BY SECTION 13150 CONTRACTOR

NONE

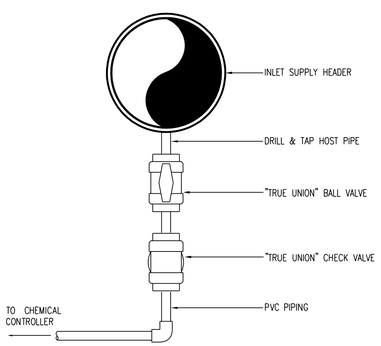

SAMPLE STREAM DETAIL — 11

NONE

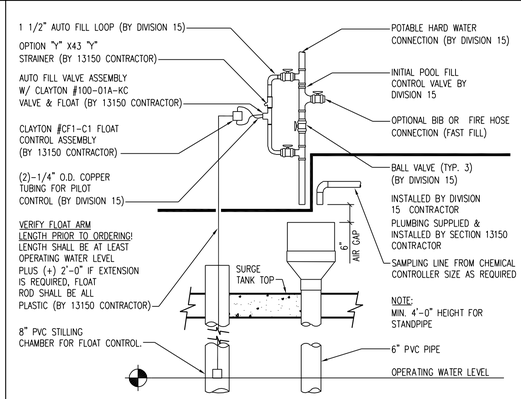

NOTE:
AUTO FILL VALVE ASSEMBLY AND FLOAT CONTROL COMPONENTS SUPPLIED BY SECTION 13150 CONTRACTOR.
AUTO FILL VALVE ASSEMBLY AND COPPER PIPING SHALL BE INSTALLED BY A LICENSED PLUMBER!
TERMINATE STILLING CHAMBERS 12" OFF SURGE TANK FLOOR.

CLA-VALVE AUTO-FILL DETAIL — 8

NONE

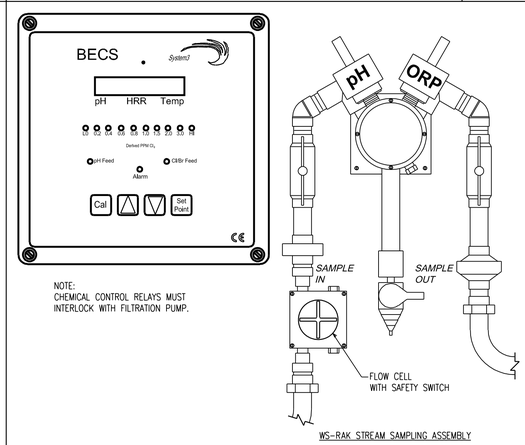

NOTE:
CHEMICAL CONTROL RELAYS MUST INTERLOCK WITH FILTRATION PUMP.

CHEMICAL CONTROLLER DETAIL — 5

NONE

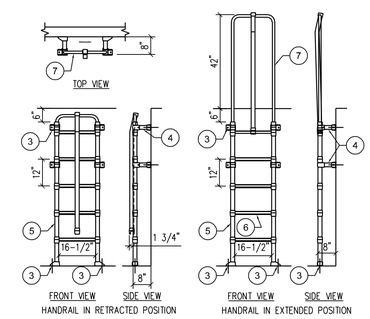

KEYED NOTES:
1. LADDERS WITH PULL-UP HANDRAIL, AVAILABLE IN 5 RUNG THROUGH 25 RUNG.
2. POLYPROPYLENE CONFORMS TO ASTM D-4101. LADDERS MEET ALL ASTM C-497 LOAD REQUIREMENTS AND OSHA 1910.26 AND 1910.27 SPECIFICATIONS.
3. FASTEN LADDER TO FLOOR AND WALL WITH 316L STAINLESS STEEL 1/2"X 3-3/4" ANCHORS. ANCHORS TO BE INSTALLED PER MANUFACTURERS INSTRUCTIONS.
4. STANDARD ADJUSTABLE MOUNTING BRACKET - 8" O.D.
5. ALUMINUM REINFORCED COPOLYMER POLYPROPYLENE RAIL 1-3/4" X 1-3/4" DIA.
6. STEEL REINFORCED COPOLYMER POLYPROPYLENE RUNG 1-5/8" X 1-1/4" DIA. WITH MOLDED FINGER GRIPS, 12" C.C.
7. ALUMINUM AND STEEL REINFORCED COPOLYMER POLYPROPYLENE PULL-UP HANDRAIL.
   LADDER MANUFACTURED BY LANE INTERNATIONAL CORPORATION, P.O. BOX 925, TUALATIN, OREGON 800-666-0076

SURGE TANK LADDER WITH PULL UP HANDRAIL — 2

NONE

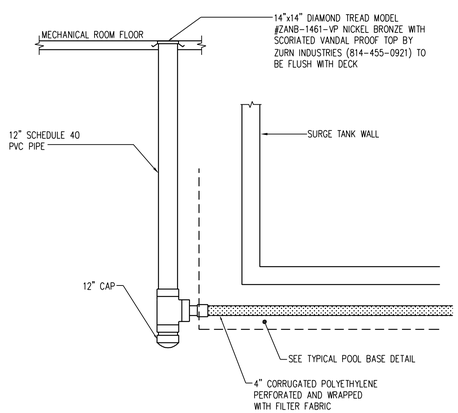

OBSERVATION WELL DETAIL — 12

NONE

NOTES:
1. SEE EQUIPMENT LIST FOR UV UNIT FLANGE CONNECTION SIZE.
2. ALL PIPING & FITTINGS TO & FROM UV UNIT SHALL BE SCHEDULE 80 PVC
3. SEE PIPING ISOMETRIC DETAILS FOR PIPE DIAMETER REQUIREMENTS
4. ALL PIPE REDUCTIONS SHALL BE WITH A CONCENTRIC REDUCER AS SHOWN. NO BUSHINGS ALLOWED.
5. COORDINATE INSTALLATION WITH ELECTRICAL CONTRACTOR. CONTROL BOX SHALL BE INSTALLED WITHIN 10 FEET OF UNIT.
6. PROVIDE CLEARANCE AS REQUIRED ADJACENT TO UV UNIT FOR REMOVAL & REPLACEMENT OF UV LAMPS
7. BRACE PIPING PER PIPE SUPPORT DETAILS.
8. INTERLOCK UV TO SHUT DOWN ACTIVITY PUMPS WHEN UV DOSAGE FALLS BELOW REQUIRED LIMITS PER FLORIDA POOL CODE.
9. PROVIDE AUDIBLE ALARM PER FLORIDA POOL CODE.

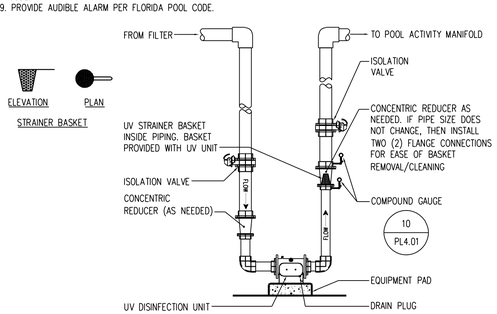

ECF UV DISINFECTION UNIT INSTALLATION DETAIL — 9

NONE

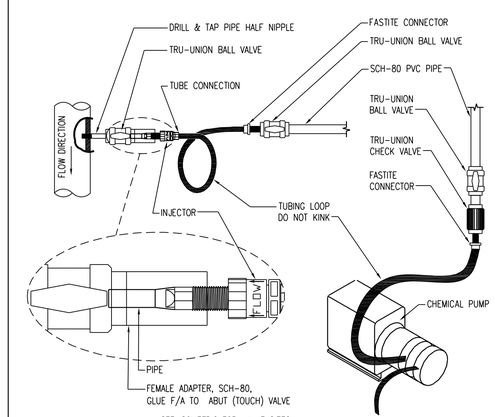

NOTE: FOR PIPING USE FASTITE CONNECTOR OR SIMILAR COMPRESSION FITTING.

ACID INJECTION DETAIL — 6

NONE

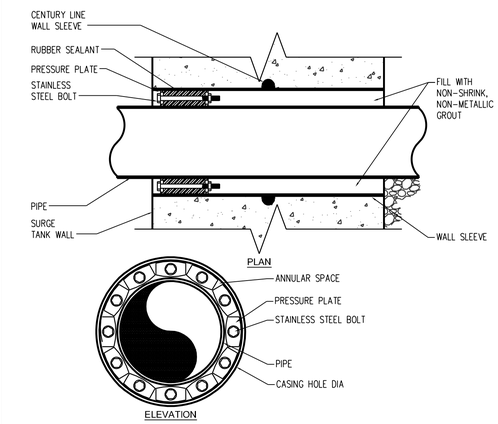

WALL SLEEVE / LINK SEAL DETAIL — 3

PROVIDED & INSTALLED BY 13150 CONTRACTOR.

NONE

UGARTE & ASSOCIATES, INC.
ARCHITECTS PLANNERS
434 9th AVENUE WEST
PALMETTO, FLORIDA 34221
PHONE (941)729-5691
FAX (941)729-5692
AA-C001654

WTI
WATER TECHNOLOGY INC

MECHANICAL DETAILS

MANATEE COUNTY - LINCOLN SPLASH PARK

REVISIONS:

PHASE: REVIEW
PROJECT NO: 2009-46
DATE: 08.16.2010
DRAWN BY: AMJ
CHK'D BY: SAL

BRIAN FREBER, P.E.
LIC. NO. 60424

SHEET
PL4.01

© UGARTE & ASSOCIATES, INC. 2010

8/12/2010 11:17 AM Andrea Jackson- CAD DWG FILE: 00489 PL401.DWG