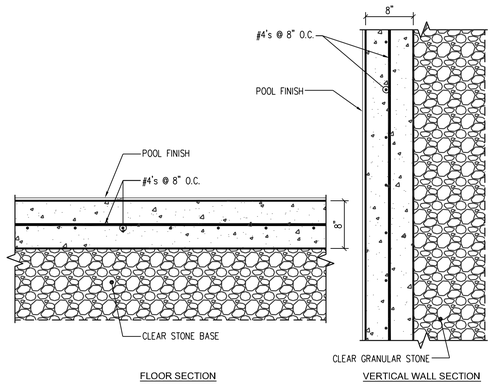

TYPICAL 8" REINFORCEMENT — 9

NONE

STRUCTURAL NOTES:

1. UNLESS OTHERWISE INDICATED, CONCRETE WALLS AND SLABS SHALL BE REINFORCED AS FOLLOWS: NO. 4'S @ 8" EACH WAY CENTER OF 8" SECTIONS; NO. 4'S @ 12" EACH WAY, EACH FACE OF 12" SECTIONS. SINGLE MAT REINFORCEMENT SHALL BE AT CENTER OF SECTION, UNLESS OTHERWISE INDICATED.
2. MINIMUM CLEARANCE FOR REINFORCEMENT BARS, UNLESS OTHERWISE INDICATED, SHALL BE 3" WHEN PLACED ON GROUND; FOR SURFACES EXPOSED TO WATER, EARTH OR WEATHER– 1 1/2" CLEARANCE FOR NO. 5 BARS OR SMALLER AND 2" CLEARANCE FOR LARGER THAN NO. 5'S; INTERIOR SLABS– 3/4" CLEARANCE, INTERIOR BEAMS 1 1/2" CLEARANCE. 2" AROUND ALL PIPES, LIGHT NICHES, AND OTHER EMBEDDED ITEMS.
3. REFER TO WALL CORNER AND WALL INTERSECTION REINFORCING DETAIL IN GENERAL, THE WALL CORNER REINFORCING SIZE'S AND SPACINGS SHALL BE CALLED OUT ON THE PLANS AND REFERENCED TO THESE DETAILS AND THE TYPICAL HORIZONTAL WALL REINFORCING SHALL LAP WITH CORNER AND INTERSECTION REINFORCING.
4. UNLESS OTHERWISE INDICATED, ALL WALL REINFORCEMENT BARS SHALL BE CONTINUOUS AROUND CORNERS. REINFORCEMENT SHALL BE EXTENDED INTO CONNECTING WALLS. UNLESS OTHERWISE INDICATED, CONTRACTOR MAY SPLICE CONTINUOUS SLAB BARS AT LOCATIONS OF THERE CHOOSING, EXCEPT THAT TOP BAR SPLICES SHALL BE LOCATED AT MIDSPAN AND BOTTOM BAR SPLICES SHALL BE LOCATED AT SUPPORTS. ALL REINFORCEMENT BENDS AND LAPS, UNLESS OTHERWISE INDICATED, SHALL SATISFY THE FOLLOWING MINIMUM REQUIREMENTS SHOWN BELOW.
5. DETAILS OF STRUCTURAL REINFORCEMENT INDICATED FOR A MINIMUM SOIL BEARING PRESSURE OF 2000 PSF.
6. SUBGRADE SUPPORTING THE SLAB SHALL BE COMPACTED TO 95% MODIFIED PROCTOR.

REINFORCEMENT LAP LENGTHS - DESIGN STRENGTH: CONCRETE 4000 PSI / SHOTCRETE 5000 PSI									
BAR SIZE	#3	#4	#5	#6	#7	#8	#9	#10	#11
GR-60 TOP BAR	1'–7"	2'–1"	2'–7"	3'–1"	4'–6"	5'–2"	5'–10"	6'–7"	7'–3"
GR-60 OTHER BAR	1'–3"	1'–7"	2'–0"	2'–5"	3'–6"	4'–0"	4'–6"	5'–1"	5'–7"
STANDARD HOOK DIMENSION									
BAR SIZE	#3	#4	#5	#6	#7	#8	#9	#10	#11
HOOK LENGTH	0'–7"	0'–9"	1'–0"	1'–2"	1'–4"	1'–6"	1'–11"	2'–2"	2'–5"

STRUCTURAL REINFORCEMENT NOTE — 6

NONE

FINISH SCHEDULE

AREA		POOL A	NOTES
HORIZONTAL SURFACES	FINISH	LB	
	COLOR	N/A	
JOINT ACCENT / DRAIN GRATE TRIM	FINISH	N/A	
	COLOR	N/A	
DECK	FINISH	N/A	SEE ARCHITECTURAL DWGS.
	COLOR	N/A	SEE ARCHITECTURAL DWGS.

NOTE:
1. FINISH PER SCHEDULE UNLESS OTHERWISE INDICATED.
2. ALL HORIZONTAL SURFACES SHALL BE SLIP RESISTANT.

FINISH & COLOR CODES

ID	FINISHES		ID	COLORS
QA	QUARTZ AGGREGATE		C01	AS SELECTED BY ARCHITECT
MP	MARCITE PLASTER		C02	MATCH TO POOL FINISH
PT	PAINT		C03	BLACK ON WHITE
C7	1"x2" KEYSTONE C-701 TILE		C04	BLACK AND RED ON WHITE
KT1	1"x1" KEYSTONE TILE		C05	GALAXY BLUE
KT2	2"x2" KEYSTONE TILE		C06	LIGHT COLOR
CT1	6"x6" CERAMIC TILE		C07	CONTRASTING TO POOL FINISH
SR1	1"x1" SLIP RESISTANT TILE			
SR2	2"x2" SLIP RESISTANT TILE			
AC	ACRYLIC			
LB	LIGHT BROOM SLIP RESISTANT			

POOL FINISH SCHEDULE — 3

NONE

ANNOTATION SYMBOLS

DETAIL	BLOCK	DESCRIPTION
	DETAIL / SHEET	DETAIL BUBBLE
		SECTION MARK
	ELEVATION REFERENCE	ELEVATION MARKER
	N	NORTH ARROW
2 / PL3.00	TAG	DRAIN
SEE PIPE SCHEDULE	TAG	PIPE
SEE EQUIPMENT SCHEDULE	TAG	MECHANICAL EQUIPMENT
SEE VALVE SCHEDULE	TAG	VALVE IDENTIFICATION
		NORMAL OPERATION FLOW
	YN XE 0,0	DIMENSION ORIGIN
SEE DIMENSION SCHEDULE	100	DIMENSION POINT
	DIMENSION	DIMENSION – LINEAR
		DIMENSION – RADIUS
	TAG	REVISION

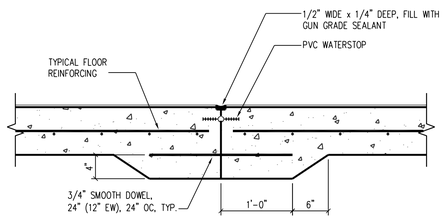

NOTE:
1. WALL JOINT SHALL BE ALIGNED WITH FLOOR JOINT
2. SEE FINISH SCHEDULE FOR TILE AND POOL FINISH

TYPICAL CONTROL JOINT - FLOOR — 10

NONE

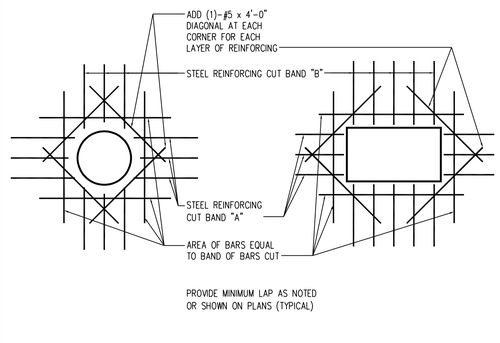

NOTES:
1. TYPICAL FOR ALL OPENINGS IN CONCRETE WALLS AND SLABS INCLUDING DRAINS UNLESS INDICATED OTHERWISE ON PLANS
2. DO NOT WELD REINFORCEMENT TO PIPE SLEEVES AND INSERTS
3. ALL OPENINGS THROUGH WATERTIGHT TANK REQUIRE WATERSTOPS

REINFORCEMENT AT OPENINGS DETAIL — 7

NONE

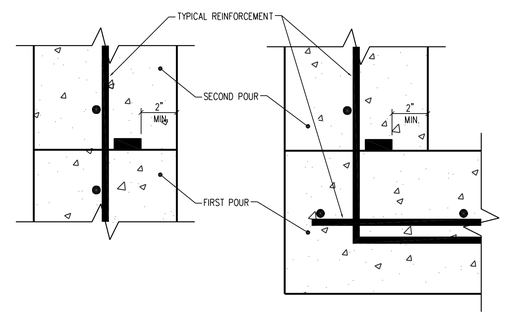

NOTE:
INSTALL WATERSTOP ON WET SIDE(S) OF REINFORCEMENT.

TYPICAL SYNKOFLEX WATERSTOP INSTALLATION — 4

NONE

ANNOTATION SYMBOLS — 1

NONE

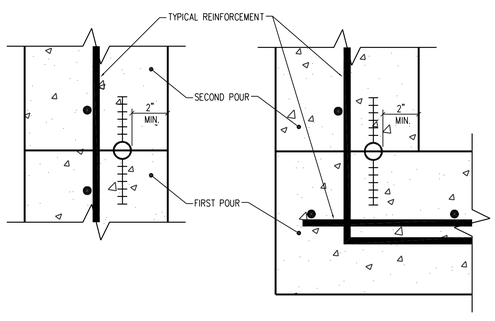

NOTE:
1. WATERSTOP SHALL BE 6" PVC RIBBED WITH 7/8" DIAMETER CENTERBULB UNLESS NOTED OTHERWISE.
2. INSTALL WATERSTOP ON WET SIDE(S) OF REINFORCEMENT.
3. ALL WATERSTOPS SHALL BE WELDED PER MANUFACTURER'S REQUIREMENTS.

TYPICAL PVC WATERSTOP INSTALLATION — 11

NONE

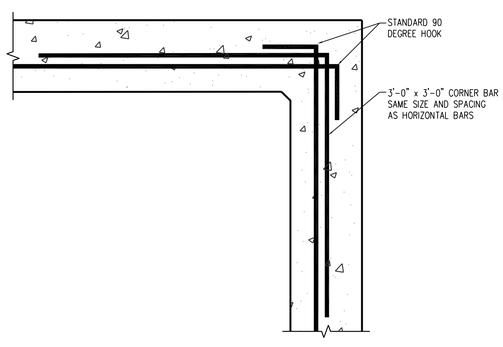

SINGLE MAT REINFORCING AT CORNER — 8

NONE

MATERIAL NOTE:
3/4" TO 1" CLEAR GRANULAR STONE WITH NO FINES PLACED IN MAXIMUM 6" THICK LIFTS.

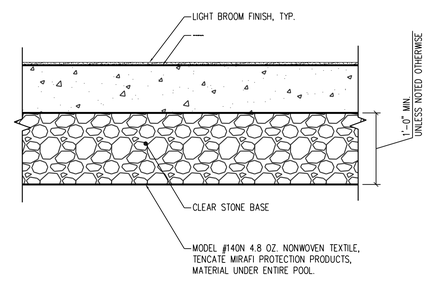

TYPICAL POOL BASE DETAIL — 5

NONE

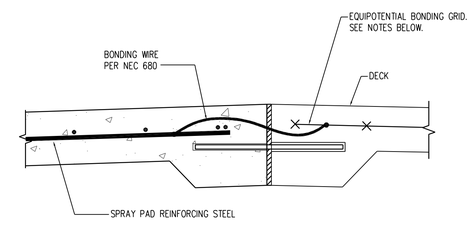

NOTES:
1. THIS DETAIL IS INTENDED TO ILLUSTRATE THE EQUIPOTENTIAL BONDING GRID AROUND THE SPRAY PAD AS REQUIRED BY NEC 680.
2. THE GRID SHALL CONFORM TO ALL NEC 680 REQUIREMENTS.
3. PER NEC 680, THE GRID SHALL:
   3.a. COMPLETELY SURROUND THE PERIMETER OF THE SPRAY PAD AND EXTEND 3 FEET HORIZONTALLY FROM THE INSIDE WALLS OF THE SPRAY PAD.
   3.a. BE ARRANGED IN A 12" X 12" (OR LESS) NETWORK OF CONDUCTORS IN A UNIFORMLY SPACED PATTERN.
   3.a. BE BONDED TO THE SPRAY PAD REINFORCING STEEL.
4. THIS DETAIL IS NOT INTENDED TO DETAIL THE SPRAY PAD OR THE DECKS. THE ABOVE SECTION IS GENERIC IN NATURE AND IS NOT TYPICAL. SEE SPRAY PAD SECTIONS AND DECK SECTIONS FOR ADDITIONAL SPRAY PAD AND DECK CONSTRUCTION REQUIREMENTS.
5. SEE SPRAY PAD ELECTRICAL DRAWINGS FOR ADDITIONAL BONDING & GROUNDING REQUIREMENTS.

SPRAY PAD EQUIPOTENTIAL BONDING GRID DETAIL — 2

NONE

UGARTE & ASSOCIATES, INC.
ARCHITECTS PLANNERS
434 9th AVENUE WEST
PALMETTO, FLORIDA 34221
PHONE (941)729–5691
FAX (941)729–5692
AA-C001654

WTI
WATER TECHNOLOGY INC

GENERAL NOTES AND SCHEDULES

MANATEE COUNTY – LINCOLN SPLASH PARK

REVISIONS:

PHASE: REVIEW
PROJECT NO: 2009–46
DATE: 08.16.2010
DRAWN BY: AMJ
CHK'D BY: SAL

© UGARTE & ASSOCIATES, INC. 2010

BRIAN FREBER, P.E.
LIC. NO. 60424

SHEET
PL1.01

8/12/2010 1:11 PM Scott LeMonde – CAD DWG FILE: 00489 PL1.01.DWG