Exhibit 5

CONSTRUCTION PLANS FOR

WASHINGTON PARK PRESERVE PHASE I

SECTION 12, TOWNSHIP 34 SOUTH, RANGE 17 EAST, MANATEE COUNTY, FLORIDA

CLIENT:

BOARD OF COUNTY COMMISSIONERS, MANATEE COUNTY, FL

1112 MANATEE AVENUE WEST
BRADENTON, FL 34205
(941) 748-4501

NOTES

GENERAL SITE CONSTRUCTION NOTES:

1. THE CONTRACTORS WORKING ON THIS SITE SHALL TAKE GREAT CARE IN AVOIDING UNNECESSARY IMPACTS TO WETLANDS, VEGETATION, AND WILDLIFE.
2. THE INFORMATION PROVIDED IN THESE PLANS IS TO ASSIST THE CONTRACTOR IN ASSESSING THE NATURE AND EXTENT OF THE CONDITIONS WHICH MAY BE ENCOUNTERED DURING THE COURSE OF WORK. ALL CONTRACTORS ARE DIRECTED PRIOR TO BIDDING TO CONDUCT INVESTIGATIONS THEY DEEM NECESSARY TO ARRIVE AT THEIR OWN CONCLUSIONS REGARDING THE ACTUAL CONDITIONS THAT MAY BE ENCOUNTERED AND UPON WHICH THEIR BIDS WILL BE BASED.
3. THE CONTRACTOR SHALL OBTAIN AND/OR VERIFY EXISTENCE OF ALL REQUIRED PERMITS PRIOR TO STARTING CONSTRUCTION. THE CONTRACTOR SHALL BE RESPONSIBLE FOR OBTAINING ANY PERMITS NOT FURNISHED BY THE OWNER.
4. PRIOR TO THE START OF CONSTRUCTION ACTIVITY IT SHALL BE THE CONTRACTOR'S RESPONSIBILITY TO NOTIFY 'SUNSHINE STATE ONE CALL (1-800-432-4770)', MANATEE COUNTY PUBLIC WORKS DEPARTMENT, FLORIDA POWER & LIGHT, VERIZON AND ANY OTHER UTILITIES (ELECTRIC, PHONE, GAS, CABLE, ETC.). IT IS THE CONTRACTORS RESPONSIBILITY TO PROTECT EXISTING UTILITIES FROM DAMAGE.
5. ALL MATERIALS AND CONSTRUCTION SHALL BE IN ACCORDANCE WITH FDOT STANDARDS AND SPECIFICATIONS.
6. IF HUMAN REMAINS OR ARCHEOLOGICAL ARTIFACTS ARE DISCOVERED DURING THE COURSE OF CONSTRUCTION, THE CONTRACTOR MUST STOP WORK IMMEDIATELY AND PROMPTLY NOTIFY THE COUNTY PROJECT MANAGER AND FLORIDA DEPARTMENT OF STATE DIVISION OF HISTORICAL RESOURCES.
7. THE CONTRACTOR SHALL NOT ENTER UPON, OR ALTER THE WETLAND PRESERVE AREAS THAT MAY BE ONSITE OR DIRECTLY ADJACENT TO THE PROJECT AREA. ALL WORK PERFORMED IN THE VICINITY OF OPEN WATER, WETLANDS, AND WETLAND HABITAT RESTORATIONS IS TO BE PERFORMED IN COMPLIANCE WITH THE ENVIRONMENTAL PERMITS FOR THE SITE. THE CONTRACTOR WILL BE RESPONSIBLE FOR ANY FINE RESULTING FROM VIOLATION OF PERMIT CONDITIONS.
8. ELEVATIONS SHOWN HEREON ARE RELATIVE TO NORTH AMERICAN VERTICAL DATUM 1988 BASED ON SITE TOPOGRAPHIC DATA COLLECTED BY HYATT SURVEY SERVICES, JANUARY 2017. SITE BENCHMARK CP 10 IS A IRON RAD & CAP, NORTHING 1166241.612, EASTING 475759.976, EL=19.74' NAVD'88. CONVERSION FROM NAVD88 TO NGVD'29 IS +0.98'.
9. THE CONTRACTOR SHALL CLEAR AND GRUB TO REMOVE STUMPS, ROOTS, TREES, VEGETATION AND OBSTRUCTIONS TO THE WORK IN ALL AREAS DESIGNATED FOR SITE GRADING. ALL STUMPS, ROOTS, AND OTHER DEBRIS SHALL BE REMOVED FROM WITHIN THE CONSTRUCTION AREAS TO A DEPTH OF AT LEAST 1 FOOT BELOW THE PROPOSED GRADE.
10. ALL CLEARING, GRUBBING AND EXCAVATED MATERIAL WILL BE BURNED OR REMOVED FROM SITE AS DIRECTED BY PROJECT MANAGER.
11. ALL CONSTRUCTION DEBRIS WILL BE REMOVED FROM THE SITE AND DISPOSED OF PROPERLY.
12. IT IS THE CONTRACTOR'S RESPONSIBILITY TO CALCULATE AND VERIFY ALL CUT AND FILL QUANTITIES OF EARTHWORK FOR THE PROJECT. A BULKING/COMPACTION FACTOR SHOULD BE TAKEN INTO ACCOUNT WHEN FIGURING VOLUMES OF FILL PLACEMENT.
13. IMMEDIATELY BEFORE REQUESTING FINAL INSPECTIONS, THE CONTRACTOR SHALL CHECK ALL LINES AND DRESS TO THE PROPER GRADES/CONTOURS. ALL AREAS ARE TO BE STABILIZED AND MAINTAINED UNTIL ACCEPTANCE. WHEN UPLAND AND WETLAND PLANTING AREAS ARE INDICATED ON DRAWINGS OR SPECIFIED, THE CONTRACTOR SHALL MAKE ALLOWANCES WHEN ROUGH GRADING FOR THE FINISHED GRADES IN THESE AREAS.
14. POST GRADING SOIL CONDITIONS SHALL BE APPROPRIATE FOR PLANTING WITH LIMITED COMPACTION AS DETERMINED BY PROJECT ECOLOGIST OR LANDSCAPE ARCHITECT.
15. ANY DISTURBED AREAS ABOVE MEAN HIGH WATER, NOT HARDSCAPED OR LANDSCAPED, WILL BE SEEDED/MULCHED, HYDROSEEDED, SODDED OR PLANTED WITH MATERIALS AS SPECIFIED.
16. EXISTING WELL HEADS TO BE PROTECTED & MARKED WITH ORANGE SAFETY FENCE (PLASTIC "SNOW FENCE") OR PROPERLY PLUGGED AND ABANDONED.
17. THE CONTRACTOR SHALL OBTAIN ALL APPLICABLE NPDES STORMWATER PERMITTING FOR CONSTRUCTION ACTIVITIES FROM THE FLORIDA DEPARTMENT OF ENVIRONMENTAL PROTECTION (FDEP). THE CONTRACTOR SHALL BEAR ALL RESPONSIBILITY AND COSTS FOR THE APPLICABLE PERMITTING APPLICATION AND SUPPORTING DOCUMENTATION.
18. IF IT IS NECESSARY FOR GROUNDWATER DEWATERING TO DISCHARGE OFFSITE, THEN THE CONTRACTOR SHALL OBTAIN ALL APPLICABLE PERMITTING FROM THE FLORIDA DEPARTMENT OF ENVIRONMENTAL PROTECTION (FDEP). THE CONTRACTOR SHALL BEAR ALL RESPONSIBILITY AND COSTS FOR OBTAINING AND/OR MODIFYING ALL APPLICABLE PERMITTING FOR THE DISCHARGE OF GROUNDWATER DEWATERING AND FOR COMPLYING WITH ALL USACE, SWFWMD, AND FDEP PERMITTING CONDITIONS.
19. UPON COMPLETION OF CONSTRUCTION, GRASSED AREAS ARE TO BE MAINTAINED TO AVOID BARE EARTH CONDITIONS WHICH INCREASE THE POTENTIAL FOR EROSION.
20. CONTOUR LINES OUTSIDE OF PROPERTY BOUNDARY SHOWN OBTAINED FROM 2007 SWFWMD LIDAR (NAVD'88).
21. PROPOSED TRAILS TO BE STAKED PRIOR TO INSTALLATION. TRAIL ALIGNMENT WILL BE FIELD REVIEWED BY COUNTY STAFF OR PROJECT ECOLOGIST. TRAIL ALIGNMENT MAY BE REVISED AND FIELD STAKED BY OR UNDER THE SUPERVISION OF COUNTY STAFF OR PROJECT ECOLOGIST WHERE IMPACTS TO ECOLOGICAL RESOURCES (E.G., TREES, ROOTS, OR DESIRABLE VEGETATION) MAY BE AVOIDED.
22. CERTAIN TREES ARE DESIGNATED BY THE OWNER TO BE SAVED AND PROTECTED BY THE CONTRACTOR. THESE INCLUDE THE EXISTING OAK TREES ALONG THE SOUTH PROJECT BOUNDARY. IT IS ASSUMED THESE TREES ARE HEALTHY AND ARE EXPECTED TO BE PART OF THE LANDSCAPE DEVELOPMENT. THEREFORE, IF ANY TREE(S) ARE DAMAGED BY CONSTRUCTION OPERATIONS OR BY OTHER MEANS (EXCLUDING LIGHTNING, WINDSTORM AND OTHER ACTS OF GOD) AND PERISHES WITHIN THE CONSTRUCTION PERIOD, IT SHALL BE THE RESPONSIBILITY OF THE CONTRACTOR TO REMOVE AND DISPOSE OF THOSE TREES. MANATEE COUNTY NRD APPROVAL IS REQUIRED PRIOR TO REMOVAL OF ANY TREES DESIGNATED TO REMAIN. NO ADDITIONAL COMPENSATION SHALL BE MADE BY THE OWNER FOR THE LABOR, MATERIAL, OR MACHINERY REQUIRED TO REMOVE SAID TREE(S).
23. WHERE EXCAVATIONS ARE IN CLOSE PROXIMITY OF TREES, THE CONTRACTOR SHALL USE EXTREME CARE TO NOT DAMAGE THE ROOT SYSTEM. NO EQUIPMENT, SUPPLIES, OR VEHICLES SHALL BE STORED OR PARKED WITHIN THE DRIP LINE OF TREES TO REMAIN AND BE PRESERVED. IT SHALL BE THE RESPONSIBILITY OF THE CONTRACTOR TO INFORM ALL OF HIS EMPLOYEES AND SUBCONTRACTORS OF THIS REQUIREMENT AND TO ENFORCE SAME.
24. PRIOR TO THE START OF CONSTRUCTION ACTIVITIES, PRESERVE AREAS WITHIN AND ADJOINING THE AREA OF CONSTRUCTION ACTIVITY SHALL BE PROTECTED BY ERECTION OF TREE PROTECTION BARRICADES AND/OR SILT BARRIERS. TREE PROTECTION BARRICADES SHALL MEET THE STANDARDS OF MANATEE COUNTY LAND DEVELOPMENT CODE. SILT BARRIERS SHALL BE CONSTRUCTED IN ACCORDANCE WITH THE BEST MANAGEMENT PRACTICES DETAIL DRAWING. THE ENGINEER SHALL DETERMINE THE EXTENT AND TYPE OF PROTECTIVE MEASURES TO BE CONSTRUCTED FOR THE PROTECTION OF PRESERVE AREAS SUBJECT TO THE APPROVAL OF MANATEE COUNTY PNRD THE CONTRACTOR SHALL NOTIFY THE ENGINEER & MANATEE COUNTY PNRD WHEN PRESERVE AREA BARRICADES AND BARRIERS ARE IN PLACE. THE CONTRACTOR IS RESPONSIBLE TO OBTAIN ANY REQUIRED TREE REMOVAL PERMIT FROM MANATEE COUNTY.

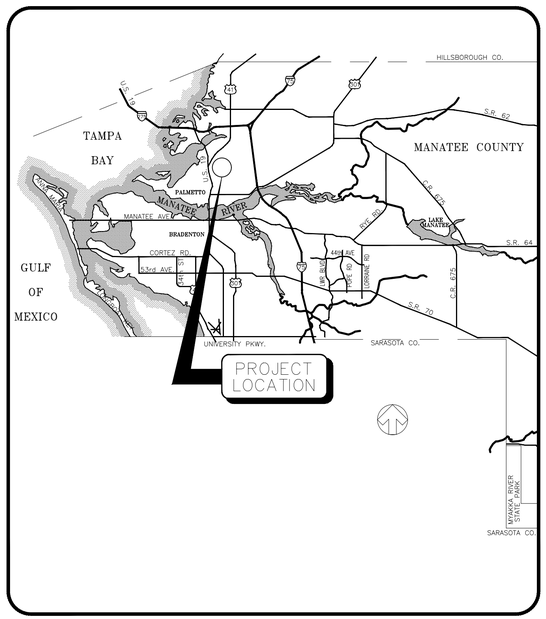

LOCATION MAP

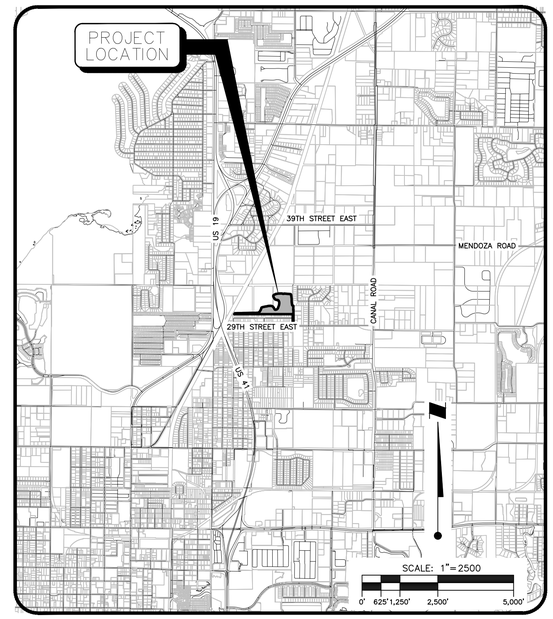

SITE MAP

INDEX TO SHEETS

NO.	DATE	DESCRIPTION	BY
I			
H	4/17/23	REVISIONS ON SHEETS 2-17, 22, 23, 27	RQS/89561
G	12/14/22	REVISIONS ON SHEETS 2-17, 20-23, 27	RQS/89561
F	11/9/22	REVISIONS ON SHEETS 12,13,14,16,22,23	RQS/89561
E	6/21/22	REVISIONS ON SHEETS 2,3,6,8,10,12,13,15,17,22,27	RQS/89561
D	04/04/22	REVISIONS ON SHEETS 12-16, 22, 23	RQS/89561
C	04/19/21	REVISIONS ON SHEETS 2-10, 12-19, 21-23, 27	RQS/89561
B	07/10/19	REVISIONS ON SHEETS 2,3,5,6,7,8,9,10,14,16,17,22,LP-101,LP-102,LP-501,LP-601	KG/101511
A	09/05/18	REVISIONS ON SHEETS 1-27	RB/115155

STATUS : REVISIONS

ENGINEERING TECH	PROJECT ECOLOGIST	PROJECT MANAGER
-	-	R. QUINCE SELLERS, P.E. FLORIDA LICENSE NO. 49374

DATE _____ CHECKED BY _____

RESERVED FOR STATUS AND DATE STAMPS

PROJECT NUMBER
177310895

DATE	INDEX NUMBER
JULY 2019	D-177310895-01C-001

Stantec
6900 Professional Parkway East, Sarasota, FL 34240-8414
Phone 941-907-6900 • *Fax* 941-907-6910
Certificate of Authorization #27013 • www.stantec.com

Saved: 4/18/2023 8:11 AM QSELLERS | Plotted: 4/18/2023 8:40:10 AM QSELLERS | K:\1773\active\177310895\05_report_deliv\drawing_design\cad_fp\sheet\177310895-01C-001-CVR2022.dwg

REV NO.	REVISION	DATE	DRAWN BY / EMP. NO.	CHECKED BY / EMP. NO.
7	EDIT PHASE LINE	4/17/23	RQS/89561	ET
6	ADD PHASE LINE/LABELS	12/14/22	RQS/89561	ET
5	REV RR/SW LOCATION, ADD TRANSFORMER, FPL EASEMENT	6/21/22	RQS/89561	ET
4	REVISION TO INTERNAL LIMIT OF CONSTRUCTION PER MC	4/14/21	RQS/89561	EA
3	REVISION TO RESTROOM, PAVILION, AND PLAYGROUND PER MC	1/6/21	KG/101511	RQS/89561
2	REVISE TEXT FOR PLAYGROUND AND PLAY (GRASS) FIELD	7/10/19	KG/101511	RQS/89561
1	REVISE 8TH AVE. EAST STREET NAME, REVISE FENCE SCALE	8/27/18	KG/101511	RQS/89561

ACTIVITY	INITIALS/EMP. NO.	DATE
DESIGNED BY:		
DRAWN BY:		
CHECKED BY:		
CONTRACT ADMIN. BY:		
WM APPROVED BY:		

Stantec
6900 Professional Parkway East, Sarasota, FL34240-8414
Phone 941-907-6900 • Fax 941-907-6910
Certificate of Authorization #27013 • www.stantec.com

CLIENT: MANATEE BOARD OF COUNTY COMMISSIONERS

PROJECT: WASHINGTON PARK PRESERVE PHASE I

DATE: JULY 2019

HORIZONTAL SCALE:

VERTICAL SCALE:

SEC: 12 TWP: 34S RGE: 17E

CROSS REFERENCE FILE NO.:

PROJECT NUMBER: 177310895

TITLE: AERIAL LOCATION MAP

R. QUINCE SELLERS, P.E.
FLORIDA LICENSE NO. 49374

INDEX NUMBER:

SHEET NUMBER: 2 OF 28

Saved: 4/18/2023 8:21 AM QSELLERS | Plotted: 4/18/2023 8:40:31 AM QSELLERS | V:\177310895\05_report_delv\drawing_design\civil_fig\sheet\177310895-01C-002.dwg

GENERAL NOTES:

1. TOTAL PROPERTY BOUNDARY AREA (PARCEL 2519600007): 39.4± AC
2. PROJECT AREA WITHIN PROPERTY = 11.50± AC
   PROJECT AREA IN COUNTY R-O-W = 0.20 AC
   TOTAL PROJECT AREA = 11.70± AC
3. BOUNDARY DATA SHOWN IS FOR INFORMATIONAL PURPOSES ONLY AND DOES NOT CONSTITUTE A BOUNDARY SURVEY.
4. THE PROJECT WILL CONSIST OF A PUBLIC PASSIVE RECREATIONAL PRESERVE.
5. CURRENT ZONING IS RESIDENTIAL SINGLE FAMILY (RSF-4.5). THE SITE IS LOCATED WITHIN THE LIMITS OF THE MANATEE COUNTY WASHINGTON PARK PRESERVE. THE EXISTING LAND USE IS VACANT/COUNTY USE.
6. THE PROJECT IS RECREATION, LOW INTENSITY USE.
7. PROJECT IS LOCATED WITHIN FLOOD ZONE X AS PER FEMA FIRM COMMUNITY PANEL 12081C0166E (EFFECTIVE 3/17/2014).
8. SANITARY SEWER AND POTABLE WATER SERVICE WILL BE PROVIDED BY CONNECTION TO EXISTING FACILITIES MAINTAINED BY MANATEE COUNTY. ALL SANITARY SEWER AND POTABLE WATER CONSTRUCTION SHALL MEET MANATEE COUNTY PUBLIC WORKS STANDARDS. RECLAIMED WATER IS NOT CURRENTLY AVAILABLE FOR THIS SITE.
9. THE DEVELOPMENT SHALL ADHERE TO SECTION 715 OF THE MANATEE COUNTY LAND DEVELOPMENT CODE (LDC). SEE LANDSCAPE PLANS ENCLOSED.
10. ALL REQUIRED SITE IMPROVEMENTS SHALL BE CONSTRUCTED IN ACCORDANCE WITH SECTION 337, "INSTALLATION OF REQUIRED IMPROVEMENTS", OF THE MANATEE COUNTY LDC.
11. THERE ARE NO KNOWN EXISTING EASEMENTS, BUILDINGS, STREETS, AND/OR HISTORIC SITES LOCATED WITHIN THE PROPERTY.
12. THERE ARE NO KNOWN EXISTING COVENANTS OR DEED RESTRICTIONS WHICH WOULD AT THIS TIME AFFECT THE PROPOSED DEVELOPMENT.
13. THIS PROJECT HAS BEEN DESIGNED TO PROVIDE REASONABLE ASSURANCE THAT ALL APPLICABLE PERMITS CAN BE OBTAINED.
14. THE STORMWATER MANAGEMENT SYSTEM FOR THIS DEVELOPMENT WILL BE MAINTAINED BY MANATEE COUNTY.
15. CONSTRUCTION SCHEDULE:
    APPROXIMATE START DATE: JULY 2021
    APPROXIMATE END DATE: JULY 2022
16. ALL COMMON IMPROVEMENTS AND OPEN SPACE WITHIN THE SITE WILL BE MAINTAINED BY MANATEE COUNTY.
17. THE STORMWATER MANAGEMENT SYSTEM HAS BEEN DESIGNED IN ACCORDANCE WITH MANATEE COUNTY REQUIREMENTS, AND CHAPTER 62-330 F.A.C. REQUIREMENTS.
18. THERE ARE NO EXISTING WETLANDS LOCATED WITHIN OR DIRECTLY ADJACENT TO THE PROJECT AREA. AN ENVIRONMENTAL RESOURCE PERMIT FROM SWFWMD WILL BE OBTAINED AS REQUIRED.
19. IN ORDER TO MEET THE PARKING DEMANDS ANTICIPATED BY MANATEE COUNTY, THE FOLLOWING PARKING SPACES ARE PROPOSED:
    20 VEHICLE PARKING SPACES (INCLUDES 3 HANDICAP SPACES)
    1 BIKE RACK SPACE
20. THERE NO KNOWN WELLS LOCATED WITHIN THE PROJECT AREA.
21. THERE ARE NO KNOWN PERENNIAL STREAMS LOCATED WITHIN OR DIRECTLY ADJACENT TO THE PROJECT AREA.
22. ALL PROPOSED SIGNAGE WILL BE IN ACCORDANCE WITH THE MANATEE COUNTY LAND DEVELOPMENT CODE.
23. DRAINAGE AND UTILITY EASEMENTS WILL BE PROVIDED AS REQUIRED BY THE MANATEE COUNTY LAND DEVELOPMENT CODE.
24. ALL SEDIMENT AND EROSION CONTROL DEVICES SHALL BE IN PLACE PRIOR TO CONSTRUCTION ACTIVITIES.
25. ALL EXISTING FEATURES ARE LABELED AS EXISTING ON THE SITE PLAN SHEETS. ALL OTHER FEATURES NOT LABELED EXISTING, ARE PROPOSED.
26. ALL PROPOSED SETBACKS ARE SHOWN ON THE SITE PLAN.
27. ALL DRIVEWAYS AND DRIVE AISLES WILL BE CONSTRUCTED IN ACCORDANCE WITH THE MANATEE COUNTY LDC AND WILL BE MAINTAINED BY MANATEE COUNTY. ALL TRAFFIC CONTROL SIGNAGE AND PAVEMENT MARKINGS, SHALL CONFORM TO FDOT AND MUTCD STANDARDS.
28. SOLID WASTE WILL BE COLLECTED BY MANATEE COUNTY PARKS AND NATURAL RESOURCES STAFF AND TRANSPORTED TO THE EXISTING OFFSITE SOLID WASTE COLLECTION FACILITIES.
29. NO PARKING LOT LIGHTING IS PROPOSED AT THIS TIME.
30. PROPOSED BUILDING SQUARE FOOTAGE (480 S.F. TOTAL):
    RESTROOM BUILDING = 480 S.F.
31. THE PROPOSED ON-SITE FIRE HYDRANT WILL PROVIDE FIRE FLOW AS REQUIRED BY NORTH RIVER FIRE DISTRICT FIRE MARSHAL.
32. ALL POTABLE WATER FACILITIES DOWNSTREAM OF THE METERS, AND ALL WASTEWATER FACILITIES ON PARK PROPERTY SHALL BE PARKS AND NATURAL RESOURCES DEPARTMENT OWNED AND MAINTAINED. ALL POTABLE WATER FACILITIES FROM THE TIE INTO EXISTING UP TO AND INCLUDING THE METER AND ALL WASTEWATER FACILITIES WITHIN THE PUBLIC RIGHT-OF-WAY SHALL BE UTILITY DEPARTMENT OWNED AND MAINTAINED. MAINTAINED.
33. PRIOR TO START OF CONSTRUCTION OF ANY WORK WITHIN THE MANATEE COUNTY RIGHT-OF-WAY (ROW) A TEMPORARY TRAFFIC CONTROL PLAN (TTCP) SHALL BE PREPARED AND SUBMITTED TO THE MANATEE COUNTY INFRASTRUCTURE INSPECTIONS DIVISION MANAGER.
34. ALL THE SIGNING AND PAVEMENT MARKINGS SHALL BE PROVIDED IN ACCORDANCE WITH THE LATEST EDITIONS OF THE MANUAL ON UNIFORM TRAFFIC CONTROL DEVICES (MUTCD), FDOT DESIGN STANDARDS, AND THE MANATEE COUNTY PUBLIC WORKS DEPARTMENT - HIGHWAY, TRAFFIC, AND STORMWATER STANDARDS. TRAFFIC CONTROL DEVICES THAT DO NOT CONFORM TO THE LATEST EDITION OF THE MANATEE COUNTY PUBLIC WORKS DEPARTMENT HIGHWAY, TRAFFIC & STORMWATER STANDARDS WITHIN THE PUBLICLY MAINTAINED RIGHT OF WAY WILL REQUIRE A SIGN AND HARDWARE DIAGRAM AND, IF ACCEPTABLE, AN EXECUTED MAINTENANCE AGREEMENT PRIOR TO APPROVAL OF CONSTRUCTION PLANS.
35. PARK SIGN AND DEDICATION PLAQUE SIGN ARE TO BE FIELD DETERMINED AT PARK ENTRANCE AND TYPICAL OF SIMILAR SIGNS AT OTHER COUNTY PARK PRESERVES AND IN ACCORDANCE WITH COUNTY STANDARDS.
36. EARTHMOVING ACTIVITIES AND EXCAVATION REQUIRING DEWATERING SHALL BE IN ACCORDANCE WITH THE SOIL AND DEWATERING MANAGEMENT PLAN, DATED AUGUST 4, 2020, PREPARED BY PROFESSIONAL SERVICES INDUSTRY INC. (PSI) WITH OVERSIGHT PROVIDED BY PSI OR OTHER ENVIRONMENTAL PROFESSIONAL SERVICES.

FINAL SITE PLAN STIPULATIONS:

1. AN ENVIRONMENTAL RESOURCE PERMIT (ERP) APPROVED BY SOUTHWEST FLORIDA WATER MANAGEMENT DISTRICT (SWFWMD) SHALL BE PROVIDED TO THE ENVIRONMENTAL REVIEW SECTION (ERS) FOR REVIEW PRIOR TO COMMENCEMENT OF CONSTRUCTION.
2. THE APPLICANT SHALL BE AWARE THAT THE STATE ENDANGERED GOPHER TORTOISE AND ITS BURROWS ARE PROTECTED. IF GOPHER TORTOISES OR THEIR BURROWS ARE FOUND ON THE SITE AS VEGETATION CLEARING OCCURS, THE APPLICANT SHALL PROVIDE COPIES OF THE PROPER FLORIDA FISH AND WILDLIFE CONSERVATION COMMISSION (FFWCC) PERMITS, AND MAPS SHOWING LOCATIONS OF ALL BURROWS AND ANY ENCOUNTERS TO ENVIRONMENTAL REVIEW SECTION STAFF.
3. THE ENVIRONMENTAL NARRATIVE (STANTEC, JULY 5, 2018) STATES THAT ALL NUISANCE AND EXOTIC SPECIES WILL BE REMOVED IN ALL AREAS TO BE CLEARED FOR IMPROVEMENTS DURING CONSTRUCTION. ALL BRAZILIAN PEPPER WILL BE REMOVED FROM THE UPLAND AREAS. OTHER EXOTIC AND NON-NATIVE SPECIES WILL BE REMOVED AND REPLACED WITH NATIVE SPECIES ON A PHASED BASIS.
4. THE ENVIRONMENTAL NARRATIVE (STANTEC, JULY 5, 2018) STATES ALL NATIVE TREES ON SITE ARE OUTSIDE THE AREA OF CONSTRUCTION IMPACT OR WILL BE PRESERVED BY FIELD LOCATING ALL TRAILS TO AVOID NATIVE TREES.
5. A TOTAL OF THREE SEPARATE INSPECTIONS BY ERS STAFF ARE REQUIRED: TWO (2) SEPARATE INSPECTIONS BY ERS STAFF ARE REQUIRED PRIOR TO AUTHORIZATION OF CONSTRUCTION AND/OR LAND CLEARING ACTIVITIES AND ONE (1) FINAL SITE INSPECTION FOR REMOVAL OF EROSION AND SEDIMENT CONTROL (ESC) DEVICES:
   i. YOU ARE AUTHORIZED TO STAKE EROSION AND SEDIMENT CONTROL (ESC) DEVICE LOCATIONS. AFTER STAKING ESC MEASURES, ERS STAFF MUST BE CONTACTED TO INSPECT THE STAKED LOCATIONS.
   ii. AFTER THE INSTALLATION OF ESC DEVICES HAS BEEN COMPLETED, A SECOND INSPECTION IS REQUIRED TO ENSURE ADEQUACY.

   PER SECTION 355.3 MLDC THE APPLICANT SHALL SCHEDULE AN ON-SITE MEETING WITH STAFF FROM THE BUILDING AND DEVELOPMENT SERVICES DEPARTMENT (ERS) AND THE PUBLIC WORKS DEPARTMENT, AS WELL AS THE ENGINEER OF RECORD AND THE CONTRACTOR. FINAL APPROVAL OF THE ESCP AND AUTHORIZATION OF CONSTRUCTION WILL BE GRANTED ONLY AFTER AN ON-SITE MEETING HAS BEEN CONDUCTED. THE SECOND INSPECTION CAN BE INCORPORATED IN THE THE ONSITE MEETING REQUIRED BY MCLDC SECTION 355.3.

   iii. AFTER CONSTRUCTION IS COMPLETE, A THIRD INSPECTION IS REQUIRED TO INSPECT THAT THE AREA HAS BEEN STABILIZED AND ALL ESC DEVISES HAVE BEEN REMOVED FROM THE PROJECT SITE.

SCALE IN FEET
80 0 40 80

NOTES:

1. SEE AERIAL LOCATION MAP (SHEET 2) FOR LEGEND.
2. SEE BEST MANAGEMENT PRACTICES PLAN (SHEET 27) FOR SILT FENCE LOCATIONS.
3. SEE INTERK/PSI SOIL AND DEWATERING MANAGEMENT PLAN AND SHEET X01 FOR ADDITIONAL INFORMATION ON SOIL MANAGEMENT DURING CONSTRUCTION.

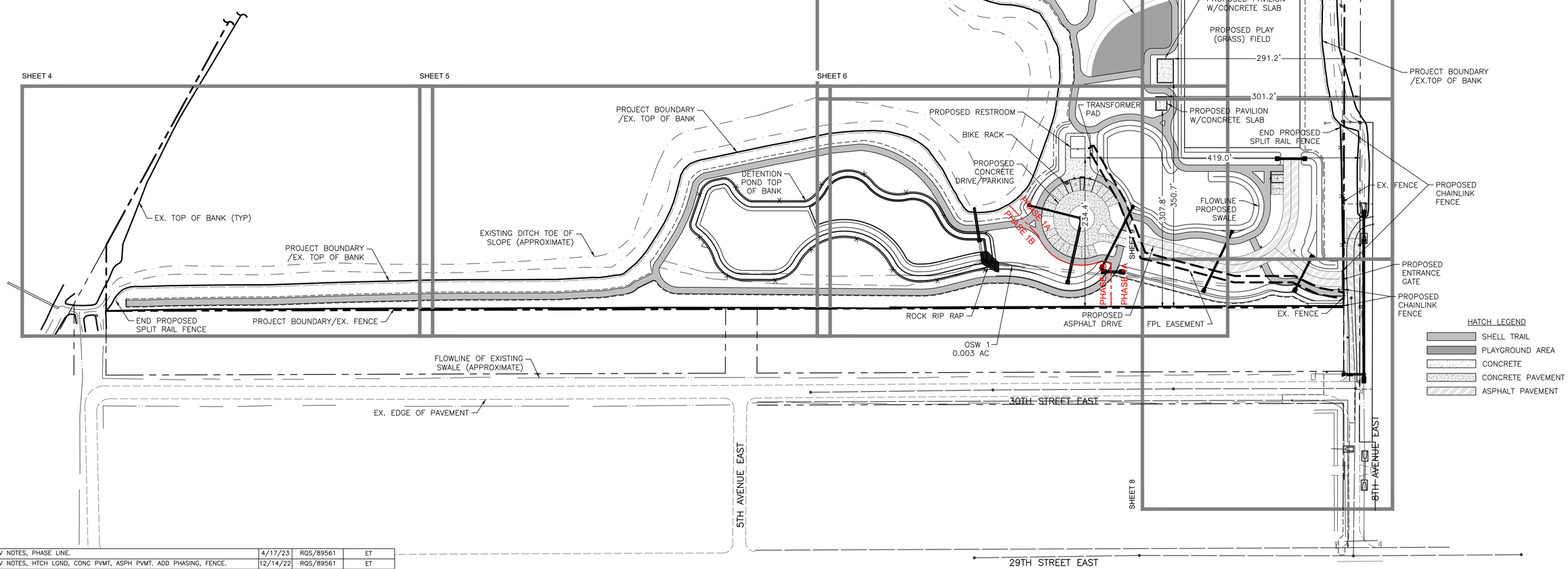

△REV NO.	REVISION	DATE	DRAWN BY / EMP. NO.	CHECKED BY / EMP. NO.
8	REV NOTES, PHASE LINE.	4/17/23	RQS/89561	ET
7	REV NOTES, HTCH LGND, CONC PVMT, ASPH PVMT. ADD PHASING, FENCE.	12/14/22	RQS/89561	ET
6	REV RR/SW LOCATION, ADD TRANSFORMER PAD, FPL EASEMENT	6/21/22	RQS/89561	ET
5	REVISION TO INTERNAL LIMIT OF CONSTRUCTION PER MC	4/14/21	RQS/89561	EA
4	REVISION TO RESTROOM, PAVILION, REVISE NOTES, AND PLAYGROUND PER MC	1/25/21	KG/101511	RQS/89561
3	REVISE TEXT FOR PLAYGROUND AND PLAY (GRASS) FIELD	7/10/19	KG/101511	RQS/89561
2	ADD ASPHALT HATCHING	10/18/18	KG/101511	RQS/89561
1	ADD NOTE 34, ADD FINAL SITE PLAN STIPULATIONS	8/27/18	KG/101511	RQS/89561

ACTIVITY	INITIALS/EMP. NO.	DATE
DESIGNED BY:		
DRAWN BY:		
CHECKED BY:		
CONTRACT ADMIN. BY:		
WM APPROVED BY:		

Stantec
6900 Professional Parkway East, Sarasota, FL34240-8414
Phone 941-907-6900 ♦ Fax 941-907-6910
Certificate of Authorization #27013 ♦ www.stantec.com

CLIENT: MANATEE BOARD OF COUNTY COMMISSIONERS

PROJECT: WASHINGTON PARK PRESERVE PHASE I

DATE: JULY 2019
HORIZONTAL SCALE:
VERTICAL SCALE:
SEC: 12 TWP: 34S RGE: 17E
CROSS REFERENCE FILE NO.:
PROJECT NUMBER: 177310895

TITLE: SITE PLAN KEY SHEET

R. QUINCE SELLERS, P.E.
FLORIDA LICENSE NO. 49374
INDEX NUMBER:
SHEET NUMBER: 3 OF 28

Saved: 4/17/2023 7:18 PM QSELLERS | Plotted: 4/18/2023 8:40:44 AM QSELLERS | \\A1773\active\177310895\05_report_delv\drawing_design\cad_fg\sheet\177310895-01C-003.dwg

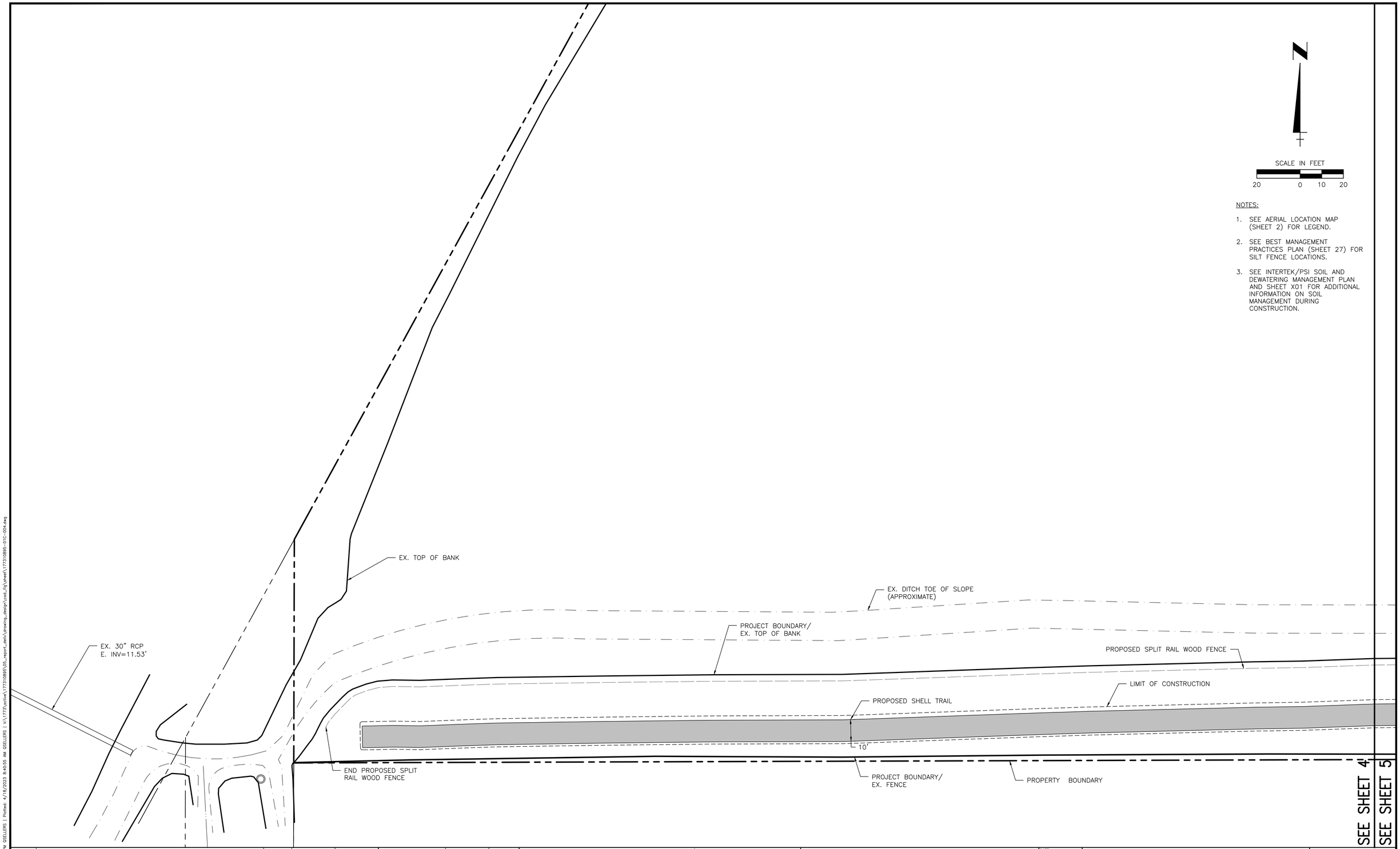

SCALE IN FEET

20 0 10 20

NOTES:

1. SEE AERIAL LOCATION MAP (SHEET 2) FOR LEGEND.
2. SEE BEST MANAGEMENT PRACTICES PLAN (SHEET 27) FOR SILT FENCE LOCATIONS.
3. SEE INTERTEK/PSI SOIL AND DEWATERING MANAGEMENT PLAN AND SHEET X01 FOR ADDITIONAL INFORMATION ON SOIL MANAGEMENT DURING CONSTRUCTION.

△REV NO.	REVISION	DATE	DRAWN BY / EMP. NO.	CHECKED BY / EMP. NO.
3	REV NOTES.	4/17/23	RQS/89561	ET
2	REV SR FNC LBL, NOTES.	12/14/22	RQS/89561	ET
1	REVISE TRAIL & FENCE LOCATION	9/05/18	RB/115155	RQS/89561

ACTIVITY	INITIALS/EMP. NO.	DATE
DESIGNED BY:		
DRAWN BY:		
CHECKED BY:		
CONTRACT ADMIN. BY:		
WM APPROVED BY:		

Stantec
6900 Professional Parkway East, Sarasota, FL34240-8414
Phone 941-907-6900 • Fax 941-907-6910
Certificate of Authorization #27013 • www.stantec.com

CLIENT: MANATEE BOARD OF COUNTY COMMISSIONERS

PROJECT: WASHINGTON PARK PRESERVE PHASE I

DATE: JULY 2019

HORIZONTAL SCALE:

VERTICAL SCALE:

SEC: 12 TWP: 34S RGE: 17E

CROSS REFERENCE FILE NO.:

TITLE: SITE PLAN

PROJECT NUMBER: 177310895

R. QUINCE SELLERS, P.E.
FLORIDA LICENSE NO. 49374

INDEX NUMBER:

SHEET NUMBER: 4 OF 28

Saved: 4/17/2023 6:46 PM QSELLERS | Plotted: 4/18/2023 8:40:55 AM QSELLERS | V:\1773\active\177310895\05_report_deliv\drawing_design\cnd_fig\sheet\177310895-01C-004.dwg

NOTES:

1. SEE AERIAL LOCATION MAP (SHEET 2) FOR LEGEND.
2. SEE BEST MANAGEMENT PRACTICES PLAN (SHEET 27) FOR SILT FENCE LOCATIONS.
3. SEE INTERTEK/PSI SOIL AND DEWATERING MANAGEMENT PLAN AND SHEET X01 FOR ADDITIONAL INFORMATION ON SOIL MANAGEMENT DURING CONSTRUCTION.

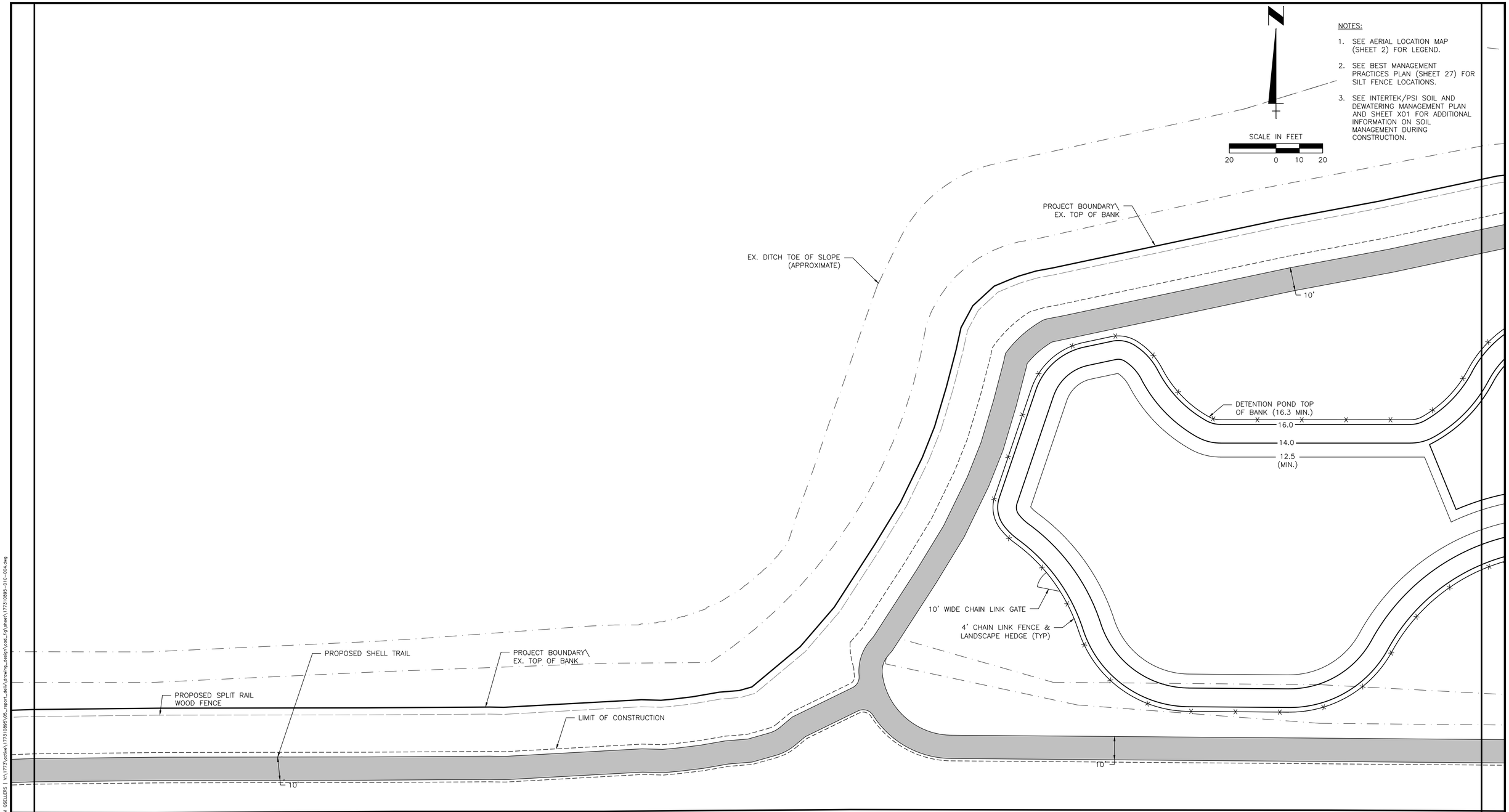

SEE SHEET 4
SEE SHEET 5
SEE SHEET 5
SEE SHEET 6

△REV NO.	REVISION	DATE	DRAWN BY / EMP. NO.	CHECKED BY / EMP. NO.
5	REV NOTES.	4/17/23	RQS/89561	ET
4	REV SR FNC LBL, PND FNC, NOTES.	12/14/22	RQS/89561	ET
3	REVISION TO RESTROOM, PAVILION, AND PLAYGROUND PER MC	1/6/21	KG/101511	RQS/89561
2	ADD 6' CHAIN LINK FENCE AROUND DETENTION POND	7/10/19	KG/101511	RQS/89561
1	REVISE TRAIL & FENCE LOCATION	9/05/18	RB/115155	RQS/89561

ACTIVITY	INITIALS/EMP. NO.	DATE
DESIGNED BY:		
DRAWN BY:		
CHECKED BY:		
CONTRACT ADMIN. BY:		
WM APPROVED BY:		

Stantec
6900 Professional Parkway East, Sarasota, FL34240-8414
Phone 941-907-6900 • Fax 941-907-6910
Certificate of Authorization #27013 • www.stantec.com

CLIENT: MANATEE BOARD OF COUNTY COMMISSIONERS

PROJECT: WASHINGTON PARK PRESERVE PHASE I

DATE: JULY 2019

HORIZONTAL SCALE:

VERTICAL SCALE:

SEC: 12 TWP: 34S RGE: 17E

CROSS REFERENCE FILE NO.:

PROJECT NUMBER: 177310895

TITLE: SITE PLAN

R. QUINCE SELLERS, P.E.
FLORIDA LICENSE NO. 49374

INDEX NUMBER:

SHEET NUMBER: 5 OF 28

Saved: 4/17/2023 6:46 PM QSELLERS | Plotted: 4/18/2023 8:41:00 AM QSELLERS | V:\177310895\05_report_dwlg\drawing_design\cad_fig\sheet\177310895-010-004.dwg

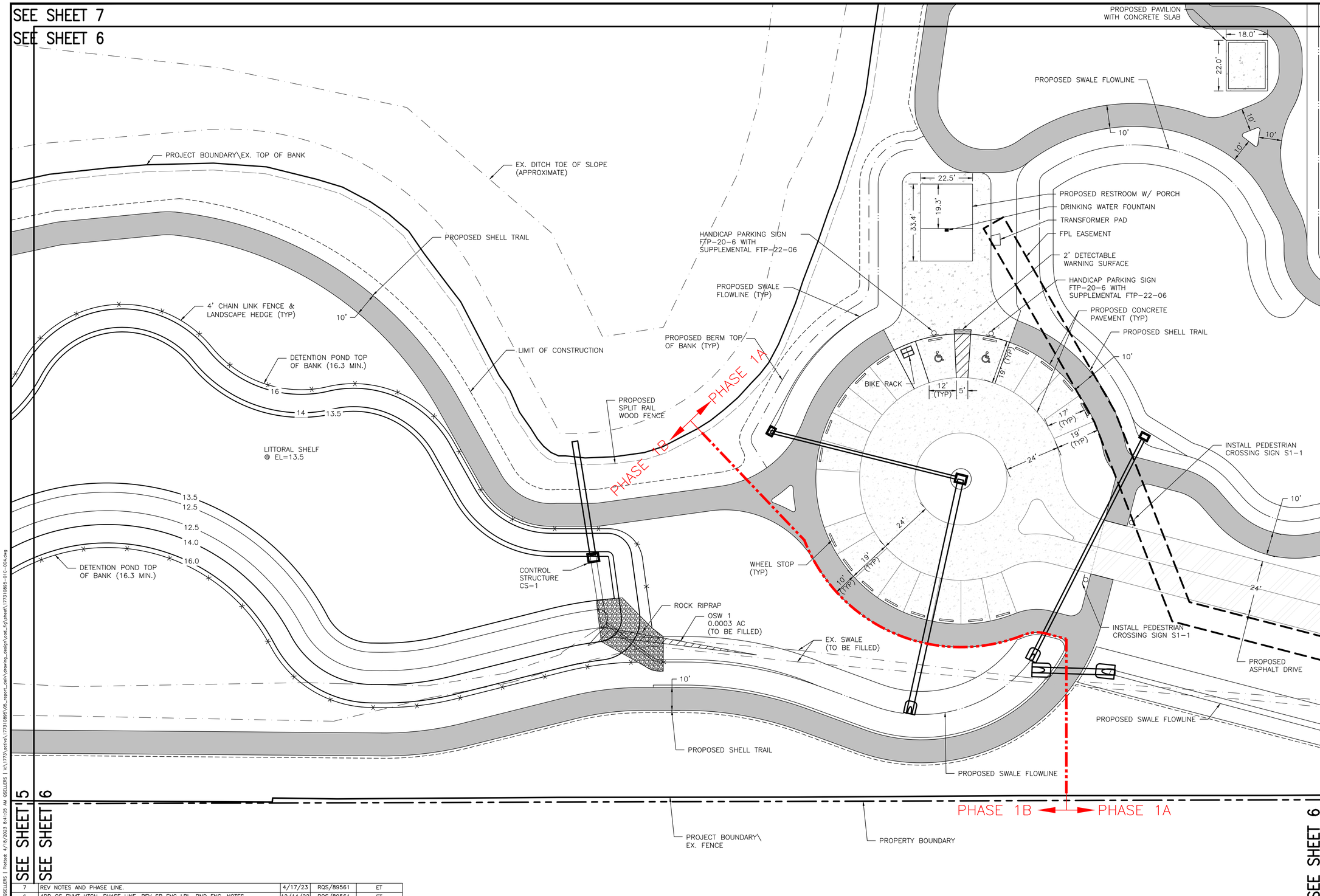

NOTES:

1. SEE AERIAL LOCATION MAP (SHEET 2) FOR LEGEND.
2. SEE BEST MANAGEMENT PRACTICES PLAN (SHEET 27) FOR SILT FENCE LOCATIONS.
3. SEE INTERTEK/PSI SOIL AND DEWATERING MANAGEMENT PLAN AND SHEET X01 FOR ADDITIONAL INFORMATION ON SOIL MANAGEMENT DURING CONSTRUCTION.

REV NO.	REVISION	DATE	DRAWN BY / EMP. NO.	CHECKED BY / EMP. NO.
7	REV NOTES AND PHASE LINE.	4/17/23	RQS/89561	ET
6	ADD OS PVMT HTCH, PHASE LINE. REV SR FNC LBL, PND FNC, NOTES.	12/14/22	RQS/89561	ET
5	REV RR/SW LOCATION, ADD TRANSFORMER, FPL EASEMENT	6/21/22	RQS/89561	ET
4	REVISION TO INTERNAL LIMIT OF CONSTRUCTION PER MC	4/14/21	RQS/89561	EA
3	REVISION TO RESTROOM, PAVILION, AND PLAYGROUND PER MC	1/6/21	KG/101511	RQS/89561
2	ADD 6' CHAIN LINK FENCE AROUND DETENTION POND	7/10/19	KG/101511	RQS/89561
1	REVISE TRAIL & FENCE LOCATIONS, ADD MES'S	9/05/18	RB/115155	RQS/89561

ACTIVITY	INITIALS/EMP. NO.	DATE
DESIGNED BY:		
DRAWN BY:		
CHECKED BY:		
CONTRACT ADMIN. BY:		
WM APPROVED BY:		

Stantec
6900 Professional Parkway East, Sarasota, FL34240-8414
Phone 941-907-6900 • Fax 941-907-6910
Certificate of Authorization #27013 • www.stantec.com

CLIENT: MANATEE BOARD OF COUNTY COMMISSIONERS

PROJECT: WASHINGTON PARK PRESERVE PHASE I

DATE: JULY 2019

HORIZONTAL SCALE:

VERTICAL SCALE:

SEC: 12 TWP: 34S RGE: 17E

TITLE: SITE PLAN

CROSS REFERENCE FILE NO.:

PROJECT NUMBER: 177310895

R. QUINCE SELLERS, P.E.
FLORIDA LICENSE NO. 49374
INDEX NUMBER:

SHEET NUMBER: 6 OF 28

Saved: 4/17/2023 6:46 PM QSELLERS | Plotted: 4/18/2023 8:41:05 AM QSELLERS | V:\1773\active\177310895\05_report_deliv\drawing_design\cnst_fig\sheet\177310895-01C-004.dwg

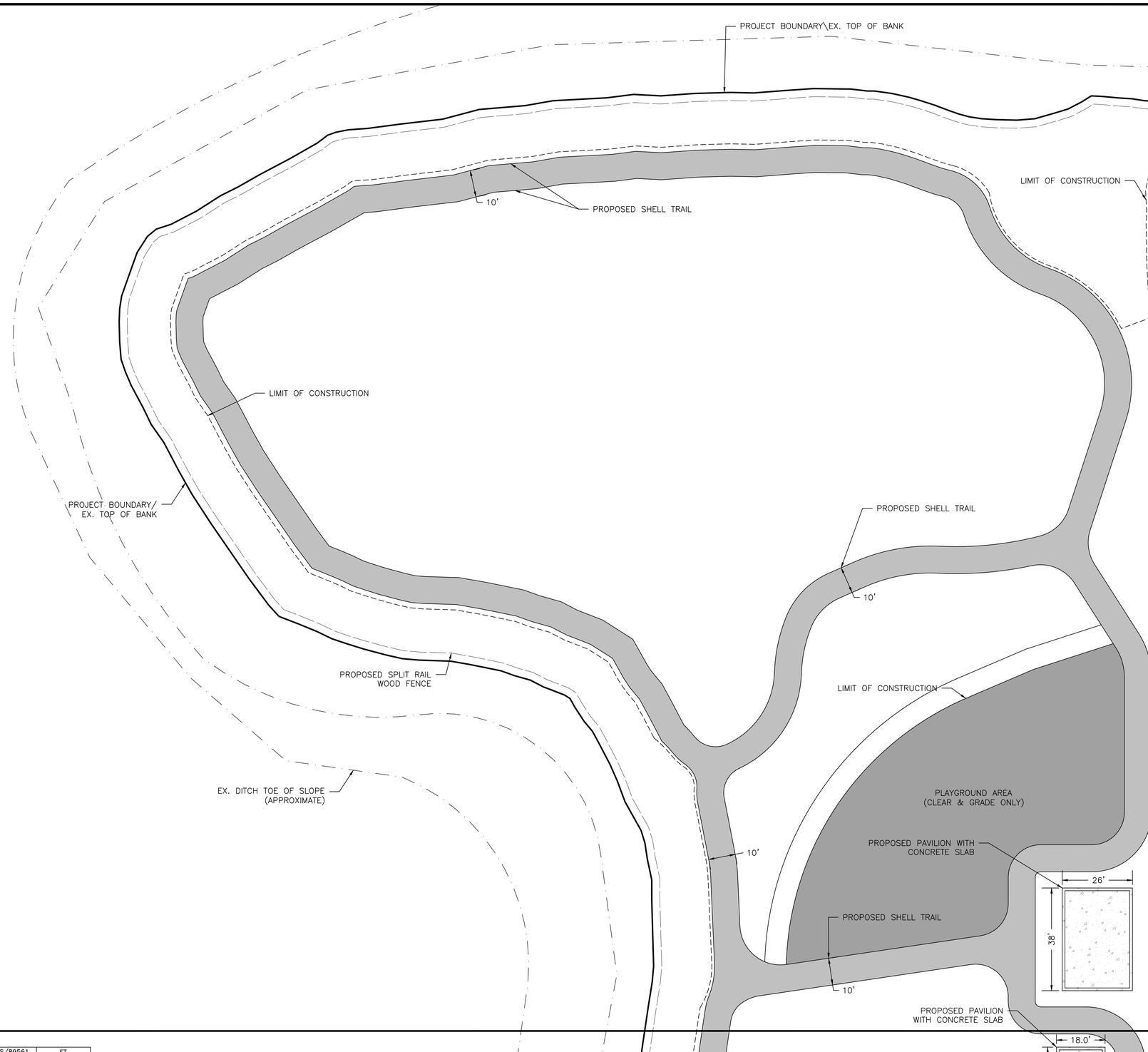

SEE SHEET 7

SEE SHEET 9

SCALE IN FEET

20 0 10 20

NOTES:

1. SEE AERIAL LOCATION MAP (SHEET 2) FOR LEGEND.
2. SEE BEST MANAGEMENT PRACTICES PLAN (SHEET 27) FOR SILT FENCE LOCATIONS.
3. SEE INTERTEK/PSI SOIL AND DEWATERING MANAGEMENT PLAN AND SHEET X01 FOR ADDITIONAL INFORMATION ON SOIL MANAGEMENT DURING CONSTRUCTION.

PROPOSED POWER BOX

PROPOSED SWALE FLOWLINE

PROPOSED PLAY
(GRASS) FIELD

PROPOSED POWER BOX

SEE SHEET 7

SEE SHEET 6

SEE SHEET 9

SEE SHEET 8

REV NO.	REVISION	DATE	DRAWN BY / EMP. NO.	CHECKED BY / EMP. NO.
6	REV NOTES	4/17/23	RQS/89561	ET
5	REV SR FNC LBL, NOTES.	12/14/22	RQS/89561	ET
4	REVISION TO INTERNAL LIMIT OF CONSTRUCTION PER MC	4/14/21	RQS/89561	EA
3	REVISION TO RESTROOM, PAVILION, AND PLAYGROUND PER MC	1/6/21	KG/101511	RQS/89561
2	REVISE TEXT FOR PLAYGROUND AND PLAY (GRASS) FIELD	7/10/19	KG/101511	RQS/89561
1	REVISE FENCE & TRAIL LOCATION	9/05/18	RB/115155	RQS/89561

ACTIVITY	INITIALS/EMP. NO.	DATE
DESIGNED BY:		
DRAWN BY:		
CHECKED BY:		
CONTRACT ADMIN. BY:		
WM APPROVED BY:		

Stantec
6900 Professional Parkway East, Sarasota, FL34240-8414
Phone 941-907-6900 • Fax 941-907-6910
Certificate of Authorization #27013 • www.stantec.com

CLIENT: MANATEE BOARD OF COUNTY COMMISSIONERS

PROJECT: WASHINGTON PARK PRESERVE PHASE I

DATE: JULY 2019

HORIZONTAL SCALE:

VERTICAL SCALE:

SEC: 12 TWP: 34S RGE: 17E

TITLE: SITE PLAN

CROSS REFERENCE FILE NO.:

PROJECT NUMBER: 177310895

R. QUINCE SELLERS, P.E.
FLORIDA LICENSE NO. 49374
INDEX NUMBER:

SHEET NUMBER: 7 OF 28

Saved: 4/17/2023 6:46 PM QSELLERS | Plotted: 4/18/2023 8:41:10 AM QSELLERS | V:\1773\active\177310895\05_report_deliv\drawing_design\rod_fig\sheet\177310895-01C-004.dwg

SEE SHEET 6

SEE SHEET 8

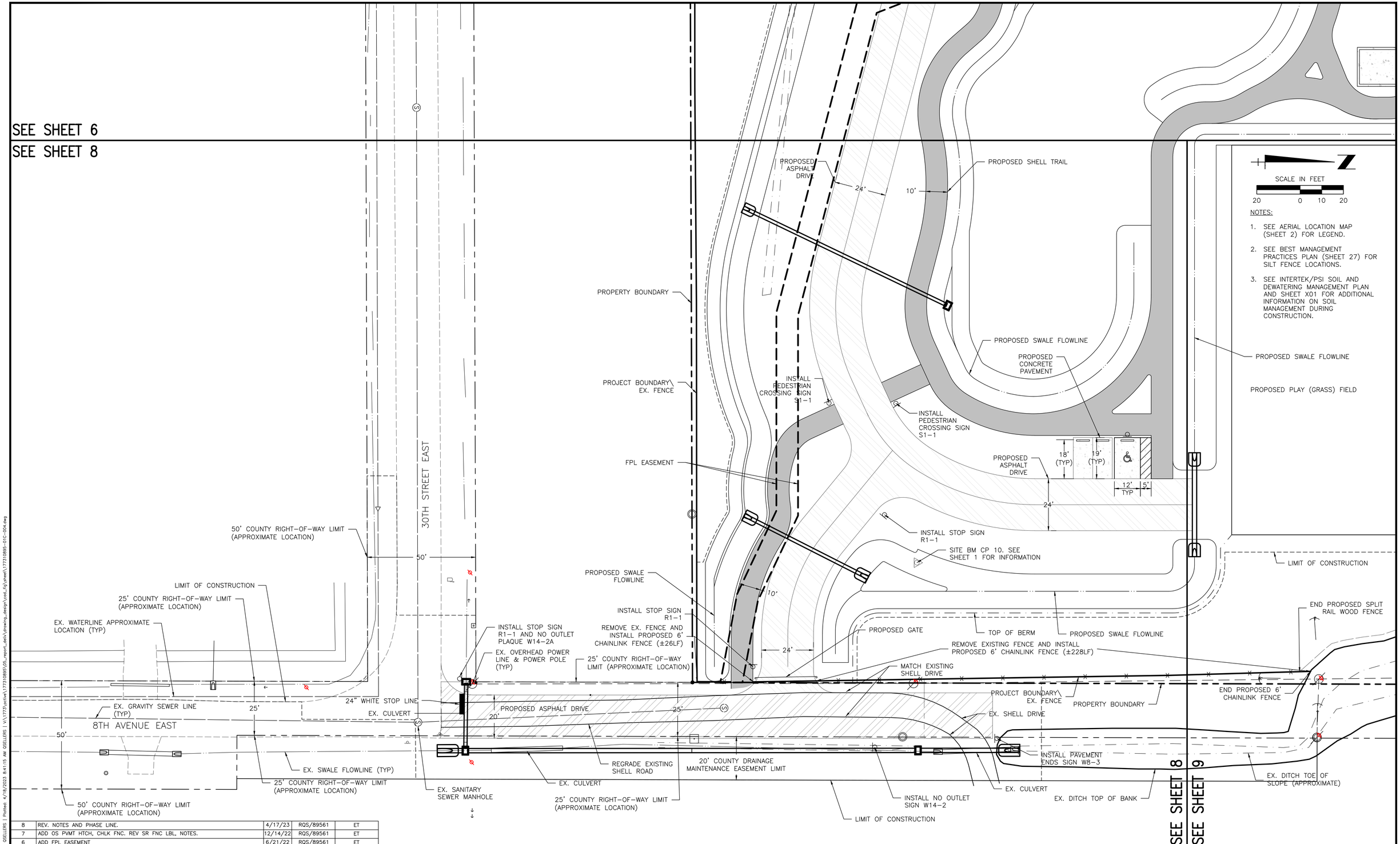

REV NO.	REVISION	DATE	DRAWN BY / EMP. NO.	CHECKED BY / EMP. NO.
8	REV. NOTES AND PHASE LINE.	4/17/23	RQS/89561	ET
7	ADD OS PVMT HTCH, CHLK FNC. REV SR FNC LBL, NOTES.	12/14/22	RQS/89561	ET
6	ADD FPL EASEMENT	6/21/22	RQS/89561	ET
5	REVISION TO INTERNAL LIMIT OF CONSTRUCTION PER MC	4/14/21	RQS/89561	EA
4	REVISED RESTROOM, PAVILION, LIMIT OF CONSTRUCTION AND PLAYGROUND PER MC	1/25/21	KG/101511	RQS/89561
3	REVISE TEXT FOR PLAY (GRASS) FIELD	7/10/19	KG/101511	RQS/89561
2	ADD PROPOSED ASPHALT DRIVE, STOP LINE, PAVEMENT ENDS SIGN	10/18/18	KG/101511	RQS/89561
1	ADD STREET NAME, ROW DIMENSION, DRAINAGE EASEMENT, MES	8/27/18	KG/101511	RQS/89561

	INITIALS/EMP. NO.	DATE
ACTIVITY		
DESIGNED BY:		
DRAWN BY:		
CHECKED BY:		
CONTRACT ADMIN. BY:		
WM APPROVED BY:		

Stantec
6900 Professional Parkway East, Sarasota, FL34240-8414
Phone 941-907-6900 • Fax 941-907-6910
Certificate of Authorization #27013 • www.stantec.com

CLIENT: MANATEE BOARD OF COUNTY COMMISSIONERS

PROJECT: WASHINGTON PARK PRESERVE PHASE I

DATE: JULY 2019

HORIZONTAL SCALE:

VERTICAL SCALE:

SEC: 12 TWP: 34S RGE: 17E

TITLE: SITE PLAN

CROSS REFERENCE FILE NO.:

PROJECT NUMBER: 177310895

R. QUINCE SELLERS, P.E.
FLORIDA LICENSE NO. 49374

INDEX NUMBER:

SHEET NUMBER: 8 OF 28

Saved: 4/17/2023 6:46 PM QSELLERS | Plotted: 4/18/2023 8:41:15 AM QSELLERS | V:\1773\active\177310895\05_report_deliv\drawing_design\civil_fig\sheet\177310895-01C-004.dwg

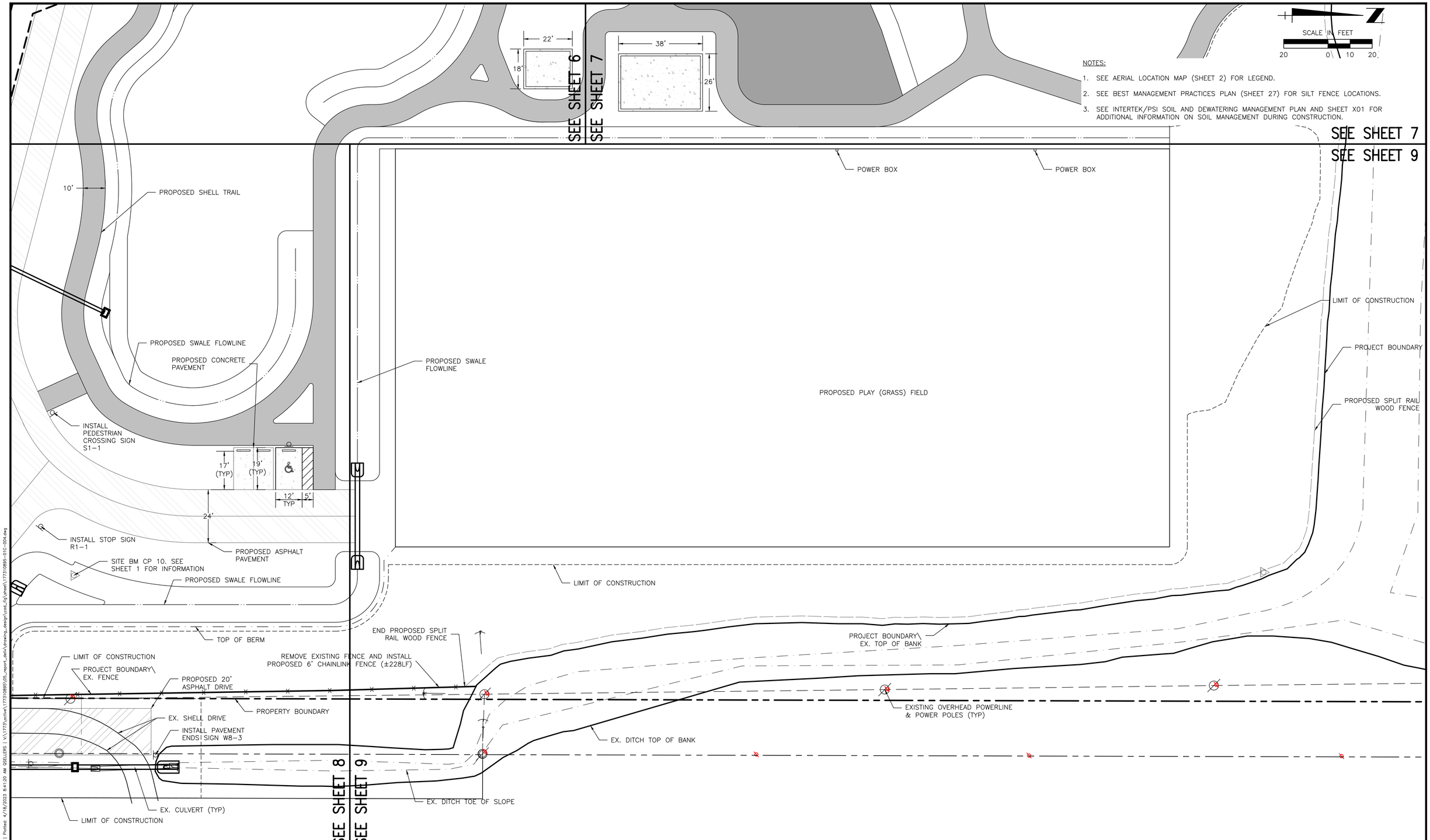

NOTES:

1. SEE AERIAL LOCATION MAP (SHEET 2) FOR LEGEND.
2. SEE BEST MANAGEMENT PRACTICES PLAN (SHEET 27) FOR SILT FENCE LOCATIONS.
3. SEE INTERTEK/PSI SOIL AND DEWATERING MANAGEMENT PLAN AND SHEET X01 FOR ADDITIONAL INFORMATION ON SOIL MANAGEMENT DURING CONSTRUCTION.

△REV NO.	REVISION	DATE	DRAWN BY / EMP. NO.	CHECKED BY / EMP. NO.
7	REV. NOTES AND PHASE LINE.	12/14/22	RQS/89561	ET
6	ADD OS PVMT HTCH, CHLK FNC. REV SR FNC LBL, NOTES.	12/14/22	RQS/89561	ET
5	REVISION TO INTERNAL LIMIT OF CONSTRUCTION PER MC	4/14/21	RQS/89561	EA
4	REVISED RESTROOM, PAVILION, LIMIT OF CONSTRUCTION AND PLAYGROUND PER MC	1/25/21	KG/101511	RQS/89561
3	REVISE TEXT FOR PLAY (GRASS) FIELD	7/10/19	KG/101511	RQS/89561
2	ADD PROPOSED ASPHALT DRIVE	10/18/18	KG/101511	RQS/89561
1	REVISE FENCE SCALE, ADD CULVERT & MES	9/05/18	RB/115155	RQS/89561

ACTIVITY	INITIALS/EMP. NO.	DATE
DESIGNED BY:		
DRAWN BY:		
CHECKED BY:		
CONTRACT ADMIN. BY:		
WM APPROVED BY:		

Stantec
6900 Professional Parkway East, Sarasota, FL34240-8414
Phone 941-907-6900 • Fax 941-907-6910
Certificate of Authorization #27013 • www.stantec.com

CLIENT: MANATEE BOARD OF COUNTY COMMISSIONERS

PROJECT: WASHINGTON PARK PRESERVE PHASE I

DATE: JULY 2019

HORIZONTAL SCALE:

VERTICAL SCALE:

SEC: 12 TWP: 34S RGE: 17E

CROSS REFERENCE FILE NO.:

TITLE: SITE PLAN

PROJECT NUMBER: 177310895

R. QUINCE SELLERS, P.E.
FLORIDA LICENSE NO. 49374

INDEX NUMBER:

SHEET NUMBER: 9 OF 28

Saved: 4/17/2023 6:46 PM QSELLERS | Plotted: 4/18/2023 8:41:20 AM QSELLERS | V:\1773\active\177310895\05_report_deli\drawing_design\cad_fg\sheet\177310895-01C-004.dwg

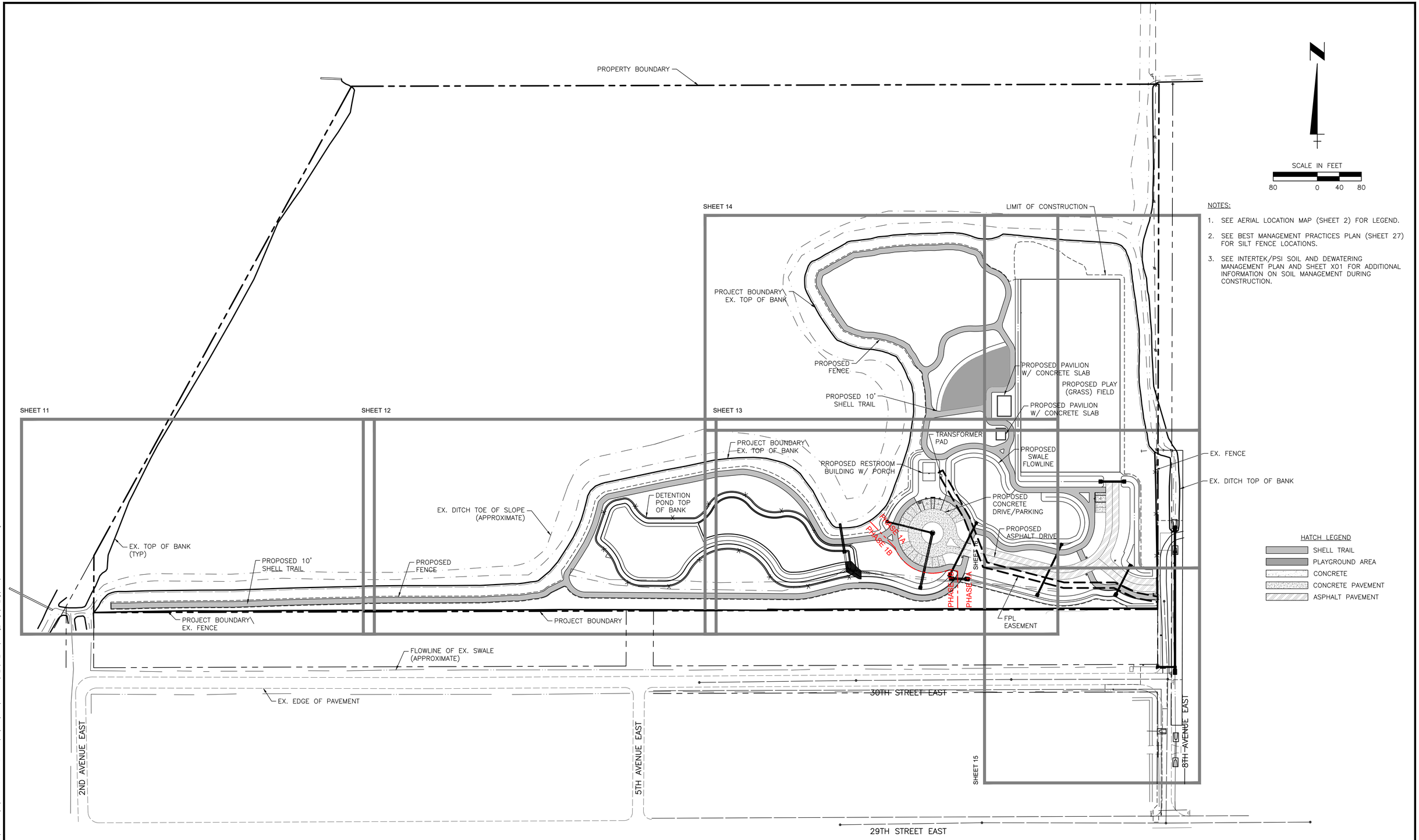

NOTES:

1. SEE AERIAL LOCATION MAP (SHEET 2) FOR LEGEND.
2. SEE BEST MANAGEMENT PRACTICES PLAN (SHEET 27) FOR SILT FENCE LOCATIONS.
3. SEE INTERTEK/PSI SOIL AND DEWATERING MANAGEMENT PLAN AND SHEET X01 FOR ADDITIONAL INFORMATION ON SOIL MANAGEMENT DURING CONSTRUCTION.

△REV NO.	REVISION	DATE	DRAWN BY / EMP. NO.	CHECKED BY / EMP. NO.
7	REV NOTES, PHASE LINE.	4/17/23	RQS/89561	ET
6	REV NOTES, HTCH LGND, CONC PVMT, ASPH PVMT. ADD PHASING, FENCE.	12/14/22	RQS/89561	ET
5	REV RR/SW LOCATION, ADD TRANSFORMER PAD, FPL EASEMENT	6/21/22	RQS/89561	ET
4	REVISION TO INTERNAL LIMIT OF CONSTRUCTION PER MC	4/14/21	RQS/89561	EA
3	REVISION TO RESTROOM, PAVILION, AND PLAYGROUND PER MC	1/6/21	KG/101511	RQS/89561
2	REVISE TEXT FOR PLAY (GRASS) FIELD	7/10/19	KG/101511	RQS/89561
1	REVISE TRAIL & FENCE LOCATION, ADD MES & 8TH AVE PIPE	9/05/18	RB/115155	RQS/89561

ACTIVITY	INITIALS/EMP. NO.	DATE
DESIGNED BY:		
DRAWN BY:		
CHECKED BY:		
CONTRACT ADMIN. BY:		
WM APPROVED BY:		

Stantec
6500 Professional Parkway East, Sarasota, FL34240-8414
Phone 941-907-6900 ● Fax 941-907-6910
Certificate of Authorization #27013 ● www.stantec.com

CLIENT: MANATEE BOARD OF COUNTY COMMISSIONERS

PROJECT: WASHINGTON PARK PRESERVE PHASE I

DATE: JULY 2019
HORIZONTAL SCALE:
VERTICAL SCALE:
SEC: 12 TWP: 34S RGE: 17E
CROSS REFERENCE FILE NO.:

TITLE: GRADING AND DRAINAGE PLAN KEY SHEET

PROJECT NUMBER: 177310895

R. QUINCE SELLERS, P.E.
FLORIDA LICENSE NO. 49374

INDEX NUMBER:

SHEET NUMBER: 10 OF 28

N

SCALE IN FEET

20 0 10 20

NOTES:

1. SEE AERIAL LOCATION MAP (SHEET 2) FOR LEGEND.
2. SEE BEST MANAGEMENT PRACTICES PLAN (SHEET 27) FOR SILT FENCE LOCATIONS.
3. SEE INTERTEK/PSI SOIL AND DEWATERING MANAGEMENT PLAN AND SHEET X01 FOR ADDITIONAL INFORMATION ON SOIL MANAGEMENT DURING CONSTRUCTION.

REV NO.	REVISION	DATE	DRAWN BY / EMP. NO.	CHECKED BY / EMP. NO.
3	REV NOTES	4/17/23	RQS/89561	ET
2	REV NOTES PER SMP UPDATE	12/14/22	RQS/89561	ET
1	REVISE TRAIL & FENCE LOCATIONS, GRADES	9/05/18	RB/115155	RQS/89561

ACTIVITY	INITIALS/EMP. NO.	DATE
DESIGNED BY:		
DRAWN BY:		
CHECKED BY:		
CONTRACT ADMIN. BY:		
WM APPROVED BY:		

Stantec
6900 Professional Parkway East, Sarasota, FL34240-8414
Phone 941-907-6900 • Fax 941-907-6910
Certificate of Authorization #27013 • www.stantec.com

CLIENT: MANATEE BOARD OF COUNTY COMMISSIONERS

PROJECT: WASHINGTON PARK PRESERVE PHASE I

DATE: JULY 2019

HORIZONTAL SCALE:

VERTICAL SCALE:

SEC: 12 TWP: 34S RGE: 17E

CROSS REFERENCE FILE NO.:

TITLE: GRADING AND DRAINAGE PLAN

PROJECT NUMBER: 177310895

R. QUINCE SELLERS, P.E.
FLORIDA LICENSE NO. 49374

INDEX NUMBER:

SHEET NUMBER: 11 OF 28

NOTES:

1. SEE AERIAL LOCATION MAP (SHEET 2) FOR LEGEND.
2. SEE BEST MANAGEMENT PRACTICES PLAN (SHEET 27) FOR SILT FENCE LOCATIONS.
3. SEE INTERTEK/PSI SOIL AND DEWATERING MANAGEMENT PLAN AND SHEET X01 FOR ADDITIONAL INFORMATION ON SOIL MANAGEMENT DURING CONSTRUCTION.

SCALE IN FEET
20 0 10 20

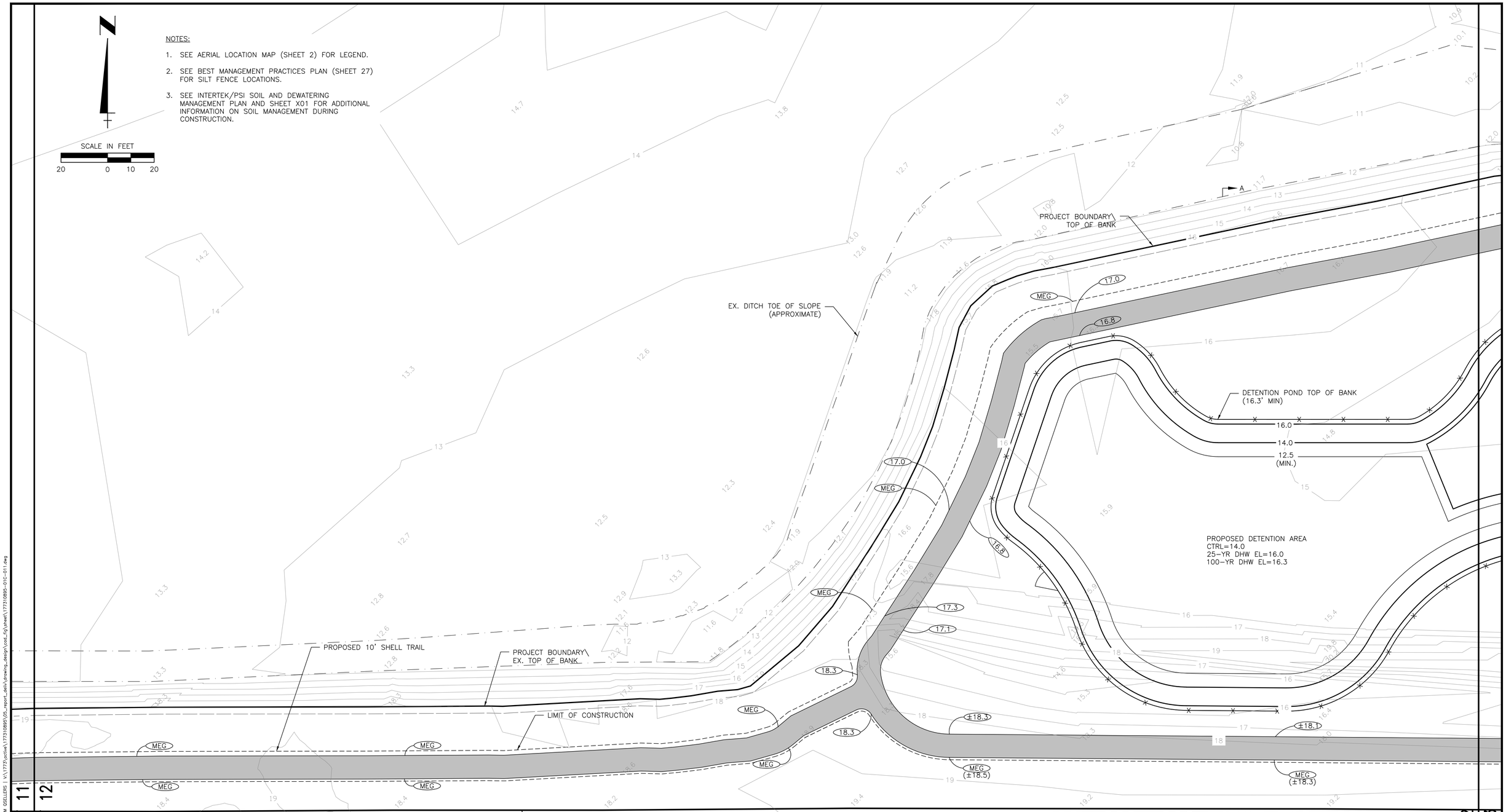

REV NO.	REVISION	DATE	DRAWN BY / EMP. NO.	CHECKED BY / EMP. NO.
8	REV NOTES	3/17/23	RQS/89561	ET
7	REV NOTES PER SMP UPDATE.	12/14/22	RQS/89561	ET
6	REV A-A PER SMP UPDATE.	11/9/22	RQS/89561	ET
5	REV RR/SW LOCATION, ADD TRANSFORMER PAD, FPL EASEMENT	6/21/22	RQS/89561	ET
4	REV SEC A-A, B-B, E-E, H-H PER SMP	4/4/22	RQS/89561	EA
3	REVISE POND CONTOURS	7/14/20	KG/101511	RQS/89561
2	ADD POND 10.5 & 12.5 CONTOURS	7/13/20	KG/101511	RQS/89561
1	REVISE TRAIL & FENCE LOCATIONS, GRADES, ADD POND WATER LEVELS	8/27/18	KG/101511	RQS/89561

ACTIVITY	INITIALS/EMP. NO.	DATE
DESIGNED BY:		
DRAWN BY:		
CHECKED BY:		
CONTRACT ADMIN. BY:		
WM APPROVED BY:		

Stantec
6900 Professional Parkway East, Sarasota, FL34240-8414
Phone 941-907-6900 • Fax 941-907-6910
Certificate of Authorization #27013 • www.stantec.com

CLIENT: MANATEE BOARD OF COUNTY COMMISSIONERS

PROJECT: WASHINGTON PARK PRESERVE PHASE I

DATE: JULY 2019
HORIZONTAL SCALE:
VERTICAL SCALE:
SEC: 12 TWP: 34S RGE: 17E

TITLE: GRADING AND DRAINAGE PLAN

CROSS REFERENCE FILE NO.:
PROJECT NUMBER: 177310895

R. QUINCE SELLERS, P.E.
FLORIDA LICENSE NO. 49374
INDEX NUMBER:
SHEET NUMBER: 12 OF 28

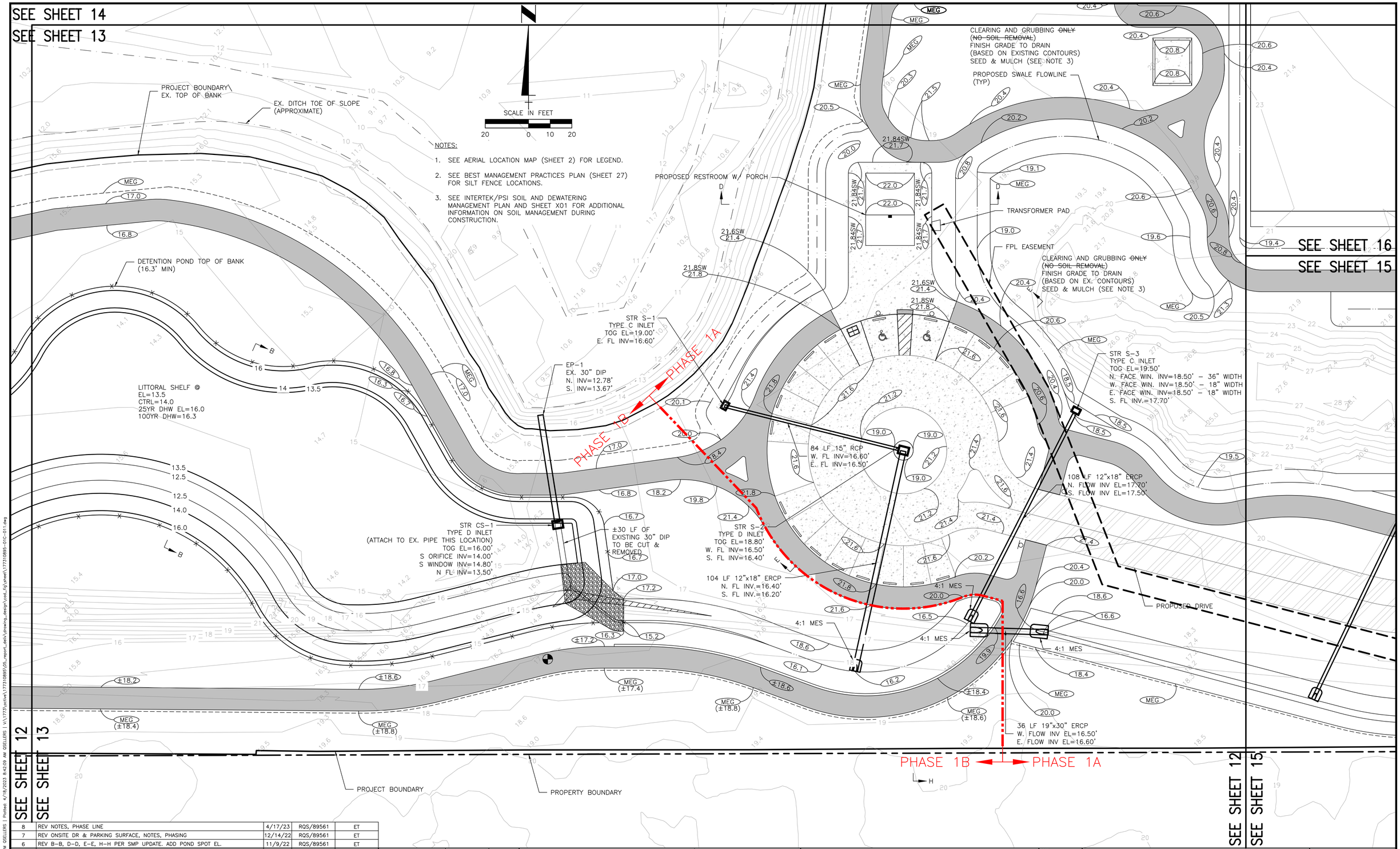

△REV NO.	REVISION	DATE	DRAWN BY / EMP. NO.	CHECKED BY / EMP. NO.
8	REV NOTES, PHASE LINE	4/17/23	RQS/89561	ET
7	REV ONSITE DR & PARKING SURFACE, NOTES, PHASING	12/14/22	RQS/89561	ET
6	REV B-B, D-D, E-E, H-H PER SMP UPDATE. ADD POND SPOT EL.	11/9/22	RQS/89561	ET
5	REV RR/SW LOCATION, ADD TRANSFORMER PAD, FPL EASEMENT	6/21/22	RQS/89561	ET
4	REV SEC A-A, B-B, E-E, H-H PER SMP	4/4/22	RQS/89561	EA
3	REVISION TO INTERNAL LIMIT OF CONSTRUCTION PER MC	4/14/21	RQS/89561	EA
2	REVISION TO RESTROOM, PAVILION, AND PLAYGROUND PER MC	1/6/21	KG/101511	RQS/89561
1	REVISE TRAIL & FENCE LOCATIONS, GRADES, ADD 4:1 MES, SECTION H-H	8/27/18	KG/101511	RQS/89561

ACTIVITY	INITIALS/EMP. NO.	DATE
DESIGNED BY:		
DRAWN BY:		
CHECKED BY:		
CONTRACT ADMIN. BY:		
WM APPROVED BY:		

Stantec
6500 Professional Parkway East, Sarasota, FL34240-8414
Phone 941-907-6900 ▲ Fax 941-907-6910
Certificate of Authorization #27013 ▲ www.stantec.com

CLIENT: MANATEE BOARD OF COUNTY COMMISSIONERS

PROJECT: WASHINGTON PARK PRESERVE PHASE I

DATE: JULY 2019
HORIZONTAL SCALE:
VERTICAL SCALE:
SEC: 12 TWP: 34S RGE: 17E
CROSS REFERENCE FILE NO.:
PROJECT NUMBER: 177310895

TITLE: GRADING AND DRAINAGE PLAN

R. QUINCE SELLERS, P.E.
FLORIDA LICENSE NO. 49374
INDEX NUMBER:
SHEET NUMBER: 13 OF 28

Saved: 4/17/2023 7:07 PM QSELLERS | Plotted: 4/18/2023 8:42:09 AM QSELLERS | V:\1773\active\177310895\05_report_desk\drawing_design\cost_fig\sheet\177310895-01C-011.dwg

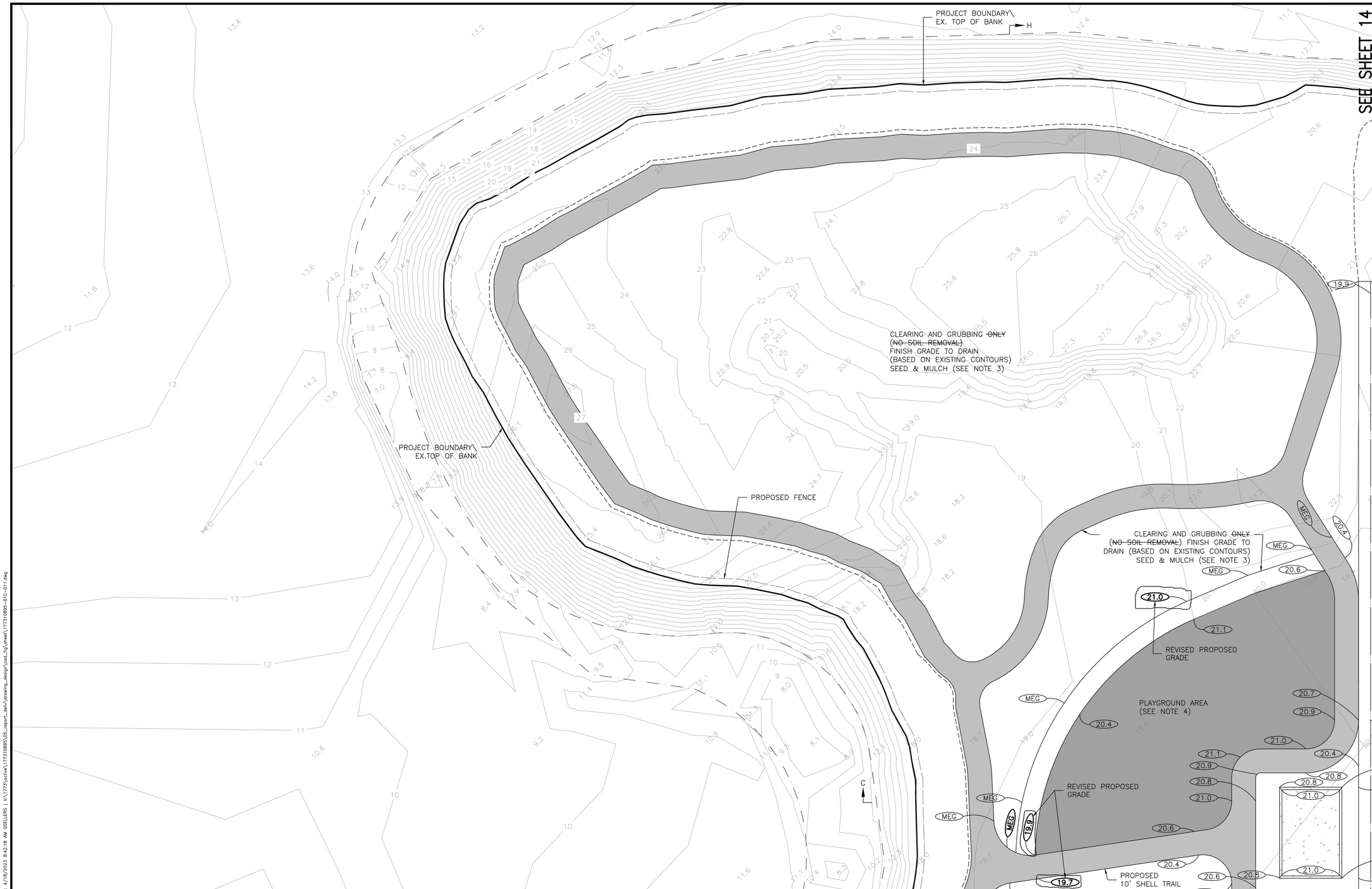

SCALE IN FEET

20 0 10 20

NOTES:

1. SEE AERIAL LOCATION MAP (SHEET 2) FOR LEGEND.
2. SEE BEST MANAGEMENT PRACTICES PLAN (SHEET 27) FOR SILT FENCE LOCATIONS.
3. THE PLAYGROUND AREA SHALL BE CLEARED, THEN PERFORM 2' OVERCUT BELOW FINISHED GRADE & REPLACE WITH 2' CLEAN FILL COMPACTED TO 95% MAX DENSITY (AASHTO T-180), AND FINISHED GRADED.
3. SEE INTERTEK/PSI SOIL AND DEWATERING MANAGEMENT PLAN AND SHEET X01 FOR ADDITIONAL INFORMATION ON SOIL MANAGEMENT DURING CONSTRUCTION.

REV NO.	REVISION	DATE	DRAWN BY / EMP. NO.	CHECKED BY / EMP. NO.
8	REV NOTES	4/17/23	RQS/89561	ET
7	REV NOTES	12/14/22	RQS/89561	ET
6	REV SEC C-C, H-H & PLAYGROUND NOTES PER UPDATED SMP	11/9/22	RQS/89561	ET
5	REV SEC A-A, B-B, E-E, H-H & PLAYGROUND REV GRADE PTS PER SMP	4/4/22	RQS/89561	EA
4	REVISION TO INTERNAL LIMIT OF CONSTRUCTION PER MC	4/14/21	RQS/89561	EA
3	REVISION TO RESTROOM, PAVILION, AND PLAYGROUND PER MC	1/6/21	KG/101511	RQS/89561
2	REVISE TEXT FOR PLAYGROUND AND NOTE 3	7/10/19	KG/101511	RQS/89561
1	ADD SECTION H-H, REVISE TRAIL & FENCE LOCATIONS	8/27/18	KG/101511	RQS/89561

ACTIVITY	INITIALS/EMP. NO.	DATE
DESIGNED BY:		
DRAWN BY:		
CHECKED BY:		
CONTRACT ADMIN. BY:		
WM APPROVED BY:		

Stantec
6900 Professional Parkway East, Sarasota, FL34240-8414
Phone 941-907-6900 • Fax 941-907-6910
Certificate of Authorization #27013 • www.stantec.com

CLIENT: MANATEE BOARD OF COUNTY COMMISSIONERS

PROJECT: WASHINGTON PARK PRESERVE PHASE I

DATE: JULY 2019

HORIZONTAL SCALE:

VERTICAL SCALE:

SEC: 12 TWP: 34S RGE: 17E

TITLE: GRADING AND DRAINAGE PLAN

CROSS REFERENCE FILE NO.:

PROJECT NUMBER: 177310895

R. QUINCE SELLERS, P.E.
FLORIDA LICENSE NO. 49374

INDEX NUMBER:

SHEET NUMBER: 14 OF 28

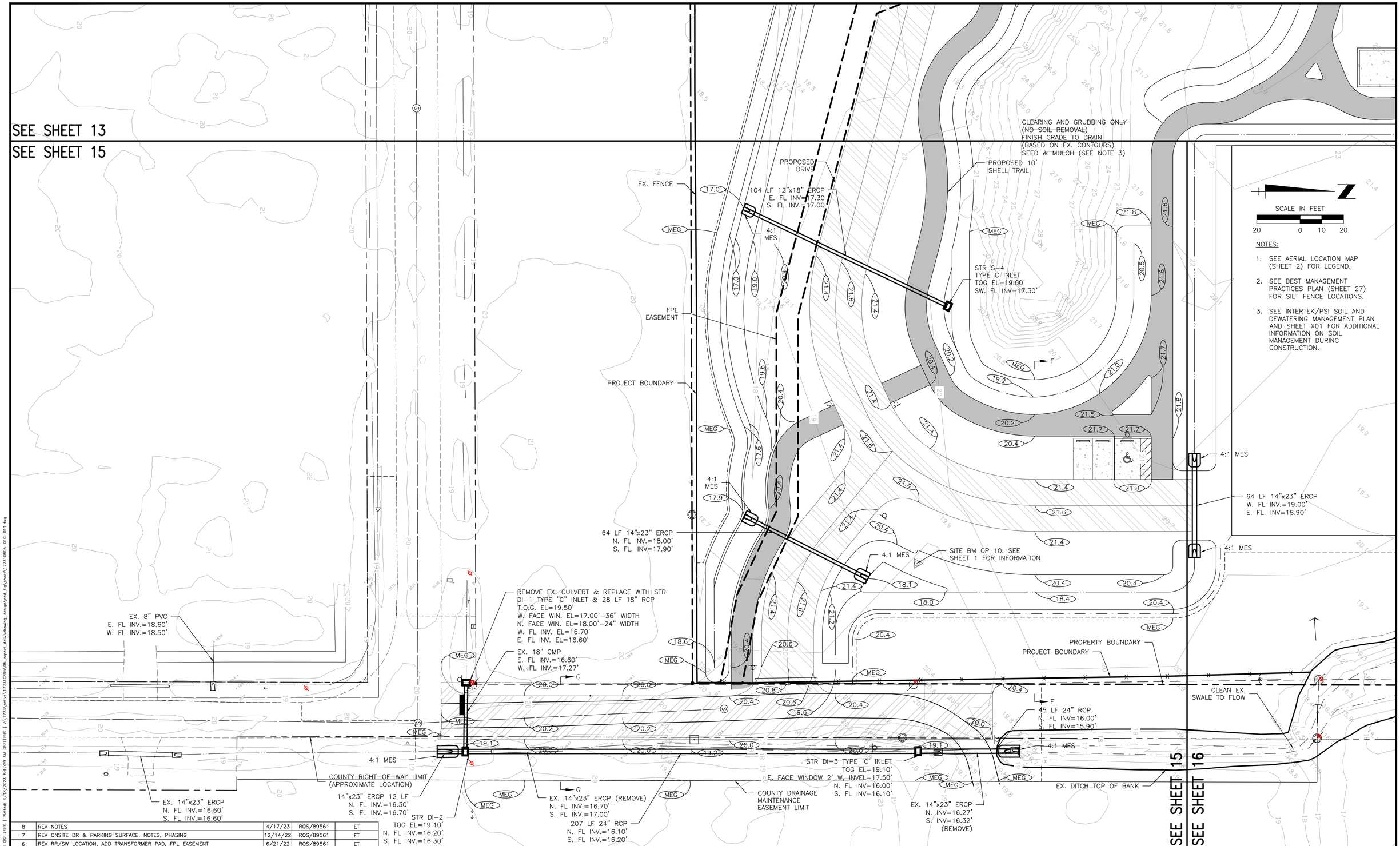

△REV NO.	REVISION	DATE	DRAWN BY / EMP. NO.	CHECKED BY / EMP. NO.
8	REV NOTES	4/17/23	RQS/89561	ET
7	REV ONSITE DR & PARKING SURFACE, NOTES, PHASING	12/14/22	RQS/89561	ET
6	REV RR/SW LOCATION, ADD TRANSFORMER PAD, FPL EASEMENT	6/21/22	RQS/89561	ET
5	REV SEC A-A, B-B, E-E, H-H PER SMP	4/4/22	RQS/89561	EA
4	REVISION TO INTERNAL LIMIT OF CONSTRUCTION PER MC	4/14/21	RQS/89561	EA
3	REVISION TO RESTROOM, PAVILION, AND PLAYGROUND PER MC	1/6/21	KG/101511	RQS/89561
2	UPDATE GRADE ELEVATIONS ASPHALT DRIVE	10/18/18	KG/101511	RQS/89561
1	ADD MES, DRAIN ESMNT, 24" RCP, DI-2, DI-3, REV SHELL DRIVE	8/27/18	RB/115155	RQS/89561

ACTIVITY	INITIALS/EMP. NO.	DATE
DESIGNED BY:		
DRAWN BY:		
CHECKED BY:		
CONTRACT ADMIN. BY:		
WM APPROVED BY:		

Stantec
6500 Professional Parkway East, Sarasota, FL34240-8414
Phone 941-907-6900 ♦ Fax 941-907-6910
Certificate of Authorization #27013 ♦ www.stantec.com

CLIENT: MANATEE BOARD OF COUNTY COMMISSIONERS

PROJECT: WASHINGTON PARK PRESERVE PHASE I

DATE: JULY 2019
HORIZONTAL SCALE:
VERTICAL SCALE:
SEC: 12 TWP: 34S RGE: 17E
CROSS REFERENCE FILE NO.:
PROJECT NUMBER: 177310895

TITLE: GRADING AND DRAINAGE PLAN

R. QUINCE SELLERS, P.E.
FLORIDA LICENSE NO. 49374
INDEX NUMBER:
SHEET NUMBER: 15 OF 28

Saved: 4/17/2023 7:07 PM QSELLERS | Plotted: 4/18/2023 8:42:29 AM QSELLERS | V:\1773\active\177310895\05_report_dwlk\drawing_design\cost_fig\sheet\177310895-01C-011.dwg

NOTES:

1. SEE AERIAL LOCATION MAP (SHEET 2) FOR LEGEND.
2. SEE BEST MANAGEMENT PRACTICES PLAN (SHEET 27) FOR SILT FENCE LOCATIONS.
3. SEE INTERTEK/PSI SOIL AND DEWATERING MANAGEMENT PLAN AND SHEET X01 FOR ADDITIONAL INFORMATION ON SOIL MANAGEMENT DURING CONSTRUCTION.

SCALE IN FEET
20 0 10 20

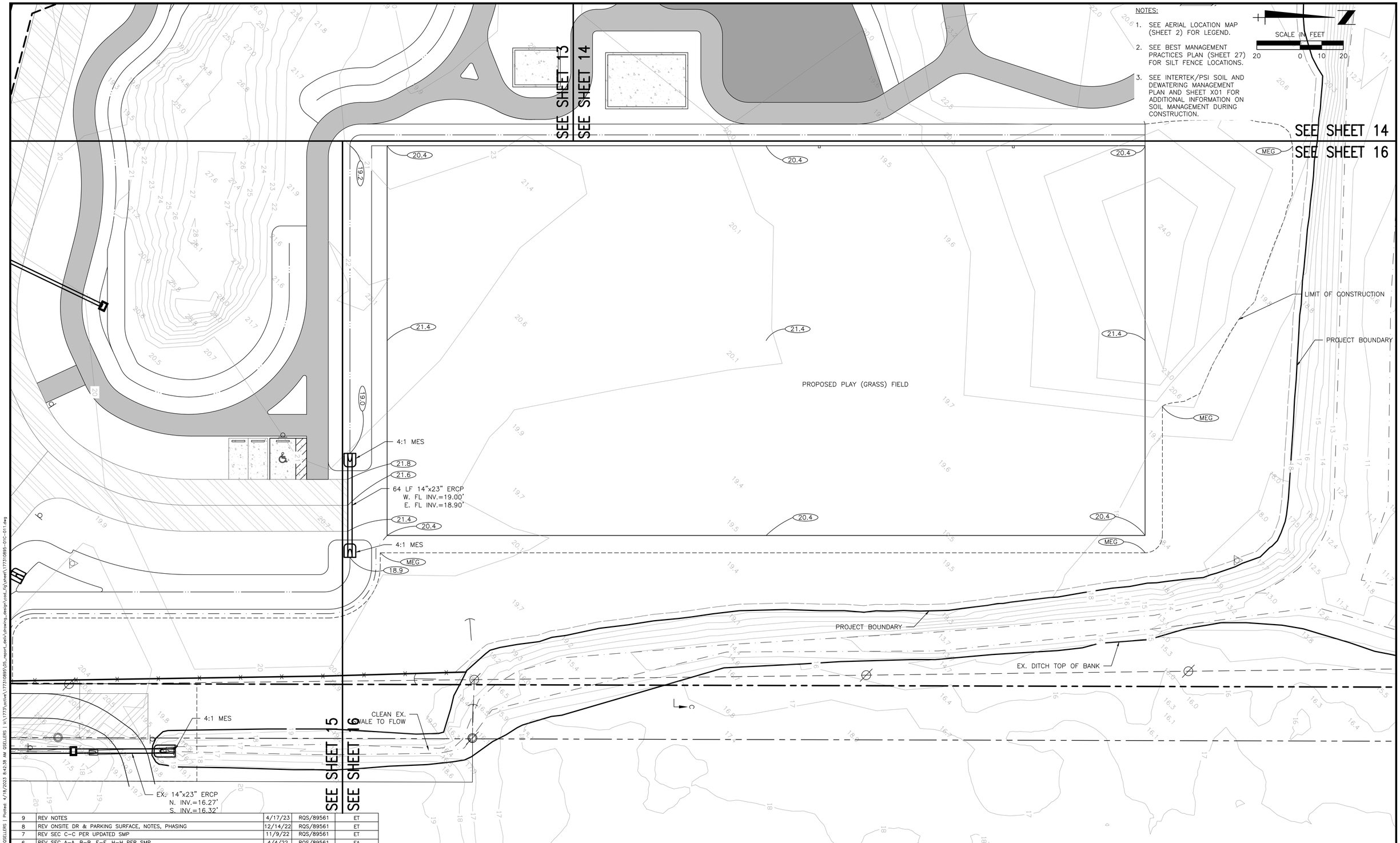

REV NO.	REVISION	DATE	DRAWN BY / EMP. NO.	CHECKED BY / EMP. NO.
9	REV NOTES	4/17/23	RQS/89561	ET
8	REV ONSITE DR & PARKING SURFACE, NOTES, PHASING	12/14/22	RQS/89561	ET
7	REV SEC C-C PER UPDATED SMP	11/9/22	RQS/89561	ET
6	REV SEC A-A, B-B, E-E, H-H PER SMP	4/4/22	RQS/89561	EA
5	REVISION TO INTERNAL LIMIT OF CONSTRUCTION PER MC	4/14/21	RQS/89561	EA
4	REVISION TO RESTROOM, PAVILION, AND PLAYGROUND PER MC	1/6/21	KG/101511	RQS/89561
3	REVISE TEXT PLAY (GRASS) FIELD AND ADD NOTE 3	7/10/19	KG/101511	RQS/89561
2	REVISE FENCE LOCATION	10/18/18	KG/101511	RQS/89561
1	ADD 4:1 MES, ADD CLEAN SWALE NOTE	8/27/18	KG/101511	RQS/89561

ACTIVITY	INITIALS/EMP. NO.	DATE
DESIGNED BY:		
DRAWN BY:		
CHECKED BY:		
CONTRACT ADMIN. BY:		
WM APPROVED BY:		

Stantec
6900 Professional Parkway East, Sarasota, FL34240-8414
Phone 941-907-6900 • Fax 941-907-6910
Certificate of Authorization #27013 • www.stantec.com

CLIENT: MANATEE BOARD OF COUNTY COMMISSIONERS

PROJECT: WASHINGTON PARK PRESERVE PHASE I

DATE: JULY 2019
HORIZONTAL SCALE:
VERTICAL SCALE:
SEC: 12 TWP: 34S RGE: 17E

TITLE: GRADING AND DRAINAGE PLAN

CROSS REFERENCE FILE NO.:

PROJECT NUMBER: 177310895

R. QUINCE SELLERS, P.E.
FLORIDA LICENSE NO. 49374
INDEX NUMBER:

SHEET NUMBER: 16 OF 28

UTILITY GENERAL NOTES:

1. MANATEE COUNTY PUBLIC WORKS UTILITY STANDARDS ARE THE MINIMUM ALLOWABLE WATER AND/OR WASTEWATER CONSTRUCTION STANDARDS. WHERE ANY NOTE OR DETAIL ON THESE PLANS CONFLICT WITH THE MANATEE COUNTY PUBLIC WORKS UTILITY STANDARDS THE MORE STRINGENT INTERPRETATION, AS DETERMINED BY THE COUNTY INFRASTRUCTURE INSPECTOR, SHALL BE APPLIED.

2. THE CONTRACTOR SHALL INVESTIGATE AND VERIFY OR HAVE VERIFIED THE LOCATION OF EXISTING UTILITIES AND ANY OTHER SUBSURFACE FACILITIES BEFORE STARTING WORK. HE SHALL BE LIABLE FOR ANY EXPENSE RESULTING FROM DAMAGE TO SAME. ANY CONFLICTS WITH EXISTING UTILITIES SHALL BE BROUGHT TO THE ATTENTION OF THE ENGINEER AS SOON AS POSSIBLE.

WATER DISTRIBUTION GENERAL NOTES:

1. IT SHALL BE THE RESPONSIBILITY OF THE CONTRACTOR TO NOTIFY THE COUNTY, AND THE ENGINEER TWO (2) WORKING DAYS PRIOR TO ANY WORK AT SITE & THREE (3) WORKING DAYS PRIOR TO ANY TESTING. WATER MAINS TIE–INS REQUIRING WATER SERVICE TO BE SHUT OFF SHALL BE MADE WHEN REQUIRED BY MANATEE COUNTY PUBLIC WORKS DEPARTMENT.

2. WATER MAIN INSTALLATION SHALL BE CONSTRUCTED TO THE ELEVATIONS AND DEPTHS AS INDICATED ON THE PLANS WITHIN 0.25 FT. COST TO RELAY MAIN, IF NECESSARY, SHALL BE BORNE BY THE CONTRACTOR.

3. WHERE THE WATER MAIN EXCEEDS THE PIPE MANUFACTURER'S RECOMMENDATIONS FOR MAXIMUM JOINT DEFLECTION, THE CONTRACTOR SHALL FURNISH AND INSTALL DUCTILE IRON FITTINGS.

4. THE CONTRACTOR SHALL PROVIDE AND UTILIZE A METERED JUMPER ASSEMBLY BETWEEN THE EXISTING POTABLE WATER SOURCE PIPING AND THE NEW WATER MAIN IN ORDER TO PROVIDE BACKFLOW PREVENTION WHILE FILLING AND FLUSHING THE NEW WATER MAIN. FINAL TIE–IN SHALL BE COMPLETED ONLY AFTER THE NEW SYSTEM HAS BEEN FLUSHED CLEAN, PRESSURE TESTED, DISINFECTED, BACTERIOLOGICALLY CLEARED, CERTIFIED COMPLETE BY THE ENGINEER, AND A RELEASE IS OBTAINED FROM THE HEALTH DEPARTMENT. ENGINEER'S REPRESENTATIVE TO BE PRESENT AT FINAL TIE–IN. THE LENGTH OF PIPE REQUIRED FOR FINAL TIE–IN SHALL BE LIMITED TO LESS THAN 20 FEET. ALL WORK SHALL BE COMPLETED IN ACCORDANCE WITH HEALTH DEPARTMENT AND LOCAL GOVERNMENT RULES AND REGULATIONS.

WASTEWATER GENERAL NOTES:

1. ELEVATIONS SHOWN ON THE PLANS FOR FLOWLINES OF PROPOSED WASTEWATER MAINS SHALL BE ADHERED TO. IN MOST CASES THE DESIGN GRADES ARE CRITICAL AND ADJUSTMENTS CAUSED BY MISALIGNMENT OR IMPROPER GRADES ARE IMPRACTICAL. COST TO RELAY MAIN, IF NECESSARY, SHALL BE BORNE BY THE CONTRACTOR.

SANITARY SEWER SERVICE GENERAL NOTES:

1. METALLIC IDENTIFICATION TAPE SHALL EXTEND FROM WYE CONNECTION TO THE END OF THE SERVICE EIGHTEEN INCHES (18") BELOW FINISHED GRADE.

2. CLEANOUTS ARE REQUIRED ON ALL SERVICES AND AS SHOWN ON THE PLAN.

3. CLEAN–OUTS SHALL BE ADJUSTED TO CONFORM WITH FINISHED SURFACES. ALL ADJUSTMENTS SHALL BE INCLUDED IN THE PRICE BID. NO ADDITIONAL COMPENSATION SHALL BE MADE BY THE OWNER.

TRENCH GENERAL NOTES:

1. WHERE WATER, RECLAIMED, SEWER MAINS, FORCEMAINS AND/OR STORM SEWERS WOULD CROSS WITH LESS THAN EIGHTEEN INCHES (18") OF VERTICAL CLEARANCE, UPON COUNTY APPROVAL, THE MAIN (WATER, RECLAIMED WATER, FORCEMAIN) MAY BE BURIED WITH LESS THAN 3 FEET OF COVER TO AVOID OBSTRUCTION OF ANOTHER PIPE, PROVIDED THAT THE MAIN IS CONSTRUCTED OF DUCTILE IRON PIPE OR ENCASED IN DUCTILE IRON OR STEEL ENCASEMENT PIPES. WRITTEN APPROVAL FROM THE COUNTY IS REQUIRED PRIOR TO CONSTRUCTION OF MAINS WITH COVER OF LESS THAN 3 FEET OR MORE THAN 6 FEET. MAINS (WATER, RECLAIMED WATER, FORCEMAIN) WITH LESS THAN 3' OF COVER WILL ALSO REQUIRE INCREASED THRUST RESTRAINT.

2. DISCHARGE FROM DEWATERING OPERATION SHALL BE DISPOSED OF IN SUCH A MANNER THAT IT SHALL NOT INTERFERE WITH THE NORMAL DRAINAGE OF THE AREA IN WHICH THE WORK IS BEING PERFORMED, CREATE A PUBLIC NUISANCE OR FORM PONDING. THE OPERATIONS SHALL NOT CAUSE INJURY TO ANY PORTION OF THE WORK COMPLETED, OR IN PROGRESS, OR TO THE SURFACE OF STREETS, OR TO PRIVATE PROPERTY.

3. THE PROPOSED DEWATERING METHOD(S) AND SCHEDULE SHALL BE COORDINATED WITH THE UTILITY AND/OR THE ENGINEER OF RECORD AND OTHER NECESSARY REGULATORY AGENCIES PRIOR TO CONSTRUCTION. ADDITIONALLY, WHERE PRIVATE PROPERTY SHALL BE INVOLVED, ADVANCE PERMISSION SHALL BE OBTAINED BY THE CONTRACTOR AND/OR DEVELOPER.

4. THE CONTRACTOR SHALL PROVIDE SOIL COMPACTION TESTING IN ACCORDANCE WITH THE PROJECT SPECIFICATIONS. IF THE SPECIFICATIONS DO NOT ADDRESS COMPACTION TESTS, THEY SHALL BE DONE IN ACCORDANCE WITH MANATEE COUNTY PUBLIC UTILITY STANDARDS, LATEST EDITION. ALL SOIL COMPACTION TESTS RESULTS SHALL BE SUBMITTED TO THE ENGINEER OF RECORD.

AS–BUILTS:

1. THE CONTRACTOR SHALL PROVIDE RECORD DRAWINGS THAT MEET OR EXCEED THE MANATEE COUNTY PUBLIC WORKS UTILITY STANDARDS, LATEST EDITION.

2. THE CONTRACTOR SHALL FURNISH "AS–BUILT" STATIONING OF SEWER WYES USING EACH DOWNSTREAM MANHOLE AS STA. 0+00.

3. TOP OF PIPE ELEVATIONS FOR ALL POTABLE WATER AND GRAVITY SEWER MAINS ARE REQUIRED EVERY ONE HUNDRED FOOT STATION AND AT EACH STRUCTURE, FITTING, AND CHANGE IN GRADE OR ALIGNMENT.

4. RECORD DRAWINGS, IF PREPARED BY THE CONTRACTOR OR CONTRACTOR'S SURVEYOR: DRAFT COPIES OF THE RECORD DRAWINGS SHALL BE SUBMITTED TO THE ENGINEER PRIOR TO FINALIZING THE DRAWINGS. ONCE ACCEPTABLE TO THE ENGINEER, THE CONTRACTOR/SURVEYOR SHALL PROVIDE 9 SETS OF SIGNED AND SEALED FINALIZED DRAWINGS FOR SUBMITTAL TO THE COUNTY. ONCE THE DRAWINGS ARE APPROVED BY THE COUNTY, CONTRACTOR/SURVEYOR IS RESPONSIBLE TO PROVIDE THE ENGINEER OF RECORD ONE SET OF MYLARS AND A DIGITAL COPY OF RECORD DRAWINGS IN CAD AND PDF FORMAT. RECORD INFORMATION SHALL BE ON UNIQUE LAYER(S) AND TEXT SHALL USE A STANDARD AUTOCAD FONT.

WATER MAIN SEQUENCING

1. PRIOR TO SUBMITTING SHOP DRAWINGS: THE CONTRACTOR SHALL PERFORM EXPLORATORY EXCAVATIONS AT:
   - THE PROPOSED CONNNECTION POINT TO THE EXISTING 8" WATER MAIN WATER MAIN ON 29TH STREET EAST; AND
   - THE PROPOSED CONNECTION POINT TO THE EXISTING 4" WATER MAIN ON 30TH STREET EAST.

   CONFIRM LOCATION, SIZE, AND TYPE OF EXISTING WATER MAIN AT BOTH LOCATIONS. REPORT ANY DISCREPANCIES TO THE ENGINEER.

2. CONSTRUCT AND TEST (HYDROSTATIC AND BACTERIOLOGICAL) NEW WATER MAINS ON 8TH AVENUE EAST AND 30TH STREET EAST AND NEW 1" WATER SERVICE LINE FOR 712 30TH STREET EAST WITHOUT INTERRUPTING SERVICE IN EXISTING WATER MAINS. PROVIDE A TEMPORARY JUMPER CONNECTION (CONNECTED TO THE 8" WATER MAIN ON 29TH STREET EAST) FOR WATER FOR TESTING.

3. FOLLOWING SUCCESFUL HYDROSTATIC AND BACTERIOLOGICAL TESTING, SCHEDULE SHUTDOWN OF EXISTING WATER MAIN WITH MANATEE COUNTY PUBLIC WORKS. THE CONTRACTOR SHALL BE RESPONSIBLE FOR ALL NOTIFICATIONS REQUIRED BY MANATEE COUNTY PUBLIC WORKS, INCLUDING BUT NOT LIMITED TO DISTRIBUTING DOORHANGERS TO ALL IMPACTED CUSTOMERS 48 HOURS IN ADVANCE OF THE START OF THE SHUTDOWN.

4. ON THE DAY OF THE SHUTDOWN: EXCAVATE THE EXISTING WATER MAIN AT LOCATIONS TO BE CUT AND CONFIRM THAT ALL NECESSARY MATERIALS ARE ON–SITE PRIOR TO PERFORMING THE SHUTDOWN. PERFORM SHUTDOWN BY CLOSING EXISTING VALVES AT:
   - 8TH AVENUE EAST, NORTH OF 29TH STREET EAST
   - 2ND AVENUE EAST, NORTH OF 29TH STREET EAST

   ALL EXISTING VALVES ARE TO BE OPERATED BY MANATEE COUNTY PUBLIC WORKS.

5. CUT THE EXISTING 4" WATER MAIN ON 30TH STREET EAST AND PERFORM THE FINAL CONNECTION OF THE NEW WATER MAIN TO THE EXISTING WATER MAIN IN ACCORDANCE WITH AWWA C651. CONNECT THE NEW 1" WATER SERVICE LINE TO THE EXISTING METER AT 712 30TH STREET EAST. RESTORE SERVICE IN THE EXISTING WATER MAIN BY OPENING THE EXISTING VALVE ON 2ND AVENUE EAST, NORTH OF 29TH STREET EAST. VISUALLY INSPECT THE FINAL CONNECTION FOR LEAKAGE. PERFORM FLUSHING AND TESTING AS REQUIRED BY MANATEE COUNTY PUBLIC WORKS AND FDEP.

6. ABANDON THE EXISTING VALVE ON 8TH AVENUE EAST, NORTH OF 29TH STREET EAST, BY REMOVING THE VALVE BOX COVER AND FILLING THE COLLAR WITH GROUT WITH THE VALVE IN THE CLOSED POSITION. CUT AND CAP THE EXISTING 2" WATER MAIN AS NEAR TO THE VALVE AS PRACTICAL. REMOVE OR ABANDON EXISTING WATER MAIN THAT HAS BEEN TAKEN OUT OF SERVICE.

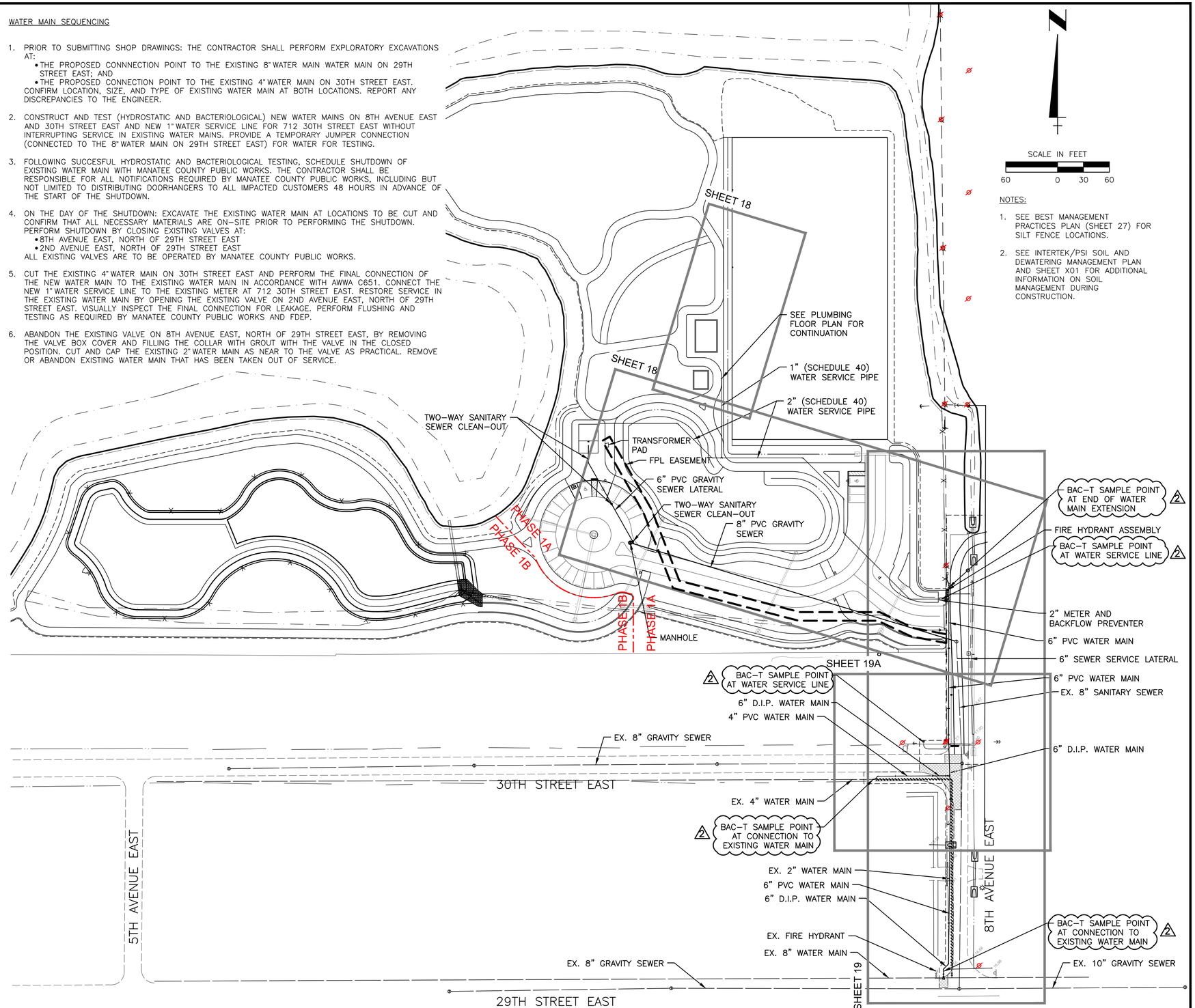

NOTES:

1. SEE BEST MANAGEMENT PRACTICES PLAN (SHEET 27) FOR SILT FENCE LOCATIONS.

2. SEE INTERTEK/PSI SOIL AND DEWATERING MANAGEMENT PLAN AND SHEET X01 FOR ADDITIONAL INFORMATION ON SOIL MANAGEMENT DURING CONSTRUCTION.

REV NO.	REVISION	DATE	DRAWN BY / EMP. NO.	CHECKED BY / EMP. NO.
8	REV NOTES, PHASE LINE.	4/17/23	RQS/89561	ET
7	ADD NOTES, PHASE LINE.	12/14/22	RQS/89561	ET
6	REV RR/SW LOC, RR SWR/WTR SERV LINES, ADD TRANSFORMER PAD, FPL ESMNT	6/21/22	RQS/89561	ET
5	REVISION TO LIMIT OF CONSTRUCTION PER MC	4/14/21	RQS/89561	EA
4	ADD 4" PVC CASING AND 6" SEWER SERVICE LATERAL	1/14/21	KG/101511	JS
3	REVISION TO RESTROOM, PAVILION, AND PLAYGROUND PER MC	1/6/21	KG/101511	RQS/89561
2	BAC–T SAMPLE POINTS ADDED	07/01/19	KG/101511	JS
1	WATER MAIN SEQUENCING ADDED	10/18/18	KG/101511	RQS/89561

ACTIVITY	INITIALS/EMP. NO.	DATE
DESIGNED BY:	JS	10/18/18
DRAWN BY:	KG	10/18/18
CHECKED BY:	SCM	10/18/18
CONTRACT ADMIN. BY:		
WM APPROVED BY:		

Stantec
6900 Professional Parkway East, Sarasota, FL34240-8414
Phone 941-907-6900 • Fax 941-907-6910
Certificate of Authorization #27013 • www.stantec.com

CLIENT: MANATEE BOARD OF COUNTY COMMISSIONERS

PROJECT: WASHINGTON PARK PRESERVE PHASE I

DATE: JULY 2019

HORIZONTAL SCALE:

VERTICAL SCALE:

SEC: 12 TWP: 34S RGE: 17E

CROSS REFERENCE FILE NO.:

TITLE: UTILITY SITE PLAN GENERAL NOTES AND KEY SHEET

PROJECT NUMBER: 177310895

R. QUINCE SELLERS, P.E.
FLORIDA LICENSE NO. 49374

INDEX NUMBER:

SHEET NUMBER: 17 OF 28

Saved: 4/18/2023 7:09 AM QSELLERS | Plotted: 4/18/2023 8:42:57 AM QSELLERS | V:\1773\active\177310895\05_report_data\drawing_design\cad_fp\sheet\177310895-01C-017.dwg

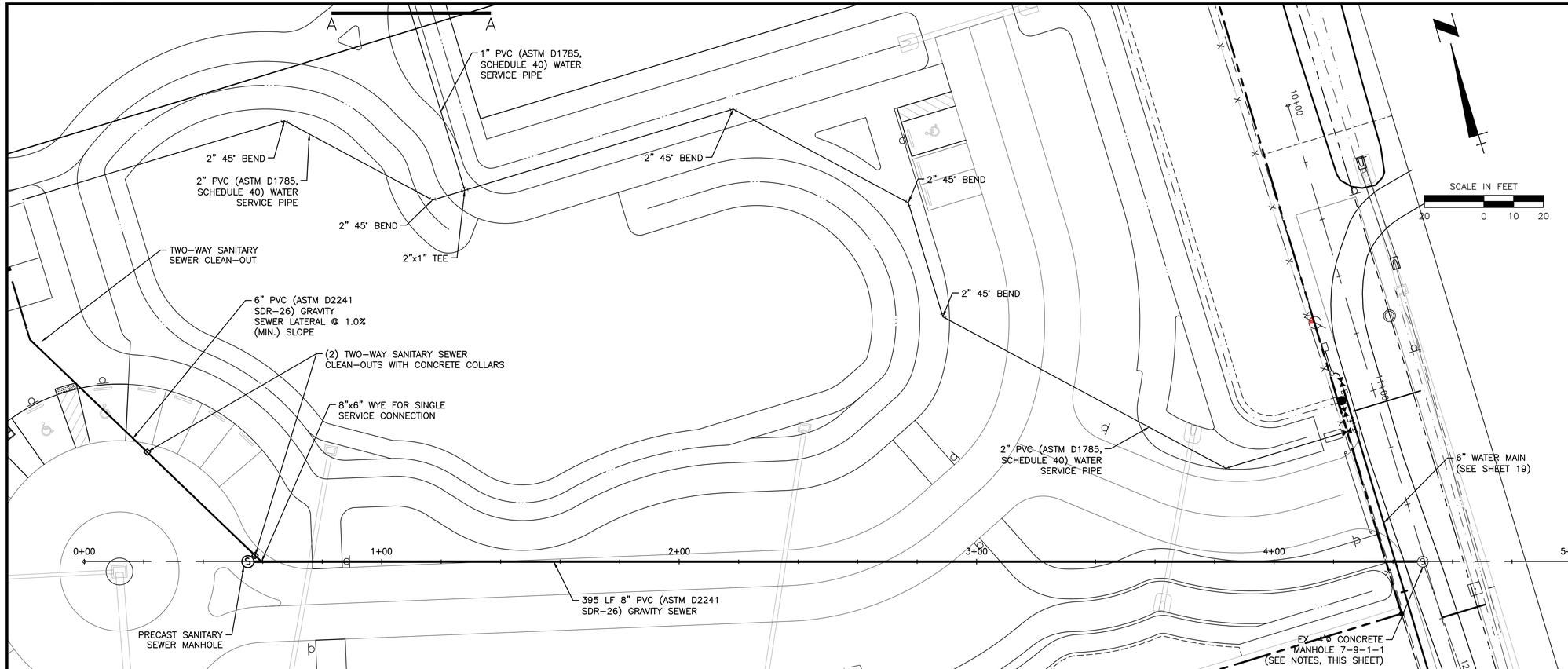

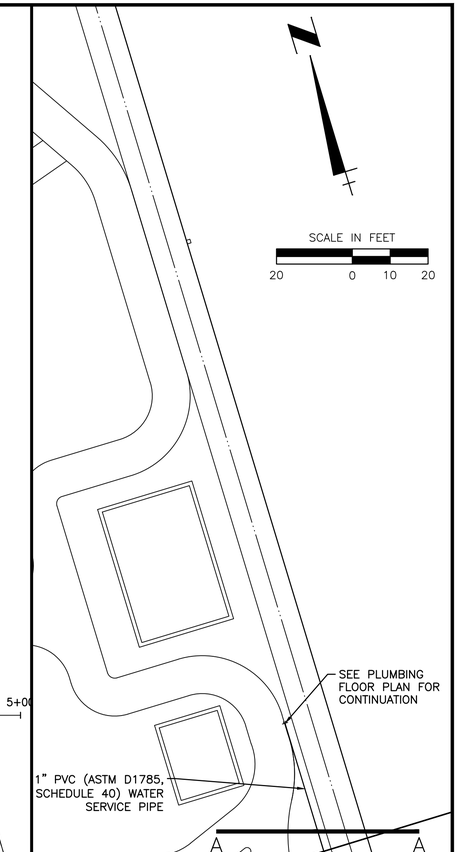

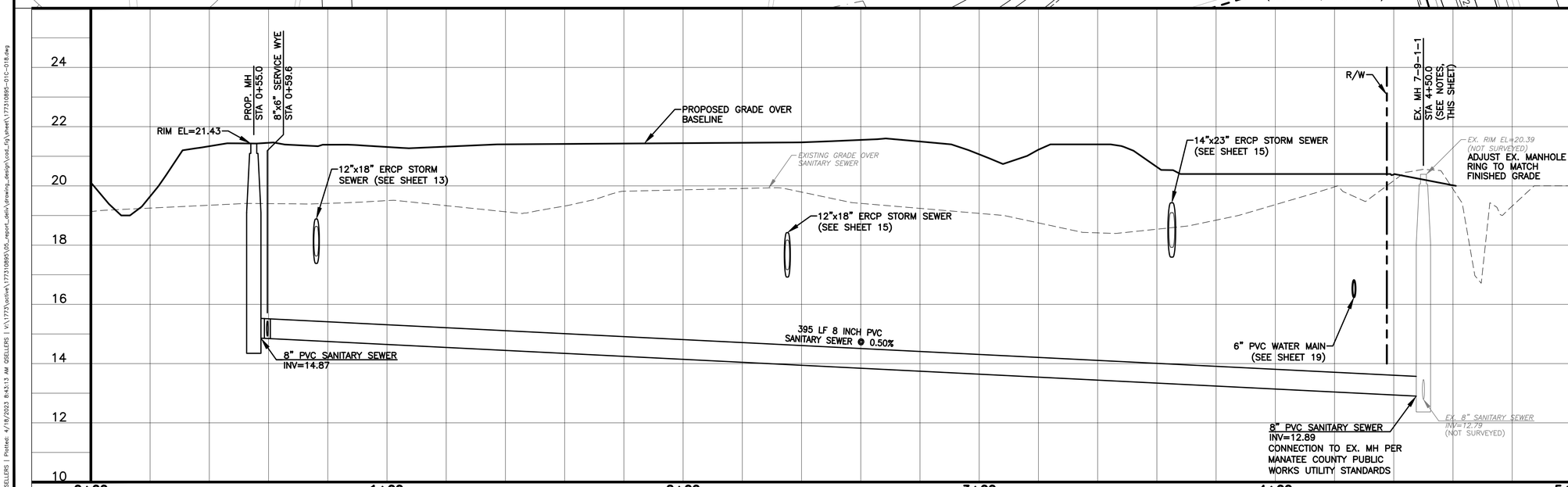

MANHOLE 7-9-1-1 NOTES:

1. INFORMATION SHOWN FOR MANHOLE 7-9-1-1 IS BASED ON RECORD DRAWINGS.
2. PRIOR TO SUBMITTING SHOP DRAWINGS: THE CONTRACTOR SHALL SURVEY THE HORIZONTAL LOCATION, RIM ELEVATION, AND INVERT ELEVATION FOR MANHOLE 7-9-1-1 AND REPORT ANY DISCREPANCIES TO THE ENGINEER.

△REV NO.	REVISION	DATE	DRAWN BY / EMP. NO.	CHECKED BY / EMP. NO.
5	REV RESTROOM SEWER SERVICE LINE & WATER SERVICE LINE	6/21/22	RQS/89561	ET
4	REVISION TO INTERNAL LIMIT OF CONSTRUCTION PER MC	4/14/21	RQS/89561	EA
3	REVISION TO RESTROOM, PAVILION, AND PLAYGROUND PER MC	1/6/21	KG/101511	RQS/89561
2	FIRE HYDRANT RELOCATED	10/18/18	KG/101511	RQS/89561
1	MH 7-9-1-1 NOTES ADDED	10/18/18	KG/101511	RQS/89561

ACTIVITY	INITIALS/EMP. NO.	DATE
DESIGNED BY:	JS	10/18/18
DRAWN BY:	KG	10/18/18
CHECKED BY:	SCM	10/18/18
CONTRACT ADMIN. BY:		
WM APPROVED BY:		

Stantec
6900 Professional Parkway East, Sarasota, FL34240-8414
Phone 941-907-6900 • Fax 941-907-6910
Certificate of Authorization #27013 • www.stantec.com

CLIENT: MANATEE BOARD OF COUNTY COMMISSIONERS

PROJECT: WASHINGTON PARK PRESERVE PHASE I

DATE: JULY 2019
HORIZONTAL SCALE:
VERTICAL SCALE:
SEC: 12 TWP: 34S RGE: 17E
CROSS REFERENCE FILE NO.:
PROJECT NUMBER: 177310895

TITLE: UTILITY PLAN & PROFILE WASHINGTON PARK PRESERVE

R. QUINCE SELLERS, P.E.
FLORIDA LICENSE NO. 49374
INDEX NUMBER:
SHEET NUMBER: 18 OF 28

Saved: 4/18/2023 7:14 AM QSELLERS | Plotted: 4/18/2023 8:43:13 AM QSELLERS | V:\1773\active\177310895\05_report_dwl\drawing_design\cad_fig\sheet\177310895-01C-018.dwg

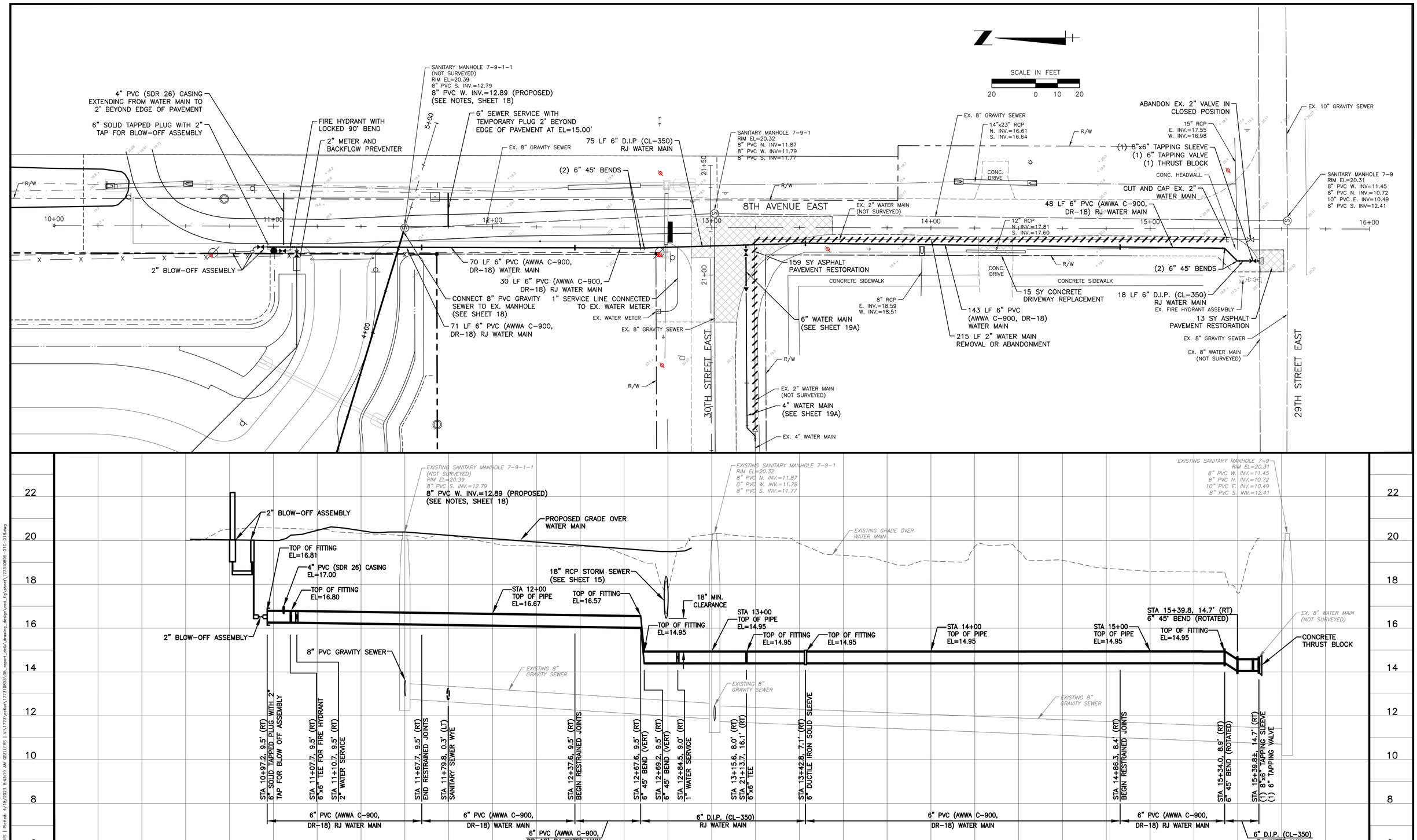

REV. NO.	REVISION	DATE	DRAWN BY / EMP. NO.	CHECKED BY / EMP. NO.
6	ADD 4" PVC CASING AND 6" SEWER SERVICE	1/14/21	KG/101511	JS
5	TIE-IN TO WATER MAIN ON 30TH STREET EAST ADDED	10/18/18	KG/101511	RQS/89561
4	EX. WATER MAIN TO BE REMOVED/ABANDONED	10/18/18	KG/101511	RQS/89561
3	BLOW-OFF ASSEMBLY DEPICTED ON PROFILE	10/18/18	KG/101511	RQS/89561
2	FIRE HYDRANT RELOCATED	10/18/18	KG/101511	RQS/89561
1	MH 7-9-1-1 NOTES ADDED	10/18/18	KG/101511	RQS/89561

ACTIVITY	INITIALS/EMP. NO.	DATE
DESIGNED BY:	JS	10/18/18
DRAWN BY:	KG	10/18/18
CHECKED BY:	SCM	10/18/18
CONTRACT ADMIN. BY:		
WM APPROVED BY:		

Stantec
6900 Professional Parkway East, Sarasota, FL34240-8414
Phone 941-907-6900 • Fax 941-907-6910
Certificate of Authorization #27013 • www.stantec.com

CLIENT: MANATEE BOARD OF COUNTY COMMISSIONERS

PROJECT: WASHINGTON PARK PRESERVE PHASE I

DATE: JULY 2019
HORIZONTAL SCALE:
VERTICAL SCALE:
SEC: 12 TWP: 34S RGE: 17E
CROSS REFERENCE FILE NO.:
PROJECT NUMBER: 177310895

TITLE: UTILITY PLAN & PROFILE 8TH AVENUE EAST

R. QUINCE SELLERS, P.E.
FLORIDA LICENSE NO. 49374
INDEX NUMBER:
SHEET NUMBER: 19 OF 28

Saved: 4/18/2023 7:14 AM QSELLERS | Plotted: 4/18/2023 8:43:19 AM QSELLERS | V:\1773\active\177310895\05_report_deliv\drawing_design\cad_fig\sheet\177310895-01C-018.dwg

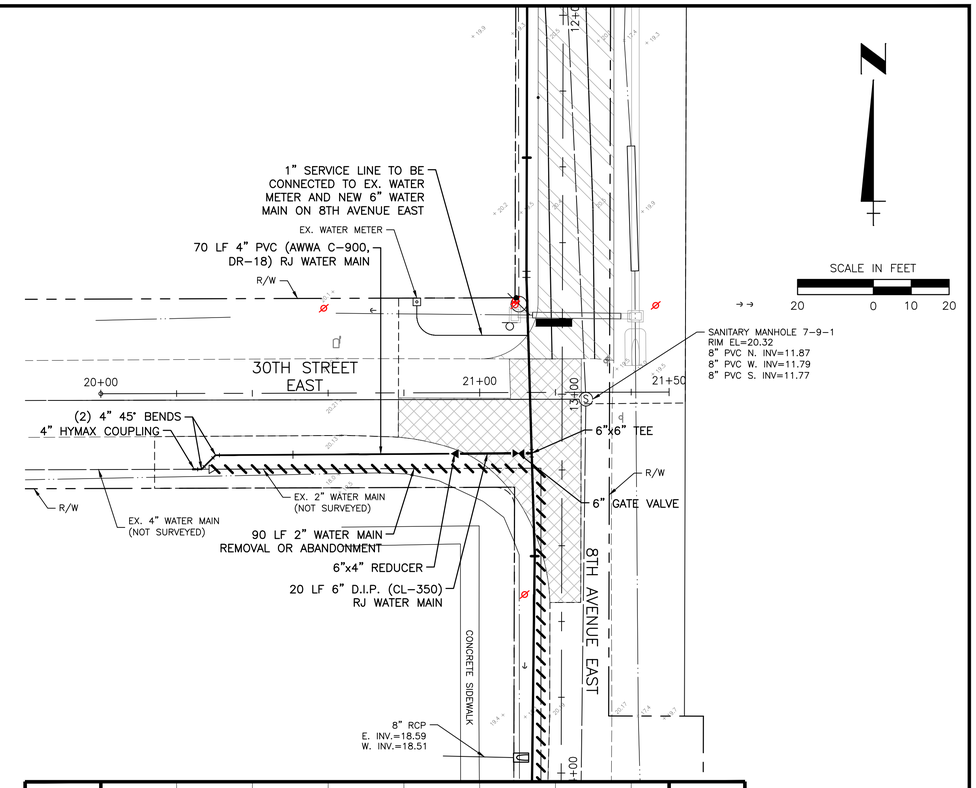

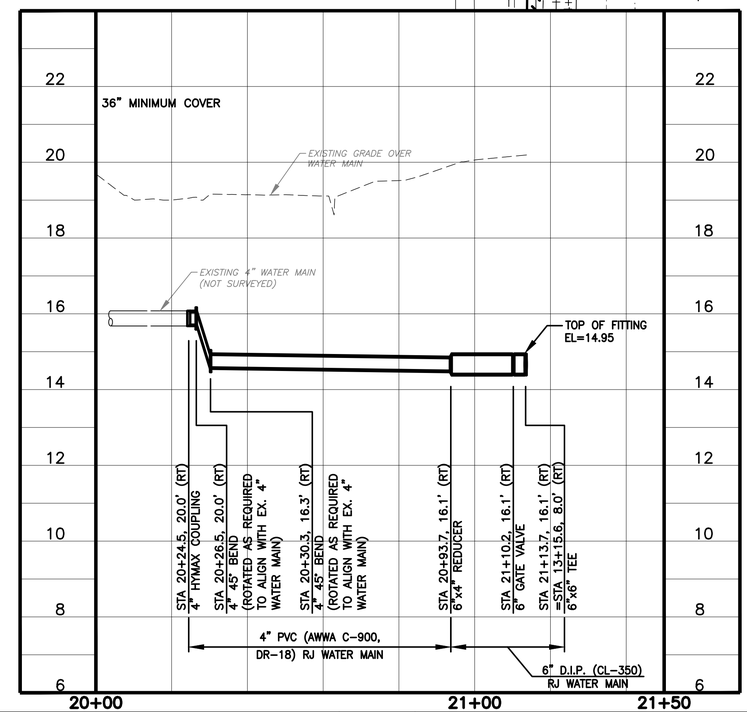

REV NO.	REVISION	DATE	DRAWN BY / EMP. NO.	CHECKED BY / EMP. NO.
2	ADD POTABLE WATER SERVICE LINE NOTE	11/8/18	KG/101511	RQS/89561
1	NEW SHEET ADDED FOR TIE-IN TO EXISTING WATER MAIN	10/18/18	KG/101511	RQS/89561

ACTIVITY	INITIALS/EMP. NO.	DATE
DESIGNED BY:	JS	10/18/18
DRAWN BY:	KG	10/18/18
CHECKED BY:	SCM	10/18/18
CONTRACT ADMIN. BY:		
WM APPROVED BY:		

Stantec
6900 Professional Parkway East, Sarasota, FL34240-8414
Phone 941-907-6900 • Fax 941-907-6910
Certificate of Authorization #27013 • www.stantec.com

CLIENT: MANATEE BOARD OF COUNTY COMMISSIONERS

PROJECT: WASHINGTON PARK PRESERVE PHASE I

DATE: JULY 2019

HORIZONTAL SCALE:

VERTICAL SCALE:

SEC: 12 TWP: 34S RGE: 17E

CROSS REFERENCE FILE NO.:

PROJECT NUMBER: 177310895

TITLE: UTILITY PLAN & PROFILE 30TH STREET EAST

R. QUINCE SELLERS, P.E.
FLORIDA LICENSE NO. 49374

INDEX NUMBER:

SHEET NUMBER: 19A OF 28

Saved: 4/18/2023 7:14 AM QSELLERS | Plotted: 4/18/2023 8:43:29 AM QSELLERS | V:\1773\active\177310895\05_report_deliv\drawing_design\cad_fig\sheet\177310895-01C-018.dwg

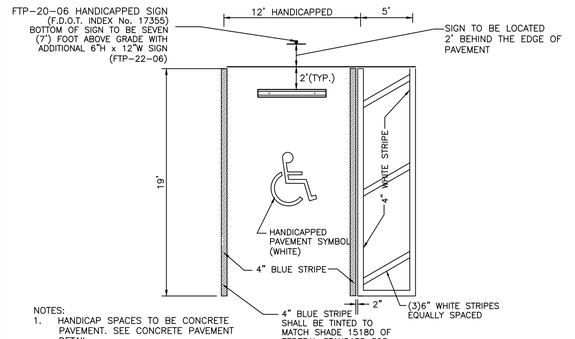

NOTES:
1. HANDICAP SPACES TO BE CONCRETE PAVEMENT. SEE CONCRETE PAVEMENT DETAIL.
2. WHEEL STOPS PER PLAN.

TYPICAL PARKING SPACE (HANDICAP)
N.T.S.

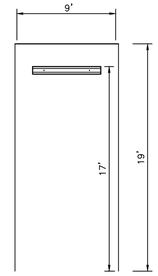

NOTES:
1. ONSITE PARKING SPACES TO BE CONCRETE PAVEMENT. SEE CONCRETE PAVEMENT DETAIL.
2. WHEEL STOPS PER PLAN.

TYPICAL PARKING SPACE
N.T.S.

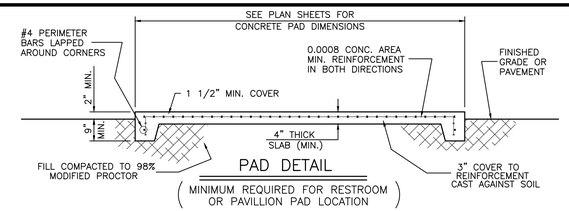

PAD DETAIL
(MINIMUM REQUIRED FOR RESTROOM OR PAVILLION PAD LOCATION)

MIN. CONC. STRENGTH f'c= 3000 P.S.I. MIN. REINFORCEMENT STRENGTH fy= 60,000 P.S.I.

CONCRETE PAD TYPICAL DETAIL
NTS

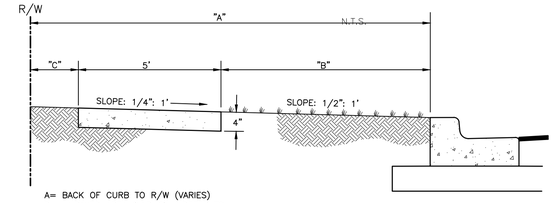

A= BACK OF CURB TO R/W (VARIES)
B= UNPAVED AREA (VARIES), REFER TO F.D.O.T. GREEN BOOK, TABLE 3-12, LATEST REVISION.
C= VARIES, SEE 401 SERIES

TYPICAL SIDEWALK LOCATION
WHERE APPLICABLE

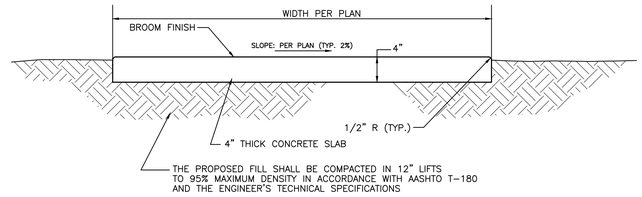

SIDEWALK NOTES:

1. CONCRETE SHALL HAVE A COMPRESSIVE STRENGTH OF 3000 P.S.I. IN 28 DAYS UNLESS OTHERWISE NOTED.
2. CONTRACTION JOINTS SHALL BE SAW CUT TO A 1 1/2" DEPTH AT INTERVALS EQUAL TO THE WIDTH OF THE SIDEWALK.
3. AN EXPANSION JOINT WILL BE PLACED AT THE END OF ALL RETURNS, AT FIXED OBJECTS (DRIVEWAYS, CURBS ETC.) AND INTERVALS NOT TO EXCEED 50' EXPANSION JOINTS SHALL BE CONSTRUCTED WITH 1/2" PREFORMED JOINT FILLER.
4. ALL SIDEWALKS AND SIDEWALK CROSSINGS SHALL BE CONSTRUCTED IN ACCORDANCE WITH THE AMERICANS WITH DISABILITIES ACT (ADA).

TYPICAL SIDEWALK DETAIL
(MANATEE) S-P023(9/3/02) N.T.S.

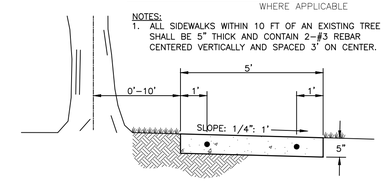

D= SIDEWALK WIDTH SHALL BE 6' STANDARD, WHERE WALK ABUTS TYPE "AB, D OR F" CURB. WHERE SPEED LIMIT IS 25 MPH OR LESS, WIDTH CAN BE 5'-6'.

* SEE SHEET 300.1 "GENERAL NOTES" FOR FURTHER INFORMATION

ALTERNATE SIDEWALK LOCATION
WHERE APPLICABLE

NOTES:
1. ALL SIDEWALKS WITHIN 10 FT OF AN EXISTING TREE SHALL BE 5" THICK AND CONTAIN 2-#3 REBAR CENTERED VERTICALLY AND SPACED 3' ON CENTER.

SIDEWALK LOCATION CLOSE TO TREES

SIDEWALK REQUIREMENTS
N.T.S.

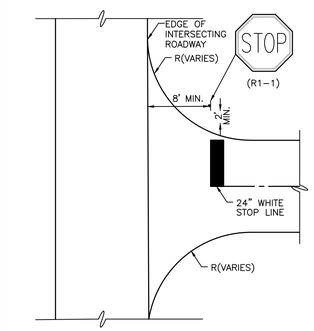

STOP SIGN
N.T.S.

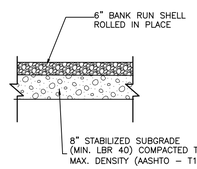

SHELL PARKING SECTION
N.T.S.

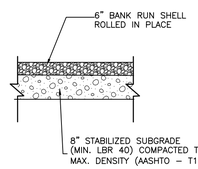

SHELL DRIVE SECTION
N.T.S.

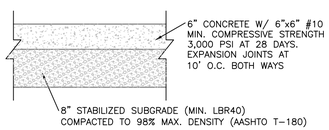

SEE SITE PLAN FOR CONCRETE PAVEMENT LOCATIONS.

ON-SITE CONCRETE PAVEMENT SECTION
N.T.S.

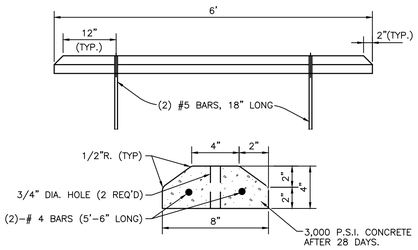

PRECAST CONCRETE WHEEL STOP
S-P029 N.T.S.

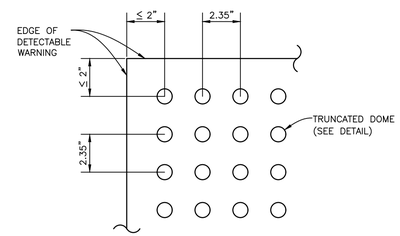

PLAN VIEW

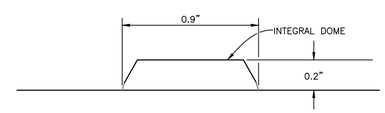

TRUNCATED DOME DETAIL

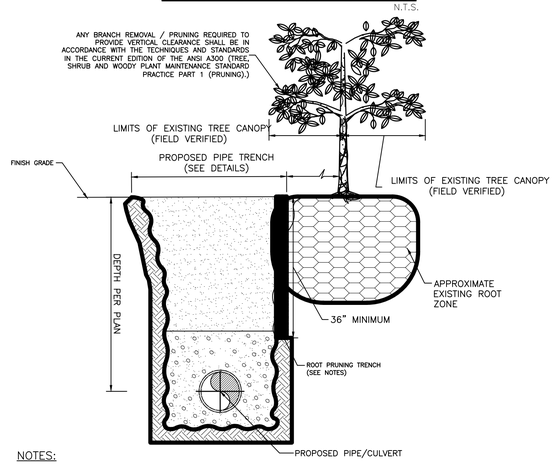

NOTES:

1. WHERE PIPE TRENCH EXCAVATION WILL OCCUR INSIDE ROOT ZONE (AS SHOWN) A ROOT PRUNING TRENCH SHALL BE CREATED PRIOR TO EXCAVATION OF THE PIPE TRENCH. ROOT PRUNING TRENCH SHALL BE CONSTRUCTED IN A MANNER SUCH THAT EXISTING ROOTS WILL BE CLEANLY SEVERED TO PRESENT A CLEAN, SMOOTH FACE. NO FRAYED OR SPLIT ROOTS SHALL BE LEFT WITHOUT CORRECTION. PRIOR TO COMMENCEMENT OF ROOT - DISTURBING ACTIVITIES CONTRACTOR SHALL SUBMIT SHOP DRAWINGS DETAILING PROPOSED METHODS AND EQUIPMENT TO BE USED TO THE ENGINEER FOR REVIEW AND APPROVAL. IN NO CASE SHALL EXCAVATION ENCROACH MORE THAN 1/3 INTO THE EXISTING TREE CANOPY LIMITS. SHEETING (OR EQUIVALENT METHOD) MAY BE REQUIRED TO LIMIT ENCROACHMENT INTO THE EXISTING TREE CANOPY.
2. NOTWITHSTANDING THE CONSTRUCTION OF THE ROOT PRUNING TRENCH, ANY ROOTS EXPOSED AND OR DAMAGED DURING CONSTRUCTION SHALL BE TREATED IN THE SAME MANNER AS DESCRIBED ABOVE.
3. PRIOR TO COMMENCEMENT OF ANY EXCAVATION, CONTRACTOR TO FIELD MARK LOCATIONS OF ROOT PRUNING TRENCHES AND BRANCH PRUNING FOR REVIEW AND APPROVAL BY ENGINEER.
4. TREE ROOTS EXPOSED DURING CONSTRUCTION SHALL HAVE A SUITABLE BROAD SPECTRUM FUNGICIDE APPLIED SUCH AS "SUBDUE MAXX" (*Mefenoxam*) OR APPROVED EQUAL. THIS APPLICATION SHALL BE APPLIED AT LABELED RATES AND ACCORDING TO LABELED DIRECTIONS PRIOR TO THE INTRODUCTION OF ANY BACKFILL.
5. ENGINEER TO REVIEW COMPLETED ROOT PRUNING TRENCH PRIOR TO BACKFILLING.
6. UPON COMPLETION OF ROOT PRUNING AND GRADING, PHC INJECTABLE FOR TREES TO BE SOIL INJECTED AT LABELED RATES AND ACCORDING TO LABELED DIRECTIONS WITHIN ENTIRE CANOPY AREA OF ANY TREE WHERE ROOT PRUNING HAS BEEN COMPLETED.

ROOT PRUNING DETAIL
N.T.S.

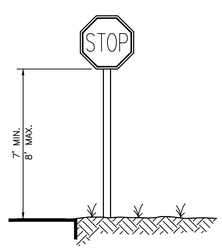

TYPICAL STOP SIGN DETAIL
N.T.S.

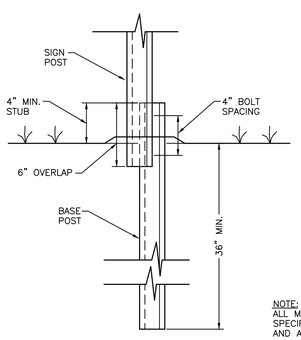

SIGN POST BREAKAWAY DETAIL
N.T.S.

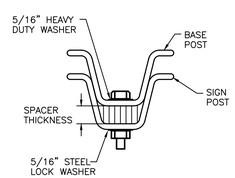

SECTION THROUGH SPLICE
N.T.S.

NOTE:
ALL MATERIALS AS PER F.D.O.T. SPECIFICATIONS, INDEX NO. 11865, AND ALL APPLICABLE COUNTY REQUIREMENTS.

NOTES DETECTABLE WARNINGS ON WALKING SURFACES

ALL DETECTABLE WARNINGS SURFACES/TRUNCATED DOMES SHALL BE TOP GUARD - DETECTABLE WARNING SYSTEMS (QPL S527-0043) OR APPROVED ALTERNATE. THE ENTIRE DETECTABLE WARNING SURFACE SHALL BE SEAMLESS (COLOR TO BE DETERMINED BY OWNER).

THE DETECTABLE WARNING SHALL EXTEND THE FULL WIDTH AND DEPTH OF THE CURB RAMP.

DETECTABLE WARNINGS SHALL CONSIST OF RAISED TRUNCATED DOMES WITH A DIAMETER OF NOMINAL 0.9 INCH, A HEIGHT OF NOMINAL 0.2 INCH AND A CENTER-TO-CENTER SPACING OF NOMINAL 2.35 INCH AND SHALL CONTRAST VISUALLY WITH ADJOINING SURFACES, EITHER LIGHT-ON-DARK, OR DARK-ON-LIGHT.

THE MATERIAL USED TO PROVIDE CONTRAST SHALL BE AN INTEGRAL PART OF THE WALKING SURFACE. DETECTABLE WARNINGS USED ON INTERIOR SURFACES SHALL DIFFER FROM ADJOINING WALKING SURFACES IN RESILIENCY OR SOUND-ON-CANE CONTACT.

THE MATERIAL USED TO PROVIDE CONTRAST SHOULD CONTRAST BY AT LEAST 70%. CONTRAST IN PERCENT IS DETERMINED BY:

$$\text{CONTRAST} = [(B1-B2)/B1] \times 100$$

WHERE B1 = LIGHT REFLECTANCE VALUE (LRV) OF THE LIGHTER AREA AND B2 = LIGHT REFLECTANCE VALUE (LRV) OF THE DARKER AREA.

NOTE THAT IN ANY APPLICATION BOTH WHITE AND BLACK ARE NEVER ABSOLUTE; THUS, B1 NEVER EQUALS 100 AND B2 IS ALWAYS GREATER THAN 0.

DETECTABLE WARNING DETAIL
N.T.S.

REV NO.	REVISION	DATE	DRAWN BY / EMP. NO.	CHECKED BY / EMP. NO.
3	UPDATE TYPICAL PARKING SPACE DETAIL	12/14/22	RQS/89561	ET
2	UPDATE TYPICAL STOP SIGN DETAIL	10/18/18	KG/101511	RQS/89561
1	UPDATE TYPICAL SHELL PARKING DETAIL	8/27/18	KG/101511	RQS/89561

ACTIVITY	INITIALS/EMP. NO.	DATE
DESIGNED BY:		
DRAWN BY:		
CHECKED BY:		
CONTRACT ADMIN. BY:		
WM APPROVED BY:		

Stantec
6900 Professional Parkway East, Sarasota, FL34240-8414
Phone 941-907-6900 • Fax 941-907-6910
Certificate of Authorization #27013 • www.stantec.com

CLIENT: MANATEE BOARD OF COUNTY COMMISSIONERS

PROJECT: WASHINGTON PARK PRESERVE PHASE I

DATE: JULY 2019
HORIZONTAL SCALE:
VERTICAL SCALE:
SEC: 12 TWP: 34S RGE: 17E

TITLE: CONSTRUCTION DETAILS

CROSS REFERENCE FILE NO.:
PROJECT NUMBER: 177310895

R. QUINCE SELLERS, P.E.
FLORIDA LICENSE NO. 49374

INDEX NUMBER:

SHEET NUMBER: 20 OF 28

Saved: 12/13/2022 11:41 AM QSELLERS | Plotted: 4/18/2023 8:43:37 AM QSELLERS | K:\17370\active\177310895\05_report_deliv\drawing_design\cost_fig\sheet\177310895-01C-020.dwg

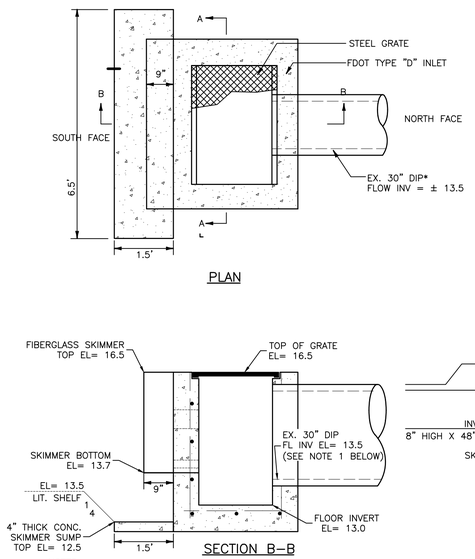

NOTES:

1. EXISTING 30" DUCTILE IRON PIPE (DIP) IS TO BE FIELD CUT AT LOCATION SHOWN FOR STRUCTURE CS–1. THIS EXISTING PIPE IS TO BE USED AS THE DISCHARGE PIPE FOR STR CS–1.

F.D.O.T. TYPE "D" CONTROL STRUCTURE – CS–1

N.T.S.

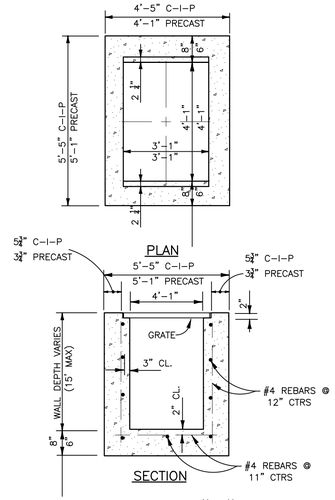

NOTES

1. INLET SHALL HAVE 3" DIA. HOLE AT THE BOTTOM OF THE BOX CLEAR OF THE PIPE CONSTRUCTION, TO BE PLUGGED WHEN CONCRETE INVERT FORMED.
2. U.S.F. GRATE NO. 6607 (STEEL)
3. FRAME & GRATE SHALL BE OF STEEL CONSTRUCTION COATED WITH 2 APPLICATIONS OF BLACK ENAMEL, 4.0 MILS DRY FILM THICKNESS EACH COAT, 8 MILS TOTAL. COATING SHALL MEET OR EXCEED FDOT SPECIFICATION 971–8. CONTRACTOR SHALL APPLY ONE FIELD COAT TO ANY BARE AREAS AS DETERMINED BY ENGINEER.
4. 3/4" CHAMFER ALL EXPOSED EDGES.
5. 3000 PSI CONCRETE @ 28 DAYS SHALL BE USED THROUGHOUT.
6. POURED CONCRETE INVERT AFTER INLET & PIPE PLACED IN GROUND, 3000 PSI @ 28 DAYS.
7. REINFORCING STEEL SHALL BE INTERMEDIATE GRADE BILLET WITH DEFORMATIONS CONFORMING TO ASTM A–615–76A. ALL STEEL SHALL BE 2" CLEAR UNLESS OTHERWISE
8. THE CONTRACTOR SHALL SUBMIT SHOP DRAWINGS OF THE SKIMMER ASSEMBLY, FOR APPROVAL, PRIOR TO CONSTRUCTION.

F.D.O.T. TYPE "D" STRUCTURE TYPICAL DETAIL

N.T.S.

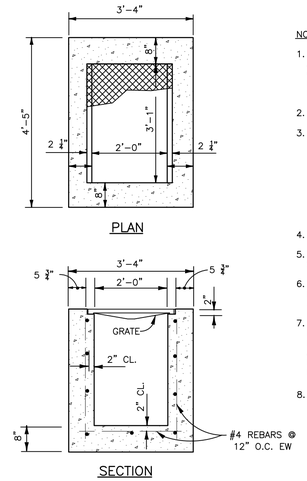

NOTES

1. INLET SHALL HAVE 3" DIA. HOLE AT THE BOTTOM OF THE BOX CLEAR OF THE PIPE CONSTRUCTION, TO BE PLUGGED WHEN CONCRETE INVERT FORMED.
2. U.S.F. GRATE NO. 6606 (STEEL)
3. FRAME & GRATE SHALL BE OF STEEL CONSTRUCTION COATED WITH 2 APPLICATIONS OF BLACK ENAMEL, 4.0 MILS DRY FILM THICKNESS EACH COAT, 8 MILS TOTAL. COATING SHALL MEET OR EXCEED FDOT SPECIFICATION 971–8. CONTRACTOR SHALL APPLY ONE FIELD COAT TO ANY BARE AREAS AS DETERMINED BY ENGINEER.
4. 3/4" CHAMFER ALL EXPOSED EDGES.
5. 3000 PSI CONCRETE @ 28 DAYS SHALL BE USED THROUGHOUT.
6. POURED CONCRETE INVERT AFTER INLET & PIPE PLACED IN GROUND, 3000 PSI @ 28 DAYS.
7. REINFORCING STEEL SHALL BE INTERMEDIATE GRADE BILLET WITH DEFORMATIONS CONFORMING TO ASTM A–615–76A. ALL STEEL SHALL BE 2" CLEAR UNLESS OTHERWISE NOTED.
8. THE CONTRACTOR SHALL SUBMIT SHOP DRAWINGS OF THE SKIMMER ASSEMBLY, FOR APPROVAL, PRIOR TO CONSTRUCTION.

F.D.O.T. TYPE "C" INLET TYPICAL DETAIL

S–D048(04/09/04)

N.T.S.

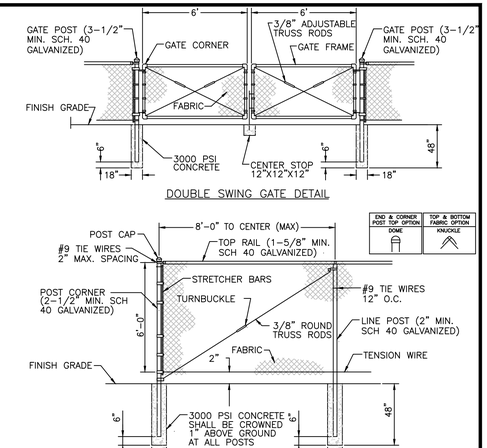

NOTES:
REQUIREMENTS PER SECTION 32 31 13 – MANATEE COUNTY PROPERTY MANAGEMENT DEPARTMENT PREFERRED BUILDING AND GROUNDS EQUIPMENT, MATERIALS AND DESIGN CRITERIA CATALOG:

1. ALL FINCING CONNECTIONS AND HARDWARE SHALL BE PAINTED BLACK TO MATCH THE FENCE FABRIC AND POSTS.
2. THE CHAINLINK FENCE SHALL BE 9 GAUGE CORE.
3. THE CHAIN LINK IS REQUIRE BE INSTALLED WITH THE SELVAGE UP..
4. THE CHAIN LINK FENCE REQUIRES TO HAVE BLACK FENCE FABRIC OR BLACK VINYL COATED SLATS.
5. THE CHAIN LINK POST AND SUPPORTS TO BE BLACK IN COLOR.
6. ALL 2" POST ARE REQUIRED TO BE BLACK VINYL COATED WITH BLACK VINYL COATED CAPS.
7. ALL 2.5" CORNER POST ARE REQUIRED TO BE BLACK VINYL COATED CAPS.
8. ALL 1.5" LATERAL SUPPORTS ARE REQUIRED TO BE BLACK VINYL COATED.
9. ALL EXTERIOR EQUIPMENT THAT IS REQUIRED TO BE ENCLOSED WITH A CHAINLINK, FENCE SLAT MUST BE INSTALLED TO SECURE THE EQUIPMENT. AS A SAMPLE ENCLOSED AIR CONDITION SYSTEM, DUMPSTER, LIFT. MOST BE ENCLOSED AND SECURED.

SECURITY FENCE DETAIL

N.T.S.

NOTES:

1. CONCRETE SHALL BE 3000 P.S.I. @ 28 DAYS
2. CHAMFER ALL EXPOSED EDGES 3/4".
3. RIP–RAP SHALL BE SUPPLIED AND CONSTRUCTED AS DEFINED IN THE F.D.O.T. SPECIFICATIONS SEC. 530, "RIP–RAP", SPECIFICALLY SEC. 530–3.1 OR SEC. 530–3.3 "CONSTRUCTION METHODS" 5 SY. RIP–RAP AND FILTER CLOTH TO BE NCLUDED IN THE UNIT PRICE OF THE MITERED END SECTION. IF ADDITIONAL RIP–RAP (> 5 SY.) IS REQUIRED AND DIRECTED, IT SHALL BE PAID FOR ON PER YARD BASIS IN ACCORDANCE WITH THE CONTRACT DOCUMENTS.
4. FILTER FABRIC SHALL BE SUPPLIED AND CONSTRUCTED AS DEFINED IN THE F.D.O.T. SPECIFICATIONS SEC. 514, PLASTIC FILTER FABRIC, SPECIFICALLY SEC. 514–3.4 RIPRAP, INCLUDED IN UNIT COST OF MITERED END SECTION.

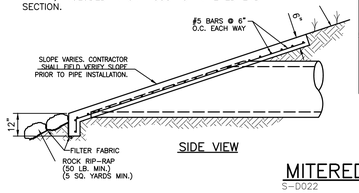

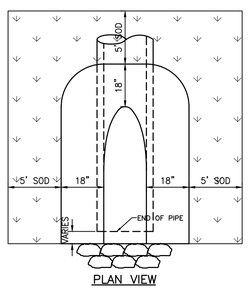

MITERED END SECTION

S–D022

N.T.S.

GENERAL DRAINAGE STRUCTURE NOTES:

1. UNLESS OTHERWISE NOTED, ALL DRAINAGE STRUCTURES SHALL BE DESIGNED TO MEET FDOT DESIGN STANDARDS/SPECIFICATIONS.
2. ALL STEEL FRAMES AND GRATES SHALL BE HOT–DIPPED GALVANIZED AFTER FABRICATION.
3. THE PRE–CASTER SHALL PROVIDE A LETTER WITH EACH SHOP DRAWING SUBMITTAL STATING THAT THE PRE–CAST STRUCTURES MEET OR EXCEED FDOT DESIGN STANDARDS/ SPECIFICATIONS.
4. FILTER FABRIC WRAP SHALL BE PLACED ON THE GROUTED PIPE TO STRUCTURE JOINT PER FDOT INDEX 201.
5. ALL DRAINAGE STRUCTURES SHALL HAVE CONCRETE POURED INVERTS PER FDOT INDEX 201.

NOTE:
FILTER FABRIC MATERIAL MUST MEET THE FOLLOWING ASTM REQUIREMENTS:

ASTM D 4595
ASTM D 4632
ASTM D 4533
ASTM D 4833
ASTM D 4491

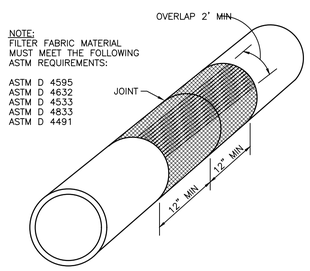

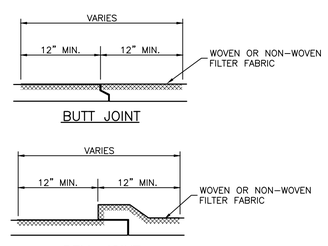

NOTES:

1. CENTER FILTER FABRIC ON PIPE JOINT.
2. FILTER FABRIC TO OVERLAP A MIN. OF ONE FOOT.
3. PRICE OF FILTER FABRIC JACKET TO BE INCLUDED IN PRICE OF PIPE.
4. CONTRACTOR SHALL UTILIZE SECURING DEVICES TO WRAP AROUND THE PIPE AND HOLD THE FILTER FABRIC JACKET IN PLACE.

FILTER FABRIC JACKET

(09/04/07)
(MANATEE)

N.T.S.

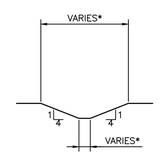

NOTE:

1. *–SEE GRADING & DRAINAGE PLAN SHEETS FOR GRADES AND DIMENSIONS.

TYPICAL SWALE SECTION

N.T.S.

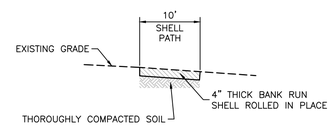

NOTE:

1. SLOPES SHALL BE ADA COMPLIANT, RUNNING SLOPES SHALL BE LESS THAN 5% AND CROSS SLOPES LESS THAN 2%.

TYPICAL SHELL PATH DETAIL

N.T.S.

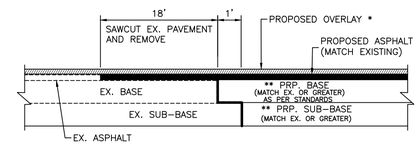

NOTES:

1. * – LIMITS OF OVERLAY, EDGE OF PAVEMENT TO TEDG OF PAVEMENT AND 25' BEYOND LIMITS OF CONSTRUCTION.
2. ** – CONNECTION TO OLDER (SUBSTANDARD THICKNESS) ROADS MAY REQUIRE THICKER PROPOSED BASE AND SUB–BASE TO MEET CURRENT STANDARDS.
3. SEE CONSTRUCTION PLAN FOR SIGNAGE AND MARKING.

ROAD CONNECTION DETAIL

N.T.S.

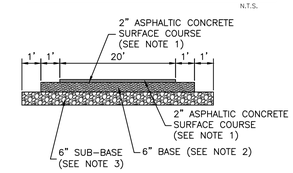

NOTES:

1. ASPHALTIC CONCRETE SURFACE COURSE SHALL BE LAYED IN TWO LIFTS. FIRST LIFT SHALL BE 1" TYPE S–I OR S–III. SECOND LIFT SHALL BE 1" TYPE S–III. A PERFORMANCE BOND SHALL BE REQUIRED IF SECOND LIFT IS DELAYED BEYOND ACCEPTANCE OF ROAD.
2. BASE COURSE SHALL CONSIST OF 4–1/2" COMPACTED SAND ASPHALT BASE (1200 LBS. STAB.) OR 6" CALOOSCHATCHEE SHELL COMPACTED TO 98% AASHTO T–180 OR 6" SOIL CEMENT. (OR APPROVED EQUAL, MEETING SAME STRUCTURAL NUMBER.)
3. 6" STABILIZED SUB–BASE SHALL CONSIST OF SHELL MARL BLENDED WITH SANDY SUB–GRADE MINIMUM LBR 40, 98% AASHTO T–180.
4. NO PORTION OF DRAINAGE PIPE SHALL BE ALLOWED IN SUB–BASE. 12" MINIMUM COVER IS REQUIRED ON STORM DRAIN.
5. LABORATORY TESTS ARE REQUIRED TO SUBSTANTIATE STRUCTUREAL SECTION DESIGN. SPECIFICATIONS SHOWN ON THIS SHEET ARE MINIMUM REQUIREMENTS.

OFFSITE ROAD PAVEMENT SECTION

N.T.S.

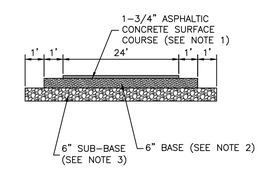

NOTES:

1. ASPHALTIC CONCRETE SURFACE COURSE SHALL BE LAYED IN TWO LIFTS. FIRST LIFT SHALL BE 1" TYPE S–I OR S–III. SECOND LIFT SHALL BE 3/4" TYPE S–III. A PERFORMANCE BOND SHALL BE REQUIRED IF SECOND LIFT IS DELAYED BEYOND ACCEPTANCE OF ROAD.
2. BASE COURSE SHALL CONSIST OF 4–1/2" COMPACTED SAND ASPHALT BASE (1200 LBS. STAB.) OR 6" CALOOSCHATCHEE SHELL COMPACTED TO 98% AASHTO T–180 OR 6" SOIL CEMENT. (OR APPROVED EQUAL, MEETING SAME STRUCTURAL NUMBER.)
3. 6" STABILIZED SUB–BASE SHALL CONSIST OF SHELL MARL BLENDED WITH SANDY SUB–GRADE MINIMUM LBR 40, 98% AASHTO T–180.
4. NO PORTION OF DRAINAGE PIPE SHALL BE ALLOWED IN SUB–BASE. 12" MINIMUM COVER IS REQUIRED ON STORM DRAIN.
5. LABORATORY TESTS ARE REQUIRED TO SUBSTANTIATE STRUCTUREAL SECTION DESIGN. SPECIFICATIONS SHOWN ON THIS SHEET ARE MINIMUM REQUIREMENTS.

ONSITE ROAD PAVEMENT SECTION

N.T.S.

△REV NO.	REVISION	DATE	DRAWN BY / EMP. NO.	CHECKED BY / EMP. NO.
3	REV OFFST RD PVMT DET, ADD ONST RD PVMT DET PER MC	12/14/22	RQS/89561	ET
2	ADD SECURITY FENCE DETAIL PER MC	4/19/21	RQS/89561	EA
1	ADD ROAD CONNECTION DETAIL, OFFSITE ROAD PAVEMENT SECTION	10/18/18	KG/101511	RQS/89561
1	ADD TYPICAL SHELL PATH DETAIL, ADD 100YR DHWL	8/27/18	KG/101511	RQS/89561

ACTIVITY	INITIALS/EMP. NO.	DATE
DESIGNED BY:		
DRAWN BY:		
CHECKED BY:		
CONTRACT ADMIN. BY:		
WM APPROVED BY:		

Stantec
6900 Professional Parkway East, Sarasota, FL34240-8414
Phone 941-907-6900 • Fax 941-907-6910
Certificate of Authorization #27013 • www.stantec.com

CLIENT: MANATEE BOARD OF COUNTY COMMISSIONERS

PROJECT: WASHINGTON PARK PRESERVE PHASE I

DATE: JULY 2019
HORIZONTAL SCALE:
VERTICAL SCALE:
SEC: 12 TWP: 34S RGE: 17E
CROSS REFERENCE FILE NO.:
PROJECT NUMBER: 177310895

TITLE: CONSTRUCTION DETAILS

R. QUINCE SELLERS, P.E.
FLORIDA LICENSE NO. 49374

INDEX NUMBER:

SHEET NUMBER: 21 OF 28

Saved: 12/13/2022 11:41 AM QSELLERS | Plotted: 4/18/2023 8:43:39 AM QSELLERS | V:\1773\active\177310895\05_report_dwg\drawing_design\cnd_fig\sheet\177310895-01C-020.dwg

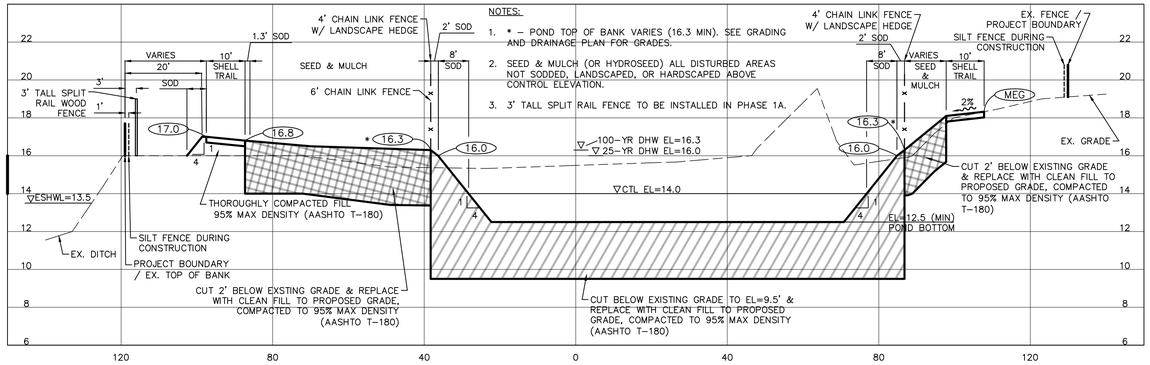

A–A TYPICAL POND BOTTOM SECTION (PHASE 1A & 1B)

1"=20' (HORIZ.)
1"=4' (VERT.)

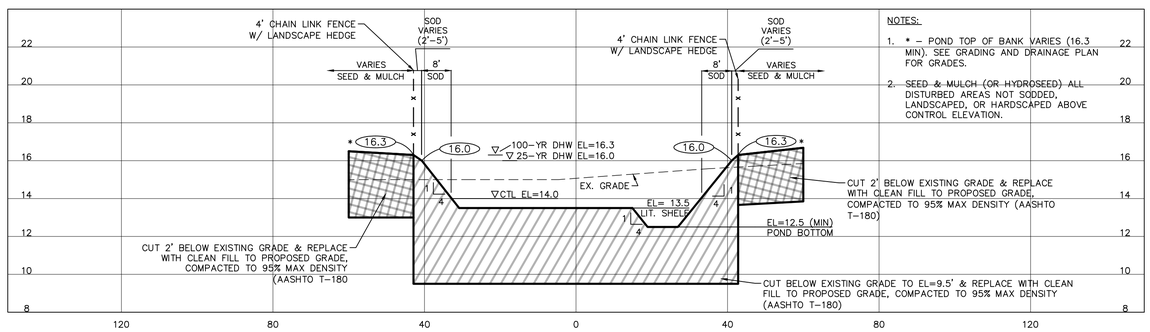

B–B TYPICAL POND LITTORAL SHELF SECTION (PHASE 1B)

1"=20' (HORIZ.)
1"=4' (VERT.)

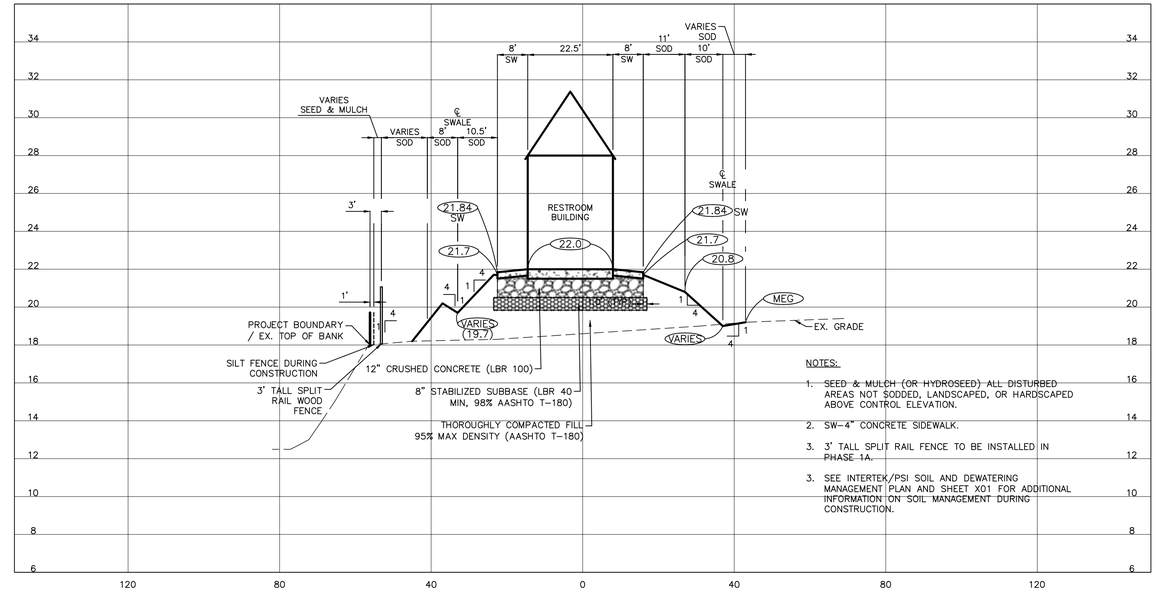

D–D TYPICAL RESTROOM PAVILION SECTION (PHASE 1A & 1B)

1"=20' (HORIZ.)
1"=4' (VERT.)

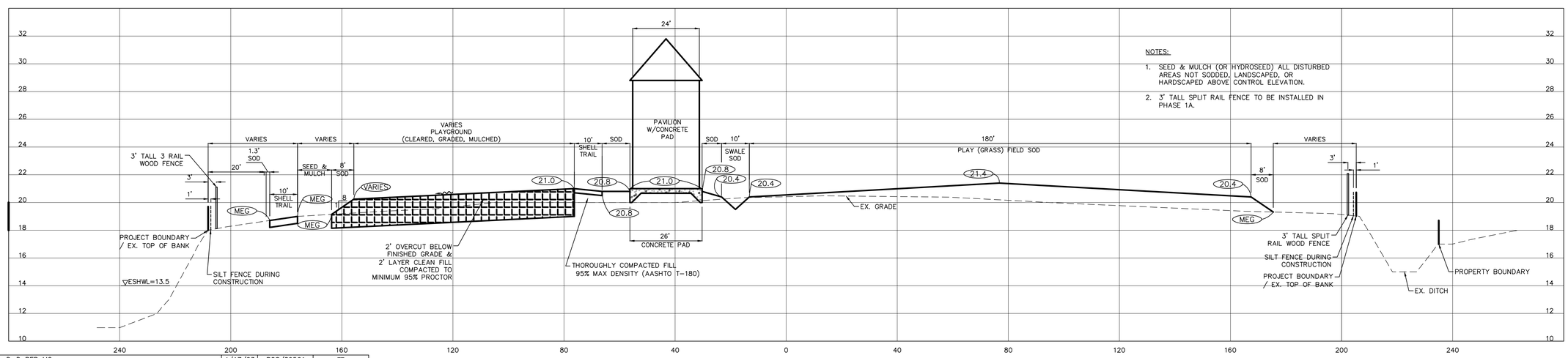

C–C TYPICAL PLAY (GRASS) FIELD / PLAYGROUND SECTION (PHASE 1A & 1B)

1"=20' (HORIZ.)
1"=4' (VERT.)

△REV NO.	REVISION	DATE	DRAWN BY / EMP. NO.	CHECKED BY / EMP. NO.
13	REV SEC A–A, C–C, D–D PER MC	4/17/23	RQS/89561	ET
12	REV SEC A–A, B–B, C–C, D–D PER MC	12/14/22	RQS/89561	ET
11	REV SEC A–A, B–B, C–C, D–D PER SMP UPDATE	11/9/22	RQS/89561	ET
10	REV SEC D–D	6/20/22	RQS/89561	ET
9	REV SEC A–A, B–B, C–C PER REV SMP	4/1/22	RQS/89561	ES
8	REV SEC C–C, D–D WD FNC PER MC REVS	12/15/21	RQS/89561	ES
8	REV SEC A–A, B–B SOIL CUT/FILL, PND FNC, WD FNC PER MC REVS	12/15/21	RQS/89561	ES
7	REVISE SEC. C–C, D–D, F–F, H–H PER MC	4/14/21	RQS/89561	ES
6	REVISION TO RESTROOM, PAVILION, AND PLAYGROUND PER MC	1/6/21	KG/101511	RQS/89561
5	REVISE SECTION A–A, POND BOTTOM, SECTION C–C	7/14/20	KG/101511	RQS/89561
4	REVISE TEXT PLAY (GRASS) FIELD, PLAYGROUND, ADD NOTE 2	7/10/19	KG/101511	RQS/89561
3	REVISE SECTION A–A, B–B, C–C TO REFLECT FENCE LOCATION AND LIMIT OF FILL	7/10/19	KG/101511	RQS/89561
2	REVISE SECTION A–A, C–C, D–D TO REFLECT FENCE LOCATION	10/18/18	KG/101511	RQS/89561
1	ADD 100-YR DHW EL, PROPERTY BOUNDARY, REVISE ELEVATIONS	8/27/18	KG/101511	RQS/89561

ACTIVITY	INITIALS/EMP. NO.	DATE
DESIGNED BY:		
DRAWN BY:		
CHECKED BY:		
CONTRACT ADMIN. BY:		
WM APPROVED BY:		

Stantec
6900 Professional Parkway East, Sarasota, FL34240-8414
Phone 941-907-6900 • Fax 941-907-6910
Certificate of Authorization #27013 • www.stantec.com

CLIENT: MANATEE BOARD OF COUNTY COMMISSIONERS

PROJECT: WASHINGTON PARK PRESERVE PHASE I

DATE: JULY 2019
HORIZONTAL SCALE:
VERTICAL SCALE:
SEC: 12 TWP: 34S RGE: 17E
CROSS REFERENCE FILE NO.:
PROJECT NUMBER: 177310895

TITLE: SECTIONS AND DETAILS

R. QUINCE SELLERS, P.E.
FLORIDA LICENSE NO. 49374

INDEX NUMBER:

SHEET NUMBER: 22 OF 28

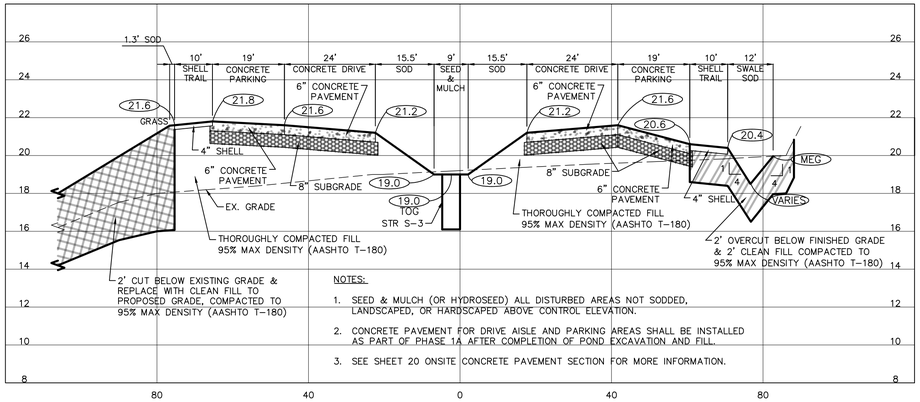

NOTES:

1. SEED & MULCH (OR HYDROSEED) ALL DISTURBED AREAS NOT SODDED, LANDSCAPED, OR HARDSCAPED ABOVE CONTROL ELEVATION.
2. CONCRETE PAVEMENT FOR DRIVE AISLE AND PARKING AREAS SHALL BE INSTALLED AS PART OF PHASE 1A AFTER COMPLETION OF POND EXCAVATION AND FILL.
3. SEE SHEET 20 ONSITE CONCRETE PAVEMENT SECTION FOR MORE INFORMATION.

E–E PARKING LOOP SECTION (PHASE 1A & 1B)

1"=20' (HORIZ.)
1"=4' (VERT.)

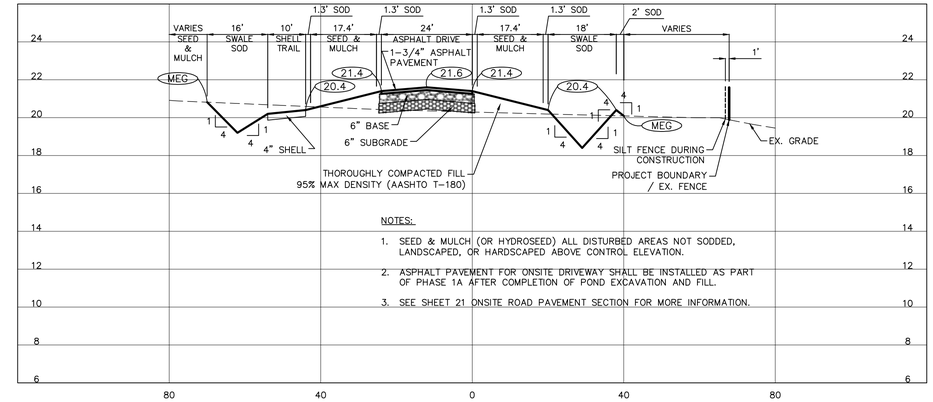

NOTES:

1. SEED & MULCH (OR HYDROSEED) ALL DISTURBED AREAS NOT SODDED, LANDSCAPED, OR HARDSCAPED ABOVE CONTROL ELEVATION.
2. ASPHALT PAVEMENT FOR ONSITE DRIVEWAY SHALL BE INSTALLED AS PART OF PHASE 1A AFTER COMPLETION OF POND EXCAVATION AND FILL.
3. SEE SHEET 21 ONSITE ROAD PAVEMENT SECTION FOR MORE INFORMATION.

F–F ONSITE DRIVEWAY SECTION (PHASE 1A & 1B)

1"=20' (HORIZ.)
1"=4' (VERT.)

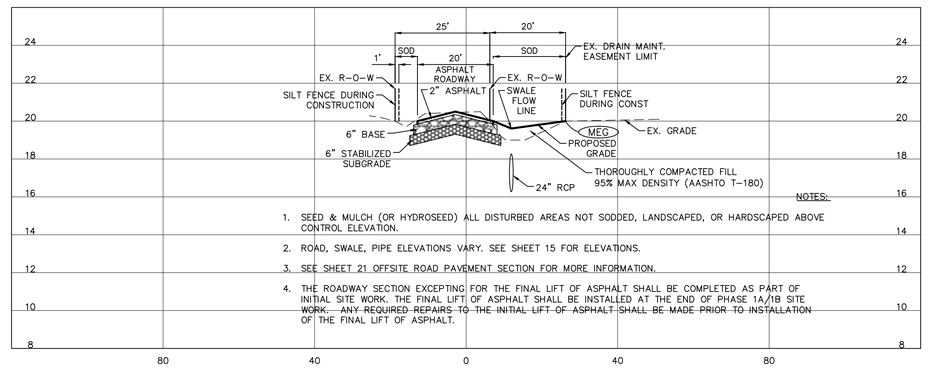

NOTES:

1. SEED & MULCH (OR HYDROSEED) ALL DISTURBED AREAS NOT SODDED, LANDSCAPED, OR HARDSCAPED ABOVE CONTROL ELEVATION.
2. ROAD, SWALE, PIPE ELEVATIONS VARY. SEE SHEET 15 FOR ELEVATIONS.
3. SEE SHEET 21 OFFSITE ROAD PAVEMENT SECTION FOR MORE INFORMATION.
4. THE ROADWAY SECTION EXCEPTING FOR THE FINAL LIFT OF ASPHALT SHALL BE COMPLETED AS PART OF INITIAL SITE WORK. THE FINAL LIFT OF ASPHALT SHALL BE INSTALLED AT THE END OF PHASE 1A/1B SITE WORK. ANY REQUIRED REPAIRS TO THE INITIAL LIFT OF ASPHALT SHALL BE MADE PRIOR TO INSTALLATION OF THE FINAL LIFT OF ASPHALT.

G–G 8TH AVENUE EAST (PHASE 1A & 1B)

1"=20' (HORIZ.)
1"=4' (VERT.)

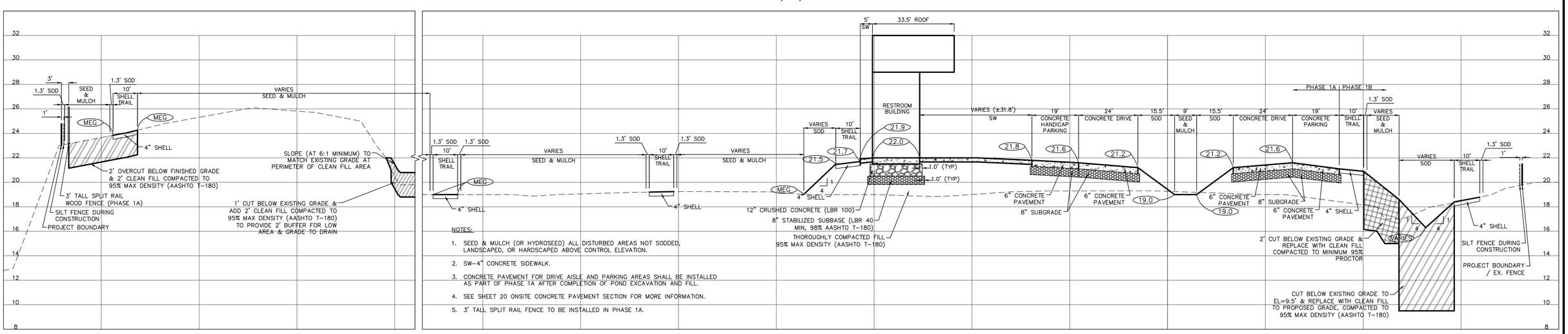

NOTES:

1. SEED & MULCH (OR HYDROSEED) ALL DISTURBED AREAS NOT SODDED, LANDSCAPED, OR HARDSCAPED ABOVE CONTROL ELEVATION.
2. SW–4" CONCRETE SIDEWALK.
3. CONCRETE PAVEMENT FOR DRIVE AISLE AND PARKING AREAS SHALL BE INSTALLED AS PART OF PHASE 1A AFTER COMPLETION OF POND EXCAVATION AND FILL.
4. SEE SHEET 20 ONSITE CONCRETE PAVEMENT SECTION FOR MORE INFORMATION.
5. 3' TALL SPLIT RAIL FENCE TO BE INSTALLED IN PHASE 1A.

H–H TYPICAL PROJECT FACILITIES NORTH–SOUTH SECTION (PHASE 1A & 1B)

1"=20' (HORIZ.)
1"=4' (VERT.)

REV NO.	REVISION	DATE	DRAWN BY / EMP. NO.	CHECKED BY / EMP. NO.
9	REV SEC E–E, F–F, G–G, H–H PER MC	4/17/23	RQS/89561	ET
8	REV SEC E–E, F–F, G–G, H–H PER MC	12/14/22	RQS/89561	ET
7	REV SEC E–E, F–F, G–G, H–H PER SMP UPDATE	11/9/22	RQS/89561	ET
6	REV SEC E–E, H–H PER SMP REVS	4/1/22	RQS/89561	ES
5	REVISE SEC. H–H WOOD FENCE LOC. PER MC	12/7/21	RQS/89561	ES
4	REVISE SEC. C–C, D–D, F–F, H–H PER MC	4/14/21	RQS/89561	EA
3	REVISION TO RESTROOM, PAVILION, AND PLAYGROUND PER MC	1/6/21	KG/101511	RQS/89561
2	REVISE SECTION H–H FENCE LOCATION, REVISE SECTION G–G ASPHALT ROADWAY	10/18/18	KG/101511	RQS/89561
1	ADD SECTION H–H, REVISE ELEV, REVISE NOTE, REVISE SECTION	8/27/18	KG/101511	RQS/89561

ACTIVITY	INITIALS/EMP. NO.	DATE
DESIGNED BY:		
DRAWN BY:		
CHECKED BY:		
CONTRACT ADMIN. BY:		
WM APPROVED BY:		

Stantec
6900 Professional Parkway East, Sarasota, FL34240-8414
Phone 941-907-6900 • Fax 941-907-6910
Certificate of Authorization #27013 • www.stantec.com

CLIENT: MANATEE BOARD OF COUNTY COMMISSIONERS

PROJECT: WASHINGTON PARK PRESERVE PHASE I

DATE: JULY 2019
HORIZONTAL SCALE:
VERTICAL SCALE:
SEC: 12 TWP: 34S RGE: 17E
CROSS REFERENCE FILE NO.:
PROJECT NUMBER: 177310895

TITLE: SECTIONS AND DETAILS

R. QUINCE SELLERS, P.E.
FLORIDA LICENSE NO. 49374
INDEX NUMBER:
SHEET NUMBER: 23 OF 28

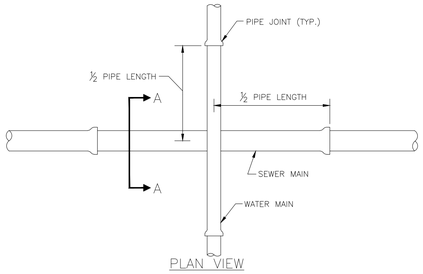

PLAN VIEW

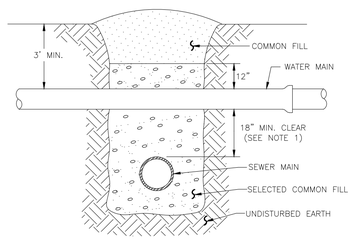

SECTION A–A

NOTES:

1. CLEARANCE MAY BE REDUCED TO 6" FOR GRAVITY SEWER WHERE WATER MAIN IS DUCTILE IRON OR 12" FOR FORCE MAIN WHERE FORCE MAIN IS ENCASED A MINIMUM OF 10' EACH SIDE OF CROSSING.
2. WHERE NO ENCASEMENT IS REQUIRED, PIPE SECTIONS SHALL BE FULL–LENGTH AND SHALL BE ADJUSTED HORIZONTALLY SO THAT THE CROSSING IS AT EACH PIPE SECTION'S MIDPOINT REGARDLESS OF THE VERTICAL CLEARANCE.
3. REFER TO THE JACK & BORE CROSSING DETAIL FOR CASING AND SPACER REQUIREMENTS.

MANATEE COUNTY PUBLIC WORKS DEPARTMENT			
REV.BY	DATE	TYPICAL NEW WATER & SEWER LINE CROSSING	UG–2
CLB/BR	11/10		
		MAY 10, 2011 DATE OF APPROVAL	PAGE 102

REQUIRED LENGTH OF RESTRAINED JOINT PIPE FOR DR-18 PVC PIPE

MAIN PIPE SIZE	HORIZ. BENDS			TEES						REDUCERS				PLUGS & VALVES
				SIZE / LENGTH						SIZE / LENGTH				
	90°	45°	22.5°											
24	90	38	18	X24 / 169	X20 / 132	X16 / 90	X12 / 38	X10 / 6		X20 / 64	X16 / 117	X12 / 158		214
20	78	32	16	X20 / 141	X16 / 101	X12 / 53	X10 / 24	X8 / 1		X16 / 65	X12 / 115	X10 / 149		184
16	66	27	13	X16 / 111	X12 / 67	X10 / 41	X8 / 12			X12 / 64	X10 / 107	X8 / 111		151
12	52	22	10	X12 / 80	X10 / 56	X8 / 31	X6 / 1			X10 / 58	X8 / 62	X6 / 86		118
10	44	18	9	X10 / 63	X8 / 40	X6 / 1				X8 / 33	X6 / 61	X4 / 81		100
8	37	15	7	X8 / 49	X6 / 18	X4 / 1				X6 / 35	X4 / 60			83
6	29	12	6	X6 / 29	X4 / 1					X4 / 33				63
4	21	8	4	X4 / 12										45

NOTES:

1. RESTRAIN 11.25° BENDS 50% OF LENGTH FOR 22.5° BENDS.
2. ALL VALVES AND FITTINGS SHALL BE RESTRAINED TO THE CONNECTINGSECTIONS OF PIPE.
3. ALL ISOLATIONVALVES MUST BE PROPERLY ANCHORED OR RESTRAINED TO RESIST A 180 PSI TEST PRESSURE IN LIEFER DIRECTION.
4. PIPE SIZES ARE GIVEN IN INCHES.
5. RESTRAINED PIPE LENGTHS ARE GIVEN IN FEET.
6. LENGTHS SHOWN ARE FOR A TEST PRESURE OF 180 PSI.
7. THE RESTRAINED LENGTHS SHOWN IN THESE TABLES ARE BASED ON SOIL CLASSIFICATION SP WITH AWWA TYPE 3 TRENCH CONDITIONS, 180 PSI TEST PRESSURE, 3 FEET OF COVER AND 1.5 FACTOR OF SAFTEY. ACTUAL BURY CONDITIONS MUST BE DETERMINED BY THE ENGINEER OF RECORD AND THE RESTRAINED LENGTHS MODIFIED ACCORDINGLY.
8. RESTRAINED LENGTHS TO BE APPLIED TO PIPELINES PER DETAIL RESTRAINED LENGTHS FOR PIPE.

MANATEE COUNTY PUBLIC WORKS DEPARTMENT			
REV.BY	DATE	RESTRAINED LENGTHS FOR PVC PIPE	UG–8
CLB/BR	11/10		
		MAY 10, 2011 DATE OF APPROVAL	PAGE 108

REQUIRED LENGTH OF RESTRAINED JOINT PIPE FOR DIP (POLY-WRAPPED)

MAIN PIPE SIZE	HORIZ. BENDS			TEES						REDUCERS				PLUGS & VALVES
				SIZE / LENGTH						SIZE / LENGTH				
	90°	45°	22.5°											
36	142	59	28	X36 / 393	X30 / 318	X24 / 232	X20 / 169	X16 / 84	X12 / 1	X30 / 137	X24 / 247	X20 / 308	X16 / 359	453
30	124	51	25	X30 / 333	X24 / 252	X20 / 189	X16 / 115	X12 / 33	X10 / 1	X24 / 137	X20 / 213	X16 / 276		391
24	106	44	21	X24 / 270	X20 / 211	X16 / 143	X12 / 61	X10 / 10	X8 / 1	X20 / 98	X16 / 178	X12 / 241		327
20	92	38	18	X20 / 225	X16 / 161	X12 / 85	X10 / 39	X8 / 1		X16 / 98	X12 / 176	X10 / 227		280
16	77	32	15	X16 / 177	X12 / 101	X10 / 65	X8 / 19	X6 / 1		X12 / 98	X10 / 163	X8 / 169		231
12	61	25	12	X12 / 127	X10 / 89	X8 / 50	X6 / 1			X10 / 88	X8 / 96	X6 / 131		181
10	52	22	10	X10 / 101	X8 / 64	X6 / 11				X8 / 51	X6 / 94	X4 / 125		153
8	44	18	9	X8 / 78	X6 / 30	X4 / 1				X6 / 54	X4 / 92			128
6	34	14	7	X6 / 46	X4 / 1					X4 / 50				98
4	24	10	5	X4 / 19										69

REQUIRED LENGTH OF RESTRAINED JOINT PIPE FOR DIP (NON-WRAPPED)

MAIN PIPE SIZE	HORIZ. BENDS			TEES						REDUCERS				PLUGS & VALVES
				SIZE / LENGTH						SIZE / LENGTH				
	90°	45°	22.5°											
36	100	42	20	X36 / 163	X30 / 132	X24 / 96	X20 / 68	X16 / 35	X12 / 1	X30 / 57	X24 / 103	X20 / 128	X16 / 149	188
30	88	37	18	X30 / 138	X24 / 104	X20 / 78	X16 / 48	X12 / 10	X10 / 1	X24 / 57	X20 / 88	X16 / 114		162
24	75	31	15	X24 / 112	X20 / 87	X16 / 59	X12 / 25	X10 / 4	X8 /	X20 / 40	X16 / 74	X12 / 100		135
20	65	27	13	X20 / 93	X16 / 67	X12 / 35	X10 / 16	X8 / 1		X16 / 41	X12 / 73	X10 / 94		116
16	54	22	11	X16 / 73	X12 / 44	X10 / 27	X8 / 8	X6 / 1		X12 / 41	X10 / 68	X8 / 70		96
12	43	18	8	X12 / 53	X10 / 37	X8 / 21	X6 / 1			X10 / 37	X8 / 40	X6 / 54		75
10	37	15	7	X10 / 42	X8 / 26	X6 / 5				X8 / 21	X6 / 39	X4 / 52		63
8	30	13	6	X8 / 32	X6 / 12	X4 / 1				X6 / 22	X4 / 38			53
6	24	10	5	X6 / 19	X4 / 1					X4 / 21				41
4	17	7	3	X4 / 8										29

NOTE:

SEE RESTRAINED LENGTHS FOR PVC PIPE DETAIL FOR NOTES 1 THROUGH 8 THAT ARE ALSO APPLICABLE TO RESTRAINED LENGTHS FOR DIP.

MANATEE COUNTY PUBLIC WORKS DEPARTMENT			
REV.BY	DATE	RESTRAINED LENGTHS FOR DIP	UG–9
CLB/BR	11/10		
		MAY 10, 2011 DATE OF APPROVAL	PAGE 109

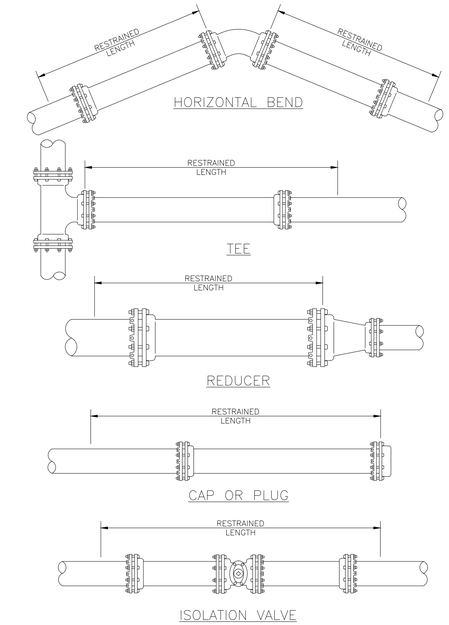

MANATEE COUNTY PUBLIC WORKS DEPARTMENT			
REV.BY	DATE	RESTRAINED LENGTHS FOR PIPE	UG–10
CLB/BR	11/10		
		MAY 10, 2011 DATE OF APPROVAL	PAGE 110

NOTES:

1. USE OF TYPE A–2 AND A–3 PIPE BEDDING TO BE DETERMINED IN THE FIELD BY THE ENGINEER.
2. PROVIDE ADEQUATE CLEARANCE TO PLACE AND COMPACT STAGE 1 BEDDING MATERIAL IN TRENCH AREA BELOW PIPE SPRINGLINE. PIPE EMBEDMENT MUST BE COMPACTED OUT TO THE TRENCH WALL OR 2.5 TIMES THE PIPE OD, WHICHEVER IS LESS.
3. TYPICALLY 4" TO 6".
4. PIPE INSTALLATION SHALL BE IN ACCORDANCE WITH THE MANUFACTURER'S WRITTEN INSTRUCTIONS.
5. TRACER WIRE NOT REQUIRED FOR GRAVITY SEWERS.

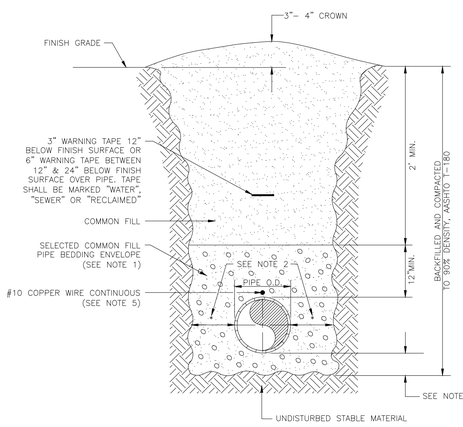

MANATEE COUNTY PUBLIC WORKS DEPARTMENT			
REV.BY	DATE	TRENCH WITH UNIMPROVED SURFACE TYPE A–1 PIPE BEDDING	UG–11
WRT/KE	03/11		
		MAY 10, 2011 DATE OF APPROVAL	PAGE 111

NOTES:

1. USE OF TYPE A–2 AND A–3 PIPE BEDDING TO BE DETERMINED IN THE FIELD BY THE ENGINEER.
2. PROVIDE ADEQUATE CLEARANCE TO PLACE AND COMPACT STAGE 1 BEDDING MATERIAL IN TRENCH AREA BELOW PIPE SPRINGLINE. PIPE EMBEDMENT MUST BE COMPACTED OUT TO THE TRENCH WALL OR 2.5 TIMES THE PIPE OD, WHICHEVER IS LESS.
3. TYPICALLY 4" TO 6".
4. PIPE INSTALLATION SHALL BE IN ACCORDANCE WITH THE MANUFACTURER'S WRITTEN INSTRUCTIONS.
5. THICKNESS TO MATCH EXISTING OR BE 6" MINIMUM, WHICHEVER IS GREATER.
6. SHEETING ORDERED LEFT IN PLACE TO BE CUT OFF 24" BELOW FINISH GRADE OR 12" BELOW SUBGRADE.
7. BASE SHALL BE COMPACTED 6" MINIMUM THICKNESS OF APPROVED MATERIAL.
8. DRIVEWAYS SHALL BE CONSTRUCTED IN ACCORDANCE WITH THE LATEST ADOPTED CONSTRUCTION STANDARDS OF THE MANATEE COUNTY TRANSPORTATION DEPARTMENT.
9. IF THE DRIVEWAY IS 12' OR WIDER, SAWCUT AN EXPANSION JOINT ALONG THE CENTER OF THE DRIVEWAY (3/16" WIDE AND 1½" DEEP) AFTER THE CONCRETE HAS SET.
10. IF THERE IS AN EXISTING EXPANSION JOINT WITHIN 3' OF THE PROPOSED JOINT, EXTEND DRIVEWAY REPLACEMENT TO THE EXISTING JOINT.
11. TRACER WIRE NOT REQUIRED FOR GRAVITY SEWERS.

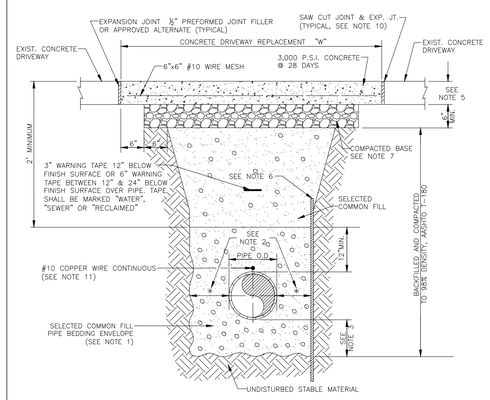

MANATEE COUNTY PUBLIC WORKS DEPARTMENT			
REV.BY	DATE	TRENCH WITH CONCRETE DRIVEWAY SURFACE TYPE A–1 PIPE BEDDING	UG–14
CLB/BR	11/10		
		MAY 10, 2011 DATE OF APPROVAL	PAGE 114

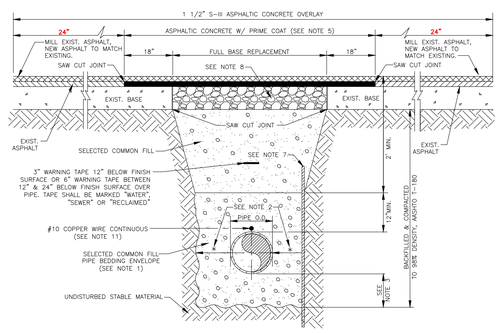

TRENCH WITH ASPHALT PAVEMENT SURFACE TYPE A–1 PIPE BEDDING

					ACTIVITY	INITIALS/EMP. NO.	DATE
					DESIGNED BY:	JS	10/18/18
					DRAWN BY:	KG	10/18/18
2	BORDER REMOVED FROM MODIFIED DETAIL	10/18/18	KG/101511	RQS/89561	CHECKED BY:	SCM	10/18/18
1	DENSITY REQUIREMENT REVISED TO MATCH STANDARD DETAIL	10/18/18	KG/101511	RQS/89561	CONTRACT ADMIN. BY:		
△REV NO.	REVISION	DATE	DRAWN BY / EMP. NO.	CHECKED BY / EMP. NO.	WM APPROVED BY:		

Stantec
6900 Professional Parkway East, Sarasota, FL34240-8414
Phone 941-907-6900 • Fax 941-907-6910
Certificate of Authorization #27013 • www.stantec.com

CLIENT: MANATEE BOARD OF COUNTY COMMISSIONERS

PROJECT: WASHINGTON PARK PRESERVE PHASE I

DATE: JULY 2019
HORIZONTAL SCALE:
VERTICAL SCALE:
SEC: 12 TWP: 34S RGE: 17E
CROSS REFERENCE FILE NO.:
PROJECT NUMBER: 177310895

TITLE: UTILITY DETAILS GENERAL CONSTRUCTION

R. QUINCE SELLERS, P.E.
FLORIDA LICENSE NO. 49374

INDEX NUMBER:

SHEET NUMBER: 24 OF 28

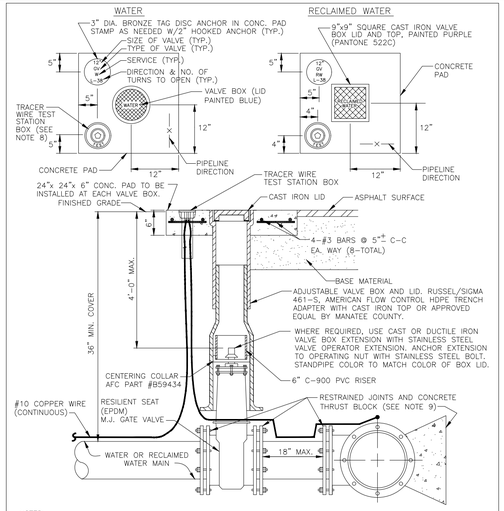

NOTES:

1. "WV" OR "RWV" TO BE IMPRESSED INTO THE NEWLY-POURED CONCRETE CURB, ALONG WITH DISTANCE IN FEET TO THE VALVE. IF NO CURB, INSTALL A BLUE DISC WITH "WV" OR PURPLE DISC WITH "RWV" AND A 1/8"x1" GALVANIZED STEEL SCREW IN THE EDGE OF PAVEMENT WITH THE FOOTAGE FROM THE DISC TO THE VALVE.
2. ALL EXISTING AND PROPOSED VALVE BOXES SHALL BE ADJUSTED TO FINISHED GRADES AS DETERMINED IN THE FIELD.
3. WATER VALVES SHALL NOT BE PLACED IN HANDICAPPED RAMPS.
4. PRECAST CONCRETE PADS & THRUST BLOCKS SHALL NOT BE USED.
5. ALL EXPOSED EDGES OF CONCRETE SHALL BE CHAMFERED 1/2".
6. FOR VALVES 16" AND LARGER, USE BUTTERFLY VALVES.
7. PIPELINE DIRECTION TO BE IMPRESSED INTO NEWLY POURED CONCRETE PAD.
8. TRACER WIRE TEST STATION BOX IS NOT REQUIRED IN VALVE BOX PAD IF THE GATE VALVE IS LOCATED WITHIN 200 FEET OF A WATER SERVICE, BLOW-OFF, BACKFLOW PREVENTER OR FIRE HYDRANT THAT HAS A TRACER WIRE BOX.
9. WHERE THRUST BLOCK NOT USED, RESTRAINED JOINTS MUST THEN EXTEND FROM TEE FULL LENGTH SPECIFIED FOR "TEES."
10. BINGHAM & TAYLOR P20ONFG FOR NORMAL YARD SERVICE. WHERE VALVE WILL BE IN STREET OR PARKING UNDER VEHICLE TRAFFIC, USE PS25RD CENTERED IN SEPARATE CONCRETE PAD SIMILAR TO STANDARD VALVE BOX PAD.

MANATEE COUNTY PUBLIC WORKS DEPARTMENT			
REV.BY	DATE	GATE VALVE, BOX, LID AND TAG	UW-2
CLB/KE	11/10		
		MAY 10, 2011 DATE OF APPROVAL	PAGE 120

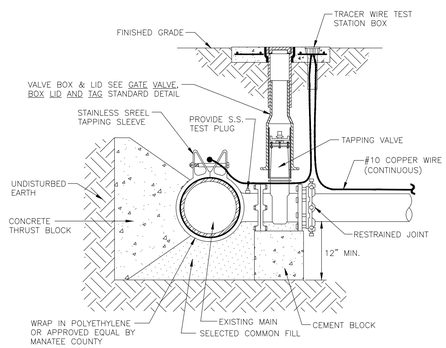

ELEVATION

NOTES:

1. PRIOR TO TAPPING, CONTRACTOR TO DEMONSTRATE 60 MINUTE HYDROSTATIC TEST OF THE TAPPING SLEEVE AND VALVE WITH NO LOSS OF 180 PSI PRESSURE FOR WATER AND RECLAIMED WATER OR 150 PSI FOR FORCE MAIN.
2. ALL FITTINGS TO BE WRAPPED WITH 20 MIL VISQUEEN AT THRUST BLOCK.
3. ALL TAPS ON CONCRETE WATER MAINS AND LARGER THAN 12" ARE TO BE MADE BY A MANATEE COUNTY APPROVED TAPPING COMPANY. ALL MATERIALS TO BE SUPPLIED BY THE CONTRACTOR.
4. ALL TAPS MUST BE OF A SMALLER SIZE THAN THE MAIN BEING TAPPED & PLACED NO CLOSER THAN 30" OR A DISTANCE EQUAL TO (1) MAIN PIPE DIAMETER PLUS (2) TAP PIPE DIAMETERS (WHICHEVER IS GREATER) FROM A JOINT OR FITTING.
5. CONTRACTOR TO SUPPLY A DRY HOLE FOR TAPPING CREW TO WORK IN AND A BACK-HOE TO LOWER TAPPING MACHINE INTO THE HOLE.
6. WHERE THRUST BLOCK NOT USED, RESTRAINED JOINTS MUST THEN EXTEND FROM TEE FULL LENGTH SPECIFIED FOR "TEES."
7. TRACER WIRE TEST STATION BOX IS REQUIRED AT CONNECTIONS TO EXISTING MAINS.

MANATEE COUNTY PUBLIC WORKS DEPARTMENT			
REV.BY	DATE	TAPPING SLEEVE AND VALVE	UW-4
CLB/KE	11/10		
		MAY 10, 2011 DATE OF APPROVAL	PAGE 122

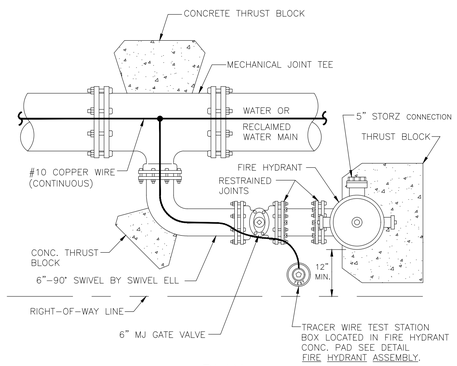

PLAN

NOTE:

1. THIS DETAIL FOR USE ONLY WHEN THE WATER MAIN IS LOCATED TOO CLOSE TO THE RIGHT-OF-WAY LINE TO USE THE FIRE HYDRANT ASSEMBLY DETAIL.
2. SEE STANDARD DETAIL GATE VALVE, BOX, LID AND TAG.

MANATEE COUNTY PUBLIC WORKS DEPARTMENT			
REV.BY	DATE	FIRE HYDRANT WITH LOCKED 90° BEND	UW-6
CLB/KE	11/10		
		MAY 10, 2011 DATE OF APPROVAL	PAGE 124

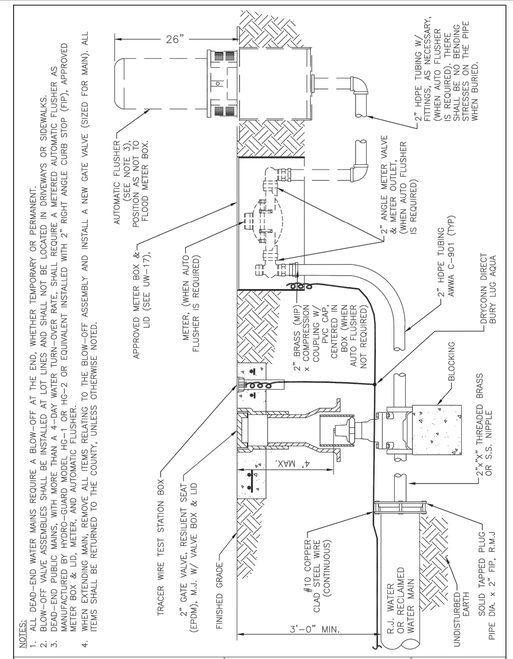

NOTES:

1. ALL DEAD-END WATER MAINS REQUIRE A BLOW-OFF AT THE END, WHETHER TEMPORARY OR PERMANENT.
2. BLOW-OFF VALVE ASSEMBLIES SHALL BE INSTALLED AT LOT LINES AND SHALL NOT BE LOCATED IN DRIVEWAYS OR SIDEWALKS.
3. AUTOMATIC FLUSHER TO BE INSTALLED ON THE BLOW-OFF ASSEMBLY. AUTOMATIC FLUSHER AS MANUFACTURED BY HYDRO-GUARD MODEL HG-1 OR HG-2 OR EQUIVALENT INSTALLED WITH 2" RIGHT ANGLE CURB STOP (FIP), APPROVED METER BOX & LID, METER, AND AUTOMATIC FLUSHER.
4. WHEN EXTENDING MAIN, REMOVE ALL ITEMS RELATING TO THE BLOW-OFF ASSEMBLY AND INSTALL A NEW GATE VALVE (SIZED FOR MAIN). ALL ITEMS SHALL BE RETURNED TO THE COUNTY, UNLESS OTHERWISE NOTED.

MANATEE COUNTY PUBLIC WORKS DEPARTMENT			
REV.BY	DATE	2" BLOW-OFF ASSEMBLY FOR 10" MAINS AND SMALLER	UW-7
		DATE OF APPROVAL	

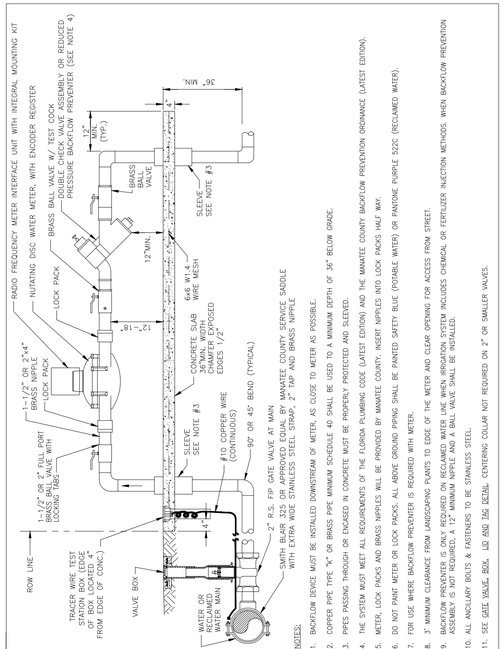

NOTES:

1. BACKFLOW DEVICE MUST BE INSTALLED DOWNSTREAM OF METER, AS CLOSE TO METER AS POSSIBLE.
2. COPPER PIPE TYPE "K" OR BRASS PIPE MINIMUM SCHEDULE 40 SHALL BE USED TO A MINIMUM DEPTH OF 36" BELOW GRADE.
3. PIPES PASSING THROUGH OR ENCASED IN CONCRETE MUST BE PROPERLY PROTECTED AND SLEEVED.
4. THE SYSTEM MUST MEET ALL REQUIREMENTS OF THE FLORIDA PLUMBING CODE (LATEST EDITION) AND THE MANATEE COUNTY BACKFLOW PREVENTION ORDINANCE (LATEST EDITION).
5. METER, LOCK PACKS AND BRASS NIPPLES WILL BE PROVIDED BY MANATEE COUNTY. INSERT NIPPLES INTO LOCK PACKS HALF WAY.
6. DO NOT PAINT METER OR LOCK PACKS. ALL ABOVE GROUND PIPING SHALL BE PAINTED SAFETY BLUE (POTABLE WATER) OR PANTONE PURPLE 522C (RECLAIMED WATER).
7. FOR USE WHERE BACKFLOW PREVENTER IS REQUIRED WITH METER.
8. 3" MINIMUM CLEARANCE FROM LANDSCAPING PLANTS TO EDGE OF THE METER AND CLEAR OPENING FOR ACCESS FROM STREET.
9. BACKFLOW PREVENTER IS ONLY REQUIRED ON RECLAIMED WATER LINE WHEN IRRIGATION SYSTEM INCLUDES CHEMICAL OR FERTILIZER INJECTION METHODS. WHEN BACKFLOW PREVENTION ASSEMBLY IS NOT REQUIRED, A 12" MINIMUM NIPPLE AND A BALL VALVE SHALL BE INSTALLED.
10. ALL ANCILLARY BOLTS & FASTENERS TO BE STAINLESS STEEL.
11. SEE GATE VALVE, BOX, LID AND TAG DETAIL. CENTERING COLLAR NOT REQUIRED ON 2" OR SMALLER VALVES.

MANATEE COUNTY PUBLIC WORKS DEPARTMENT			
REV.BY	DATE	1½" & 2" METER AND BACKFLOW PREVENTER	UW-13
CLB/BR	11/10		
		MAY 10, 2011 DATE OF APPROVAL	PAGE 131

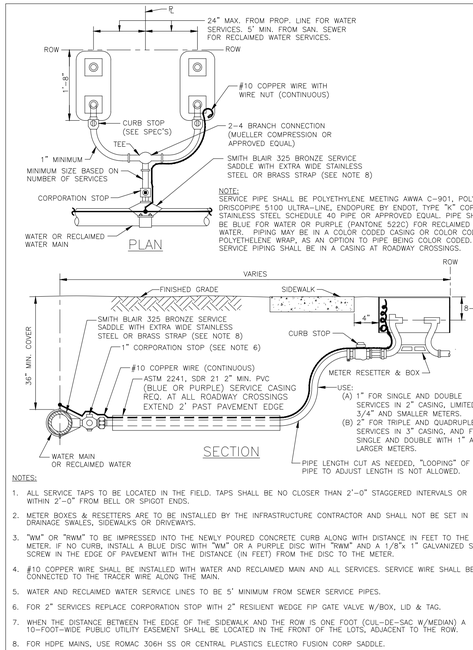

NOTES:

1. ALL SERVICE TAPS TO BE LOCATED IN THE FIELD. TAPS SHALL BE NO CLOSER THAN 2'-0" STAGGERED INTERVALS OR WITHIN 2'-0" FROM BELL OR SPIGOT ENDS.
2. METER BOXES & RESETTERS ARE TO BE INSTALLED BY THE INFRASTRUCTURE CONTRACTOR AND SHALL NOT BE SET IN DRAINAGE SWALES, SIDEWALKS OR DRIVEWAYS.
3. "WM" OR "RWM" TO BE IMPRESSED INTO THE NEWLY POURED CONCRETE CURB ALONG WITH DISTANCE IN FEET TO THE METER. IF NO CURB, INSTALL A BLUE DISC WITH "WM" OR A PURPLE DISC WITH "RWM" AND A 1/8"x 1" GALVANIZED STEEL SCREW IN THE EDGE OF PAVEMENT WITH THE DISTANCE (IN FEET) FROM THE DISC TO THE METER.
4. #10 COPPER WIRE SHALL BE INSTALLED WITH WATER AND RECLAIMED MAIN AND ALL SERVICES. SERVICE WIRE SHALL BE CONNECTED TO THE TRACER WIRE ALONG THE MAIN.
5. WATER AND RECLAIMED WATER SERVICE LINES TO BE 5' MINIMUM FROM SEWER SERVICE PIPES.
6. FOR 2" SERVICES REPLACE CORPORATION STOP WITH 2" RESILIENT WEDGE FIP GATE VALVE W/BOX, LID & TAG.
7. WHEN THE DISTANCE BETWEEN THE EDGE OF THE SIDEWALK AND THE ROW IS ONE FOOT (CUL-DE-SAC W/MEDIAN) A 10-FOOT-WIDE PUBLIC UTILITY EASEMENT SHALL BE LOCATED IN THE FRONT OF THE LOTS, ADJACENT TO THE ROW.
8. FOR HDPE MAINS, USE ROMAC 306H SS OR CENTRAL PLASTICS ELECTRO FUSION CORP SADDLE.

MANATEE COUNTY PUBLIC WORKS DEPARTMENT			
REV.BY	DATE	TYPICAL SERVICE CONNECTION	UW-19
CLB/BR	11/10		
		MAY 10, 2011 DATE OF APPROVAL	PAGE 137

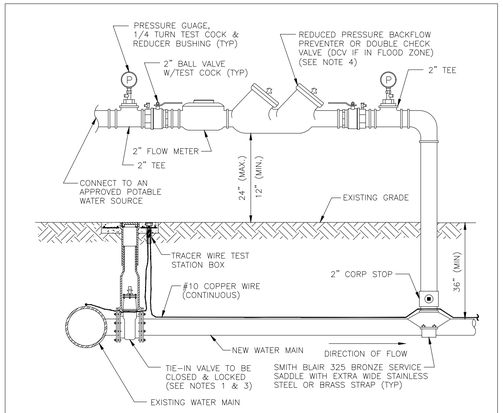

PROFILE

NOTES:

1. FOR TIE-IN VALVE, SEE DETAIL UW-4 FOR TAPPING SLEEVE VALVE, DETAIL UW-2 FOR GATE VALVE AND DETAIL UW-3 FOR BUTTERFLY VALVE.
2. CORPORATION STOP CONNECTIONS TO WATER MAINS SHALL BE AT A SUFFICIENT DISTANCE FROM NEW TAPPING SLEEVE & VALVE (TIE-IN VALVE). ALL CORPORATION STOP TAPS SHALL BE PLACED NO CLOSER THAN 30" OR A DISTANCE EQUAL TO (1) MAIN PIPE DIAMETER PLUS (2) TAP DIAMETERS (WHICHEVER IS LARGER) FROM THE NEW TIE-IN VALVE (TAPPING VALVE & SLEEVE). A CROSS MAY BE INSTALLED IF THE EXISTING WATER MAIN IS NOT LARGER THAN THE NEW WATER MAIN.
3. IF THE EXISTING WATER MAIN IS LOCATED UNDER PAVEMENT OR CLOSE TO THE ROADWAY, BOTH JUMPER CORPORATION STOPS MAY CONNECT TO THE NEW WATER MAIN LOCATED OUTSIDE OF THE PAVEMENT. AN ADDITIONAL GATE VALVE OR BUTTERFLY VALVE SHALL BE INSTALLED AND THE VALVE MAY BE LOCATED AT THE ROW LINE. PIPING AND APPURTENANCES BETWEEN THE EXISTING MAIN AND ISOLATION VALVE AND JUMPER SHALL BE DISINFECTED BY SPRAYING OR SWABBING.
4. BACKFLOW PREVENTER SHALL BE STRUCTURALLY SUPPORTED.
5. SEE DETAIL UW-22 FOR ADDITIONAL JUMPER CONNECTION NOTES.

MANATEE COUNTY PUBLIC WORKS DEPARTMENT			
REV.BY	DATE	TEMPORARY JUMPER CONNECTION	UW-21
WT/KE	01/11		
		MAY 10, 2011 DATE OF APPROVAL	PAGE 139

1. A temporary jumper connection is required at all connections between existing active potable water mains and proposed new water main improvements with the following exceptions:
   A. Projects that include a permanent backflow preventer at the right-of-way which is adjacent to the existing water main;
   B. Projects that include new water mains that are less than or equal to 18 linear feet in length; or
   C. Other proposed cases that are approved by Manatee County and the construction drawings specifically state that a temporary jumper connection is not required.
2. A temporary jumper shall be used and be connected to an approved potable water source (e.g., existing fire hydrant, existing main, existing service tap or tank truck, etc.) as shown in the standard temporary jumper detail UW-21. A temporary jumper shall be used for filling, flushing and for disinfection of any new main of any size. The jumper connection shall be maintained until after the filling, flushing, testing and disinfection of the new main has been successfully completed and clearance for use from the Florida Department of Environmental Protection (FDEP) or the Florida Department of Health (FDOH) has been obtained.
3. Locations and orientation of jumpers associated with connections to existing water mains that are located under the roadway pavement shall be approved on a case-by-case basis.
4. Pipe and fittings used for connecting the new pipe to the existing pipe shall be disinfected prior to installation in accordance with AWWA C651, latest edition. Unless approved otherwise, the tapping sleeve, and exterior of the existing main to be tapped, piping within the jumper, and new piping shown on standard temporary jumper detail UW-21 shall be disinfected by spraying or swabbing per Section 4.6 of AWWA C651.
5. A separate and successful hydrostatic test on the new system shall occur between the tie-in valve and the closest downstream gate valve or butterfly valve before performing a hydrostatic test on the remainder of the newly-constructed water main. The tie-in valve and the closest downstream gate valve or butterfly valve shall be closed during the hydrostatic test of the remainder of the newly constructed water main.
6. The jumper shall include a flow meter to ensure that the flow from the supply source is at a constant measured rate while chlorinating the new main. The chlorine concentration shall be measured at regular intervals to ensure that it is fed at a constant rate of not less than 25 milligrams per liter (mg/L) of free chlorine.
7. The jumper connection shall also be used to maintain a minimum pressure of 20 psi in the new mains continuously after disinfection and until FDEP/FDOH clearance letter is obtained.
8. All temporary backflow devices or "jumpers" utilized during pipeline construction must show certification that they have been tested annually according to the Florida Building Code, Plumbing Section, Chapter 3, Section 312.9.1, 312.9.2, Chapter 6, Section 608, and Resolution R87-125. Annual certification must be valid at time of installation and provided to the Manatee County Inspector upon request.
9. Except as required to flush lines greater than 6 inches in diameter, the lockable tie-in valve shall remain closed and shall be locked in the closed position by Manatee County. The tie-in valve shall remain closed and locked until the new system has been cleared for use by the FDEP/FDOH and all other pertinent agencies.
10. After receipt of clearance for use by FDEP/FDOH, Manatee County, and all other pertinent agencies, the Contractor shall remove the temporary jumper connection. The corporation stops are to be closed and plugged with 2-inch brass or PVC stops.
11. All installation and maintenance of the temporary jumper connection and associated backflow prevention device, flow meter, fittings, valves, etc., shall be the responsibility of the Contractor.
12. The tie-in valve shall remain closed if the potable water source is a tank truck.

MANATEE COUNTY PUBLIC WORKS DEPARTMENT			
REV.BY	DATE	TEMPORARY JUMPER CONNECTION NOTES	UW-22
JAA/JEA	02/09		
		MAY 10, 2011 DATE OF APPROVAL	PAGE 140

△REV NO.	REVISION	DATE	DRAWN BY / EMP. NO.	CHECKED BY / EMP. NO.
3	SHEET LAYOUT REVISED	10/18/18	KG/101511	RQS/89561
2	SERVICE CONNECTION DETAIL ADDED	10/18/18	KG/101511	RQS/89561
1	FIRE HYDRANT DETAIL REPLACED	10/18/18	KG/101511	RQS/89561

ACTIVITY	INITIALS/EMP. NO.	DATE
DESIGNED BY:	JS	10/18/18
DRAWN BY:	KG	10/18/18
CHECKED BY:	SCM	10/18/18
CONTRACT ADMIN. BY:		
WM APPROVED BY:		

Stantec
6900 Professional Parkway East, Sarasota, FL34240-8414
Phone 941-907-6900 • Fax 941-907-6910
Certificate of Authorization #27013 • www.stantec.com

CLIENT: MANATEE BOARD OF COUNTY COMMISSIONERS

PROJECT: WASHINGTON PARK PRESERVE PHASE I

DATE: JULY 2019
HORIZONTAL SCALE:
VERTICAL SCALE:
SEC: 12 TWP: 34S RGE: 17E
CROSS REFERENCE FILE NO.:
PROJECT NUMBER: 177310895

TITLE: UTILITY DETAILS WATER DISTRIBUTION

R. QUINCE SELLERS, P.E. FLORIDA LICENSE NO. 49374
INDEX NUMBER:
SHEET NUMBER: 25 OF 28

Saved: 4/16/2021 11:46 AM QSELLERS | Plotted: 4/18/2023 8:44:05 AM QSELLERS | V:\177310895\05_report_edit\drawing_design\cad_fig\sheet\177310895-01C-024.dwg

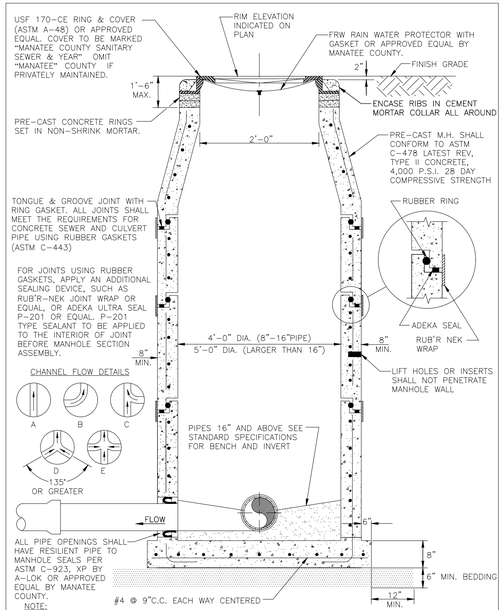

NOTE:

DROP MANHOLES, MANHOLES WITH OPPOSING FLOW (DETAILS D & E), MANHOLES IMMEDIATELY UPSTREAM OF A LIFT STATION WET WELL, MANHOLES WITH GRAVITY SEWERS GREATER THAN 12 INCHES IN DIAMETER, MANHOLES RECEIVING A FORCE MAIN AND THE FIRST TWO GRAVITY MANHOLES DOWNSTREAM OF MANHOLES RECEIVING A FORCE MAIN SHALL HAVE AN APPROVED LINER.

MANATEE COUNTY PUBLIC WORKS DEPARTMENT		STANDARD PRE-CAST SANITARY SEWER MANHOLE FOR UNDISTURBED FLOW	US-2
REV.BY	DATE		
WRT/KE	04/11	MAY 10, 2011 DATE OF APPROVAL	PAGE 142

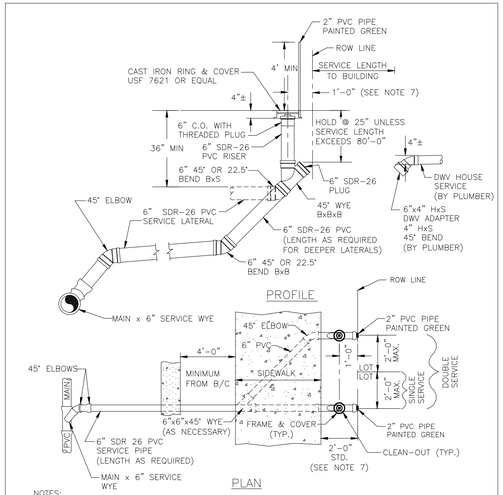

NOTES:

1. RUBBER DONUTS ARE NOT TO BE USED.
2. "SCO" TO BE IMPRESSED INTO THE NEWLY-POURED CONCRETE CURB, ALONG WITH DISTANCE IN FEET TO THE CLEAN-OUT. IF NO CURB INSTALL A GREEN DISC WITH "SCO" AND ⅛" X 1" GALVANIZED STEEL SCREW IN THE EDGE OF PAVEMENT WITH THE FOOTAGE FROM THE DISC TO THE CLEAN-OUT.
3. SANITARY SEWER CLEAN-OUTS SHALL NOT BE LOCATED IN DRAINAGE SWALES, EASEMENTS, SIDEWALKS OR DRIVEWAYS.
4. NO SERVICE CONNECTIONS TO BE MADE TO THE CLEAN-OUT RISER. ALL DOMESTIC CONNECTIONS SHALL BE MADE TO THE STUB-OUT PROVIDED.
5. SEWER SERVICE SHALL BE 5" MIN. FROM WATER SERVICE OR FIRE HYDRANT.
6. CLEAN-OUT ADAPTER TO BE SOLVENT-WELDED TO RISER TOP. CLEAN-OUT THREADS SHALL BE WRAPPED WITH TEFLON PLUMBERS TAPE TO SEAL PLUG WATERTIGHT.
7. WHEN THE DISTANCE BETWEEN THE EDGE OF THE SIDEWALK & THE ROW LINE IS ONE FOOT (CUL-DE-SAC W/MEDIAN) THE DISTANCE BETWEEN THE CENTER OF THE CO RISER & THE ROW LINE SHALL BE 6".

MANATEE COUNTY PUBLIC WORKS DEPARTMENT		SINGLE AND DOUBLE SERVICE CONNECTION	US-13
REV.BY	DATE		
CLB/DOM	11/10	MAY 10, 2011 DATE OF APPROVAL	PAGE 153

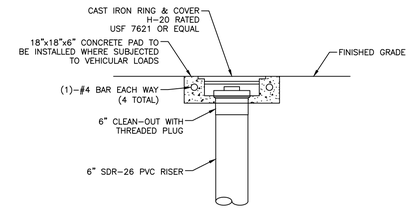

SANITARY SEWER CLEAN-OUT COLLAR

△REV NO.	REVISION	DATE	DRAWN BY / EMP. NO.	CHECKED BY / EMP. NO.

ACTIVITY	INITIALS/EMP. NO.	DATE
DESIGNED BY:	JS	10/18/18
DRAWN BY:	KG	10/18/18
CHECKED BY:	SCM	10/18/18
CONTRACT ADMIN. BY:		
WM APPROVED BY:		

Stantec
6900 Professional Parkway East, Sarasota, FL34240-8414
Phone 941-907-6900 • Fax 941-907-6910
Certificate of Authorization #27013 • www.stantec.com

CLIENT: MANATEE BOARD OF COUNTY COMMISSIONERS

PROJECT: WASHINGTON PARK PRESERVE PHASE I

DATE: JULY 2019

HORIZONTAL SCALE:

VERTICAL SCALE:

SEC: 12 TWP: 34S RGE: 17E

CROSS REFERENCE FILE NO.:

TITLE: UTILITY DETAILS SANITARY SEWER

PROJECT NUMBER: 177310895

R. QUINCE SELLERS, P.E. FLORIDA LICENSE NO. 49374

INDEX NUMBER:

SHEET NUMBER: 26 OF 28

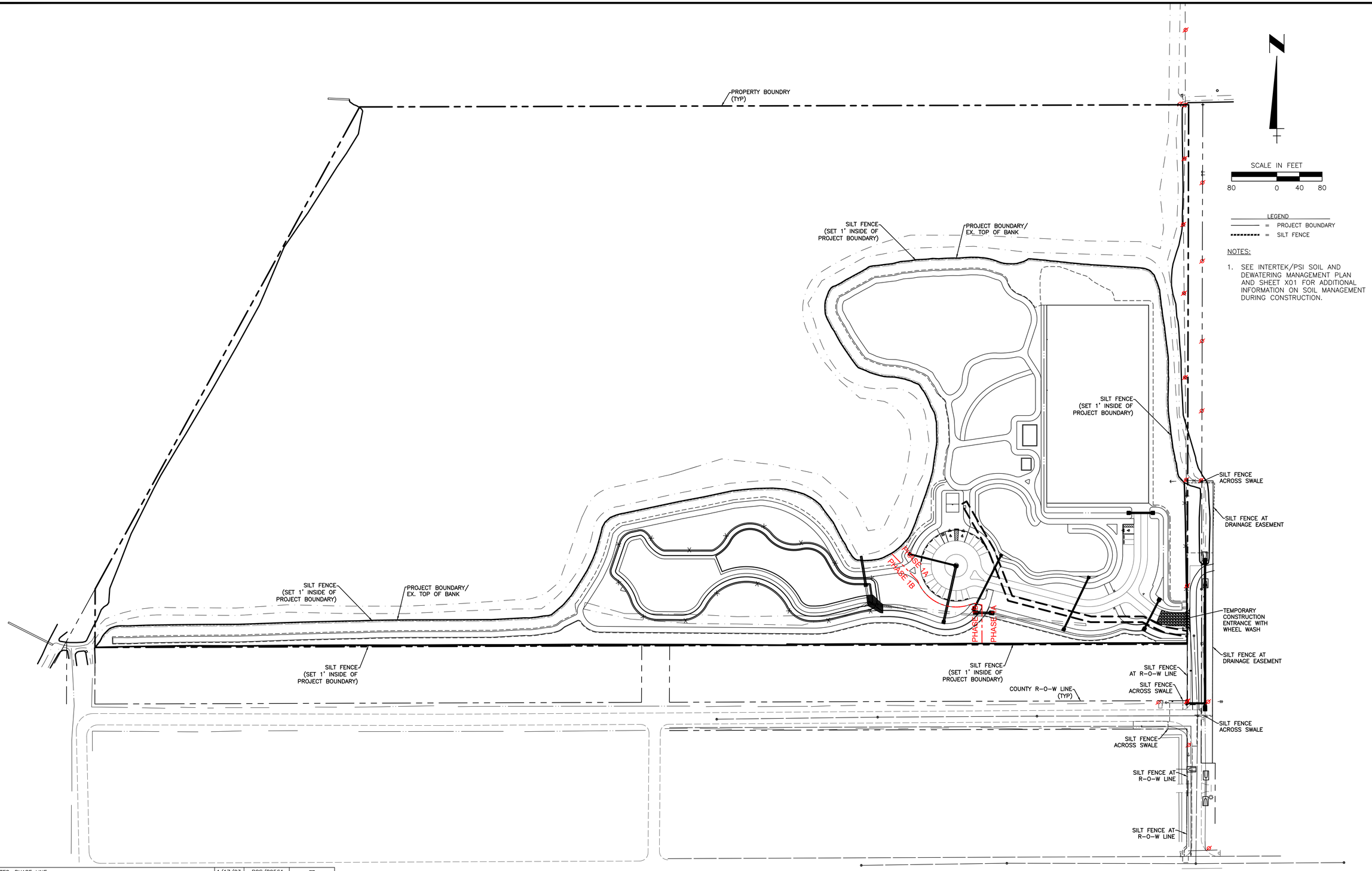

△REV NO.	REVISION	DATE	DRAWN BY / EMP. NO.	CHECKED BY / EMP. NO.
9	REV NOTES, PHASE LINE	4/17/23	RQS/89561	ET
8	ADD TEMP CONST ENT, PHASE LINE, NOTE.	12/14/22	RQS/89561	ET
5	REV RR/SW LOCATION, ADD TRANSFORMER PAD, FPL EASEMENT	6/21/22	RQS/89561	ET
4	REVISION TO INTERNAL LIMIT OF CONSTRUCTION PER MC	4/14/21	RQS/89561	EA
3	REVISION TO RESTROOM, PAVILION, AND PLAYGROUND PER MC	1/6/21	KG/101511	RQS/89561
2	ADD TEMPORARY CONSTRUCTION ENTRANCE	9/21/18	RB/115155	
1	REVISE SILT FENCE LOCATION	9/05/18	RB/115155	

ACTIVITY	INITIALS/EMP. NO.	DATE
DESIGNED BY:		
DRAWN BY:		
CHECKED BY:		
CONTRACT ADMIN. BY:		
WM APPROVED BY:		

Stantec
6900 Professional Parkway East, Sarasota, FL34240-8414
Phone 941-907-6900 ♦ Fax 941-907-6910
Certificate of Authorization #27013 ♦ www.stantec.com

CLIENT: MANATEE BOARD OF COUNTY COMMISSIONERS

PROJECT: WASHINGTON PARK PRESERVE PHASE I

DATE: JULY 2019

HORIZONTAL SCALE:

VERTICAL SCALE:

SEC: 12 TWP: 34S RGE: 17E

CROSS REFERENCE FILE NO.:

PROJECT NUMBER: 177310895

TITLE: BEST MANAGEMENT PRACTICES PLAN

R. QUINCE SELLERS, P.E.
FLORIDA LICENSE NO. 49374

INDEX NUMBER:

SHEET NUMBER: 27 OF 28

Saved: 4/18/2023 8:03 AM QSELLERS | Plotted: 4/18/2023 8:44:24 AM QSELLERS | V:\1737\active\177310895\05_report_deliv\drawing_design\cad_fig\sheet\177310895-01C-027.dwg

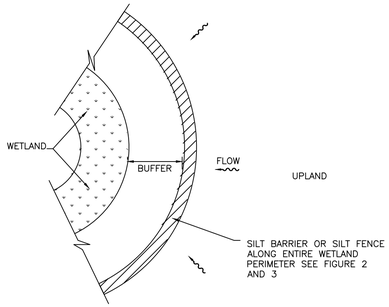

WETLAND BUFFER

N.T.S.

FIGURE 1

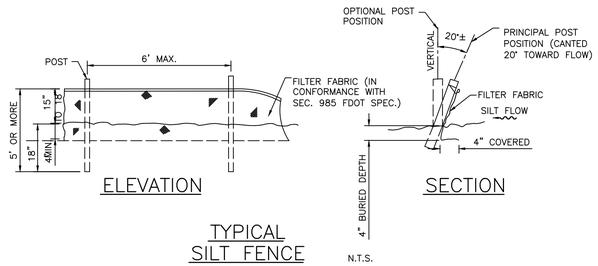

TYPICAL SILT FENCE

N.T.S.

FIGURE 2

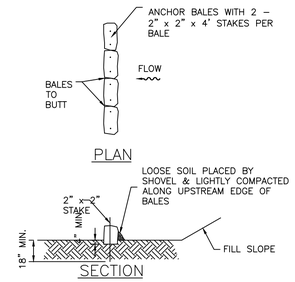

TYPICAL BALE SILT BARRIER

N.T.S.

FIGURE 3

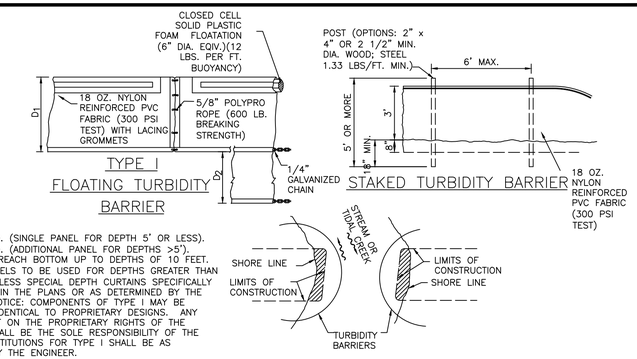

D_1 = 5' STD. (SINGLE PANEL FOR DEPTH 5' OR LESS).
D_2 = 5' STD. (ADDITIONAL PANEL FOR DEPTHS >5').
CURTAIN TO REACH BOTTOM UP TO DEPTHS OF 10 FEET. TWO (2) PANELS TO BE USED FOR DEPTHS GREATER THAN]10 FEET UNLESS SPECIAL DEPTH CURTAINS SPECIFICALLY CALLED FOR IN THE PLANS OR AS DETERMINED BY THE ENGINEER. NOTICE: COMPONENTS OF TYPE I MAY BE SIMILAR OR IDENTICAL TO PROPRIETARY DESIGNS. ANY INFRINGEMENT ON THE PROPRIETARY RIGHTS OF THE DESIGNER SHALL BE THE SOLE RESPONSIBILITY OF THE USER. SUBSTITUTIONS FOR TYPE I SHALL BE AS APPROVED BY THE ENGINEER.

NOTES:
1. TURBIDITY BARRIERS ARE TO BE USED IN ALL PERMANENT BODIES OF WATER REGARDLESS OF WATER DEPTH.
2. NUMBER AND SPACING OF ANCHORS DEPENDENT ON WATER VELOCITIES.
3. DEPLOYMENT OF BARRIER AROUND PILE LOCATIONS MAY VARY TO ACCOMMODATE CONSTRUCTION OPERATIONS.
4. NAVIGATION MAY REQUIRE SEGMENTING BARRIER DURING CONSTRUCTION OPERATIONS.

NOTE:
TURBIDITY BARRIERS FOR FLOWING STREAMS AND TIDAL CREEKS MAY BE EITHER FLOATING, OR STAKED TYPES OR ANY COMBINATION OF TYPES THAT WILL SUIT SITE CONDITIONS AND MEET EROSION CONTROL AND WATER QUALITY REQUIREMENTS. THE BARRIER TYPE(S) WILL BE AT THE CONTRACTORS OPTION UNLESS OTHERWISE SPECIFIED IN THE PLANS, HOWEVER PAYMENT WILL BE UNDER THE PAY ITEM(S) ESTABLISHED IN THE PLANS FOR FLOATING TURBIDITY BARRIER AND/OR STAKED TURBIDITY BARRIER. POSTS IN STAKED TURBIDITY BARRIERS TO BE INSTALLED IN VERTICAL POSITION UNLESS OTHERWISE DIRECTED BY THE ENGINEER.

TURBIDITY BARRIER APPLICATIONS

TURBIDITY BARRIERS

N.T.S.

FIGURE 4

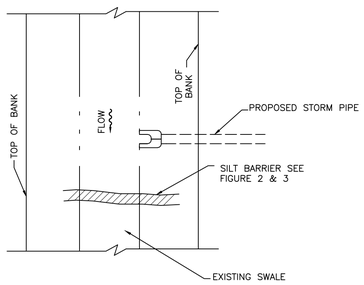

SILT BARRIER AT CONNECTION OF STORM PIPE TO EXISTING SWALE

N.T.S.

FIGURE 5

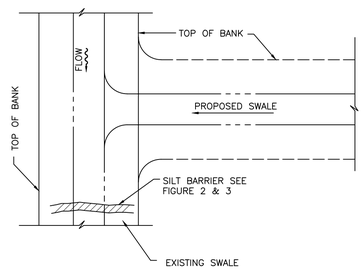

SILT BARRIER AT CONNECTION OF SWALE TO EXISTING SWALE

N.T.S.

FIGURE 6

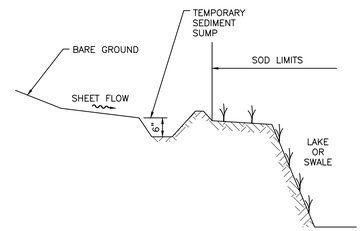

TEMPORARY SEDIMENT SUMP

N.T.S.

FIGURE 7

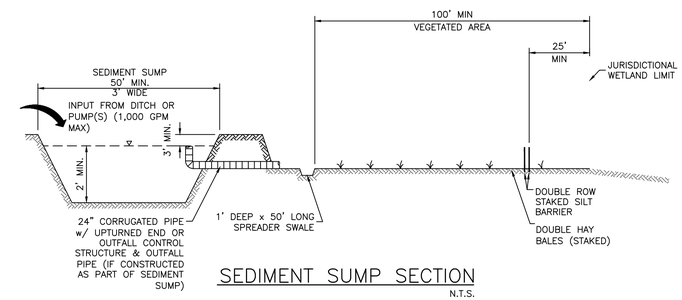

SEDIMENT SUMP SECTION

N.T.S.

FIGURE 8

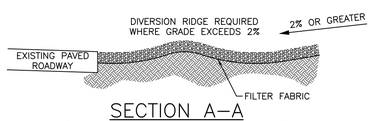

SECTION A–A

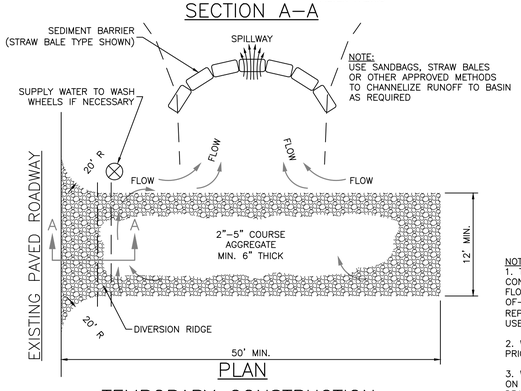

NOTE:
USE SANDBAGS, STRAW BALES OR OTHER APPROVED METHODS TO CHANNELIZE RUNOFF TO BASIN AS REQUIRED

PLAN

TEMPORARY CONSTRUCTION ENTRANCE DETAIL

N.T.S.

NOTE:
1. THE ENTRANCE SHALL BE MAINTAINED IN A CONDITION THAT WILL PREVENT TRACKING OR FLOWING OF SEDIMENT ONTO PUBLIC RIGHT–OF–WAY. THIS MAY REQUIRE TOP DRESSING, REPAIR AND/OR CLEANOUT OF ANY MEASURES USED TO TRAP SEDIMENT.

2. WHEN NECESSARY, WHEELS SHALL BE CLEANED PRIOR TO ENTRANCE ONTO PUBLIC RIGHT–OF–WAY.

3. WHEN WASHING IS REQUIRED, IT SHALL BE DONE ON AN AREA STABILIZED WITH CRUSHED STONE THAT DRAINS INTO AN APPROVED SEDIMENT TRAP OR SEDIMENT BASIN.

NOTES:
1. THE CONTRACTOR SHALL ABIDE ALL APPLICABLE CONDITIONS OF THE REGULATORY AGENCY PERMITS AND HAVE COPIES OF THE PERMITS ON SITE. IF IT IS NECESSARY FOR GROUNDWATER DEWATERING TO DISCHARGE OFFSITE, THEN THE CONTRACTOR SHALL OBTAIN ALL APPLICABLE PERMITTING FROM THE FLORIDA DEPARTMENT OF ENVIRONMENTAL PROTECTION (FDEP). THE CONTRACTOR SHALL BEAR ALL RESPONSIBILITY AND COSTS FOR OBTAINING AND/OR MODIFYING ALL APPLICABLE PERMITTING FOR THE DISCHARGE OF GROUNDWATER DEWATERING AND FOR COMPLYING WITH ALL SWFWMD AND FDEP PERMITTING CONDITIONS.
2. THE CONTRACTOR SHALL STAGE CONSTRUCTION IN PHASES WHENEVER POSSIBLE TO MINIMIZE SOIL LOSS AND CONTROL EROSION.
3. THE CONTRACTOR SHALL PROVIDE A STABILIZED CONSTRUCTION ENTRANCE TO HELP REDUCE VEHICLE TRACKING OF SEDIMENTS. THE PAVED STREET ADJACENT TO THE SITE ENTRANCE WILL BE SWEPT AS REQUIRED TO REMOVE ANY EXCESS MUD, DIRT OR ROCK TRACKED FROM THE SITE. DUMP TRUCKS HAULING MATERIAL FROM THE CONSTRUCTION SHALL BE COVERED WITH A TARPAULIN.
4. ALL EXCAVATION, AND ACCESS TO AND FROM CONSTRUCTION AREAS SHALL BE WITHIN THE LIMITS OF THE PROJECT AREA.
5. THE CONTRACTOR SHALL CONTROL ALL FUGITIVE DUST ORIGINATING ON THIS PROJECT AND SHALL USE WATER, STRAW MULCH, OR OTHER SUITABLE MATERIAL AS REQUIRED.
6. AT A MINIMUM, SILT FENCES, OR APPROVED EQUIVALENT SEDIMENT CONTROLS ARE REQUIRED FOR ALL SIDE SLOPE AND DOWN SLOPE BOUNDARIES OF THE CONSTRUCTION AREA.
7. ALL CONSTRUCTION DEWATERING (IF NECESSARY) SHALL BE CONTAINED ONSITE AND ALLOWED TO INFILTRATE THE SOIL UNLESS FDEP PERMITTING IS OBTAINED FOR OFFSITE DISCHARGE. ALL DEWATERING GROUNDWATER DISCHARGE SHALL BE ROUTED THROUGH A TEMPORARY SEDIMENT SUMP PRIOR TO DISCHARGE TO WETLANDS, OTHER SURFACE WATER, OR OFFSITE. THE GENERAL PROCESS OF THE DEWATERING SYSTEM, AS DEPICTED HEREIN, SHALL BE ADHERED TO DURING CONSTRUCTION. IT SHALL BE THE RESPONSIBILITY OF THE CONTRACTOR TO OBTAIN ALL APPLICABLE APPROVALS FOR ANY MODIFICATIONS HE PROPOSES.
8. THE DEWATERING SYSTEM SHALL USE A PUMP AND PIPING THAT IS LESS THAN 6 INCHES IN DIAMETER AND OPERATE LESS THAN A TOTAL OF SIX MONTHS. ANY DEVIATION FROM THIS REQUIREMENT SHALL REQUIRE A WATER USE PERMIT. THE COST OF A WATER USE PERMIT AND ASSOCIATED MATERIALS SHALL BE BORNE BY THE CONTRACTOR.
9. THE CONTRACTOR SHALL ERECT SILT FENCE, OR APPROVED EQUIVALENT SEDIMENT CONTROLS, AS PER PLAN PRIOR TO COMMENCEMENT OF EXCAVATION/GRADING ACTIVITY.
10. REQUIRED EROSION AND SEDIMENT CONTROL MEASURES MUST BE INSTALLED AND MAINTAINED AS REQUIRED THROUGHOUT THE DURATION OF THE CONSTRUCTION PROJECT.
11. EROSION AND SEDIMENT CONTROL DEVICES (SILT FENCE, OR APPROVED EQUIVALENT SEDIMENT CONTROLS ARE DEPICTED IN APPROXIMATE LOCATIONS AND SHALL BE ADJUSTED AS NECESSARY WITH THE DIRECTION OF THE PROJECT ENGINEER.
12. THE CONTRACTOR SHALL BE RESPONSIBLE FOR REMOVAL AND PROPER DISPOSAL OF ALL EROSION AND SEDIMENT CONTROL DEVICES AT THE COMPLETION OF THE PROJECT.
13. ALL PRACTICABLE AND NECESSARY EFFORTS SHALL BE TAKEN DURING CONSTRUCTION TO CONTROL AND PREVENT EROSION AND TRANSPORT OF SEDIMENT MATERIAL TO INLETS, WETLANDS, AND OFFSITE AREAS. THE CONTRACTOR SHALL BE RESPONSIBLE FOR ALL RESTORATION EFFORTS THAT MAY BE REQUIRED.
14. ALL EROSION AND SEDIMENT CONTROL PROTECTION SHALL BE MAINTAINED BY THE CONTRACTOR IN COMPLIANCE WITH SWFWMD, MANATEE COUNTY, AND NPDES PERMIT REQUIREMENTS THOUGHT THE DURATION OF THE PROJECT. THE CONTRACTOR SHALL INSPECT THE EROSION AND SEDIMENT CONTROL DEVICES WEEKLY AND WITHIN 4 HOURS AFTER EACH RAINFALL EVENT OF 0.5 INCHES OR MORE. ALL MAINTENANCE SHALL BE PERFORMED WITHIN 24 HOURS OF INSPECTION.

REV NO.	REVISION	DATE	DRAWN BY / EMP. NO.	CHECKED BY / EMP. NO.

ACTIVITY	INITIALS/EMP. NO.	DATE
DESIGNED BY:		
DRAWN BY:		
CHECKED BY:		
CONTRACT ADMIN. BY:		
WM APPROVED BY:		

Stantec
6900 Professional Parkway East, Sarasota, FL34240-8414
Phone 941-907-6900 • Fax 941-907-6910
Certificate of Authorization #27013 • www.stantec.com

CLIENT: MANATEE BOARD OF COUNTY COMMISSIONERS

PROJECT: WASHINGTON PARK PRESERVE PHASE I

DATE: JULY 2019
HORIZONTAL SCALE:
VERTICAL SCALE:
SEC: 12 TWP: 34S RGE: 17E

TITLE: BEST MANAGEMENT PRACTICES DETAILS

CROSS REFERENCE FILE NO.:
PROJECT NUMBER: 177310895

R. QUINCE SELLERS, P.E.
FLORIDA LICENSE NO. 49374
INDEX NUMBER:
SHEET NUMBER: 28 OF 28