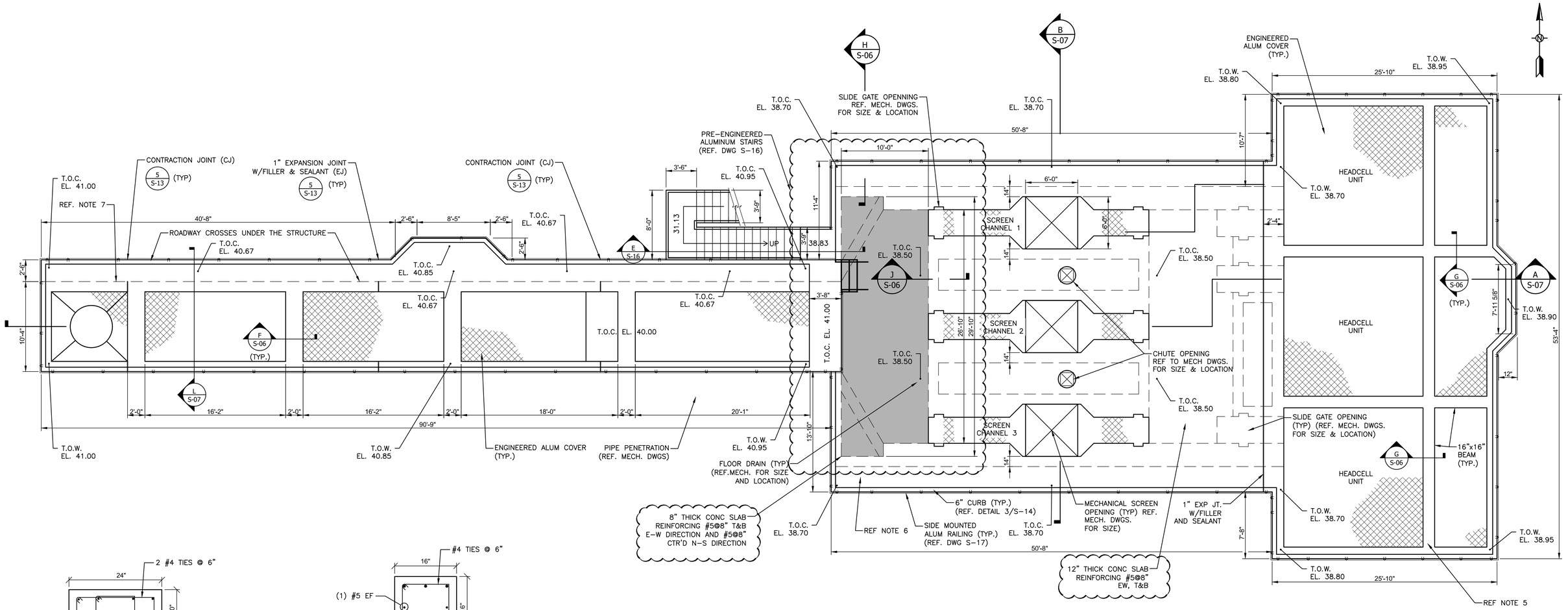

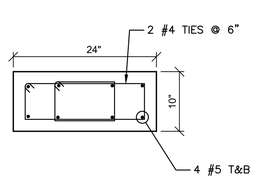

F S-06 BEAM SECTION
SCALE: 1" = 1'

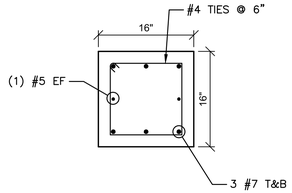

G S-06 BEAM SECTION
SCALE: 1" = 1'

UPPER LEVEL @ EL. 40.67 AND 38.50
SCALE: 3/16" = 1'

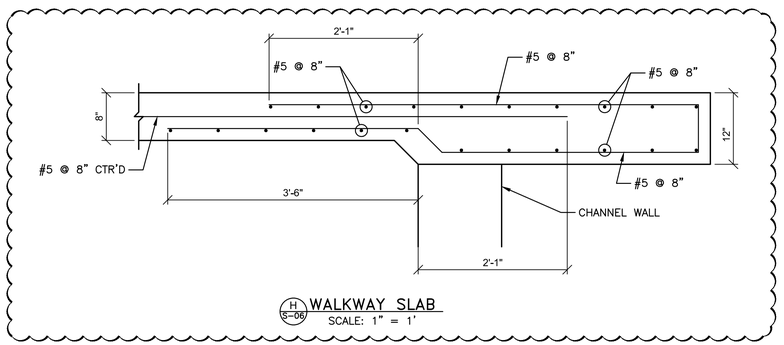

H S-06 WALKWAY SLAB
SCALE: 1" = 1'

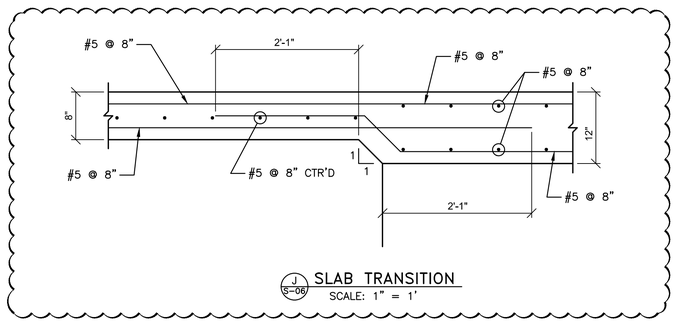

J S-06 SLAB TRANSITION
SCALE: 1" = 1'

NOTES:

1. REF. MECHANICAL DRAWINGS FOR PIPE PENETRATIONS SIZE AND LOCATIONS.
2. REF. MECHANICAL DRAWINGS FOR ODOR CONTROL DUCT OPENINGS SIZE AND LOCATIONS.
3. ALL CONCRETE OPENINGS SHALL BE REINFORCED PER DETAIL 1 SHEET S-15.
4. SLIDE GATE BLOCK OUT SIZE AND LOCATION SHALL BE AS SHOWN ON MECH. DRAWINGS. CONTRACTOR SHALL VERIFY BASED ON SLIDE GATE MANUFACTURER REQUIREMENT'S.
5. SLOPE TOP OF EFFLUENT CHANNEL WALLS AND HEADCELL WALLS TO PROVIDE DRAINAGE SLOPE (REF. MECHANICAL DWGS FOR DRAIN LOCATIONS).
6. SLOPE TOP OF HEADWORKS TO PROVIDE 1% DRAINAGE SLOPE (REF MECHANICAL DWGS FOR DRAINAGE LOCATIONS).
7. SLOPE TOP OF FLUME CHANNEL WALKWAY TO PROVIDE 1% DRAINAGE SLOPE TO DRAIN. (REF MECHANICAL DWGS FOR DRAINAGE LOCATIONS).
8. CONTRACTOR SHALL SUBMIT ENGINEERED ALUMINUM COVER SHOP DRAWING FOR REVIEW PRIOR TO FABRICATION. SHOP DRAWINGS SHALL INCLUDE PLATE COVERS, EDGE CONNECTIONS, SEALS AND RECOMMENDED ANCHOR BOLT SIZE AND SPACING THAT ARE ANCHORED TO WALLS AND SLABS. COVER DESIGN LIVE LOAD 50 PSF.
9. CONCRETE STRENGTH f'c=4500 PSI W/TYPE II, ASTM C150 CEMENT AND MAXIMUM 20% BY WEIGHT SLAG AND/OR FLY ASH CONTENT.

REV.NO.	DESCRIPTIONS	DATE
	REVISIONS	

SEAL

H.A. HOBI, PE
No. 59360

SEAL

McKIM&CREED
1365 Hamlet Avenue
Clearwater, Florida 33756
Phone: (727)442-7196, Fax: (727)461-3827
CA Lic. No. 29588
www.mckimcreed.com

Manatee County FLORIDA

SWWRF NEW HEADWORKS

HEADWORKS PLAN AT TOP

DATE:	MAY, 2019
MCE PROJ. #	1024-0170
DRAWN	CW
DESIGNED	SH
CHECKED	EA
PROJ. MGR.	DCW

SCALE
HORIZONTAL: AS SHOWN
VERTICAL: NA

DRAWING NUMBER
S-06

STATUS: ISSUED FOR BID
REVISION

\\mckimcreed.com\vdata\Vfile_Server_Data\DATA\Projects\1024\170\80-Drawings\Structural\S-06 1024170.dwg, 7/10/2019 10:36:25 AM, Carlos Najarro

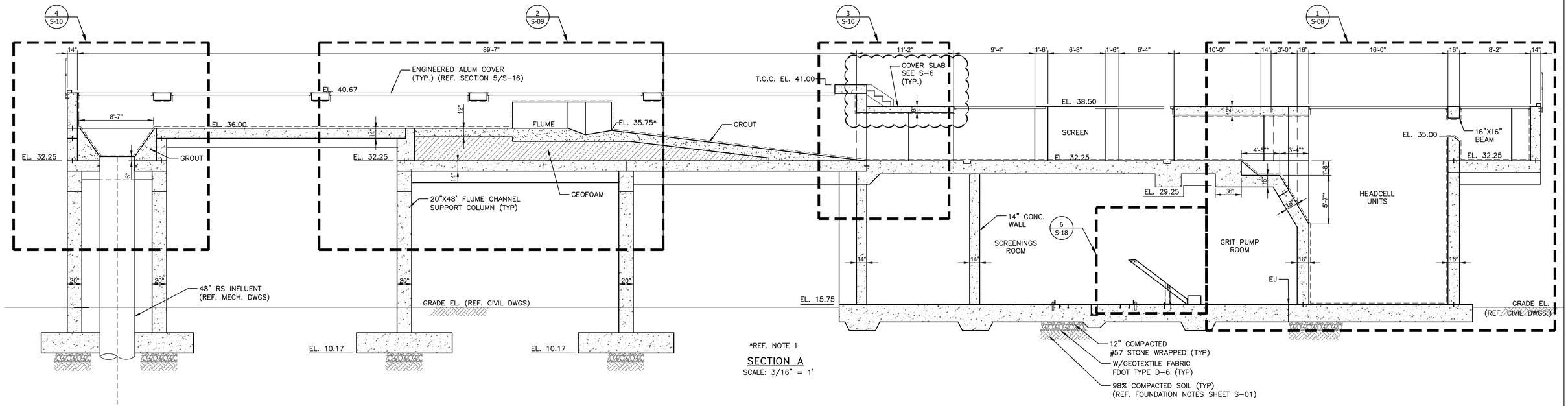

*REF. NOTE 1

SECTION A
SCALE: 3/16" = 1'

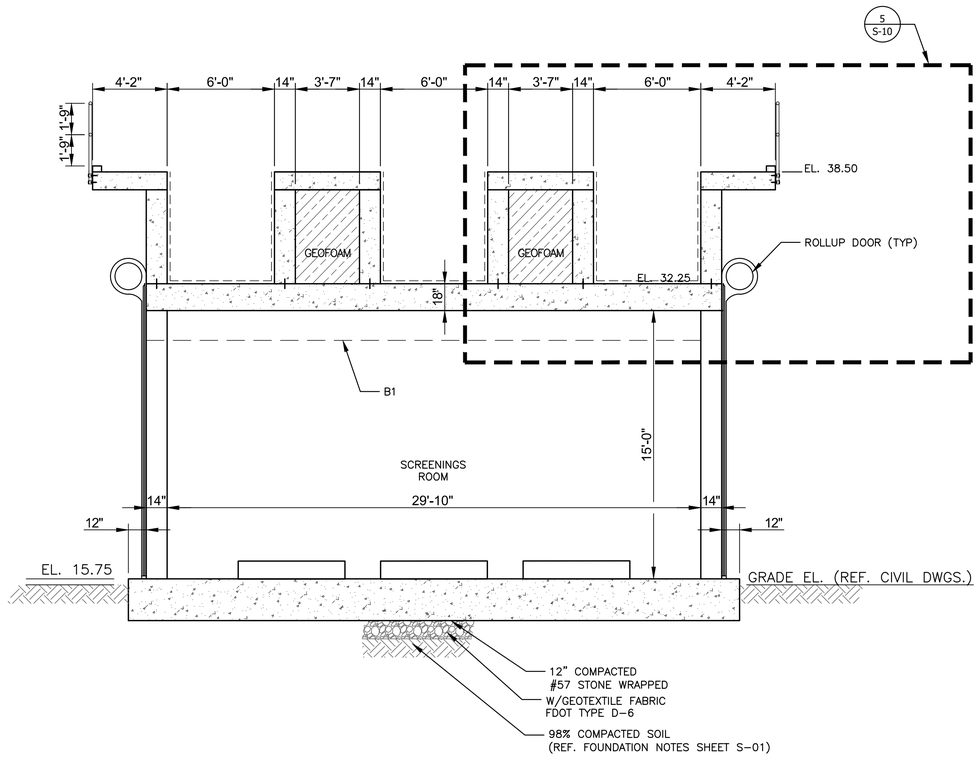

SECTION B
SCALE: 1/4" = 1'

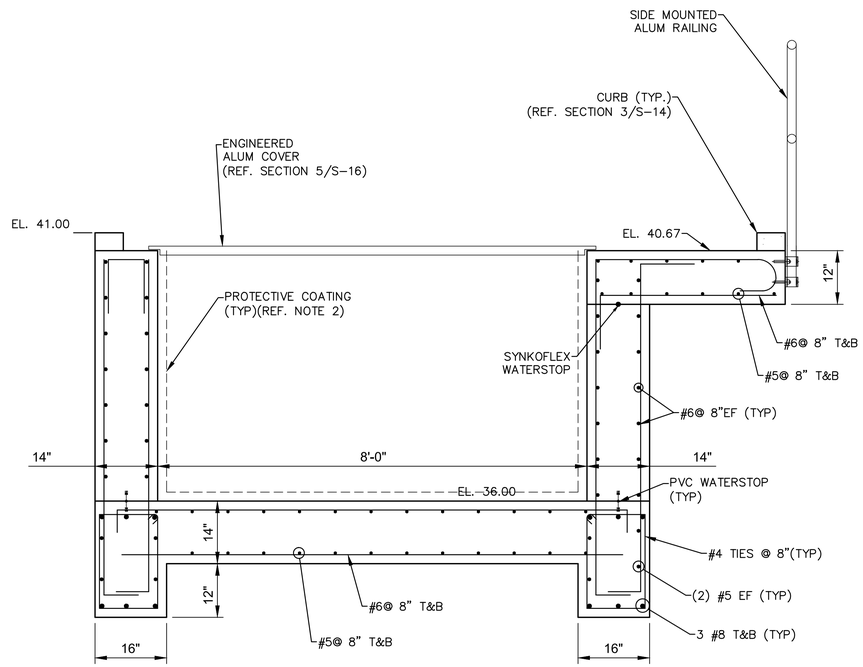

SECTION L
SCALE: 3/4" = 1'

NOTES:

1. CONTRACTOR SHALL COORDINATE ALL DIMENSION AND ELEVATIONS WITH SELECTED EQUIPMENT DIMENSIONS.
2. PROTECTIVE COATING SHALL BE APPLIED TO ALL CONCRETE SURFACES EXPOSED TO WASTEWATER. (REF. SPECS. SECT. 09970)
3. CONCRETE STRENGTH f'c=4500 PSI W/TYPE II, ASTM C150 CEMENT AND MAXIMUM 20% BY WEIGHT SLAG AND/OR FLY ASH CONTENT.

REV.NO.	DESCRIPTIONS	DATE
	REVISIONS	

SEAL

H.A. HOBI, PE
No. 59360

SEAL

McKIM&CREED
1365 Hamlet Avenue
Clearwater, Florida 33756
Phone: (727)442-7196, Fax: (727)461-3827
CA Lic. No. 29588
www.mckimcreed.com

Manatee County FLORIDA

SWWRF NEW HEADWORKS

STRUCTURE SECTIONS

DATE:	MAY, 2019
MCE PROJ. #	1024-0170
DRAWN	CW
DESIGNED	SH
CHECKED	EA
PROJ. MGR.	DCW

SCALE
HORIZONTAL: AS SHOWN
VERTICAL: NA

DRAWING NUMBER
S-07

STATUS: ISSUED FOR BID
REVISION

\\mckimcreed.com\nasuni\Data\File_Server_Data\DAY1\Projects\1024\0170\80-Drawings\Structural\S-07-08 10240170.dwg, 7/10/2019 10:36:13 AM, Carlos Najarro

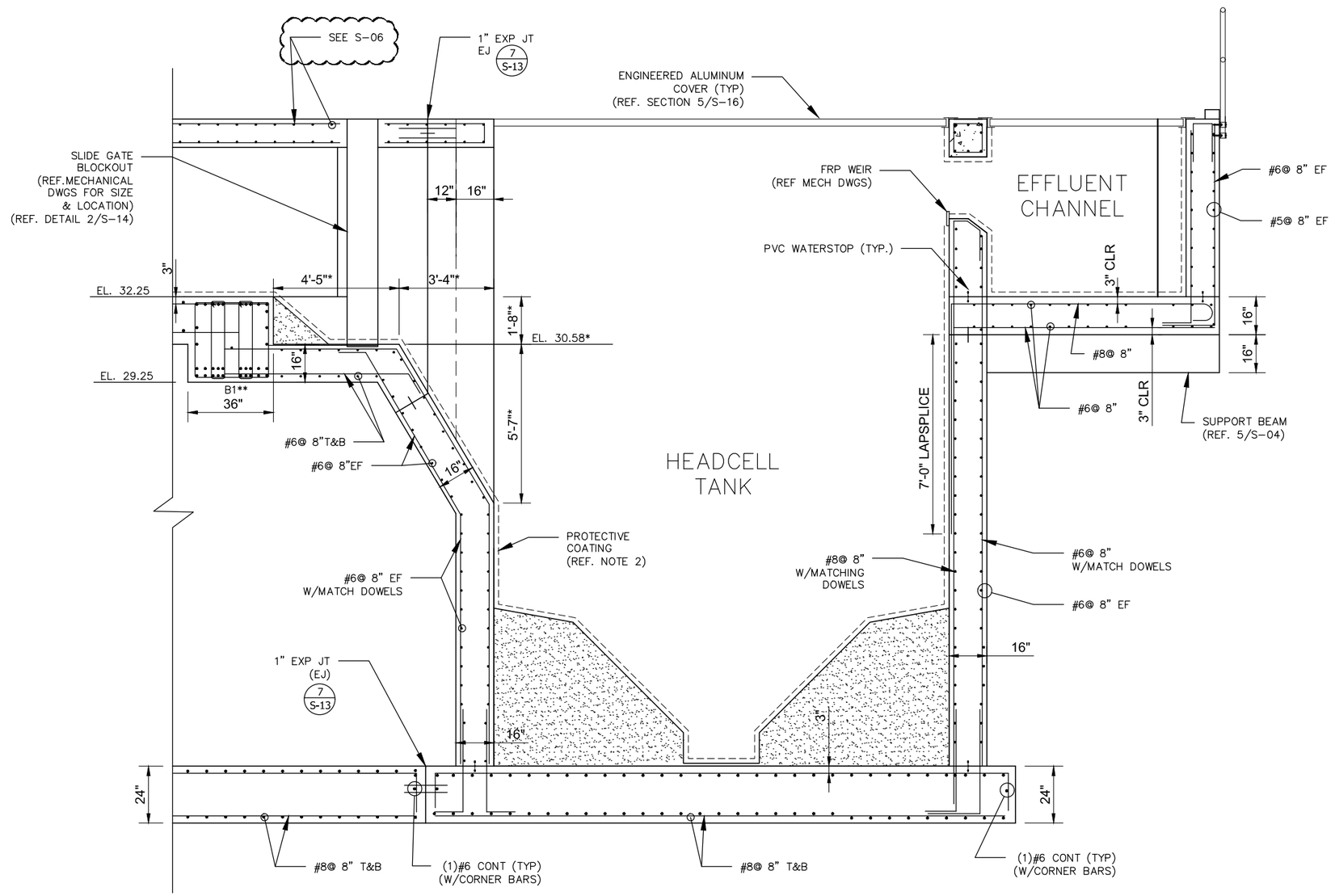

* REF. NOTE 1
** REF. SECTION 1/S-04

DETAIL 1

SCALE: 1/2" = 1'-0"

NOTES:

1. CONTRACTOR SHALL COORDINATE ALL DIMENSION AND ELEVATIONS WITH SELECTED EQUIPMENT DIMENSIONS.
2. PROTECTIVE COATING SHALL BE APPLIED TO ALL CONCRETE SURFACES EXPOSED TO WASTEWATER. (REF. SPECS. SECT. 09970)
3. CONCRETE STRENGTH f'c=4500 PSI W/TYPE II, ASTM C150 CEMENT AND MAXIMUM 20% BY WEIGHT SLAG AND/OR FLY ASH CONTENT.

REV.NO.	DESCRIPTIONS	DATE
	REVISIONS	

SEAL

H.A. HOBI, PE
No. 59360

SEAL

McKIM&CREED
1365 Hamlet Avenue
Clearwater, Florida 33756
Phone: (727)442-7196, Fax: (727)461-3827
CA Lic. No. 29588
www.mckimcreed.com

Manatee County FLORIDA

SWWRF NEW HEADWORKS

STRUCTURE SECTIONS

DATE:	MAY, 2019
MCE PROJ. #	1024-0170
DRAWN	CW
DESIGNED	SH
CHECKED	EA
PROJ. MGR.	DCW

SCALE
HORIZONTAL: AS SHOWN
VERTICAL: NA

DRAWING NUMBER
S-08

STATUS: ISSUED FOR BID
REVISION

\\mckimcreed.com\nasuni\Data\File_Server_Data\DAYY\Projects\1024\0170\80-Drawings\Structural\S-07-08 1024017O.dwg, 7/10/2019 10:36:46 AM, Carlos Najarro

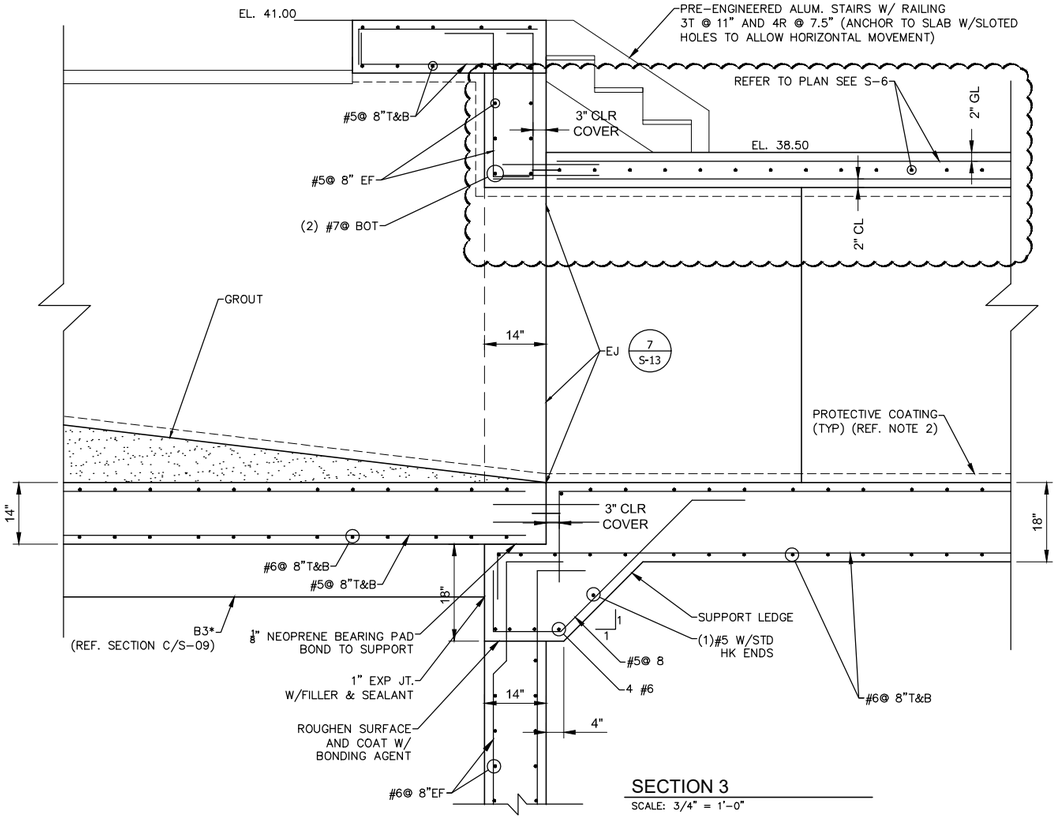

SECTION 3

SCALE: 3/4" = 1'-0"

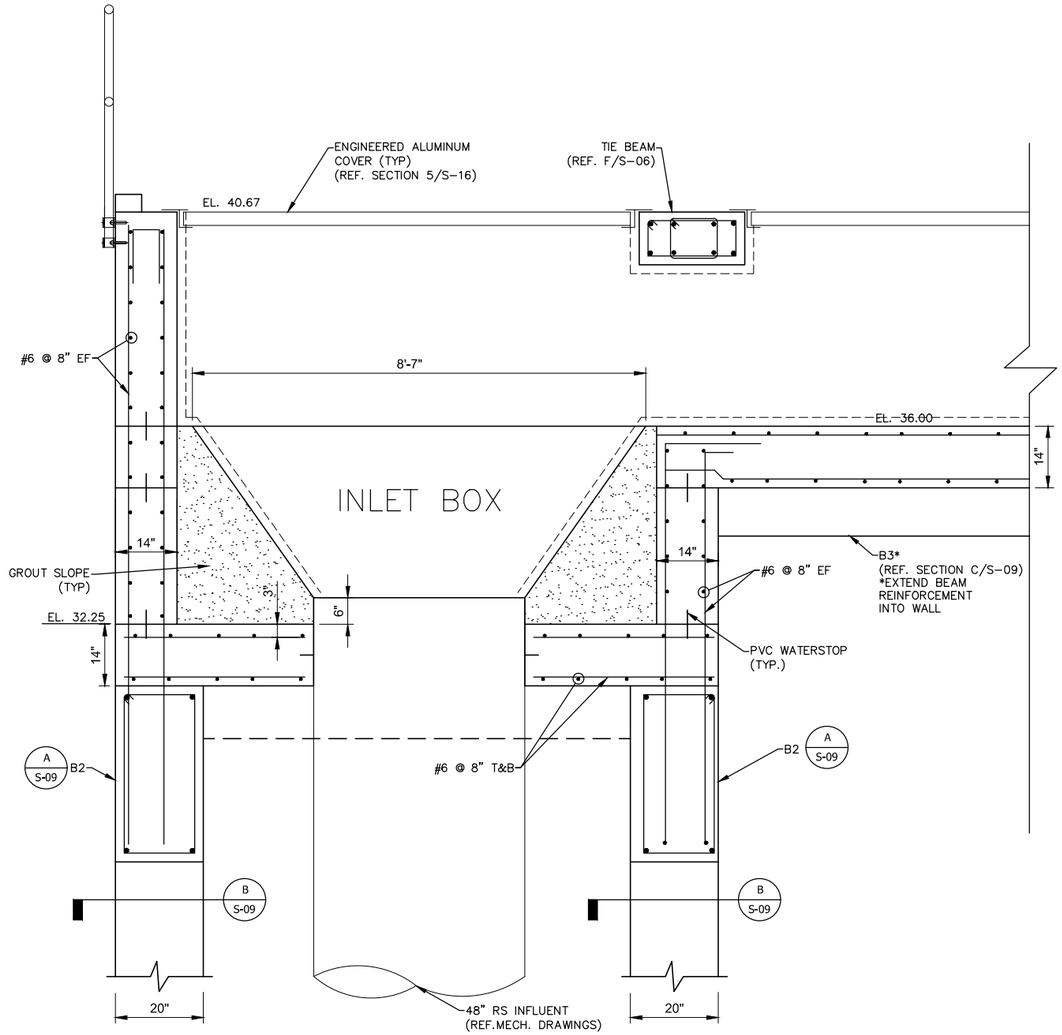

SECTION 4

SCALE: 3/4" = 1'-0"

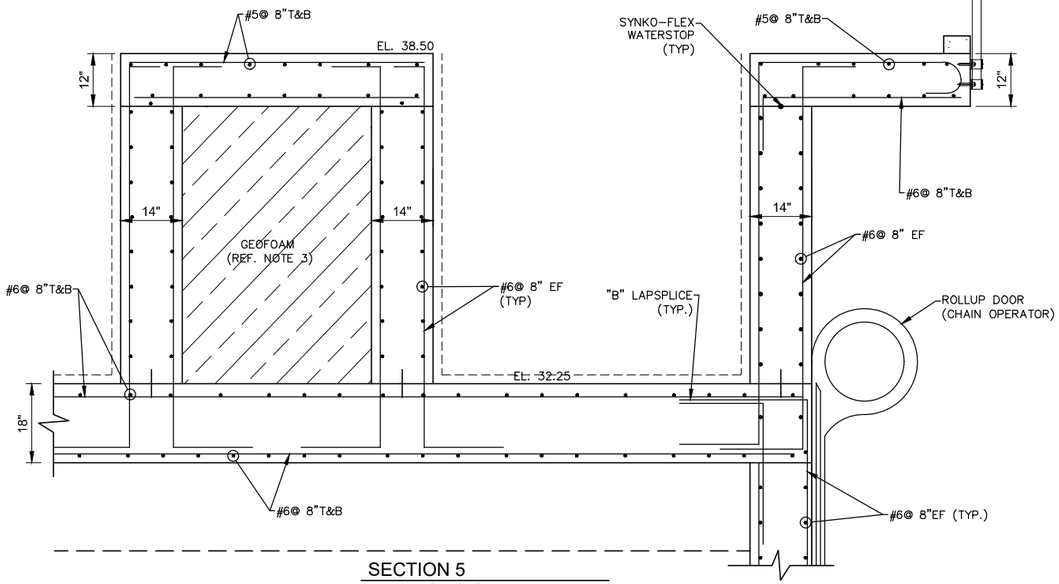

SECTION 5

SCALE: 3/4" = 1'-0"

NOTES:

1. CONTRACTOR SHALL COORDINATE ALL DIMENSION AND ELEVATIONS WITH SELECTED EQUIPMENT DIMENSIONS.
2. PROTECTIVE COATING SHALL BE APPLIED TO ALL CONCRETE SURFACES EXPOSED TO WASTEWATER. (REF. SPECS. SECT. 09970)
3. GEOFOAM SHALL BE ASTM D6817 TYPE EP15, CUT FOAM BLOCK TO COMPLETELY FILL DESIGNATED SPACES. BOND GEOFOAM BLOCKS TO CONCRETE FLOOR AND TO EACH OTHER.
4. CONCRETE STRENGTH f'c=4500 PSI W/TYPE II, ASTM C150 CEMENT AND MAXIMUM 20% BY WEIGHT SLAG AND/OR FLY ASH CONTENT.

REV.NO.	DESCRIPTIONS	DATE
	REVISIONS	

SEAL

H.A. HOBI, PE
No. 59360

SEAL

McKIM&CREED
1365 Hamlet Avenue
Clearwater, Florida 33756
Phone: (727)442-7196, Fax: (727)461-3827
CA Lic. No. 29588
www.mckimcreed.com

Manatee County FLORIDA

SWWRF NEW HEADWORKS

STRUCTURE SECTIONS

DATE:	MAY, 2019
MCE PROJ. #	1024-0170
DRAWN	CW
DESIGNED	SH
CHECKED	EA
PROJ. MGR.	DCW

SCALE
HORIZONTAL: AS SHOWN
VERTICAL: NA

DRAWING NUMBER
S-10

STATUS: ISSUED FOR BID

REVISION

\\mckimcreed.com\vosun\Data\File_Server_Data\DATA\1\Projects\1024\0170\06-Drawings\Structural\S-07-08 1024070.dwg, 7/10/2019 10:37:59 AM, Carlos Najarro