CONSTRUCTION PLANS

FOR

BAYSHORE YACHT BASIN FORCE MAIN AND LIFT STATION REPLACEMENT

MANATEE COUNTY, FLORIDA

FEBRUARY 2022

MANATEE COUNTY PROJECT #6097484

PROJECT TEAM:

OWNER:
MANATEE COUNTY
1022 26TH AVE. E.
BRADENTON, FL 34208
CONTACT: BRETT GOCKA, P.E.
941–708–7450 EXT. 7232

ENGINEER:
KIMLEY–HORN AND ASSOCIATES, INC.
100 2ND AVENUE SOUTH, SUITE 105N
ST. PETERSBURG, FL 33701
CONTACT: MICHAEL A. SEMAGO, P.E.
727–498–3633

ELECTRICAL:
TRICON ENGINEERING
777 S. HARBOR ISLAND BLVD. SUITE 870
TAMPA, FL 33602
CONTACT: TIMOTHY THOMAS, P.E.
813–227–9190

SURVEYOR:
HYATT SURVEY SERVICES, INC.
11007 8TH AVENUE EAST,
BRADENTON, FL 34212
CONTACT: RUSSELL P. HYATT, PSM
941–748–4693

GEOTECHNICAL ENGINEER
ARDAMAN & ASSOCIATES, INC.
1724 BARBER ROAD,
SARASOTA, FL, 34240
CONTACT: JERRY H. KUEHN, P.E.
941–922–3526

UTILITY CONTACTS:

MANATEE COUNTY UTILITY OPERATIONS
AND TRANSPORTATION DEPARTMENT
KATHY MCMAHON
4422–C 66TH STREET W
BRADENTON, FL 34210
941–792–8811 EXT. 5002

TECO
JOAN DOMNING
8416 PALM RIVER RD
TAMPA, FL 33619
813–275–3783

FRONTIER COMMUNICATIONS
TONI CANNON
3712 W WALNUT ST.
TAMPA, FL 33607
813–875–1014

CHARTER COMMUNICATIONS
JAMES FLEMING
5413 SR 64 E
BRADENTON, FL 34208
727–329–2951

FLORIDA POWER AND LIGHT
JOEL BRAY
386–586–6403

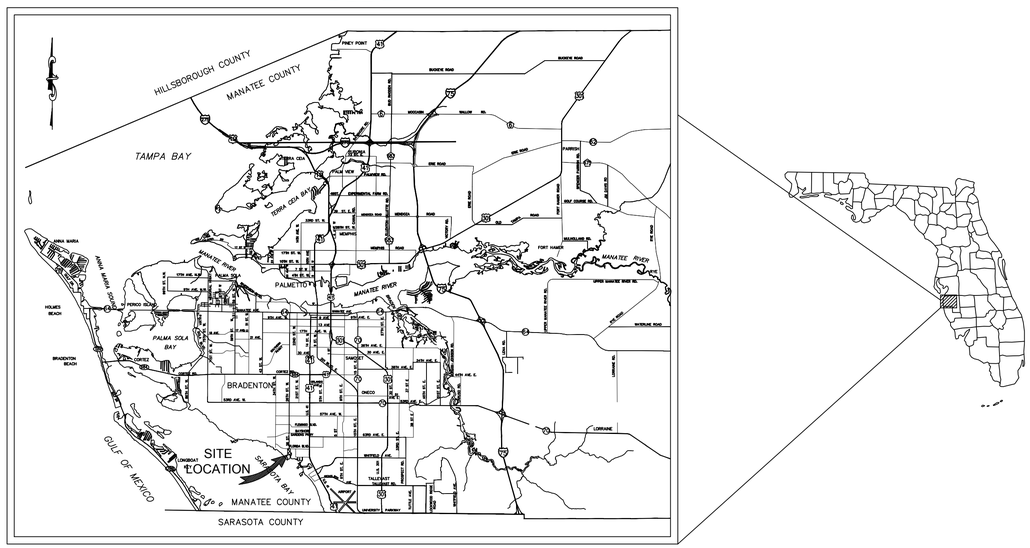

PROJECT VICINITY MAP
N.T.S.

BID PLANS

THE SITE CONSTRUCTION STAKEOUT SHALL BE PERFORMED UNDER THE DIRECTION OF A FLORIDA REGISTERED SURVEYOR. AUTOCAD FILES WILL BE FURNISHED TO AID IN THE SITE CONSTRUCTION STAKEOUT. ANY DISCREPANCIES FOUND BETWEEN AUTOCAD FILES AND SITE CONSTRUCTION PLANS SHALL BE BROUGHT TO THE ENGINEER'S ATTENTION FOR CLARIFICATION PRIOR TO THAT STAKEOUT.

PREPARED BY
Kimley»Horn

© 2022 KIMLEY-HORN AND ASSOCIATES, INC.

100 2ND AVENUE SOUTH, SUITE 105-N
ST. PETERSBURG, FL 33701
PHONE (727) 547-3999
WWW.KIMLEY-HORN.COM Registry No. 35106

No.	REVISIONS	DATE	BY

THIS DOCUMENT IS PROTECTED BY SECTION 106 OF THE "UNITED STATES COPYRIGHT ACT". REPRODUCTION OR ALTERATION OF THIS DOCUMENT OR THE INFORMATION CONTAINED HEREON BY ANY MEANS WHATSOEVER IS STRICTLY PROHIBITED WITHOUT THE PRIOR WRITTEN CONSENT OF KIMLEY–HORN AND ASSOCIATES, INC. CONSENT IS HEREBY GRANTED SPECIFICALLY TO GOVERNMENTAL AGENCIES TO REPRODUCE THIS DOCUMENT IN COMPLIANCE WITH F.S. CHAPTER 119.

MICHAEL A. SEMAGO, P.E.
FLORIDA LICENSE NUMBER:
87501
DATE:

DATE
FEB 2022

PROJECT NO.
148400067

SHEET NUMBER
G-1

SHEET LIST TABLE	
SHEET NUMBER	SHEET TITLE
G–1	COVER SHEET
G–2	DRAWING INDEX & GENERAL NOTES
G–3	SURVEY & SUE NOTES
G–4	CONSTRUCTION PHASING PLAN
G–5	KEY SHEET
C–1	LIFT STATION EXISTING SITE PLAN
C–2	LIFT STATION DEMOLITION PLAN
C–3	EXISTING WETWELL DEMOLITION PLAN
C–4	LIFT STATION SITE PLAN
C–5	DIMENSIONAL CONTROL PLAN
C–6	GRADING PLAN
C–7	PLAN AND PROFILE (STA 0+00 – STA 4+50)
C–8	PLAN AND PROFILE (STA 4+50 – STA 7+00)
C–9	PLAN AND PROFILE (STA 7+00 – STA 11+00)
C–10	PLAN AND PROFILE (STA 11+00 – STA 15+31)
C–11	CIVIL DETAILS
C–12	CIVIL DETAILS
C–13	CIVIL DETAILS
C–14	CIVIL DETAILS
M–1	LIFT STATION SITE PLAN
M–2	ISOMETRIC VIEWS
M–3	WET WELL PLAN
M–4	WETWELL CROSS SECTION I
M–5	WETWELL CROSS SECTION II
M–6	WETWELL CRANE
M–7	ELEVATED PLATFORM PLAN
M–8	ELECTRICAL BUILDING WEST ELEVATION
M–9	ELECTRICAL BUILDING NORTH ELEVATION
M–10	PREFABRICATED BUILDING – PLAN
M–11	PREFABRICATED BUILDING – SECTION
M–12	HVAC ABBREVIATIONS AND SCHEDULES
M–13	HVAC FLOOR PLAN
M–14	MECHANICAL DETAILS
M–15	MECHANICAL DETAILS
S–1	STRUCTURAL NOTES/EQUIPMENT LAYOUT
S–2	ELEVATED PLATFORM DETAILS
S–3	ELEVATED PLATFORM DETAILS
S–4	STAIR AND RAILING DETAILS
S–5	WETWELL TOP SLAB PLAN
S–6	WETWELL TOP SLAB SECTION
S–7	WETWELL SECTION
S–8	STRUCTURAL WETWELL DETAILS
S–9	VALVE ASSEMBLY AND ODOR CONTROL SLABS
L–1	LANDSCAPE NOTES AND DETAILS
L–2	LANDSCAPE PLAN
IR–1	IRRIGATION NOTES
IR–2	IRRIGATION PLAN
IR–3	IRRIGATION DETAILS
E–1	ELECTRICAL LEGEND AND ABBREVIATIONS
E–2	ELECTRICAL SITE PLAN
E–3	SITE LIGHTING PLAN
E–4	LIGHTING PROTECTION SYSTEM PLAN
E–5	ELECTRICAL GROUNDING PLAN
E–6	ELECTRICAL BUILDING POWER AND LIGHTING PLANS
E–7	GENERATOR DETAILS
E–8	MOTOR CONTROL CENTER ELEVATION
E–9	MOTOR CONTROL CENTER ONE–LINE DIAGRAM
E–10	TYPICAL VFD WIRING DIAGRAM
E–11	EQUIPMENT RACK ELEVATIONS
E–12	WET WELL JUNCTION BOX RACK ELEVATION
E–13	WET WELL JUNCTION BOX DETAILS
E–14	PANELBOARD SCHEDULE AND ESO DETAIL
E–15	AREA LIGHT DETAILS
E–16	LIGHTNING PROTECTION DETAILS
E–17	LIGHTING PROTECTION DETAILS AND NOTES
E–18	CONDUIT AND CABLE SCHEDULE
E–19	CONDUIT AND CABLE SCHEDULE
I–1	INSTRUMENTATION LEGEND AND ABBREVIATIONS
I–2 – I–14	DATA FLOW SYSTEMS CONTROL PANEL WIRING DIAGRAMS
I–15	DATA FLOW SYSTEMS TCU/VFD PANEL LAYOUT
I–16	INSTRUMENTATION DETAILS

GENERAL

1. ALL CONSTRUCTION ACTIVITIES SHALL BE COORDINATED WITH THE PROJECT MANAGEMENT DIVISION. THE PROJECT MANAGER IS: BRETT GOCKA, P.E. AND CAN BE REACHED AT (941) 708–7450 X 7232.
2. IF THE CONTRACTOR WANTS A SITE VISIT PRIOR TO BIDDING, THESE SHALL BE ARRANGED THROUGH THE COUNTY'S PURCHASING DIVISION.
3. ALL CONSTRUCTION ON THIS PROJECT SHALL BE IN ACCORDANCE WITH THE LATEST EDITION OF MANATEE COUNTY PUBLIC WORKS STANDARDS UTILITIES STANDARDS MANUAL AND HIGHWAY & TRAFFIC STANDARDS MANUAL AND/OR FDOT "STANDARD PLANS FOR ROAD AND BRIDGE CONSTRUCTION" UNLESS OTHERWISE INDICATED ON THE PLANS.
4. THE CONTRACTOR SHALL BE RESPONSIBLE FOR MEETING ALL CONDITIONS AND REQUIREMENTS OF ALL PERMITS AND ALL GOVERNING FEDERAL, STATE, AND LOCAL AGENCIES. THE CONTRACTOR SHALL OBTAIN AND PAY FOR ALL REQUIRED PERMITS THAT ARE NOT PROVIDED IN THE BID DOCUMENTS, AT NO ADDITIONAL COST TO THE OWNER.
5. THE INFORMATION PROVIDED IN THESE PLANS IS SOLELY TO ASSIST THE CONTRACTOR IN ASSESSING THE NATURE AND EXTENT OF THE CONDITIONS WHICH MAY BE ENCOUNTERED DURING THE COURSE OF WORK. ALL CONTRACTORS ARE DIRECTED, PRIOR TO BIDDING, TO CONDUCT WHATEVER INVESTIGATION THEY MAY DEEM NECESSARY TO ARRIVE AT THEIR OWN CONCLUSIONS REGARDING THE ACTUAL CONDITIONS THAT WILL BE ENCOUNTERED, AND UPON WHICH THEIR BIDS WILL BE BASED.
6. THE CONTRACTOR SHALL REVIEW AND VERIFY ALL DIMENSIONS ON THE PLANS AND REVIEW ALL FIELD CONDITIONS THAT MAY AFFECT CONSTRUCTION. SHOULD DISCREPANCIES OCCUR, THE CONTRACTOR SHALL NOTIFY THE ENGINEER TO OBTAIN THE ENGINEER'S CLARIFICATION BEFORE COMMENCING WITH CONSTRUCTION.
7. THE CONTRACTOR SHALL NOTIFY SUNSHINE 811 (1–800–432–4770) AT LEAST 2 FULL BUSINESS DAYS PRIOR TO CONSTRUCTION OPERATIONS. THE CONTRACTOR SHALL BE RESPONSIBLE FOR COORDINATING WITH ALL UTILITIES FOR THE POSSIBLE RELOCATION OR THE TEMPORARY MOVEMENT OF ANY EXISTING UTILITIES WITHIN THE RIGHTS–OF–WAY OR UTILITY EASEMENTS. IT IS THE CONTRACTOR'S RESPONSIBILITY TO PROTECT EXISTING UTILITIES FROM DAMAGE. EXPLORATORY EXCAVATION MAY BE REQUIRED PRIOR TO CONNECTION TO EXISTING UTILITIES.
8. NO WORK, EXCEPT FOR EMERGENCY TYPE, SHALL BE PERFORMED AFTER 7:00 PM AND BEFORE 7:00 AM. FOR ADDITIONAL PROJECT RESTRAINTS, REFER TO SECTION 01310 OF THE SPECIFICATIONS.
9. THE CONTRACTOR SHALL PROVIDE CERTIFIED RECORD DRAWINGS AS OUTLINED IN THE SPECIFICATIONS. RED–LINE DRAWINGS SHALL BE CURRENT WITH EACH PAY APPLICATION SUBMITTED AND WILL BE CHECKED AS PART OF THE PAY APPLICATION REVIEW PROCESS. PAYMENT WILL NOT BE MADE TO CONTRACTOR WITHOUT APPROVED RED–LINE DRAWINGS. THE MOST CURRENT SET OF RED–LINE DRAWINGS SHALL ALSO BE BROUGHT TO EACH MONTHLY PROGRESS MEETING.
10. THE CONTRACTOR SHALL INCLUDE IN HIS BID: DEWATERING PUMPING EQUIPMENT, PUMPS, FITTINGS, LABOR, ETC. AS NECESSARY, BASED ON METHOD AND SEQUENCE OF CONSTRUCTION TO COMPLETE ALL WORK WHILE MAINTAINING UTILITY SERVICE OPERATIONS AT ALL TIMES.
11. ALL PROPOSED WORK SHALL BE COORDINATED WITH MANATEE COUNTY UTILITIES DEPARTMENT AT LEAST TWO WEEKS IN ADVANCE OF PROPOSED CONSTRUCTION.
12. THE CONTRACTOR SHALL FURNISH SHOP DRAWINGS TO THE ENGINEER FOR REVIEW OF ALL PIPE CONNECTIONS, TRANSITIONS, AND SPECIAL APPURTENANCES PRIOR TO FABRICATION OR DELIVERY TO THE JOB SITE.
13. UNLESS OTHERWISE INDICATED OR APPROVED, ALL BELOW GROUND PVC PIPE SHALL HAVE PUSH–ON JOINTS, AND ALL ABOVE GROUND DIP PIPE SHALL HAVE FLANGED JOINTS. JOINTS SHALL BE RESTRAINED PER THE DETAILS IN THESE PLANS.
14. SANITARY SEWERS AND FORCE MAINS CROSSING OVER OR UNDER WATER MAINS SHALL BE LAID TO PROVIDE A MINIMUM VERTICAL DISTANCE OF 18" BETWEEN THE INVERT OF THE UPPER PIPE AND THE CROWN OF THE LOWER PIPE. WHERE THIS MINIMUM SEPARATION CANNOT BE MAINTAINED, THE CROSSING SHALL BE ARRANGED SO THAT THE SEWER OR FORCE MAIN PIPE JOINTS ARE EQUIDISTANT FROM THE POINT OF CROSSING WITH NO LESS THAN 10' BETWEEN ANY TWO JOINTS. AS AN ALTERNATIVE, THE SEWER OR FORCE MAIN MAY BE PLACED IN A WATERTIGHT CASING PIPE, CONSISTENT WITH F.A.C. RULE 62–555.314.
15. ALL BELOW–GRADE FITTINGS 4–INCHES AND GREATER IN DIAMETER SHALL BE MECHANICAL JOINT DUCTILE IRON WITH AN APPROVED LINING FOR THEIR INTERIOR SURFACES AND COAL TAR ENAMEL COATING ON EXTERIOR SURFACES, AS NOTED IN SECTION 02615 OF SPECIFICATIONS.
16. IT SHALL BE THE CONTRACTOR'S RESPONSIBILITY TO SECURE PROPERTY FOR STAGING MATERIALS AND EQUIPMENT.
17. IT WILL BE THE CONTRACTOR'S RESPONSIBILITY TO ACQUIRE, OR ENTER INTO AGREEMENTS, FOR LANDS FOR LAY DOWN AREAS AND STAGING. THE COUNTY WILL COORDINATE AND ADVISE, TO HELP IDENTIFY POSSIBLE PARCELS. IT IS FINALLY THE CONTRACTOR'S RESPONSIBILITY TO SECURE THE NEEDED AREAS, AND THE COUNTY TAKE NO RESPONSIBILITY FOR DELAYS IN THIS REGARD.
18. COORDINATION AND PUBLIC INFORMATION FOR AND WITH AREA RESIDENTS ARE OF THE UTMOST IMPORTANCE. CONTRACTOR WILL INSURE ADHERENCE TO THE COUNTY'S NOISE ORDINANCE, HAZARD AND SAFETY, AND NUISANCE ABATEMENT DIRECTIONS, PLANS, OBJECTIONS AND ORDINANCES. THE ENGINEER WILL HAVE THE FINAL DISCRETION IN THIS REGARD, AS REPRESENTED ONSITE BY THE COUNTY INSPECTOR AND ENGINEER'S STAFF.

SAFETY

19. THE CONTRACTOR SHALL BE RESPONSIBLE FOR COMPLIANCE WITH THE FLORIDA TRENCH SAFETY ACT, 90–96, LAWS OF FLORIDA EFFECTIVE OCTOBER 1, 1990 AND THE OCCUPATIONAL SAFETY AND HEALTH ADMINISTRATION EXCAVATION SAFETY STANDARDS, 29 CFR 1926.650, SUBPART P, AS AMENDED. THE CONTRACTOR SHALL INCLUDE IN THE TOTAL BID PRICE ALL COSTS FOR COMPLIANCE WITH THESE REGULATIONS.
20. THE CONTRACTOR SHALL USE SHEET PILING, SHEETING, BRACING, ETC., AS REQUIRED IN ALL EXCAVATION AREAS AND CONFORM TO ALL OSHA REQUIREMENTS.
21. THE CONTRACTOR SHALL USE ALL NECESSARY SAFETY PRECAUTIONS TO AVOID CONTACT WITH OVERHEAD AND UNDERGROUND UTILITIES, POWER LINES, ETC.
22. THESE DRAWINGS DO NOT INCLUDE NECESSARY COMPONENTS FOR CONSTRUCTION SAFETY. THESE EXCLUSIONS DO NOT RELIEVE THE CONTRACTOR FROM PROVIDING ANY REQUIRED SAFETY EQUIPMENT, SUPPLIES, OR APPARATUS AS NEEDED TO EXECUTE THE WORK EFFECTIVELY AND SAFELY AS OUTLINES IN THE PLANS AND SPECIFICATIONS. THE CONTRACTOR ACCEPTS ANY AND ALL LIABILITY FROM THE CONTRACTOR'S FAILURE TO PROVIDE A SAFE WORK ENVIRONMENT.

ENVIRONMENTAL

23. THE CONTRACTOR SHALL PROVIDE AND INSTALL ALL NECESSARY STORM WATER, EROSION, AND SEDIMENTATION CONTROL MEASURES IN ACCORDANCE WITH THE FDEP "FLORIDA STORM WATER, EROSION AND SEDIMENTATION CONTROL INSPECTOR'S MANUAL". IT IS THE RESPONSIBILITY OF THE CONTRACTOR TO CONTROL AND PREVENT EROSION AND TRANSPORT OF SEDIMENT TO SURFACE DRAINS AND TO DITCHES DURING CONSTRUCTION.
24. STOCKPILES SHALL BE PROTECTED AT ALL TIMES BY ON–SITE DRAINAGE CONTROLS WHICH PREVENT EROSION OF THE STOCKPILED MATERIAL. CONTROL OF DUST FROM SUCH STOCKPILES IS REQUIRED, DEPENDING UPON THEIR LOCATION AND THE EXPECTED LENGTH OF TIME THE STOCKPILES WILL BE PRESENT. IN NO CASE SHALL ANY STOCKPILED MATERIAL REMAIN AFTER THIRTY (30) CALENDAR DAYS.
25. STORM WATER INLETS IN THE VICINITY OF THE PROJECT SHALL BE PROTECTED BY SEDIMENT TRAPS SUCH AS SECURED HAY BALES, SOD, STONE, ETC., WHICH SHALL BE MAINTAINED AND MODIFIED AS REQUIRED BY CONSTRUCTION PROGRESS, AND WHICH MUST BE APPROVED BY THE ENGINEER BEFORE INSTALLATION. THIS WILL BE MAINTAINED TO PREVENT DEGRADATION OF THE WATERS OF THE COUNTY AND STATE.
26. SEDIMENT BASINS AND TRAPS, PERIMETER BERMS, SEDIMENT BARRIERS, VEGETATIVE BUFFERS, AND OTHER MEASURES INTENDED TO TRAP SEDIMENT AND/OR PREVENT THE TRANSPORT OF SEDIMENT ONTO ADJACENT PROPERTIES, OR INTO EXISTING BODIES OF WATER, MUST BE INSTALLED, CONSTRUCTED, OR IN THE CASE OF VEGETATIVE BUFFERS, PROTECTED FROM DISTURBANCE, AS A FIRST STEP IN THE LAND ALTERATION PROCESS. SUCH SYSTEMS SHALL BE FULLY OPERATIVE BEFORE ANY OTHER DISTURBANCE OF THE SITE BEGINS. EARTHEN STRUCTURES INCLUDING BUT NOT LIMITED TO BERMS, EARTH FILTERS, DAMS OR DIKES SHALL BE STABILIZED AND PROTECTED FROM DRAINAGE DAMAGE OR EROSION WITHIN ONE (1) WEEK OF INSTALLATION.
27. ALL SWALES, DITCHES, AND CHANNELS LEADING FROM THE SITE SHALL BE PROTECTED FROM SILTATION AND EROSION PRIOR TO THE START OF CONSTRUCTION AND MAINTAINED THRU THE CONTRACT TERM. ALL SODDING SHALL BE PERFORMED WITHIN THREE (3) DAYS OF EXCAVATION.
28. SOIL DISPLACED BY CONSTRUCTION WILL BE REMOVED. EROSION CONTROL SHALL BE IMPLEMENTED IN AREAS WHICH ARE CONSIDERED ENVIRONMENTALLY SENSITIVE. EROSION CONTROL SYSTEMS SHALL BE REQUIRED FOR ALL WORK WITHIN JURISDICTIONAL AREAS. THESE SYSTEMS MAY INCLUDE STAKED HAY BALES, SILT SCREENS, FILTER FABRIC, AND TURBIDITY SCREENS.
29. ALL EROSION AND POLLUTION CONTROL DEVICES SHALL BE CHECKED REGULARLY, ESPECIALLY AFTER EACH RAINFALL AND SHALL BE CLEANED OUT AND/OR REPAIRED AS REQUIRED.
30. THE CONTRACTOR SHALL NOT ENTER UPON OR IN ANY WAY ALTER WETLAND AREAS THAT MAY BE ON OR NEAR THE CONSTRUCTION SITE. ALL WORK IN THE VICINITY OF OPEN WATER AND/OR WETLANDS IS TO BE PERFORMED IN COMPLIANCE WITH THE ENVIRONMENTAL REGULATIONS AND/OR PERMITS FOR THE SITE. THE CONTRACTOR WILL BE RESPONSIBLE FOR ANY FINES RESULTING FROM HIS VIOLATION OF ANY REGULATIONS OR PERMIT CONDITIONS.
31. CONTRACTOR SHALL PROVIDE PROTECTIVE MATTING, FUEL CONTAINMENT AND ALL OTHER MATERIALS, EQUIPMENT AND LABOR TO PROTECT THE STAGING AREA DURING CONSTRUCTION.
32. CONTRACTOR SHALL, PRIOR TO BEGINNING CONSTRUCTION, SUBMIT A "FUELING SPILL PREVENTION PLAN" THAT SHALL CLEARLY INDICATE HOW FUEL SPILLS WILL BE PREVENTED WHEN FUELING BOTH WITHIN AND OUTSIDE OF THE STAGING AREA.

RIGHT–OF–WAY

33. ALL CONSTRUCTION ACTIVITIES SHALL BE LIMITED TO WITHIN THE MANATEE COUNTY RIGHT–OF–WAY, OTHER PUBLIC RIGHT–OF–WAYS OR EASEMENTS SHOWN ON THE DRAWINGS.
34. THE CONTRACTOR SHALL EMPLOY A LAND SURVEYOR REGISTERED IN THE STATE OF FLORIDA TO REFERENCE AND RESTORE PROPERTY CORNER MONUMENTS, PINS, AND LANDMARKS THAT MAY BE DISTURBED BY CONSTRUCTION AT NO ADDITIONAL COST TO THE OWNER.
35. THE CONTRACTOR, PRIOR TO CONSTRUCTION AND RESTRICTING ANY TRAFFIC, MUST OBTAIN ANY REQUIRED RIGHTS–OF–WAY USE PERMITS AND A TRAFFIC CONTROL PLAN. THE CONTRACTOR SHALL OBTAIN ALL REQUIRED PERMITS FROM OTHER GOVERNMENTAL AGENCIES HAVING RELEVANT JURISDICTION. ALL MAINTENANCE AND PROTECTION OF TRAFFIC SHALL BE IN ACCORDANCE WITH THE APPLICABLE REQUIREMENTS OF THE CURRENT FLORIDA DEPARTMENT OF TRANSPORTATION "STANDARD PLANS FOR ROAD CONSTRUCTION MAINTENANCE OF TRAFFIC" INDEX 102–600 THROUGH 102–680. A TRAFFIC CONTROL PLAN SHALL BE SUPPLIED BY THE CONTRACTOR AT THE PRE–CONSTRUCTION MEETING, PER SPECIFICATIONS 01570.
36. THE CONTRACTOR SHALL BE RESPONSIBLE FOR REPLACING ALL DAMAGED STORM WATER STRUCTURES, PIPING, ENTRANCE PIPE AND HEADWALLS WHETHER SHOWN ON THE PLANS OR NOT. THE HEADWALLS SHALL BE REPLACED IN ACCORDANCE WITH F.D.O.T. STANDARDS, OR THE APPLICABLE JURISDICTION.
37. IT IS THE RESPONSIBILITY OF THE CONTRACTOR TO ESTABLISH IN THE FIELD THE RIGHT–OF–WAY LINES, BASE LINES, BENCH MARKS (ELEV.), CENTER LINES, AND STATIONING AS REQUIRED TO CONSTRUCT THIS PROJECT.
38. THE CONTRACTOR SHALL BE RESPONSIBLE FOR COORDINATING WITH PROPERTY OWNERS PRIOR TO PERFORMING ANY WORK ON THE OWNER'S DRIVEWAY. CONTRACTOR SHALL MAINTAIN SAFE ACCESS TO THE PROPERTY AT ALL TIMES DURING CONSTRUCTION.
39. A RIGHT OF ENTRY AGREEMENT SHALL BE OBTAINED BY THE CONSTRUCTION MANAGER FROM THE PROPERTY OWNER BEFORE ANY DRIVEWAY CONSTRUCTION WORK IS DONE OUTSIDE OF THE RIGHT–OF–WAY OR EASEMENT.

UTILITIES

40. LOCATIONS, ELEVATIONS AND DIMENSIONS OF EXISTING UTILITIES, STRUCTURES AND OTHER FEATURES ARE SHOWN TO THE BEST INFORMATION AVAILABLE AT THE TIME OF PREPARATION OF THESE PLANS BUT DO NOT PURPORT TO BE ABSOLUTELY CORRECT. THERE MAY BE OTHER IMPROVEMENTS, UTILITIES, ETC. WHICH ARE WITHIN THE PROJECT AREA AND WHICH HAVE NOT BEEN LOCATED OR IDENTIFIED, MAY NOT BE IN THE EXACT LOCATION SHOWN OR RELOCATED SINCE THE PREPARATION OF THESE PLANS. THE CONTRACTOR SHALL VERIFY, PRIOR TO CONSTRUCTION, THE LOCATIONS, ELEVATIONS AND DIMENSIONS OF ALL EXISTING UTILITIES STRUCTURES AND OTHER FEATURES (WHETHER OR NOT SHOWN ON THE PLANS) THAT MAY EFFECT HIS WORK. ALL EXISTING UTILITIES TO BE EXTENDED, CROSSED OR CONNECTION POINTS SHALL BE EXPOSED PRIOR TO CONSTRUCTION TO VERIFY LOCATION AND ELEVATION. ANY DISCREPANCIES OR CONFLICTS FOUND SHALL BE BROUGHT TO THE ENGINEER'S ATTENTION FOR RESOLUTION.
41. THE CONTRACTOR SHALL PROTECT ALL EXISTING STRUCTURES, WATER AND SEWER LINES, STORM DRAINS, UTILITIES, DRIVEWAYS, SIDEWALKS, SIGNS, MAIL BOXES, FENCES, TREES, LANDSCAPING, AND ANY OTHER IMPROVEMENT OR FACILITY IN THE CONSTRUCTION AREA. THE CONTRACTOR SHALL REPAIR AND/OR REPLACE ANY DAMAGED ITEM DUE TO HIS CONSTRUCTION ACTIVITIES TO EQUAL OR BETTER THAN PRE–CONSTRUCTION CONDITIONS AT NO ADDITIONAL COST TO THE OWNER.
42. THE CONTRACTOR SHALL USE APPROPRIATE TECHNIQUES, AS APPROVED, RECOMMENDED OR OFFERED BY FLORIDA POWER AND LIGHT TO PREVENT UNDERMINING OF POWER POLES DURING CONSTRUCTION. IF HOLDING OF POWER POLES IS RECOMMENDED OR REQUIRED BY THE UTILITY, THE CONTRACTOR SHALL COORDINATE THIS ACTIVITY WITH THE UTILITY AND BEAR ALL RELATED COSTS.
43. ANY TEMPORARY SHUTDOWNS FOR MODIFICATIONS OF EXISTING UTILITY SYSTEMS THAT MUST REMAIN IN SERVICE DURING CONSTRUCTIONS SHALL BE KEPT TO A MINIMUM AND SHALL BE COORDINATED WITH AND APPROVED BY THE MANATEE COUNTY UTILITY OPERATIONS DEPARTMENT IN ACCORDANCE WITH THE CONTRACT DOCUMENTS. IT IS NOTED THAT TEMPORARY SHUTDOWNS MAY BE RESTRICTED TO CERTAIN HOURS AT ANY TIME OF THE DAY OR NIGHT AND WILL BE COMPLETED AT NO ADDITIONAL COST TO THE OWNER.
44. THE ELEVATIONS OF THE UTILITY SERVICES AND LATERALS HAVE BEEN ASSUMED ON THE BASIS OF TYPICAL ANTICIPATED SOIL COVERAGE. CONTRACTOR SHALL NOT RELY ON THIS INFORMATION FOR CONSTRUCTION, BUT SHALL BE RESPONSIBLE FOR FIELD LOCATIONS (HORIZONTAL AND VERTICAL) OF ALL UTILITIES CROSSING THE PROPOSED FORCE MAIN. CONTRACTOR SHALL INCLUDE IN THE UNIT COST OF THE SUBJECT FORCE MAIN CONSTRUCTION, THE COST OF UTILITY ADJUSTMENTS NECESSARY TO ATTAIN DESIGN MINIMUM SEPARATION FOR UTILITIES CONFLICTING WITH THE CONSTRUCTION OF THE PROPOSED FORCE MAIN. INTERRUPTIONS OF ANY EXISTING UTILITY SERVICES SHALL BE NOTICED TO EFFECTED CUSTOMERS A MINIMUM OF 48 HOURS IN ADVANCE AND SHALL NOT EXCEED 4 HOURS IN DURATION.

RESTORATION

45. ALL RESTORATION WORK PERFORMED THROUGHOUT THE PROJECT SHALL CONFORM TO EXISTING LINES AND GRADES UNLESS SHOWN OTHERWISE.
46. ALL DISTURBED GRASSED AREAS SHALL BE SODDED UNLESS OTHERWISE INDICATED. THE TYPE OF SOD USED TO REPLACE OWNER MAINTAINED AREAS IN RIGHT–OF–WAY SHALL BE COORDINATED WITH THE PROPERTY OWNER.
47. ALL CONCRETE THRUST BLOCKS INSTALLED FOR TESTING PURPOSES AND NOT REQUIRED FOR THE OPERATION OF THE PIPELINE SHALL BE REMOVED AND DISPOSED OF BY THE CONTRACTOR, PRIOR TO FINAL ACCEPTANCE, AT NO ADDITIONAL COST TO THE OWNER.
48. ASPHALT DRIVES THAT ARE CUT SHALL BE RESTORED PER SECTION 02513 OF THE SPECIFICATIONS.
49. CONCRETE DRIVEWAYS OR SIDEWALKS THAT ARE CUT SHALL BE RESTORED TO MATCH EXISTING PER MANATEE COUNTY PUBLIC WORKS STANDARDS AND ACCORDING TO THE 2020–2021 EDITIONS OF THE F.D.O.T. STANDARD PLANS FOR ROAD CONSTRUCTION CONCRETE SIDEWALK AND DRIVEWAYS INDEX 522–001 THROUGH 522–003.
50. WHENEVER A PERMANENT ROADWAY SURFACE IS NOT REPLACED IMMEDIATELY AFTER BACKFILLING AND COMPACTION OF THE NEWLY INSTALLED PIPE LINE IN AREAS WHERE TRAFFIC MUST PASS, THE CONTRACTOR SHALL INSTALL A TEMPORARY SURFACE CONSISTING OF NINE INCHES OF COMPACTED LIME ROCK BASE AND A COAT OF ASPHALT EMULSION. PERMANENT ROADWAY REPAIR SHALL BE PERFORMED A MAXIMUM OF TWENTY–ONE CALENDAR DAYS AFTER THE INITIAL OPEN CUTTING.
51. RESTORATION OF CURBS, DRIVEWAYS, SIDEWALKS, AND PLACEMENT OF SOD SHALL BE COMPLETED AS SOON AS THE CONTRACTOR HAS COMPLETED WORK IN THE AREA OF IMPACT. RESTORATION SHALL BE COMPLETED NO MORE THAN 10 DAYS FROM COMPLETION OF CONSTRUCTION IN THE AREA OF IMPACT.
52. ALL EXISTING FENCES DISTURBED DURING CONSTRUCTION SHALL BE REPAIRED OR REPLACED AND REINSTALLED BY THE CONTRACTOR AT NO ADDITIONAL COST TO THE OWNER UNLESS SHOWN TO BE REMOVED ON CONSTRUCTION PLANS.
53. WHERE CONCRETE REPAIRS ARE NECESSARY AND EXPANSION OR CONTRACTION JOINTS ARE PRESENT, CONTRACTOR SHALL REMOVE AND REPLACE CONCRETE UP TO THE NEXT EXPANSION OR CONTRACTION JOINT. ANY CURB REQUIRING CONCRETE REPAIRS SHALL BE REPLACED AT A MINIMUM OF TEN (10) FEET IN LENGTH.
54. ALL SIGNING AND PAVEMENT MARKINGS AFFECTED BY ANY IMPROVEMENTS, ROADWAY RESTORATION, OR MILLING AND RESURFACING SHALL BE RESTORED BY THE CONTRACTOR.
55. LANDSCAPE REMOVAL AND TREE REMOVAL SHALL BE PERFORMED IN ACCORDANCE WITH THE CLEARING AND GRUBBING PAY ITEM IN MEASUREMENT AND PAYMENT SECTION 01150. CONTRACTOR TO RESTORE AFFECTED AREAS TO EXISTING CONDITION MATCHING EXISTING GRADE, MEETING COUNTY COMPACTION REQUIREMENTS. ALL AFFECTED LANDSCAPE AREAS SHALL BE RESTORED TO EXISTING CONDITION. ALL OTHER AREAS SHALL BE SODDED UNLESS OTHERWISE INDICATED.

CONSTRUCTION

56. THE EXHAUST SYSTEM OF ALL GASOLINE AND DIESEL ENGINES SHALL BE EQUIPPED WITH MUFFLERS THAT MEET THE EQUIPMENT MANUFACTURER'S REQUIREMENTS FOR NOISE SUPPRESSION. THE CONTRACTOR SHALL INSTALL NOISE ABATEMENT BAFFLES POSITIONED TO BREAK LINE–OF–SITE FROM THE NOISE SOURCE TO AFFECTED RESIDENCES, AS APPROVED BY THE ENGINEER.
57. NO MATERIAL SHALL BE STOCKPILED IN ROADWAYS. ALL DIRT AND DEBRIS SHALL BE REMOVED FROM THE JOB SITE DAILY. ROADS SHALL BE SWEPT DAILY AS PART OF DAILY CLEAN UP.
58. THE CONTRACTOR IS TO CONTROL ALL FUGITIVE DUST ORIGINATING ON THIS PROJECT BY WATERING OR OTHER METHODS AS REQUIRED.
59. INGRESS AND EGRESS TO ALL THE PROPERTIES IN THE CONSTRUCTION AREA SHALL BE MAINTAINED AT ALL TIMES.
60. PRIOR APPROVAL WILL BE REQUIRED FOR REMOVAL OR TRIMMING OF ANY TREE WITHIN THE CONSTRUCTION AREA.
61. THE CONTRACTOR SHALL PROVIDE ALL DEWATERING EQUIPMENT NECESSARY TO KEEP ALL EXCAVATIONS DRY. DEWATERING IS REQUIRED TO 18" BELOW TRENCH BOTTOM. REFER TO THE PLANS FOR ADDITIONAL DETAILS.
62. ALL PIPING AND FITTINGS USED ON THIS PROJECT SHALL BE AS NOTED ON THE PLANS AND IN THE CONTRACT DOCUMENT AND SHALL BE INSTALLED TO THE LINES AND GRADES SHOWN ON THE PLANS AND PROFILES.
63. ALL PIPE SHALL BE COLOR CODED TO CONFORM TO MANATEE COUNTY STANDARDS.
64. ALL FITTINGS FOR PRESSURE CLASS–RATED PIPE SHALL BE RESTRAINED DUCTILE IRON. FITTINGS AND PIPE JOINTS SHALL BE RESTRAINED PER THE DETAILS IN THE PLANS.
65. WHERE IT IS NECESSARY TO DEFLECT PIPE EITHER HORIZONTALLY OR VERTICALLY, PIPE DEFLECTION SHALL NOT EXCEED 75% OF THE MANUFACTURER'S MAXIMUM ALLOWABLE RECOMMENDED DEFLECTION.
66. ALL ROCKS OR STONES LARGER THAN SIX INCH DIAMETER SHALL BE REMOVED FROM THE BACKFILL MATERIAL. BACKFILL MATERIAL PLACED WITHIN ONE FOOT OF PIPING AND APPURTENANCES SHALL NOT CONTAIN ANY STONES LARGER THAN TWO INCH DIAMETER.
67. ONLY MANATEE COUNTY UTILITY OPERATIONS STAFF ARE AUTHORIZED TO OPERATE VALVES AND PUMP STATIONS ON COUNTY OWNED AND MAINTAINED UTILITY SYSTEMS.
68. ALL TEST POINT PIPING SHALL BE CUT LOOSE FROM THE CORPORATION STOP AND COMPLETELY REMOVED AND DISPOSED OF BY THE CONTRACTOR PRIOR TO FINAL ACCEPTANCE. A CORPORATION STOP PLUG SHALL BE INSTALLED AND THE CORPORATION STOP SHALL REMAIN IN PLACE.
69. ALL EXISTING MAINS THAT ARE BEING REPLACED SHALL BE ABANDONED IN PLACE UPON ACCEPTANCE AND ACTIVATION OF THE NEW MAINS. ABANDONED MAINS SHALL BE CUT AND CAPPED. REFER TO SECTION 02064 OF THE SPECIFICATIONS FOR CUT AND CAPPING ABANDONED PIPE.
70. FIELD CONDITIONS MAY NECESSITATE MINOR ALIGNMENT AND GRADE DEVIATION OF THE PROPOSED UTILITIES TO AVOID OBSTACLES, AS ORDERED BY THE ENGINEER.
71. THE CONTRACTOR SHALL OBTAIN AUTHORIZATION FROM THE MANATEE COUNTY UTILITIES DEPARTMENT (MCUD) WASTEWATER COMPLIANCE DIVISION PRIOR TO DEWATERING. COMPLETION OF A CONSTRUCTION DEWATERING AUTHORIZATION TO DISCHARGE APPLICATION IS REQUIRED. FILL OUT FORM AS COMPLETELY AS POSSIBLE AS MISSING INFORMATION DELAYS THE APPROVAL PROCESS.
72. THE MCUD WASTEWATER COMPLIANCE DIVISION WILL DETERMINE WHETHER A LETTER OF APPROVAL, A DISCHARGE AUTHORIZATION, OR A DISCHARGE PERMIT IS REQUIRED.
73. FOR SITES SUSPECTED OF CONTAMINATED GROUNDWATER MANATEE COUNTY WILL REQUIRE AN APPLICANT TO DEMONSTRATE THAT THE DISCHARGE MEETS THE MANATEE COUNTY SEWER USE ORDINANCE.
74. CONTRACTOR SHALL REPLACE ANY DAMAGED VALVE BOXES AND ADJUST THE BOX TO THE FINISHED GRADE. IF ANY RECLAIMED OR WATER MAINS INCLUDING SERVICE LINES ARE DAMAGED DURING CONSTRUCTION, THEY SHALL BE REPLACED FROM THE VALVE TO THE OTHER POINT OF CONNECTION OUTSIDE OF THE ROADWAY PER MANATEE COUNTY'S STANDARDS. SERVICES SHALL BE REPLACED FROM THE CORP STOP TO THE METER.

TRAFFIC CONTROL NOTES

75. TRAFFIC SHALL BE MAINTAINED IN ACCORDANCE WITH F.D.O.T. LATEST DESIGN STANDARDS NO. 102–600, 102–601, 102–602, 102–604 AND 102–660 DEPENDING ON THE OPERATION BEING PERFORMED.

    FOR ALL TWO–LANE, TWO–WAY, WORK OUTSIDE OF SHOULDER UTILIZE INDEX 102–601.
    FOR ALL TWO–LANE, TWO–WAY, WORK ON SHOULDER UTILIZE INDEX 102–602.
    FOR ALL TWO–LANE, TWO–WAY, INTERSECTION WORK UTILIZE INDEX 102–604
    FOR PEDESTRIAN CONTROL FOR CLOSURE OF SIDEWALK, UTILIZE INDEX 102–660.
76. CONTRACTOR TO COORDINATE WITH FDOT FOR ALL WORK DONE ON A STATE FACILITY.
77. PEDESTRIANS, BICYCLES, AND WHEELCHAIRS:
    AT THE END OF EACH WORKDAY OR WHENEVER THE WORK ZONE BECOMES INACTIVE, ANY DROP–OFF ADJACENT TO A SIDEWALK SHALL BE BACKFILLED AT A SLOPE NOT TO EXCEED 1:4, OR SHALL BE PROTECTED IN ACCORDANCE WITH DESIGN STANDARD 102–600.
78. THE CONTRACTOR IS RESPONSIBLE TO RETIME THE TRAFFIC SIGNALS WITHIN THE PROJECT LIMITS (INCLUDING LIMITS OF WORK ZONE TRAFFIC CONTROL) THAT ARE POTENTIALLY AFFECTED DURING VARIOUS PHASES OF CONSTRUCTION. COORDINATE ALL SIGNAL RETIME EFFORTS MUKUNDA GOPALAKRISHNA, P.E., PTOE, COUNTY TRAFFIC ENGINEER, AT 941–749–3500, EXT. 7813.
79. CONTRACTOR TO MAINTAIN VEHICLE DETECTION IN OPERATION FOR LANES THAT WILL REMAIN OPEN. CONTRACTOR TO COORDINATE ALL VEHICLE DETECTION ISSUES WITH AARON BURKETT OF MANATEE COUNTY AT 941–708–7509, OR AARON.BURKETT@MYMANATEE.ORG
80. MAINTENANCE OF TRAFFIC AND ANY SIGNAL RETIMING WILL BE THE RESPONSIBILITY OF THE CONTRACTOR.
81. ANY SIGNAL RETIMING REQUIRED FOR THE INTERSECTIONS IMPACTED BY THE PROJECT WILL BE THE RESPONSIBILITY OF THE CONTRACTOR. SIGNAL TIMING MODIFICATIONS TO BE SUBMITTED TO MANATEE COUNTY TRAFFIC DESIGN, ATTENTION MR. MUKUNDA GOPALAKRISHNA FOR REVIEW AND APPROVAL AT LEAST 15 WORKING DAYS BEFORE PROPOSED CHANGES. THIS DOES NOT GOVERN EMERGENCY SITUATIONS, PENDING THE APPROVAL OF THE ENGINEER.
82. A DETAILED MAINTENANCE OF TRAFFIC PLANS ARE TO BE SUBMITTED TO MANATEE COUNTY AND THE ENGINEER, BY THE CONTRACTOR, FOR REVIEW AND APPROVAL A MINIMUM OF 5 WORKING DAYS PRIOR TO PROPOSED IMPLEMENTATION OF PARTIAL OR FULL DAY CLOSURE, OR A MINIMUM OF 8 WORKING DAYS PRIOR TO PROPOSED IMPLEMENTATION OF A MULTI–DAY CLOSURE.
83. PRIOR TO COMMENCING WORK, CONTRACTOR SHALL RECEIVE APPROVAL FOR A COUNTY RIGHT–OF–WAY PERMIT. CONTACT MATT MERUCCI AT MATT.MEUCCI@MYMANATEE.ORG OR 941–708–7450 EXT 7342 FOR PERMIT APPLICATION. PERMIT FEES WILL BE WAIVED FOR ALL COUNTY CAPITAL IMPROVEMENT PROJECTS.
84. THE CONTRACTOR SHALL MAINTAIN TEMPORARY VEHICLE DETECTION ON ALL APPROACHES THROUGHOUT CONSTRUCTION UNTIL MANATEE COUNTY ACCEPTS THE PROJECT. ANY DAMAGE TO THE EXISTING DETECTION SYSTEM AT AN INTERSECTION MUST BE RESTORED WITHIN TWENTY–FOUR (24) HOURS AT NO ADDITIONAL COST TO THE COUNTY. MANATEE COUNTY TRAFFIC OPERATIONS DIVISION WILL ASSIST AS NEEDED WHENEVER POSSIBLE.
85. THE PRIME CONTRACTOR SHALL BE RESPONSIBLE FOR THE SIGNAL MAINTENANCE, TIMING AND OPERATION OF ANY AND ALL SIGNALS AND SIGNAGE FROM THE COMMENCEMENT TO THE ACCEPTANCE OF THE PROJECT (I.E.: EXISTING LOOPS CUT, SYSTEM COMMUNICATION TERMINATED, LANE OR PAVEMENT MODIFICATIONS, PEDESTRIAN MODIFICATIONS, TRAFFIC SIGNAL SCHOOL FLASHER, WARNING FLASHER, ROADWAY LIGHTING, COUNT STATIONS, AND ANY OTHER TRAFFIC RELATED DEVICE LOCATED WITHIN THE CONSTRUCTION ZONE). MANATEE COUNTY WILL ASSIST IN PROVIDING EXISTING SYSTEM TIMES WHEN POSSIBLE.

This document, together with the concepts and designs presented herein, as an instrument of service, is intended only for the specific purpose and client for which it was prepared. Reuse of and improper reliance on this document without written authorization and adaptation by Kimley–Horn and Associates, Inc. shall be without liability to Kimley–Horn and Associates, Inc.

No.	REVISIONS	DATE	BY

© 2022 KIMLEY–HORN AND ASSOCIATES, INC.
100 2ND AVENUE SOUTH, SUITE 105–N, ST. PETERSBURG, FL 33701
PHONE: 727–547–3999
WWW.KIMLEY–HORN.COM REGISTRY NO. 35106

KHA PROJECT 148400067
DATE FEB 2022
SCALE AS SHOWN
DESIGNED BY MAS
DRAWN BY GMB
CHECKED BY SNR

BAYSHORE YACHT BASIN FORCE MAIN AND LIFT STATION REPLACEMENT
MANATEE COUNTY FL

LICENSED PROFESSIONAL
MICHAEL A. SEMAGO, P.E.
FL LICENSE NUMBER 87501
DATE:

DRAWING INDEX & GENERAL NOTES

SHEET NUMBER G-2

This document, together with the concepts and designs presented herein, as an instrument of service, is intended only for the specific purpose and client for which it was prepared. Reuse of and improper reliance on this document without written authorization and adaptation by Kimley-Horn and Associates, Inc. shall be without liability to Kimley-Horn and Associates, Inc.

KIMLEY HORN LEGEND

EX. RECLAIMED WATER	X RCW — X RCW — X RCW
EX. FORCE MAIN	X-FM — X-FM — X-FM — X-FM
EX. POTABLE WATER	X WT — X WT — X WT
EX. SANITARY SEWER	X SS — X SS — X SS — X SS
EX. STORM	
EX. BURIED TELEPHONE/FIBER	X BT — X BT — X BT — X BT
EX. BURIED ELECTRIC	X BE — X BE — X BE — X BE
EX. GAS	X-GAS — X-GAS
EX. OVERHEAD ELECTRIC	X OE — X OE — X OE — X OE

ABBREVIATIONS

ARV – AIR RELEASE VALVE
BT – BURIED TELEPHONE
DIP – DUCTILE IRON PIPE
EX. – EXISTING
FM – FORCE MAIN
LF – LINEAR FEET
PVC – POLYVINYL CHLORIDE
RJ – RESTRAINED JOINT
R/W – RIGHT-OF-WAY
RCP – REINFORCED CONCRETE PIPE
RCW – RECLAIMED WATER MAIN
SS – SANITARY SEWER

PLAN CALLOUT LEGEND

7 KEY NOTE
A KEY TAG
2 — DETAIL NAME
SHEET WHERE DETAIL IS SHOWN

GENERAL NOTES

1. THE FOLLOWING MANATEE COUNTY VERTICAL CONTROL MONUMENT WAS RECOVERED AND UTILIZED FOR THE ELEVATIONS INDICATED HEREIN: "2015 136 88 02" NAVD 1988 ELEVATION 8.57'.
2. THIS SURVEY IS REFERENCED TO A GRID PROJECTION OF THE FLORIDA STATE PLANE COORDINATE SYSTEM (WEST ZONE NAD 1983/2011 ADJUSTMENT).
3. THIS IS NOT A BOUNDARY SURVEY. TITLE WORK WAS NOT PROVIDED.
4. THIS SURVEY IS SUBJECT TO PERTINENT EASEMENTS, RIGHTS-OF-WAY AND RESTRICTIONS OF RECORD, IF ANY.
5. THIS SURVEY DRAWING WAS PREPARED FOR THE EXCLUSIVE USE OF THE PARTY OR PARTIES CERTIFIED TO BELOW FOR THE EXPRESS PURPOSE STATED HEREON AND/OR CONTAINED IN THE CONTRACT BETWEEN HYATT SURVEY SERVICES, INC. AND THE CLIENT FOR THIS PROJECT. COPYING, DISTRIBUTING AND/OR USING THIS DRAWING, IN WHOLE OR IN PART FOR ANY PURPOSE OTHER THAN ORIGINALLY INTENDED WITHOUT WRITTEN CONSENT FROM HYATT SURVEY SERVICES, INC. IS STRICTLY PROHIBITED AND RENDERS THE SURVEYOR'S CERTIFICATION, SIGNATURE AND SEAL NULL AND VOID. ANY QUESTIONS CONCERNING THE CONTENT OR PURPOSE OF THIS DRAWING SHOULD BE DIRECTED TO HYATT SURVEY SERVICES, INC.

LEGEND

SITE CONTROL POINT
IRON ROD FOUND
CONCRETE MONUMENT FOUND
IRON PIPE FOUND
NAIL W/ DISC FOUND
R/W RIGHT-OF WAY
BM BENCHMARK

PP CONCRETE UTILITY POLE
WOOD UTILITY POLE
GUY WIRE
GAS WITNESS
SIGN
WATER METER
WATER VALVE
BACKFLOW PREVENTER
FIRE HYDRANT
SANITARY MANHOLE
STORM MANHOLE
CLEANOUT
AIR RELEASE VALVE
MAILBOX

UTILITY RISER
BOLLARD
UTILITY HANDHOLE
LIGHT POLE
TRAFFIC SIGNAL POLE
PED CROSSWALK POLE
UTILITY CABINET/BOX
COMMUNICATION WITNESS
SEWER VALVE
RECLAIM VALVE
ANTENNA
CONTROL PANEL

PALM
PINE
OAK
TREE

SITE CONTROL

DESIGNATION	NORTHING	EASTING	ELEVATION	DESCRIPTION
BM #1	1123317.236	465516.919	9.06'	IR (LB 7203)
BM #2	1122639.879	465515.342	7.48'	IR (LB 7203)
BM #3	1122606.551	466255.442	5.74'	IR (LB 7203)

VVH TABLE

VVH NUMBER	UTILITY	SIZE	MATERIAL	DEPTH OF COVER	COLOR	SURFACE TYPE	TRACER FOUND
1	FORCE MAIN	10"	PVC	2.90'	GREEN	GRASS	PLASTIC TAPE
2	GAS	2"	PVC	3.05'	YELLOW	GRASS	NONE
3	NO UTILITY FOUND	–	–	–	–	GRASS	–
4	BURIED TRAFFIC POWER	(2) 3"	PVC	2.80'	GRAY	GRASS	NONE
5	FORCE MAIN	10"	PVC	4.38'	GREEN	GRASS	NONE
6	WATER MAIN	6"	DUCTILE IRON	2.65'	GRAY	GRASS	NONE
7	NO UTILITY FOUND	–	–	–	–	GRASS	–
8	FORCE MAIN	10"	PVC	3.23'	GREEN	GRASS	PLASTIC TAPE
9	BURIED ELECTRIC	4"	PVC	2.35'	GRAY	GRASS	NONE
10	FORCE MAIN	10"	PVC	3.08'	GREEN	GRASS	PLASTIC TAPE
11	BURIED ELECTRIC	4"	PVC	2.66'	GRAY	GRASS	NONE

No.	REVISIONS	DATE	BY

Kimley»Horn

© 2022 KIMLEY-HORN AND ASSOCIATES, INC.
100 2ND AVENUE SOUTH, SUITE 105-N, ST. PETERSBURG, FL 33701
PHONE: 727-547-3999
WWW.KIMLEY-HORN.COM REGISTRY NO. 35106

KHA PROJECT 148400067
DATE FEB 2022
SCALE AS SHOWN
DESIGNED BY MAS
DRAWN BY GMB
CHECKED BY SNR

Manatee County FLORIDA

BAYSHORE YACHT BASIN FORCE MAIN AND LIFT STATION REPLACEMENT

MANATEE COUNTY FL

LICENSED PROFESSIONAL
MICHAEL A. SEMAGO, P.E.
FL LICENSE NUMBER 87501
DATE:

SURVEY & SUE NOTES

SHEET NUMBER
G-3

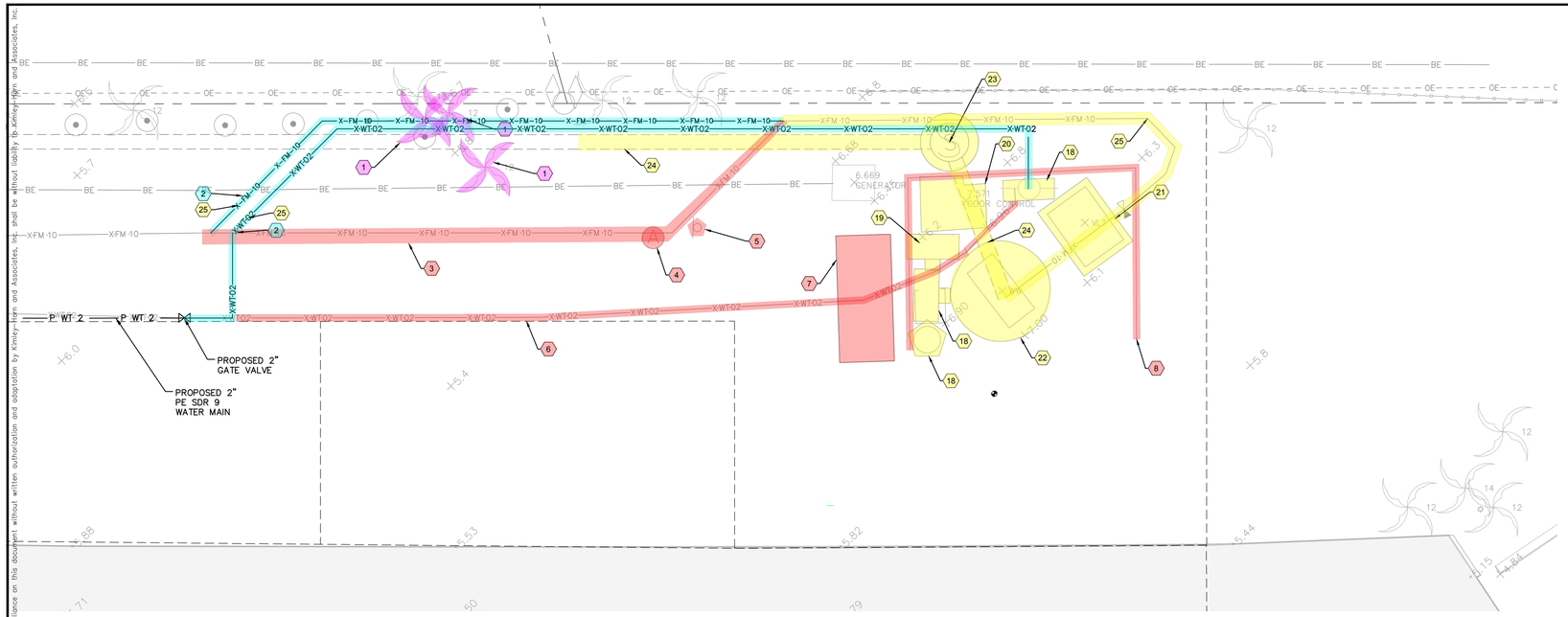

DEMOLITION

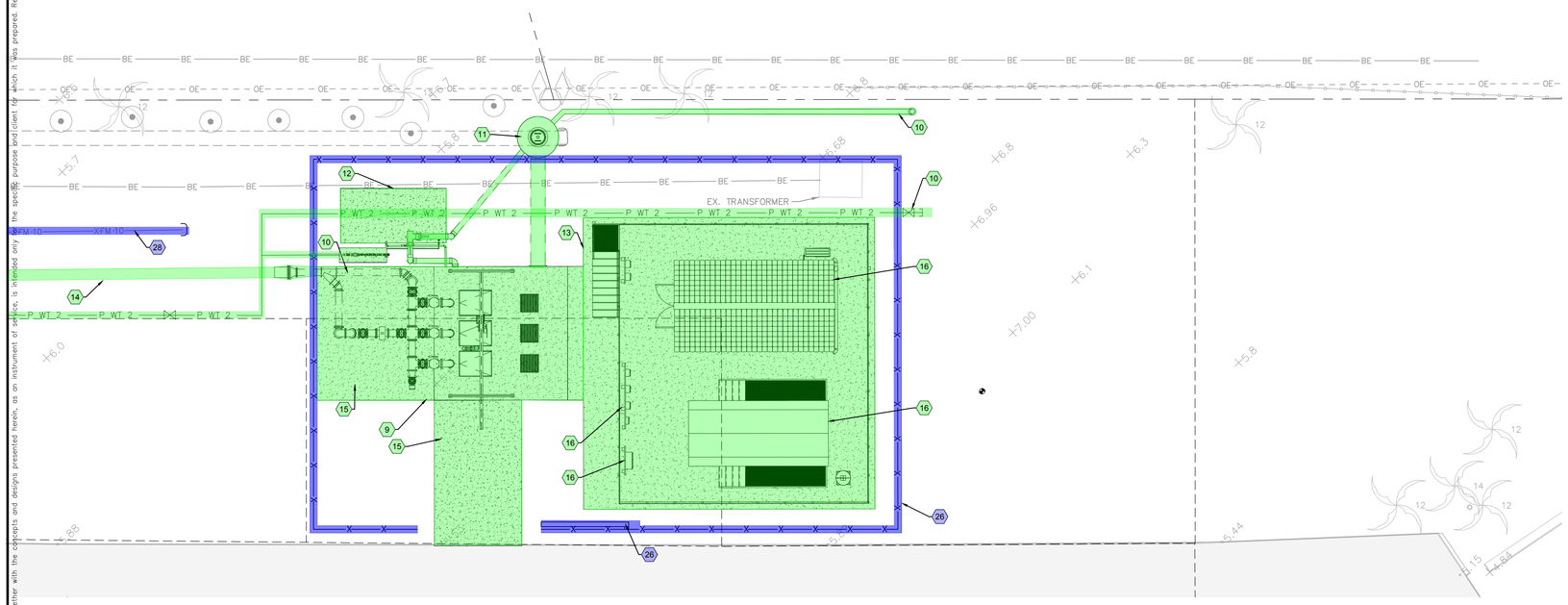

CONSTRUCTION

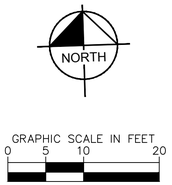

CONSTRUCTION SEQUENCING:

PHASE 1 DEMOLITION

1. REMOVE 3 TREES FROM UTILITY EASEMENT

PHASE 1 CONSTRUCTION

2. CONSTRUCT TEMPORARY 10" FORCE MAIN AND 2" WATER MAIN

PHASE 2 DEMOLITION

3. REMOVE SECTION OF EXISTING 10" FORCE MAIN (APPROXIMATELY 90 LF.).
4. REMOVE EXISTING ARV AND ACCESSORIES.
5. REMOVE EXISTING SIGN.
6. REMOVE EXISTING 2" WATER MAIN FROM EXISTING SERVICE UP TO PROPOSED CONNECTION.
7. COUNTY TO RELOCATE MOBILE GENERATOR AS NECESSARY.
8. REMOVE EXISTING SITE FENCE.

PHASE 2 CONSTRUCTION

9. CONSTRUCT PROPOSED CAST-IN-PLACE WETWELL LIFT STATION.
10. CONSTRUCT PROPOSED LIFT STATION PIPING AND UTILITY STUB OUTS.
11. INSTALL CUT-IN MANHOLE AND GRAVITY SEWER.
12. CONSTRUCT PROPOSED ODOR CONTROL EQUIPMENT STUB OUTS AND SLAB.
13. CONSTRUCT PROPOSED ELEVATED PLATFORM AND PLACE PREFABRICATED BUILDING AND GENERATOR.
14. INSTALL 16" PVC FORCE MAIN, SEE SHEETS C-7 -C-10.
15. CONSTRUCT CONCRETE SLAB, ACCESS DRIVE, AND OVERHEAD BRIDGE CRANE.
16. PERFORM ELECTRICAL EQUIPMENT CONNECTIONS.
17. COORDINATE WITH COUNTY FOR NEW LIFT STATION START UP.

PHASE 3 DEMOLITION

18. REMOVE EXISTING ANTENNA, BACKFLOW PREVENTER, AND DEMOLISH CONCRETE PADS.
19. REMOVE EXISTING ELECTRICAL PANELS AND EQUIPMENT, AND DEMOLISH EXISTING CONCRETE PADS.
20. DEMOLISH ODOR CONTROL SLAB AND REMOVE EQUIPMENT.
21. DEMOLISH EXISTING VALVE VAULT CONCRETE AND REMOVE EQUIPMENT.
22. DEMOLISH EXISTING WETWELL TOP SLAB AND TOP BARREL, REMOVE EXISTING PIPING, BRACKETS, FLOATS, HATCH, PUMP RAILS, AND PUMPS.
23. REMOVE EXISTING MANHOLE.
24. REMOVE EXISTING 24" SANITARY SEWER.
25. REMOVE EXISTING 10" FORCE MAIN (APPROX. 85 LF), TEMPORARY 10" FM (APPROX. 85 LF), AND TEMPORARY 2" WM (APPROX. 140 LF).

PHASE 3 CONSTRUCTION

26. CONSTRUCT SITE FENCE AND GATE.
27. CONSTRUCT LANDSCAPING AND IRRIGATION.
28. GROUT EXISTING 10" FORCE MAIN.

NOTE:
CONTRACTOR TO USE UTILITY EASEMENT FOR STAGING AND STORAGE OF MATERIALS.

This document, together with the concepts and designs presented herein, as an instrument of service, is intended only for the specific purpose and client for which it was prepared. Reuse of and improper reliance on this document without written authorization and adaptation by Kimley-Horn and Associates, Inc. shall be without liability to Kimley-Horn and Associates, Inc.

No.	REVISIONS	DATE	BY

Kimley»Horn

© 2022 KIMLEY-HORN AND ASSOCIATES, INC.
100 2ND AVENUE SOUTH, SUITE 105-N, ST. PETERSBURG, FL 33701
PHONE: 727-547-3999
WWW.KIMLEY-HORN.COM REGISTRY NO. 35106

KHA PROJECT 148400067
DATE FEB 2022
SCALE AS SHOWN
DESIGNED BY MAS
DRAWN BY GMB
CHECKED BY SNR

Manatee County FLORIDA

BAYSHORE YACHT BASIN FORCE MAIN AND LIFT STATION REPLACEMENT

MANATEE COUNTY FL

LICENSED PROFESSIONAL
MICHAEL A. SEMAGO, P.E.
FL LICENSE NUMBER 87501
DATE:

CONSTRUCTION PHASING PLAN

SHEET NUMBER
G-4

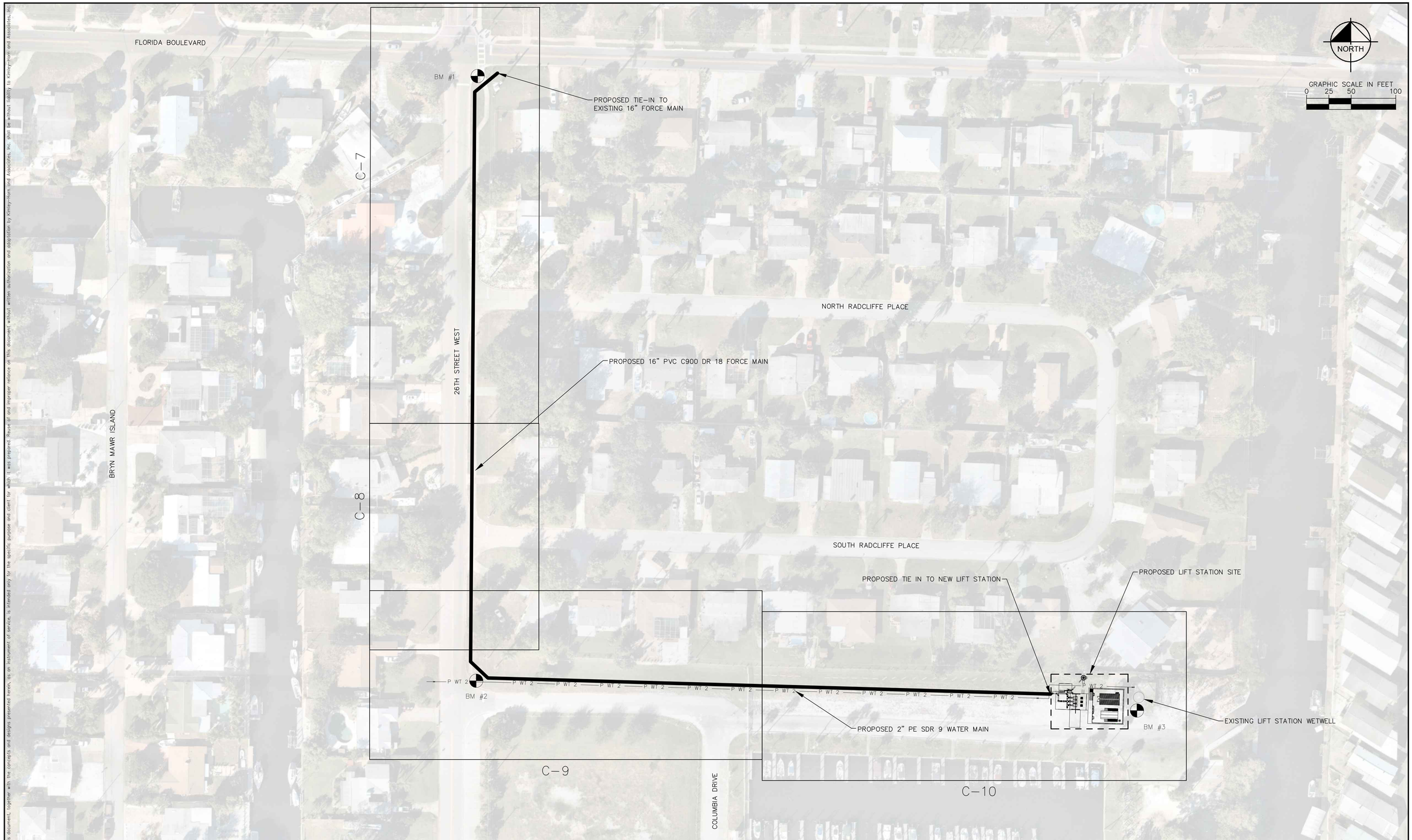

This document, together with the concepts and designs presented herein, as an instrument of service, is intended only for the specific purpose and client for which it was prepared. Reuse of and improper reliance on this document without written authorization and adaptation by Kimley-Horn and Associates, Inc. shall be without liability to Kimley-Horn and Associates, Inc.

No.	REVISIONS	DATE	BY

Kimley»Horn

© 2022 KIMLEY-HORN AND ASSOCIATES, INC.

100 2ND AVENUE SOUTH, SUITE 105-N, ST. PETERSBURG, FL 33701
PHONE: 727-547-3999
WWW.KIMLEY-HORN.COM REGISTRY NO. 35106

KHA PROJECT 148400067
DATE FEB 2022
SCALE AS SHOWN
DESIGNED BY MAS
DRAWN BY GMB
CHECKED BY SNR

Manatee County FLORIDA

BAYSHORE YACHT BASIN FORCE MAIN AND LIFT STATION REPLACEMENT

MANATEE COUNTY FL

LICENSED PROFESSIONAL
MICHAEL A. SEMAGO, P.E.
FL LICENSE NUMBER 87501
DATE:

KEY SHEET

SHEET NUMBER
G-5

GROUNDWATER / DEWATERING NOTE:

THE PRESENCE OF GROUNDWATER SHOULD BE ANTICIPATED ON THIS PROJECT. CONTRACTOR'S BID SHALL INCLUDE CONSIDERATION FOR THIS ISSUE. WHEN PERFORMING GRADING OPERATIONS DURING PERIODS OF WET WEATHER, PROVIDE ADEQUATE DEWATERING, DRAINAGE AND GROUND WATER MANAGEMENT TO CONTROL MOISTURE OF SOILS.

811 KNOW WHAT'S BELOW ALWAYS CALL 811 BEFORE YOU DIG
It's fast. It's free. It's the law.
www.callsunshine.com

This document, together with the concepts and designs presented herein, as an instrument of service, is intended only for the specific purpose and client for which it was prepared. Reuse of and improper reliance on this document without written authorization and adaptation by Kimley-Horn and Associates, Inc. shall be without liability to Kimley-Horn and Associates, Inc.

No.	REVISIONS	DATE	BY

Kimley»Horn

© 2022 KIMLEY-HORN AND ASSOCIATES, INC.
100 2ND AVENUE SOUTH, SUITE 105-N, ST. PETERSBURG, FL 33701
PHONE: 727-547-3999
WWW.KIMLEY-HORN.COM REGISTRY NO. 35106

KHA PROJECT	148400067
DATE	FEB 2022
SCALE	AS SHOWN
DESIGNED BY	MAS
DRAWN BY	GMB
CHECKED BY	SNR

Manatee County FLORIDA

BAYSHORE YACHT BASIN FORCE MAIN AND LIFT STATION REPLACEMENT

MANATEE COUNTY FL

LICENSED PROFESSIONAL

MICHAEL A. SEMAGO, P.E.

FL LICENSE NUMBER 87501

DATE:

LIFT STATION EXISTING SITE PLAN

SHEET NUMBER

C-1

This document, together with the concepts and designs presented herein, as an instrument of service, is intended only for the specific purpose and client for which it was prepared. Reuse of and improper reliance on this document without written authorization and adaptation by Kimley-Horn and Associates, Inc. shall be without liability to Kimley-Horn and Associates, Inc.

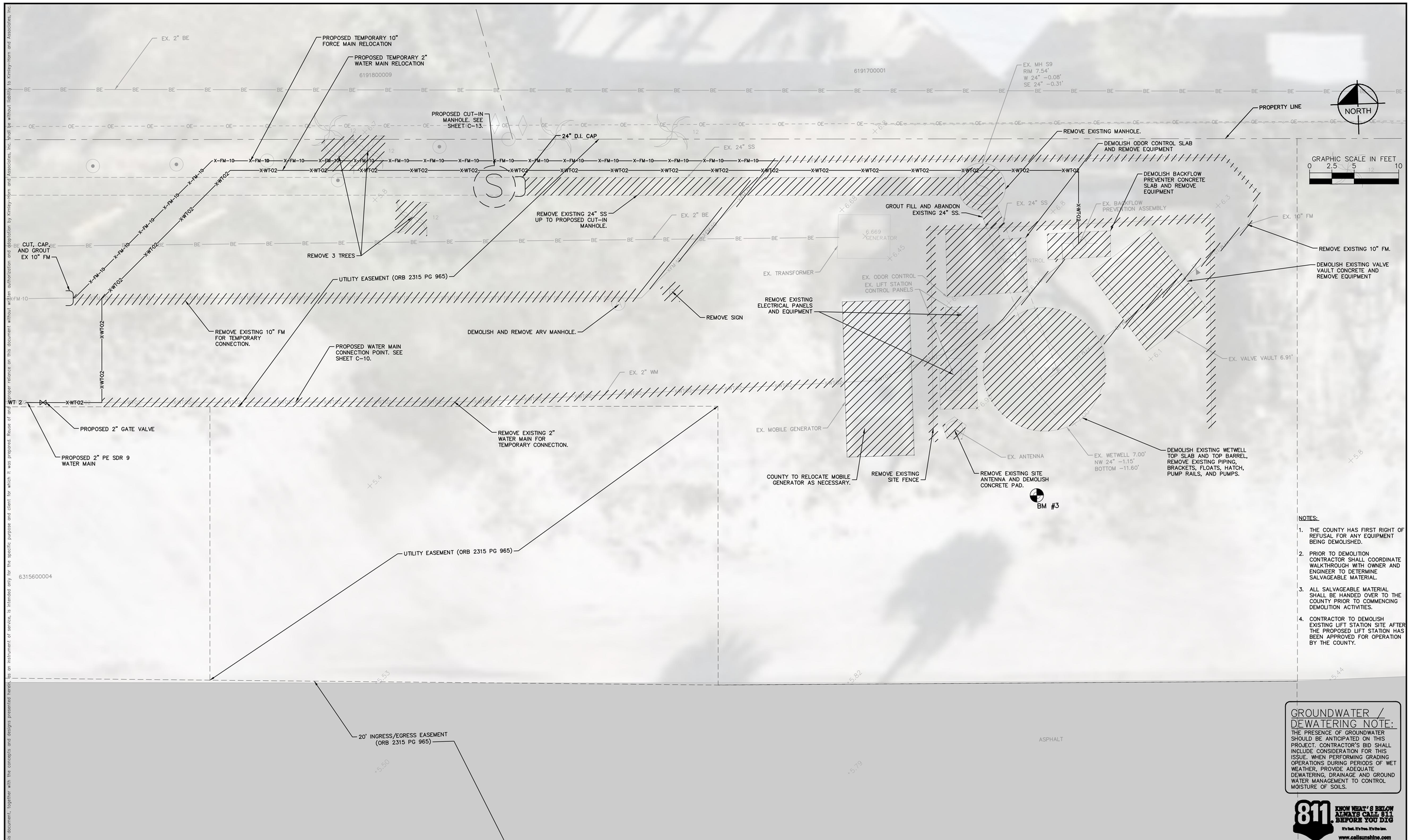

NOTES:

1. THE COUNTY HAS FIRST RIGHT OF REFUSAL FOR ANY EQUIPMENT BEING DEMOLISHED.
2. PRIOR TO DEMOLITION CONTRACTOR SHALL COORDINATE WALKTHROUGH WITH OWNER AND ENGINEER TO DETERMINE SALVAGEABLE MATERIAL.
3. ALL SALVAGEABLE MATERIAL SHALL BE HANDED OVER TO THE COUNTY PRIOR TO COMMENCING DEMOLITION ACTIVITIES.
4. CONTRACTOR TO DEMOLISH EXISTING LIFT STATION SITE AFTER THE PROPOSED LIFT STATION HAS BEEN APPROVED FOR OPERATION BY THE COUNTY.

GROUNDWATER / DEWATERING NOTE:

THE PRESENCE OF GROUNDWATER SHOULD BE ANTICIPATED ON THIS PROJECT. CONTRACTOR'S BID SHALL INCLUDE CONSIDERATION FOR THIS ISSUE. WHEN PERFORMING GRADING OPERATIONS DURING PERIODS OF WET WEATHER, PROVIDE ADEQUATE DEWATERING, DRAINAGE AND GROUND WATER MANAGEMENT TO CONTROL MOISTURE OF SOILS.

811 KNOW WHAT'S BELOW ALWAYS CALL 811 BEFORE YOU DIG
It's fast. It's free. It's the law.
www.callsunshine.com

No.	REVISIONS	DATE	BY

Kimley»Horn

© 2022 KIMLEY-HORN AND ASSOCIATES, INC.

100 2ND AVENUE SOUTH, SUITE 105-N, ST. PETERSBURG, FL 33701
PHONE: 727-547-3999
WWW.KIMLEY-HORN.COM REGISTRY NO. 35106

KHA PROJECT 148400067
DATE FEB 2022
SCALE AS SHOWN
DESIGNED BY MAS
DRAWN BY GMB
CHECKED BY SNR

Manatee County FLORIDA

BAYSHORE YACHT BASIN FORCE MAIN AND LIFT STATION REPLACEMENT

MANATEE COUNTY FL

LICENSED PROFESSIONAL
MICHAEL A. SEMAGO, P.E.
FL LICENSE NUMBER 87501
DATE:

LIFT STATION DEMOLITION PLAN

SHEET NUMBER
C-2

This document, together with the concepts and designs presented herein, as an instrument of service, is intended only for the specific purpose and client for which it was prepared. Reuse of and improper reliance on this document without written authorization and adaptation by Kimley-Horn and Associates, Inc. shall be without liability to Kimley-Horn and Associates, Inc.

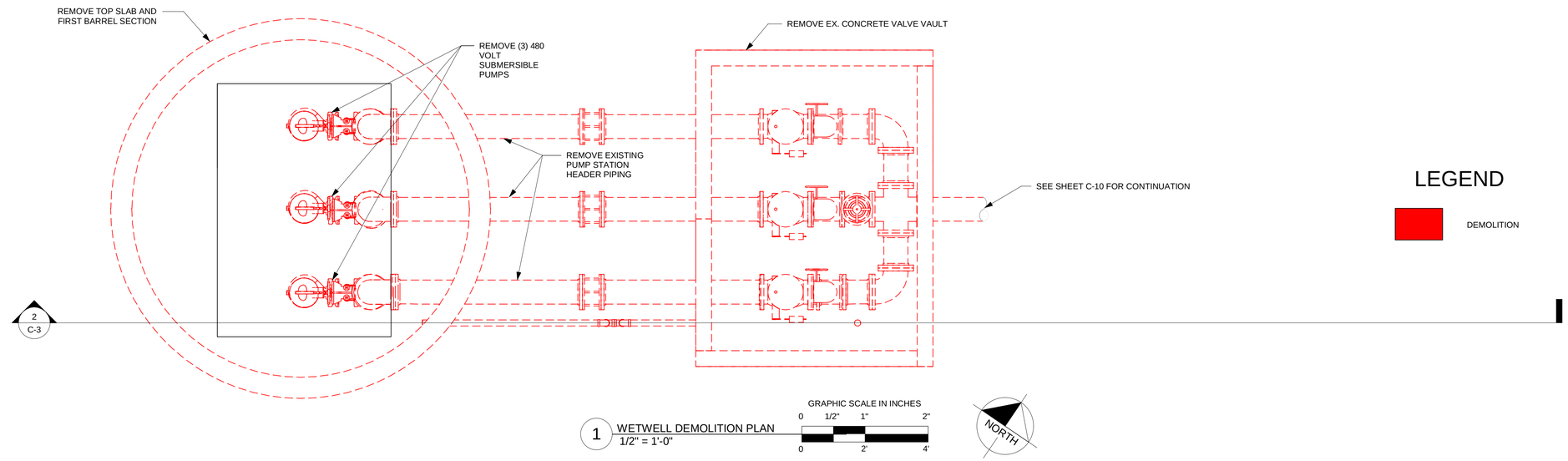

1 WETWELL DEMOLITION PLAN
1/2" = 1'-0"

LEGEND

DEMOLITION

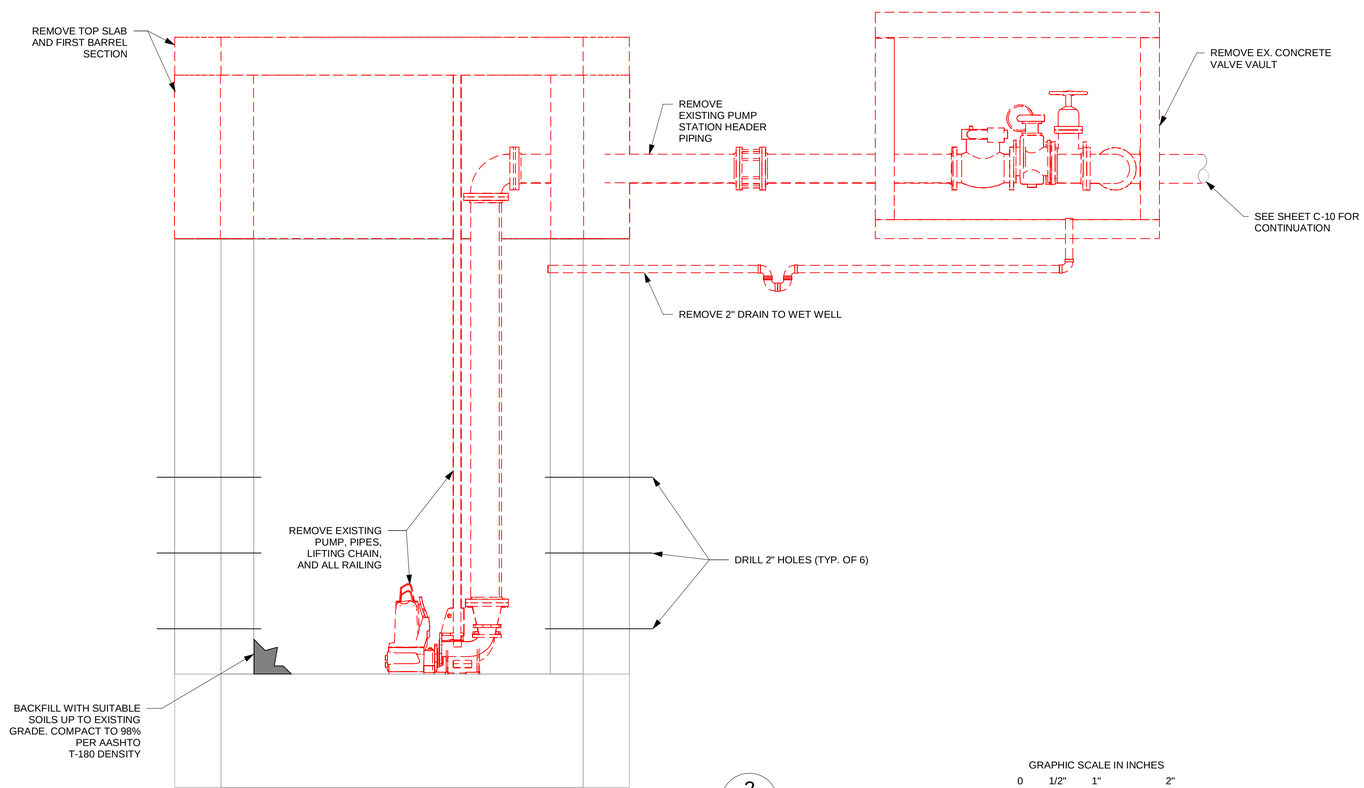

2 C-3 WETWELL DEMOLITION PROFILE
1/2" = 1'-0"

NOTES:

1. THE COUNTY HAS FIRST RIGHT OF REFUSAL FOR ANY EQUIPMENT BEING DEMOLISHED.
2. PRIOR TO DEMOLITION, CONTRACTOR SHALL COORDINATE WALKTHROUGHWITH OWNER AND ENGINEER TO DETERMINE SALVAGEABLE NMATERIAL.
3. ALL SALVAGEABLE MATERIAL SHALL BE HANDED OVER TO THE COUNTY PRIOR TO COMMENCING DEMOLITION ACTIVITIES.
4. CONTRACTOR TO DEMOLISH EXISTING LIFT STATION SITE AFTER THE PROPOSED LIFT STATION HAS BEEN APPROVED FOR OPERATIONBY THE COUNTY.

No.	REVISIONS	DATE	BY

Kimley»Horn

© 2022 KIMLEY-HORN AND ASSOCIATES, INC.

100 2ND AVE S, SUITE 105N, ST. PETERSBURG, FL 33701
PHONE: 727-547-3999
WWW.KIMLEY-HORN.COM REGISTRY No. 35106

KHA PROJECT 148400067
DATE FEB 2022
SCALE: AS SHOWN
DESIGNED BY: MAS
DRAWN BY: RLL
CHECKED BY: SNR

Manatee County FLORIDA

BAYSHORE YACHT BASIN FORCE MAIN AND LIFT STATION REPLACEMENT

MANATEE COUNTY FL

LICENSED PROFESSIONAL:

MICHAEL A. SEMAGO, P.E.
FL LICENSE NUMBER 87501
DATE:

EXISTING WETWELL DEMOLITION PLAN

SHEET NUMBER C-3

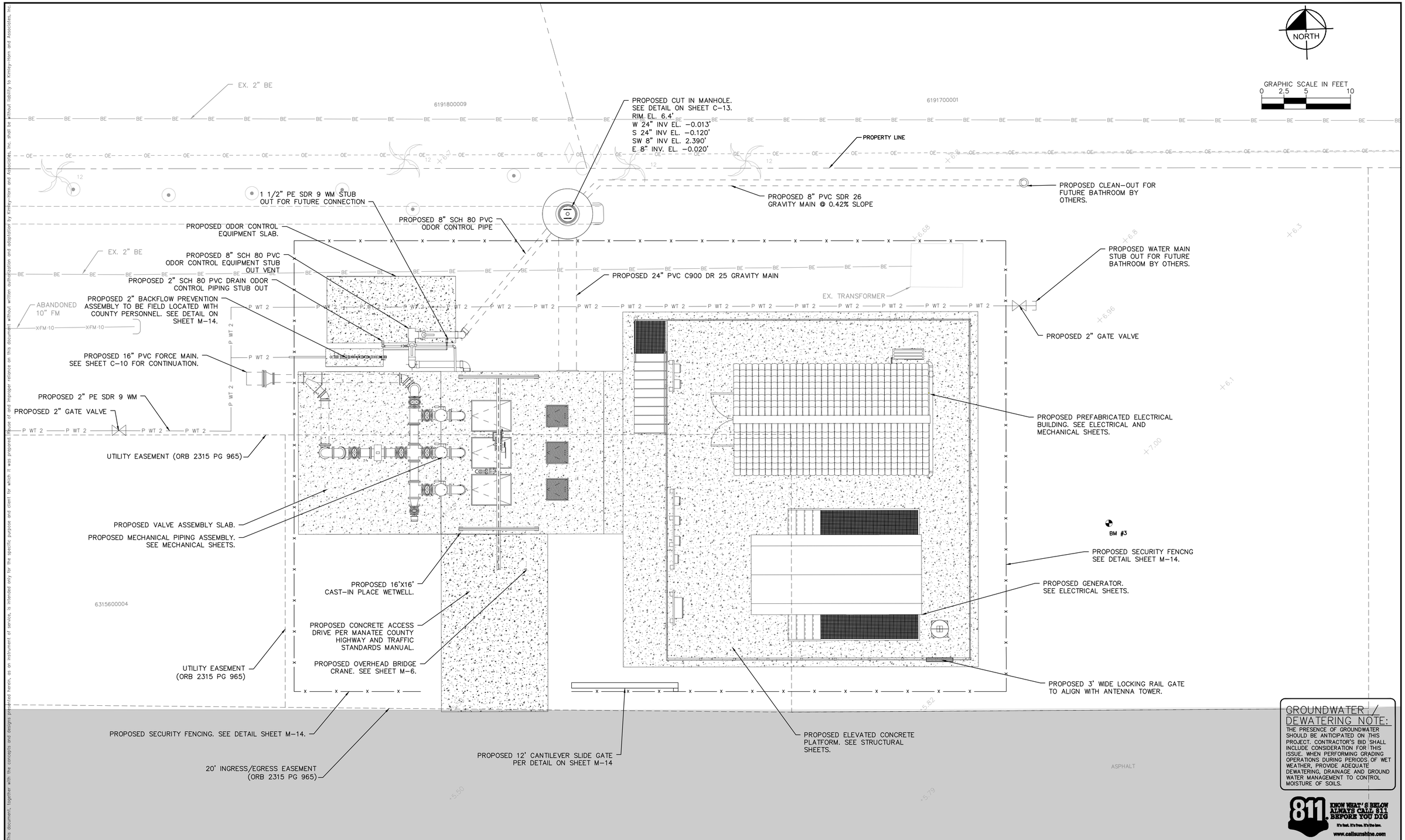

GROUNDWATER / DEWATERING NOTE:

THE PRESENCE OF GROUNDWATER SHOULD BE ANTICIPATED ON THIS PROJECT. CONTRACTOR'S BID SHALL INCLUDE CONSIDERATION FOR THIS ISSUE. WHEN PERFORMING GRADING OPERATIONS DURING PERIODS OF WET WEATHER, PROVIDE ADEQUATE DEWATERING, DRAINAGE AND GROUND WATER MANAGEMENT TO CONTROL MOISTURE OF SOILS.

811 KNOW WHAT'S BELOW ALWAYS CALL 811 BEFORE YOU DIG
It's fast. It's free. It's the law.
www.callsunshine.com

This document, together with the concepts and designs presented herein, as an instrument of service, is intended only for the specific purpose and client for which it was prepared. Reuse of and improper reliance on this document without written authorization and adaptation by Kimley-Horn and Associates, Inc. shall be without liability to Kimley-Horn and Associates, Inc.

No.	REVISIONS	DATE	BY

Kimley»Horn

© 2022 KIMLEY-HORN AND ASSOCIATES, INC.

100 2ND AVENUE SOUTH, SUITE 105-N, ST. PETERSBURG, FL 33701
PHONE: 727-547-3999
WWW.KIMLEY-HORN.COM REGISTRY NO. 35106

KHA PROJECT 148400067
DATE FEB 2022
SCALE AS SHOWN
DESIGNED BY MAS
DRAWN BY GMB
CHECKED BY SNR

Manatee County FLORIDA

BAYSHORE YACHT BASIN FORCE MAIN AND LIFT STATION REPLACEMENT

MANATEE COUNTY FL

LICENSED PROFESSIONAL
MICHAEL A. SEMAGO, P.E.
FL LICENSE NUMBER 87501
DATE:

LIFT STATION SITE PLAN

SHEET NUMBER
C-4

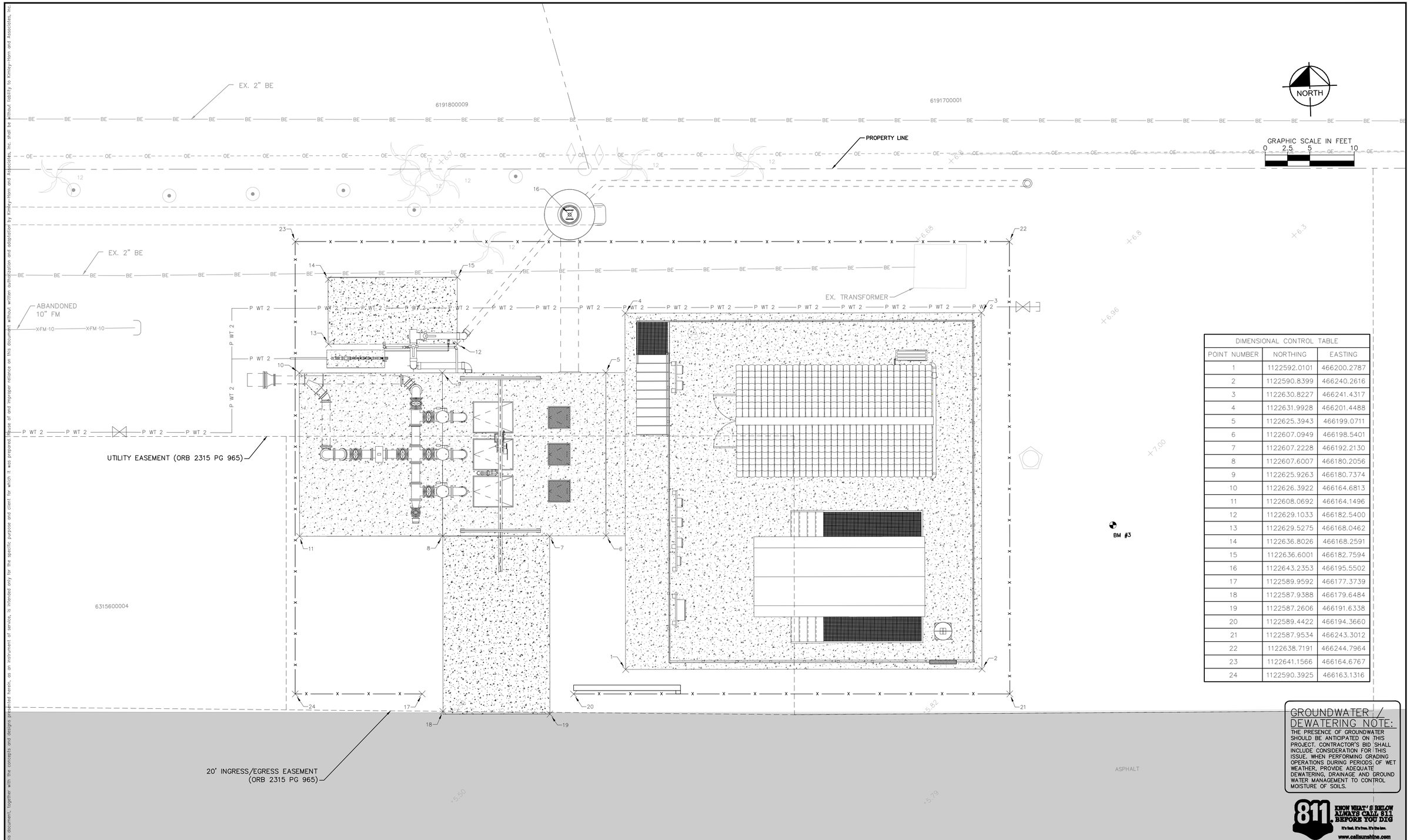

DIMENSIONAL CONTROL TABLE		
POINT NUMBER	NORTHING	EASTING
1	1122592.0101	466200.2787
2	1122590.8399	466240.2616
3	1122630.8227	466241.4317
4	1122631.9928	466201.4488
5	1122625.3943	466199.0711
6	1122607.0949	466198.5401
7	1122607.2228	466192.2130
8	1122607.6007	466180.2056
9	1122625.9263	466180.7374
10	1122626.3922	466164.6813
11	1122608.0692	466164.1496
12	1122629.1033	466182.5400
13	1122629.5275	466168.0462
14	1122636.8026	466168.2591
15	1122636.6001	466182.7594
16	1122643.2353	466195.5502
17	1122589.9592	466177.3739
18	1122587.9388	466179.6484
19	1122587.2606	466191.6338
20	1122589.4422	466194.3660
21	1122587.9534	466243.3012
22	1122638.7191	466244.7964
23	1122641.1566	466164.6767
24	1122590.3925	466163.1316

GROUNDWATER / DEWATERING NOTE:
THE PRESENCE OF GROUNDWATER SHOULD BE ANTICIPATED ON THIS PROJECT. CONTRACTOR'S BID SHALL INCLUDE CONSIDERATION FOR THIS ISSUE. WHEN PERFORMING GRADING OPERATIONS DURING PERIODS OF WET WEATHER, PROVIDE ADEQUATE DEWATERING, DRAINAGE AND GROUND WATER MANAGEMENT TO CONTROL MOISTURE OF SOILS.

811 KNOW WHAT'S BELOW ALWAYS CALL 811 BEFORE YOU DIG
It's fast. It's free. It's the law.
www.callsunshine.com

This document, together with the concepts and designs presented herein, as an instrument of service, is intended only for the specific purpose and client for which it was prepared. Reuse of and improper reliance on this document without written authorization and adaptation by Kimley-Horn and Associates, Inc. shall be without liability to Kimley-Horn and Associates, Inc.

No.	REVISIONS	DATE	BY

Kimley»Horn

© 2022 KIMLEY-HORN AND ASSOCIATES, INC.
100 2ND AVENUE SOUTH, SUITE 105-N, ST. PETERSBURG, FL 33701
PHONE: 727-547-3999
WWW.KIMLEY-HORN.COM REGISTRY NO. 35106

KHA PROJECT 148400067
DATE FEB 2022
SCALE AS SHOWN
DESIGNED BY MAS
DRAWN BY GMB
CHECKED BY SNR

Manatee County FLORIDA

BAYSHORE YACHT BASIN FORCE MAIN AND LIFT STATION REPLACEMENT

MANATEE COUNTY FL

LICENSED PROFESSIONAL
MICHAEL A. SEMAGO, P.E.
FL LICENSE NUMBER 87501
DATE:

DIMENSIONAL CONTROL PLAN

SHEET NUMBER
C-5

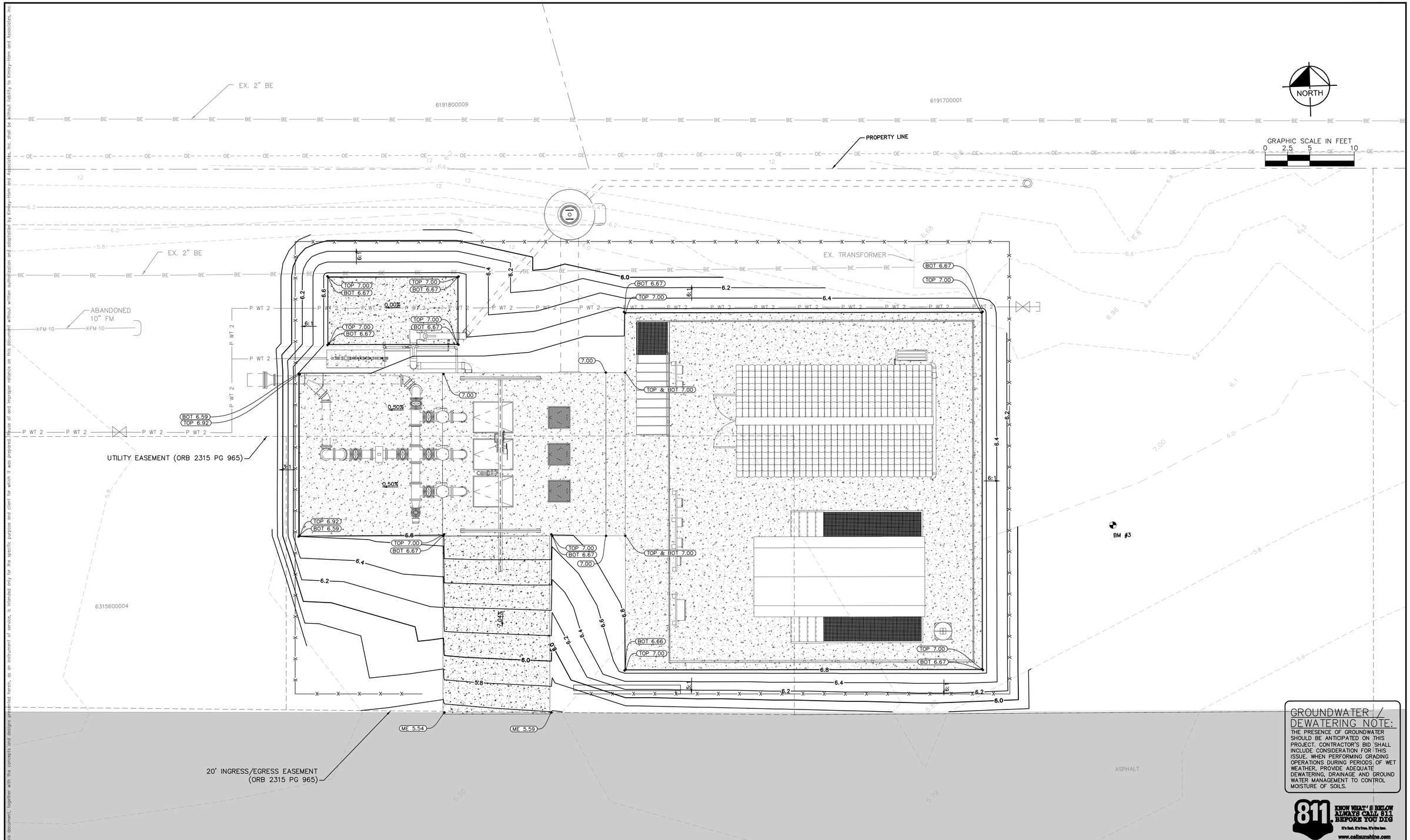

GROUNDWATER / DEWATERING NOTE:

THE PRESENCE OF GROUNDWATER SHOULD BE ANTICIPATED ON THIS PROJECT. CONTRACTOR'S BID SHALL INCLUDE CONSIDERATION FOR THIS ISSUE. WHEN PERFORMING GRADING OPERATIONS DURING PERIODS OF WET WEATHER, PROVIDE ADEQUATE DEWATERING, DRAINAGE AND GROUND WATER MANAGEMENT TO CONTROL MOISTURE OF SOILS.

811 KNOW WHAT'S BELOW ALWAYS CALL 811 BEFORE YOU DIG
It's free. It's fast. It's the law.
www.callsunshine.com

This document, together with the concepts and designs presented herein, as an instrument of service, is intended only for the specific purpose and client for which it was prepared. Reuse of and improper reliance on this document without written authorization and adaptation by Kimley-Horn and Associates, Inc. shall be without liability to Kimley-Horn and Associates, Inc.

No.	REVISIONS	DATE	BY

Kimley»Horn

© 2022 KIMLEY-HORN AND ASSOCIATES, INC.

100 2ND AVENUE SOUTH, SUITE 105-N, ST. PETERSBURG, FL 33701
PHONE: 727-547-3999
WWW.KIMLEY-HORN.COM REGISTRY NO. 35106

KHA PROJECT	148400067
DATE	FEB 2022
SCALE	AS SHOWN
DESIGNED BY	MAS
DRAWN BY	GMB
CHECKED BY	SNR

Manatee County FLORIDA

BAYSHORE YACHT BASIN FORCE MAIN AND LIFT STATION REPLACEMENT

MANATEE COUNTY FL

LICENSED PROFESSIONAL

MICHAEL A. SEMAGO, P.E.

FL LICENSE NUMBER 87501

DATE:

GRADING PLAN

SHEET NUMBER

C-6

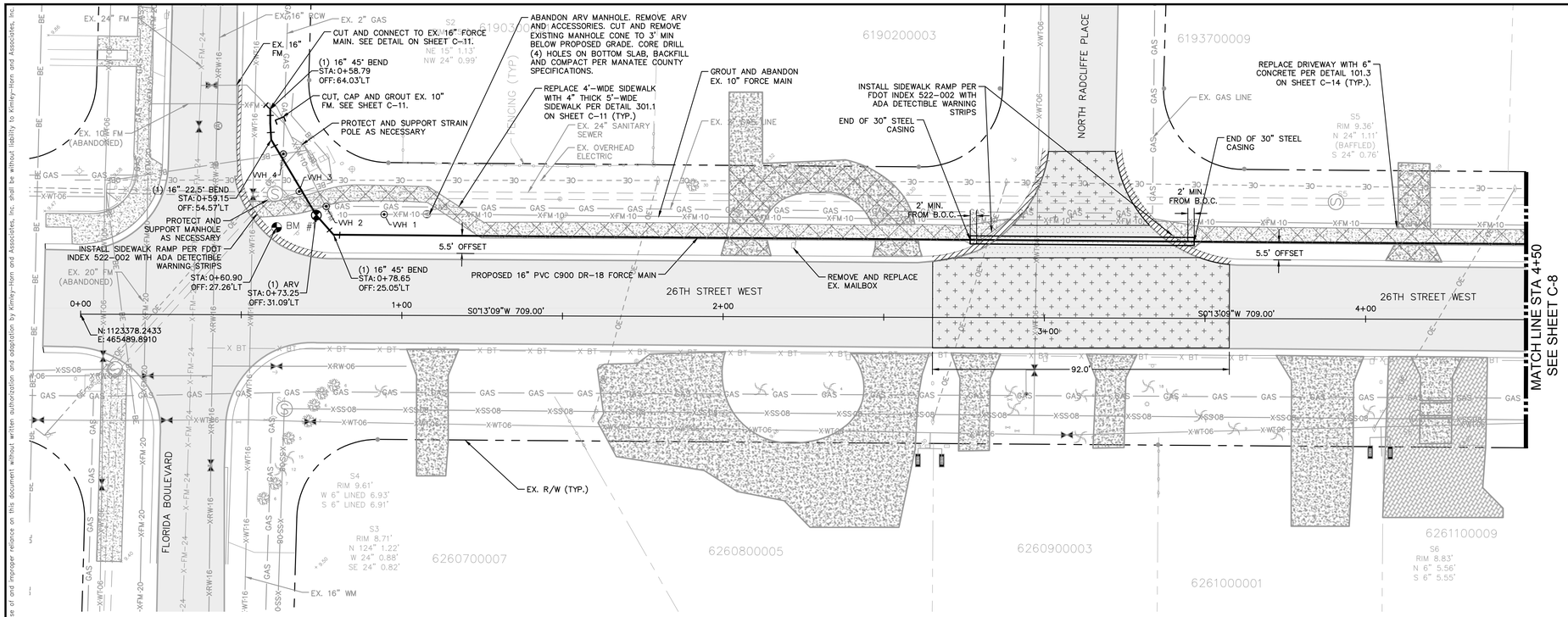

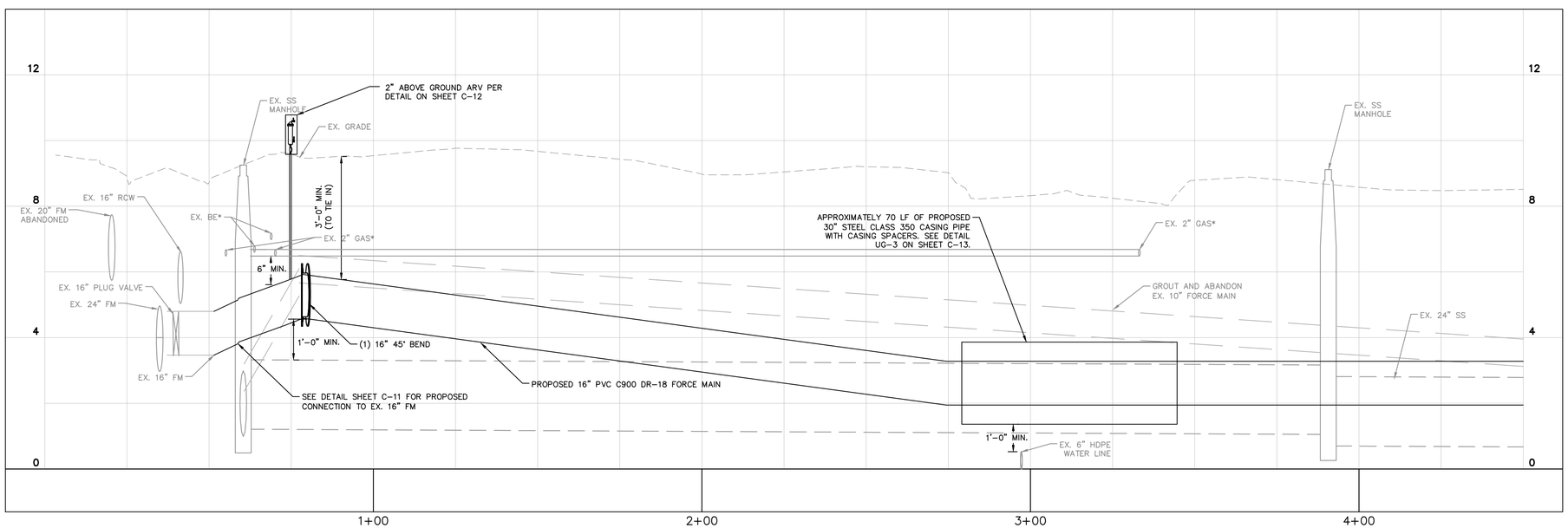

GRAPHIC SCALE IN FEET
0 10 20 40
HORIZONTAL SCALE: 1"=20'
VERTICAL SCALE: 1"=2'
ALL ELEVATIONS PER NAVD88

LEGEND

- OPEN CUT
- SIDEWALK/CONCRETE DRIVEWAY RESTORATION
- FULL ROADWAY RESTORATION
- MILLING AND RESURFACING
- CURB RESTORATION

*NOTES:
THE ELEVATIONS OF THE UTILITIES MARKED WITH AN ASTERISK (*) HAVE BEEN ASSUMED ON THE BASIS OF TYPICAL ANTICIPATED SOIL COVERAGE. CONTRACTOR SHALL NOT RELY ON THIS INFORMATION FOR CONSTRUCTION, BUT SHALL BE RESPONSIBLE FOR FIELD LOCATIONS (HORIZONTAL AND VERTICAL) OF ALL UTILITIES CROSSING THE PROPOSED FORCE MAIN. CONTRACTOR SHALL INCLUDE IN THE UNIT COST OF THE SUBJECT FORCE MAIN CONSTRUCTION, THE COST OF UTILITY ADJUSTMENTS NECESSARY TO ATTAIN DESIGN MINIMUM SEPARATION FOR UTILITIES CONFLICTING WITH THE CONSTRUCTION OF THE PROPOSED FORCE MAIN. INTERRUPTIONS OF ANY EXISTING UTILITY SERVICES SHALL BE NOTICED TO EFFECTED CUSTOMERS A MINIMUM OF 48 HOURS IN ADVANCE AND SHALL NOT EXCEED 4 HOURS IN DURATION.

WHERE CONCRETE REPAIRS ARE NECESSARY AND EXPANSION JOINTS ARE PRESENT, CONTRACTOR TO REMOVE AND REPLACE CONCRETE UP TO THE NEXT EXPANSION JOINT; OTHERWISE, REPLACE CONCRETE AS NECESSARY.

NOTES:

1. CONTRACTOR SHALL RESTRAIN PIPE PER RESTRAIN LENGTHS TABLE ON SHEET C-12
2. CONSTRUCTION DEWATERING SHALL BE CONDUCTED IN ACCORDANCE WITH ALL FEDERAL, STATE, AND LOCAL REQUIREMENTS INCLUDING BUT NOT LIMITED TO CHAPTERS 62-621.300 AND 62-620 OF THE FLORIDA ADMINISTRATIVE CODE (FAC)
4. EXISTING 2" GAS LINE AND BURIED ELECTRIC TO BE FIELD LOCATED WHERE NECESSARY PRIOR TO CONSTRUCTION
5. CONTRACTOR TO RESTORE ANY PIPELINE TRENCH DIGGING WITHIN 24 HOURS OF DISTURBANCE

GROUNDWATER / DEWATERING NOTE:
THE PRESENCE OF GROUNDWATER SHOULD BE ANTICIPATED ON THIS PROJECT. CONTRACTOR'S BID SHALL INCLUDE CONSIDERATION FOR THIS ISSUE. WHEN PERFORMING GRADING OPERATIONS DURING PERIODS OF WET WEATHER, PROVIDE ADEQUATE DEWATERING, DRAINAGE AND GROUND WATER MANAGEMENT TO CONTROL MOISTURE OF SOILS.

811 KNOW WHAT'S BELOW ALWAYS CALL 811 BEFORE YOU DIG
It's fast. It's free. It's the law.
www.callsunshine.com

No.	REVISIONS	DATE	BY

Kimley»Horn
© 2022 KIMLEY-HORN AND ASSOCIATES, INC.
100 2ND AVENUE SOUTH, SUITE 105-N, ST. PETERSBURG, FL 33701
PHONE: 727-547-3999
WWW.KIMLEY-HORN.COM REGISTRY NO. 35106

KHA PROJECT 148400067
DATE FEB 2022
SCALE AS SHOWN
DESIGNED BY MAS
DRAWN BY GMB
CHECKED BY SNR

Manatee County FLORIDA

BAYSHORE YACHT BASIN FORCE MAIN AND LIFT STATION REPLACEMENT
MANATEE COUNTY FL

LICENSED PROFESSIONAL
MICHAEL A. SEMAGO, P.E.
FL LICENSE NUMBER 87501
DATE:

PLAN AND PROFILE (STA 0+00 - STA 4+50)

SHEET NUMBER
C-7

This document, together with the concepts and designs presented herein, as an instrument of service, is intended only for the specific purpose and client for which it was prepared. Reuse of and improper reliance on this document without written authorization and adaptation by Kimley-Horn and Associates, Inc. shall be without liability to Kimley-Horn and Associates, Inc.

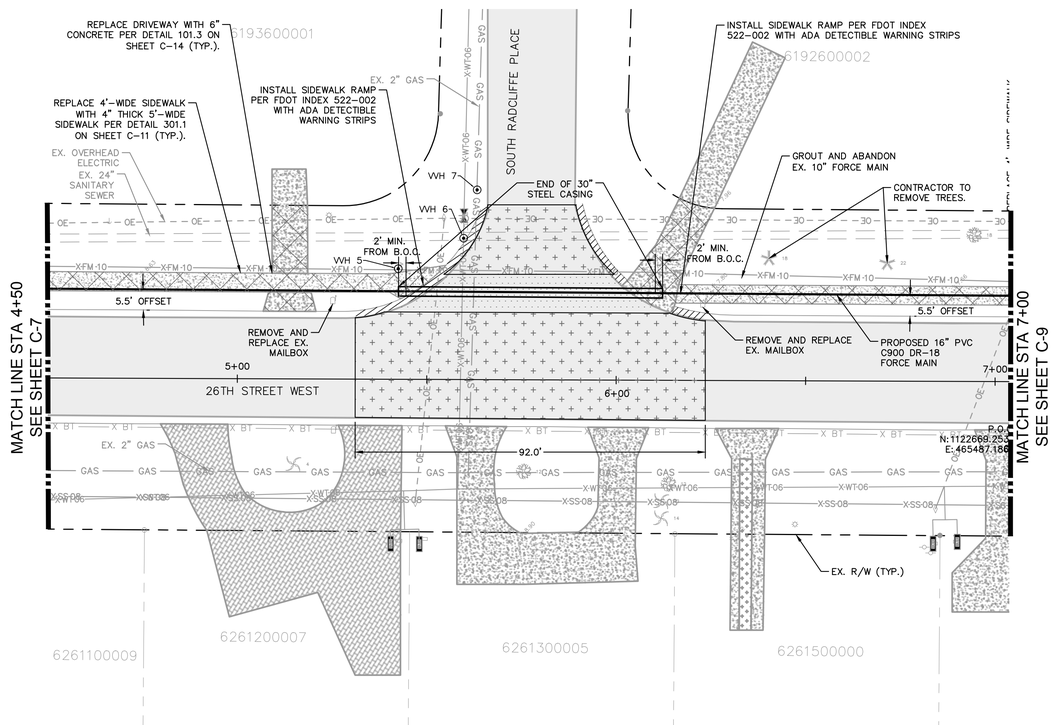

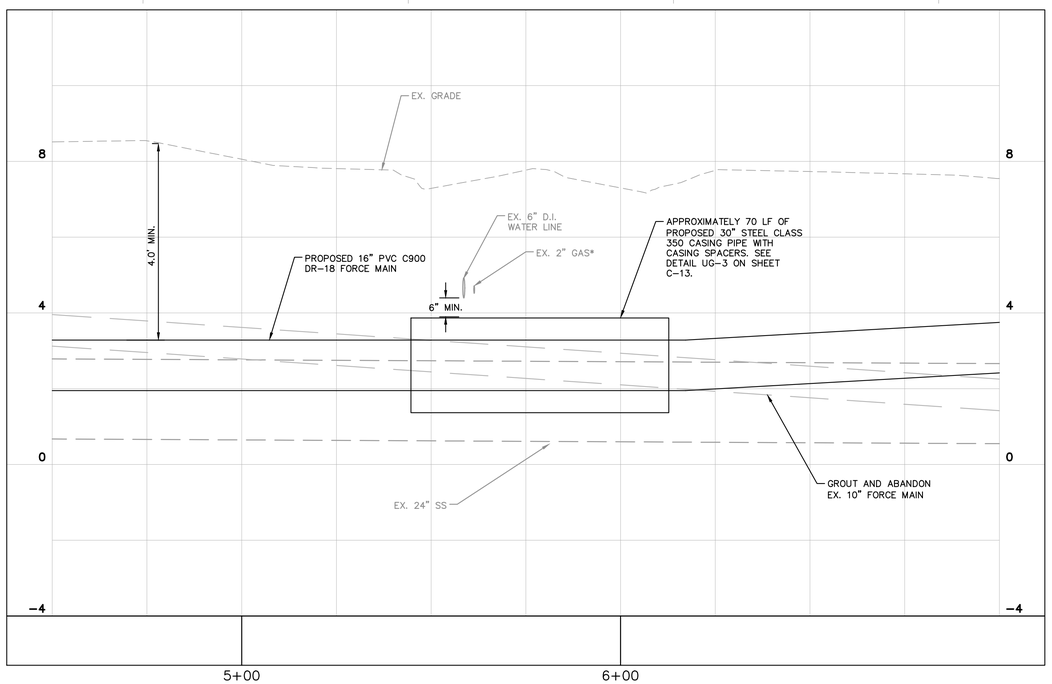

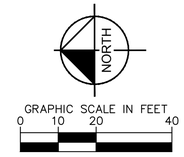

LEGEND

- OPEN CUT
- SIDEWALK/CONCRETE DRIVEWAY RESTORATION
- FULL ROADWAY RESTORATION
- MILLING AND RESURFACING
- CURB RESTORATION

*NOTES:
THE ELEVATIONS OF THE UTILITIES MARKED WITH AN ASTERISK (*) HAVE BEEN ASSUMED ON THE BASIS OF TYPICAL ANTICIPATED SOIL COVERAGE. CONTRACTOR SHALL NOT RELY ON THIS INFORMATION FOR CONSTRUCTION, BUT SHALL BE RESPONSIBLE FOR FIELD LOCATIONS (HORIZONTAL AND VERTICAL) OF ALL UTILITIES CROSSING THE PROPOSED FORCE MAIN. CONTRACTOR SHALL INCLUDE IN THE UNIT COST OF THE SUBJECT FORCE MAIN CONSTRUCTION, THE COST OF UTILITY ADJUSTMENTS NECESSARY TO ATTAIN DESIGN MINIMUM SEPARATION FOR UTILITIES CONFLICTING WITH THE CONSTRUCTION OF THE PROPOSED FORCE MAIN. INTERRUPTIONS OF ANY EXISTING UTILITY SERVICES SHALL BE NOTICED TO EFFECTED CUSTOMERS A MINIMUM OF 48 HOURS IN ADVANCE AND SHALL NOT EXCEED 4 HOURS IN DURATION.

WHERE CONCRETE REPAIRS ARE NECESSARY AND EXPANSION JOINTS ARE PRESENT, CONTRACTOR TO REMOVE AND REPLACE CONCRETE UP TO THE NEXT EXPANSION JOINT; OTHERWISE, REPLACE CONCRETE AS NECESSARY.

NOTES:

1. CONTRACTOR SHALL RESTRAIN PIPE PER RESTRAIN LENGTHS TABLE ON SHEET C-12
2. CONSTRUCTION DEWATERING SHALL BE CONDUCTED IN ACCORDANCE WITH ALL FEDERAL, STATE, AND LOCAL REQUIREMENTS INCLUDING BUT NOT LIMITED TO CHAPTERS 62-621.300 AND 62-620 OF THE FLORIDA ADMINISTRATIVE CODE (FAC)
4. EXISTING 2" GAS LINE AND BURIED ELECTRIC TO BE FIELD LOCATED WHERE NECESSARY PRIOR TO CONSTRUCTION
5. CONTRACTOR TO RESTORE ANY PIPELINE TRENCH DIGGING WITHIN 24 HOURS OF DISTURBANCE

GROUNDWATER / DEWATERING NOTE:
THE PRESENCE OF GROUNDWATER SHOULD BE ANTICIPATED ON THIS PROJECT. CONTRACTOR'S BID SHALL INCLUDE CONSIDERATION FOR THIS ISSUE. WHEN PERFORMING GRADING OPERATIONS DURING PERIODS OF WET WEATHER, PROVIDE ADEQUATE DEWATERING, DRAINAGE AND GROUND WATER MANAGEMENT TO CONTROL MOISTURE OF SOILS.

811 KNOW WHAT'S BELOW ALWAYS CALL 811 BEFORE YOU DIG
It's fast. It's free. It's the law.
www.callsunshine.com

No.	REVISIONS	DATE	BY

Kimley»Horn

© 2022 KIMLEY-HORN AND ASSOCIATES, INC.
100 2ND AVENUE SOUTH, SUITE 105-N, ST. PETERSBURG, FL 33701
PHONE: 727-547-3999
WWW.KIMLEY-HORN.COM REGISTRY NO. 35106

KHA PROJECT 148400067
DATE FEB 2022
SCALE AS SHOWN
DESIGNED BY MAS
DRAWN BY GMB
CHECKED BY SNR

Manatee County FLORIDA

BAYSHORE YACHT BASIN FORCE MAIN AND LIFT STATION REPLACEMENT
MANATEE COUNTY FL

LICENSED PROFESSIONAL
MICHAEL A. SEMAGO, P.E.
FL LICENSE NUMBER 87501
DATE:

PLAN AND PROFILE (STA 4+50 - STA 7+00)

SHEET NUMBER
C-8

This document, together with the concepts and designs presented herein, as an instrument of service, is intended only for the specific purpose and client for which it was prepared. Reuse of and improper reliance on this document without written authorization and adaptation by Kimley-Horn and Associates, Inc. shall be without liability to Kimley-Horn and Associates, Inc.

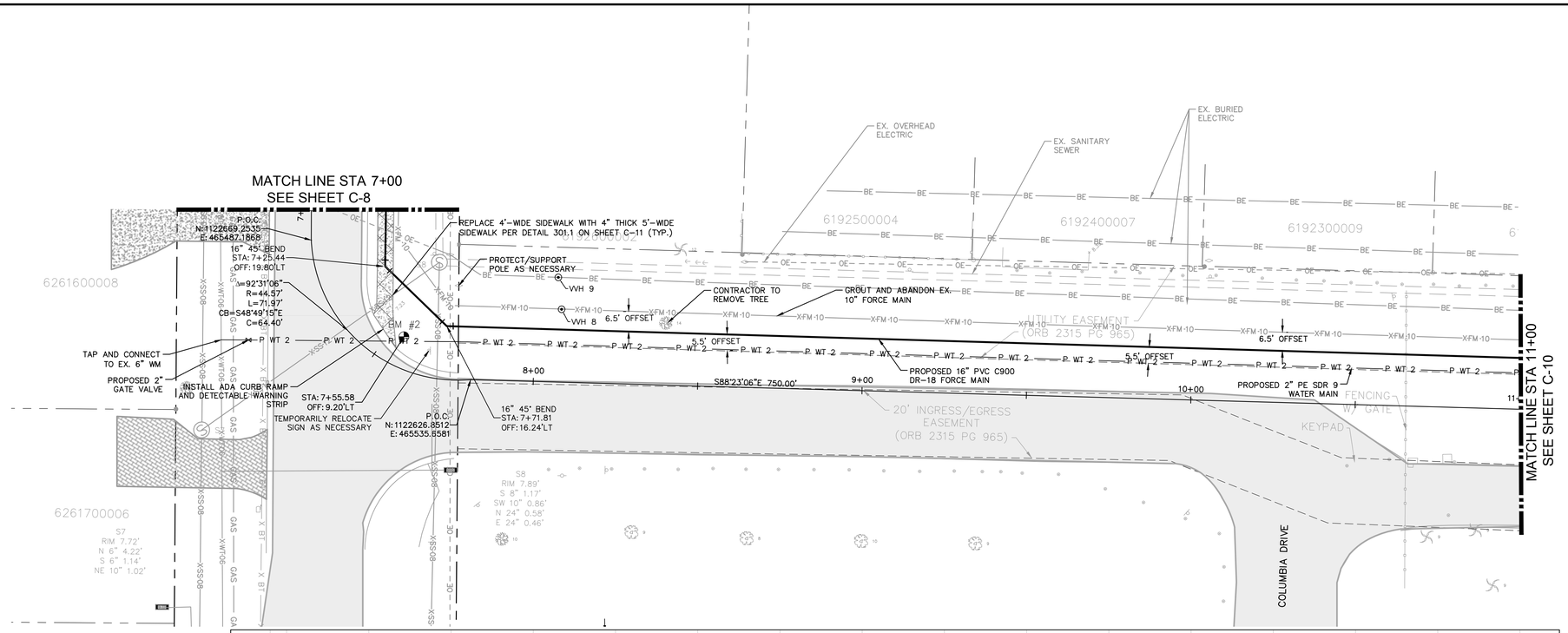

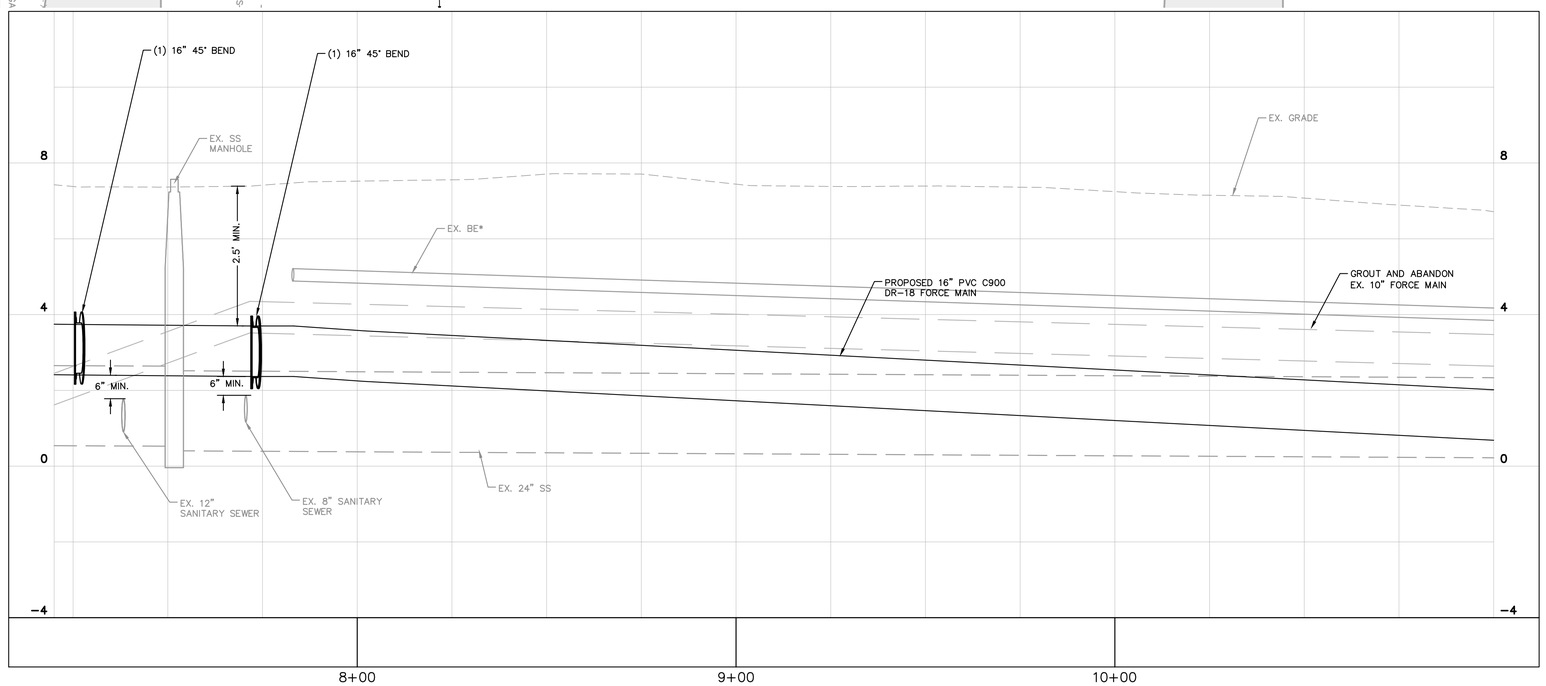

NORTH

GRAPHIC SCALE IN FEET
0 10 20 40

HORIZONTAL SCALE: 1"=20'
VERTICAL SCALE: 1"=2'
ALL ELEVATIONS PER NAVD88

LEGEND

- OPEN CUT
- SIDEWALK/CONCRETE DRIVEWAY RESTORATION
- FULL ROADWAY RESTORATION
- MILLING AND RESURFACING
- CURB RESTORATION

*NOTES:
THE ELEVATIONS OF THE UTILITIES MARKED WITH AN ASTERISK (*) HAVE BEEN ASSUMED ON THE BASIS OF TYPICAL ANTICIPATED SOIL COVERAGE. CONTRACTOR SHALL NOT RELY ON THIS INFORMATION FOR CONSTRUCTION, BUT SHALL BE RESPONSIBLE FOR FIELD LOCATIONS (HORIZONTAL AND VERTICAL) OF ALL UTILITIES CROSSING THE PROPOSED FORCE MAIN. CONTRACTOR SHALL INCLUDE IN THE UNIT COST OF THE SUBJECT FORCE MAIN CONSTRUCTION, THE COST OF UTILITY ADJUSTMENTS NECESSARY TO ATTAIN DESIGN MINIMUM SEPARATION FOR UTILITIES CONFLICTING WITH THE CONSTRUCTION OF THE PROPOSED FORCE MAIN. INTERRUPTIONS OF ANY EXISTING UTILITY SERVICES SHALL BE NOTICED TO EFFECTED CUSTOMERS A MINIMUM OF 48 HOURS IN ADVANCE AND SHALL NOT EXCEED 4 HOURS IN DURATION.

WHERE CONCRETE REPAIRS ARE NECESSARY AND EXPANSION JOINTS ARE PRESENT, CONTRACTOR TO REMOVE AND REPLACE CONCRETE UP TO THE NEXT EXPANSION JOINT; OTHERWISE, REPLACE CONCRETE AS NECESSARY.

NOTES:

1. CONTRACTOR SHALL RESTRAIN PIPE PER RESTRAIN LENGTHS TABLE ON SHEET C-12
2. CONSTRUCTION DEWATERING SHALL BE CONDUCTED IN ACCORDANCE WITH ALL FEDERAL, STATE, AND LOCAL REQUIREMENTS INCLUDING BUT NOT LIMITED TO CHAPTERS 62-621.300 AND 62-620 OF THE FLORIDA ADMINISTRATIVE CODE (FAC)
4. EXISTING 2" GAS LINE AND BURIED ELECTRIC TO BE FIELD LOCATED WHERE NECESSARY PRIOR TO CONSTRUCTION
5. CONTRACTOR TO RESTORE ANY PIPELINE TRENCH DIGGING WITHIN 24 HOURS OF DISTURBANCE

GROUNDWATER / DEWATERING NOTE:
THE PRESENCE OF GROUNDWATER SHOULD BE ANTICIPATED ON THIS PROJECT. CONTRACTOR'S BID SHALL INCLUDE CONSIDERATION FOR THIS ISSUE. WHEN PERFORMING GRADING OPERATIONS DURING PERIODS OF WET WEATHER, PROVIDE ADEQUATE DEWATERING, DRAINAGE AND GROUND WATER MANAGEMENT TO CONTROL MOISTURE OF SOILS.

811 KNOW WHAT'S BELOW ALWAYS CALL 811 BEFORE YOU DIG
It's fast. It's free. It's the law.
www.callsunshine.com

This document, together with the concepts and designs presented herein, as an instrument of service, is intended only for the specific purpose and client for which it was prepared. Reuse of and improper reliance on this document without written authorization and adaptation by Kimley-Horn and Associates, Inc. shall be without liability to Kimley-Horn and Associates, Inc.

No.	REVISIONS	DATE	BY

Kimley»Horn

© 2022 KIMLEY-HORN AND ASSOCIATES, INC.
100 2ND AVENUE SOUTH, SUITE 105-N, ST. PETERSBURG, FL 33701
PHONE: 727-547-3999
WWW.KIMLEY-HORN.COM REGISTRY NO. 35106

KHA PROJECT 148400067
DATE FEB 2022
SCALE AS SHOWN
DESIGNED BY MAS
DRAWN BY GMB
CHECKED BY SNR

Manatee County FLORIDA

BAYSHORE YACHT BASIN FORCE MAIN AND LIFT STATION REPLACEMENT
MANATEE COUNTY FL

LICENSED PROFESSIONAL
MICHAEL A. SEMAGO, P.E.
FL LICENSE NUMBER 87501
DATE:

PLAN AND PROFILE (STA 7+00 - STA 11+00)

SHEET NUMBER
C-9

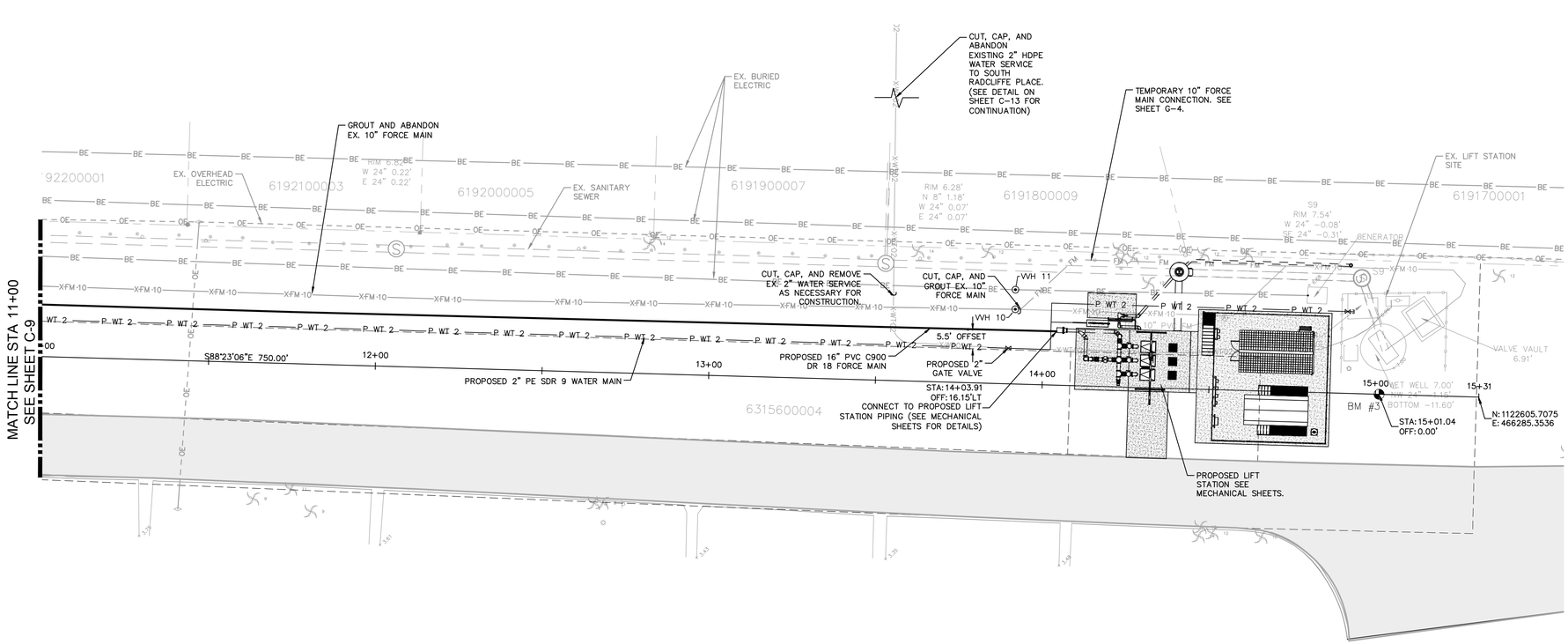

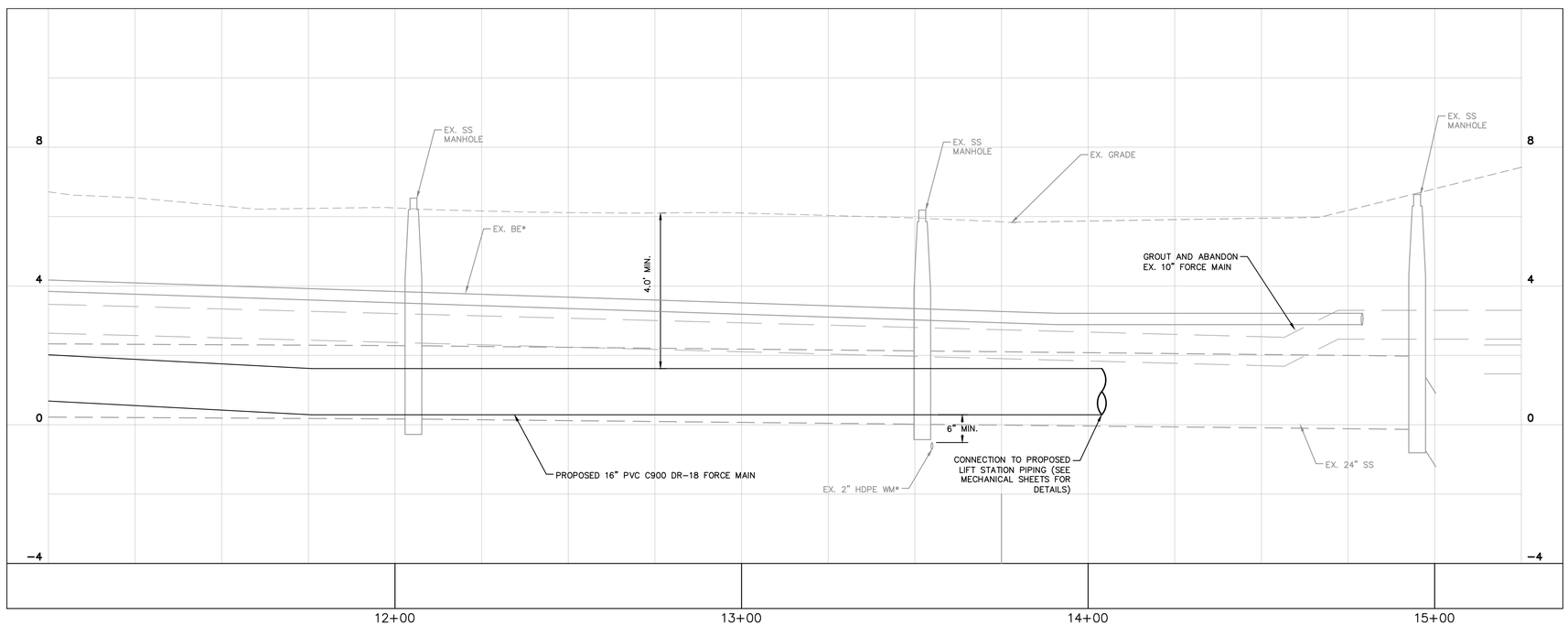

NORTH

GRAPHIC SCALE IN FEET
0 10 20 40

HORIZONTAL SCALE: 1"=20'
VERTICAL SCALE: 1"=2'
ALL ELEVATIONS PER NAVD88

LEGEND

- OPEN CUT
- SIDEWALK/CONCRETE DRIVEWAY RESTORATION
- FULL ROADWAY RESTORATION
- MILLING AND RESURFACING
- CURB RESTORATION

*NOTES:
THE ELEVATIONS OF THE UTILITIES MARKED WITH AN ASTERISK (*) HAVE BEEN ASSUMED ON THE BASIS OF TYPICAL ANTICIPATED SOIL COVERAGE. CONTRACTOR SHALL NOT RELY ON THIS INFORMATION FOR CONSTRUCTION, BUT SHALL BE RESPONSIBLE FOR FIELD LOCATIONS (HORIZONTAL AND VERTICAL) OF ALL UTILITIES CROSSING THE PROPOSED FORCE MAIN. CONTRACTOR SHALL INCLUDE IN THE UNIT COST OF THE SUBJECT FORCE MAIN CONSTRUCTION, THE COST OF UTILITY ADJUSTMENTS NECESSARY TO ATTAIN DESIGN MINIMUM SEPARATION FOR UTILITIES CONFLICTING WITH THE CONSTRUCTION OF THE PROPOSED FORCE MAIN. INTERRUPTIONS OF ANY EXISTING UTILITY SERVICES SHALL BE NOTICED TO EFFECTED CUSTOMERS A MINIMUM OF 48 HOURS IN ADVANCE AND SHALL NOT EXCEED 4 HOURS IN DURATION.

WHERE CONCRETE REPAIRS ARE NECESSARY AND EXPANSION JOINTS ARE PRESENT, CONTRACTOR TO REMOVE AND REPLACE CONCRETE UP TO THE NEXT EXPANSION JOINT; OTHERWISE, REPLACE CONCRETE AS NECESSARY.

NOTES:

1. CONTRACTOR SHALL RESTRAIN PIPE PER RESTRAIN LENGTHS TABLE ON SHEET C-12
2. CONSTRUCTION DEWATERING SHALL BE CONDUCTED IN ACCORDANCE WITH ALL FEDERAL, STATE, AND LOCAL REQUIREMENTS INCLUDING BUT NOT LIMITED TO CHAPTERS 62-621.300 AND 62-620 OF THE FLORIDA ADMINISTRATIVE CODE (FAC)
4. EXISTING 2" GAS LINE AND BURIED ELECTRIC TO BE FIELD LOCATED WHERE NECESSARY PRIOR TO CONSTRUCTION
5. CONTRACTOR TO RESTORE ANY PIPELINE TRENCH DIGGING WITHIN 24 HOURS OF DISTURBANCE

GROUNDWATER / DEWATERING NOTE:
THE PRESENCE OF GROUNDWATER SHOULD BE ANTICIPATED ON THIS PROJECT. CONTRACTOR'S BID SHALL INCLUDE CONSIDERATION FOR THIS ISSUE. WHEN PERFORMING GRADING OPERATIONS DURING PERIODS OF WET WEATHER, PROVIDE ADEQUATE DEWATERING, DRAINAGE AND GROUND WATER MANAGEMENT TO CONTROL MOISTURE OF SOILS.

811 KNOW WHAT'S BELOW ALWAYS CALL 811 BEFORE YOU DIG
It's fast. It's free. It's the law.
www.callsunshine.com

No.	REVISIONS	DATE	BY

Kimley»Horn

© 2022 KIMLEY-HORN AND ASSOCIATES, INC.
100 2ND AVENUE SOUTH, SUITE 105-N, ST. PETERSBURG, FL 33701
PHONE: 727-547-3999
WWW.KIMLEY-HORN.COM REGISTRY NO. 35106

KHA PROJECT 148400067
DATE FEB 2022
SCALE AS SHOWN
DESIGNED BY MAS
DRAWN BY GMB
CHECKED BY SNR

Manatee County FLORIDA

BAYSHORE YACHT BASIN FORCE MAIN AND LIFT STATION REPLACEMENT
MANATEE COUNTY FL

LICENSED PROFESSIONAL
MICHAEL A. SEMAGO, P.E.
FL LICENSE NUMBER 87501
DATE:

PLAN AND PROFILE
(STA 11+00 - STA 15+31)

SHEET NUMBER
C-10

This document, together with the concepts and designs presented herein, as an instrument of service, is intended only for the specific purpose and client for which it was prepared. Reuse of and improper reliance on this document without written authorization and adaptation by Kimley-Horn and Associates, Inc. shall be without liability to Kimley-Horn and Associates, Inc.

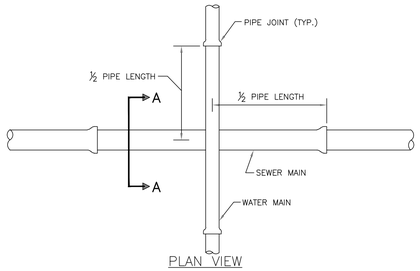

PLAN VIEW

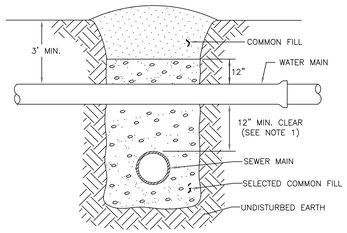

SECTION A–A

NOTES:

1. CLEARANCE MAY BE REDUCED TO 6" FOR GRAVITY SEWER WHERE WATER MAIN IS DUCTILE IRON.
2. PIPE SECTIONS SHALL BE FULL–LENGTH AND SHALL BE ADJUSTED HORIZONTALLY, SO THAT THE CROSSING IS AT EACH PIPE SECTION'S MIDPOINT REGARDLESS OF THE VERTICAL CLEARANCE.

MANATEE COUNTY PUBLIC WORKS DEPARTMENT			
REV.BY / DATE	February 25, 2020 DATE OF APPROVAL	TYPICAL NEW WATER & SEWER LINE CROSSING	UG–2

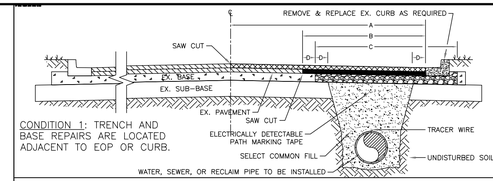

CONDITION 1: TRENCH AND BASE REPAIRS ARE LOCATED ADJACENT TO EOP OR CURB.

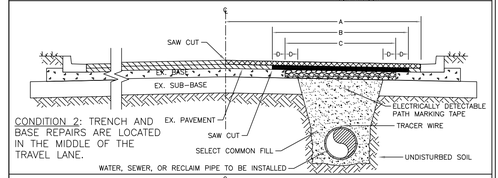

CONDITION 2: TRENCH AND BASE REPAIRS ARE LOCATED IN THE MIDDLE OF THE TRAVEL LANE.

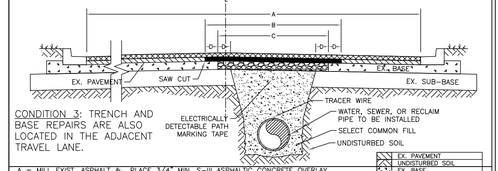

CONDITION 3: TRENCH AND BASE REPAIRS ARE ALSO LOCATED IN THE ADJACENT TRAVEL LANE.

A = MILL EXIST. ASPHALT & PLACE 3/4" MIN. S–III ASPHALTIC CONCRETE OVERLAY.
B = 1–1/4" MIN. S–I ASPHALTIC CONCRETE W/ PRIME COAT.
C = FULL BASE REPLACEMENT.
D = 9 INCHES

	EX. PAVEMENT
	UNDISTURBED SOIL
	EX. BASE
	SELECT COMMON FILL
	BASE REPLACEMENT
	S–I
	S–III
	NEW CURB

NOTE:

1. THIS DETAIL IS BASED ON A TWO–LANE ROADWAY AND SHALL BE FOLLOWED WHEN A PIPE IS INSTALLED WITHIN THE LIMITS OF A ROADWAY AND RUNS PARALLEL WITH THE EDGE OF PAVEMENT. THIS DETAIL CAN ALSO BE UTILIZED FOR RESTORATION NEEDS OF ROADWAYS WITH ADDITIONAL LANES. CONDITION 3 ONLY EXTENDS TO NEXT ADJACENT LANE ON MULTI–LANE ROADS.
2. THE MILL AND OVERLAY SHALL BE FIELD ADJUSTED TO MEET THE NEEDS FOR PAVEMENT RESTORATION DUE TO CONSTRUCTION ACTIVITIES AND SHALL BE COORDINATED WITH THE COUNTY.
3. SEE TRENCH WITH ASPHALT PAVEMENT TYPE A–1 PIPE BEDDING (CROSSING) DETAIL FOR NOTES 1 TO 12 THAT ARE ALSO APPLICABLE TO ASPHALT PAVEMENT RESTORATION.

MANATEE COUNTY PUBLIC WORKS DEPARTMENT			
REV.BY / DATE	February 25, 2020 DATE OF APPROVAL	TRENCH WITH ASPHALT PAVEMENT SURFACE TYPE A–1 PIPE BEDDING (LONGITUDINAL)	UG–12B

NOTES:

1. USE OF TYPE A–2 AND A–3 PIPE BEDDING TO BE DETERMINED IN THE FIELD BY THE ENGINEER.
2. PROVIDE ADEQUATE CLEARANCE TO PLACE AND COMPACT STAGE 1 BEDDING MATERIAL IN TRENCH AREA BELOW PIPE SPRINGLINE. PIPE EMBEDMENT MUST BE COMPACTED OUT TO THE TRENCH WALL OR 2.5 TIMES THE PIPE OD, WHICHEVER IS LESS.
3. PIPE INSTALLATION SHALL BE IN ACCORDANCE WITH THE MANUFACTURER'S WRITTEN INSTRUCTIONS.
4. TRACER WIRE NOT REQUIRED FOR GRAVITY SEWERS.

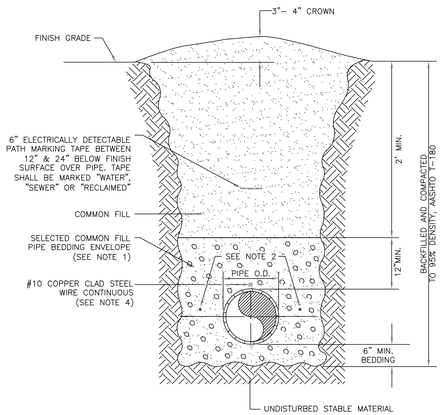

MANATEE COUNTY PUBLIC WORKS DEPARTMENT			
REV.BY / DATE	February 25, 2020 DATE OF APPROVAL	TRENCH WITH UNIMPROVED SURFACE TYPE A–1 PIPE BEDDING	UG–11

NOTES:

1. BITUMINOUS PAVEMENT SHALL BE REMOVED IN CLEAN STRAIGHT LINES BY SAW CUTTING. WHERE BITUMINOUS PAVEMENT ADJOINS A TRENCH, THE EDGES ADJACENT TO THE TRENCH SHALL BE TRIMMED TO A NEAT STRAIGHT LINES BEFORE RESURFACING TO ENSURE THAT ALL AREAS TO BE RESURFACED ARE ACCESSIBLE TO ROLLERS OR TAMPERS USED TO COMPACT THE SUB–GRADE OR PAVING MATERIALS.
2. USE OF TYPE A–2 AND A–3 PIPE BEDDING TO BE DETERMINED IN THE FIELD BY THE ENGINEER.
3. PROVIDE ADEQUATE CLEARANCE TO PLACE AND COMPACT STAGE 1 BEDDING MATERIAL IN TRENCH AREA BELOW PIPE SPRINGLINE. PIPE EMBEDMENT MUST BE COMPACTED OUT TO THE TRENCH WALL OR 2.5 TIMES THE PIPE OD, WHICHEVER IS LESS.
4. PIPE INSTALLATION SHALL BE IN ACCORDANCE WITH THE MANUFACTURER'S WRITTEN INSTRUCTIONS.
5. ASPHALTIC CONCRETE STRUCTURE COURSE WITH PRIME COAT SHALL BE THE SAME DEPTH AND TYPE AS EXISTING OR A MINIMUM OF 1–1/4 INCH S–I, WHICHEVER IS GREATER.
6. MILL 25' BACK FROM TRENCH CROSSING SAW CUTS. ADJUST MILLING PER INDIVIDUAL SITE TO NOT IMPACT BASE. BUTT JOINT TO EXIST ASPHALT. FINAL OVERLAY TO MATCH EXISTING WITH NO DISCERNABLE "BUMP" AT JOINT. MILLING LIMITS THAT IMPACT INTERSECTION SHALL BE ADDRESSED ON A CASE BY CASE BASIS AND APPROVED BY MANATEE COUNTY.
7. SHEETING ORDERED LEFT IN PLACE TO BE CUT OFF 24" BELOW FINISHED GRADE OR 12" BELOW SUBGRADE.
8. NEW BASE SHALL MATCH EXISTING; OR BE CRUSHED CONCRETE, 8" MIN. THICKNESS, LBR ≥150, WHICHEVER IS GREATER.
9. TEMPORARY PATCHES WILL BE INSTALLED TO PROVIDE A SMOOTH ALL WEATHER SURFACE AT ALL TIMES. PERMANENT REPLACEMENT TO BE MADE AS SOON AS POSSIBLE.
10. RESTORE SIGNAGE & MARKING WITH THERMOPLASTIC PER FDOT STANDARDS, LATEST EDITION.
11. TRACER WIRE NOT REQUIRED FOR GRAVITY SEWERS.
12. NOTES 5. THRU 10. ARE MINIMUM REQUIREMENTS FOR A TRENCH IN A LOCAL ROAD. REFER TO LATEST EDITION OF MANATEE COUNTY HIGHWAY AND TRAFFIC STANDARDS FOR ADDITIONAL REQUIREMENTS.

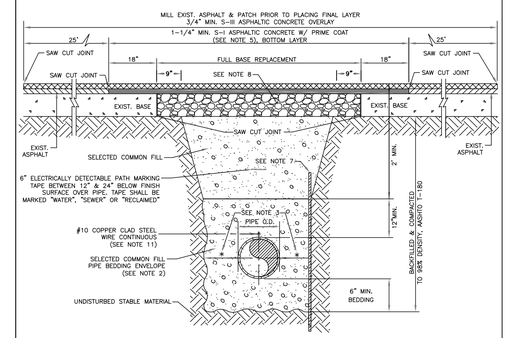

MANATEE COUNTY PUBLIC WORKS DEPARTMENT			
REV.BY / DATE	February 25, 2020 DATE OF APPROVAL	TRENCH WITH ASPHALT PAVEMENT SURFACE TYPE A–1 PIPE BEDDING (CROSSING)	UG–12

GENERAL NOTES

1. SIDEWALK SHALL BE CONSTRUCTED A MINIMUM OF 4" THICK, USING 3000 psi CONCRETE. WHERE SIDEWALK BISECTS A DRIVEWAY, THE MINIMUM SHALL BE 6" OF CLASS I CONCRETE REINFORCED WITH 6"x6" #10 WIRE MESH.
   * SEE SHEETS #101.2 & 101.3.
2. ALL SIDEWALKS SHALL BE CONSTRUCTED TO THE SPECIFICATIONS OF THE MANATEE COUNTY LAND DEVELOPMENT CODE, SECTION 722. A MINIMUM (5) FOOT WIDE SIDEWALK SHALL BE INSTALLED ALONG THE NORTH AND WEST SIDES OF ALL NEW LOCAL STREETS WHICH ARE CONSTRUCTED IN CONJUNCTION WITH A NEW RESIDENTIAL DEVELOPMENT. A SIDEWALK A MINIMUM OF (5) FEET IN WIDTH SHALL BE INSTALLED ON BOTH SIDES OF ALL THOROUGHFARES. REFER TO F.D.O.T. ROADWAY AND TRAFFIC STANDARDS, LATEST REVISION FOR CURB CUT RAMP SPECIFICATIONS.
3. THE CONCRETE SHALL BE GIVEN A BROOM FINISH. THE SURFACE VARIATIONS SHALL NOT BE MORE THAN 1/4" UNDER A TEN FOOT STRAIGHTEDGE, NOR MORE THAN 1/8" ON A FIVE–FOOT TRAVERSE SECTION. THE EDGE OF THE SIDEWALK SHALL BE CAREFULLY FINISHED WITH AN EDGING TOOL HAVING A RADIUS OF 1/2".
4. EXPANSION JOINT: EXPANSION JOINTS BETWEEN THE SIDEWALKS AND THE CURB OR DRIVEWAY OR AT FIXED OBJECTS AND SIDEWALK INTERSECTIONS SHALL BE 1/2" MATERIAL SHALL MEET THE REQUIREMENTS OF AASHTO M153 OR AASHTO M213. FOR LONG POORS, AN EXPANSION JOINT SHALL BE PLACED AT INTERVALS NOT TO EXCEED 120'.
5. CONTRACTION JOINTS:

   OPEN TYPE JOINTS
   OPEN TYPE CONSTRACTION JOINTS SHALL BE FORMED BY STAKING A METAL BULKHEAD IN PLACE AND DEPOSITING THE CONCRETE ON BOTH SIDES. AFTER THE CONCRETE HAS SET SUFFICIENTLY TO PRESERVE THE WIDTH AND THE SHAPE OF THE JOINT, THE BULKHEAD SHALL BE REMOVED. AFTER THE SIDEWALK HAS BEEN FINISHED OVER THE JOINT, THE SLOT SHALL BE FINISHED WITH A TOOL HAVING A 1/2" RADIUS.

   SAWED JOINTS
   A SLOT APPROXIMATELY 3/16" WIDE AND NOT LESS THAN 1" DEEP AT 10' CENTERS SHALL BE CUT WITH A CONCRETE SAW AFTER THE CONCRETE HAS SET.
6. SIDEWALKS ALONG OTHER STREETS SHALL BE CONSTRUCTED AND DEDICATED AS REQUIRED BY THE APPROVING AUTHORITY WHEN NECESSARY TO CONTINUE AN EXISTING OR PROPOSED SIDEWALK.
7. HANDICAP RAMPS SHALL MEET FLORIDA ACCESSIBILITIES STANDARDS, AND SECTIONS 301.0, 301.1 AND 301.2.
8. ALL SIDEWALKS ON R/W WITHIN 10' OF AN EXISTING OR PROPOSED TREE THAT WILL EXCEED 6" IN DIAMETER AT MATURITY SHALL BE 5" THICK AND CONTAIN 2–#3 REBAR CENTERED VERTICALLY AND SPACED 3' ON CENTER. PALMS ARE NOT CONSIDERED TREES.

*NOTE: FOR COMPLETE SIDEWALK DETAILS, SEE F.D.O.T. DESIGN STANDARDS, 2006 EDITION, INDEX 304, SHEETS 1 THROUGH 6 AND INDEX 310, SHEETS 1 & 2.

MANATEE COUNTY TRANSPORTATION DEPARTMENT			
REV.BY / DATE	6/12/07 DATE OF B.O.C.C. APPROVAL	SIDEWALKS GENERAL NOTES	301.0

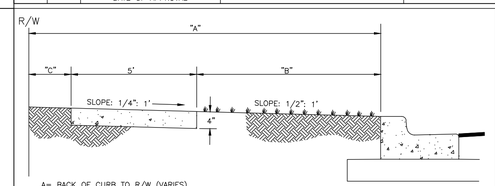

A= BACK OF CURB TO R/W (VARIES)
B= UNPAVED AREA (VARIES). REFER TO F.D.O.T. GREEN BOOK, TABLE 3–12, LATEST REVISION.
C= VARIES, SEE 401 SERIES

TYPICAL SIDEWALK LOCATION

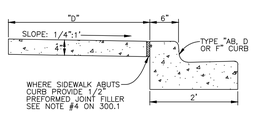

D= SIDEWALK WIDTH SHALL BE 6' STANDARD, WHERE WALK ABUTS TYPE "AB, D OR F" CURB. WHERE SPEED LIMIT IS 25 MPH OR LESS, WIDTH CAN BE 5'–6'.

* SEE SHEET 300.1 "GENERAL NOTES" FOR FURTHER INFORMATION

ALTERNATE SIDEWALK LOCATION

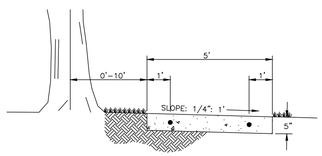

SIDEWALK LOCATION CLOSE TO TREES

MANATEE COUNTY TRANSPORTATION DEPARTMENT			
REV.BY / DATE	6/12/07 DATE OF B.O.C.C. APPROVAL	SIDEWALK REQUIREMENTS	301.1

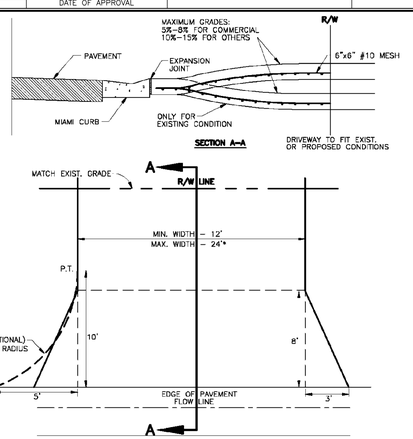

* For driveways that can demonstrate the need for additional width, the width may not be greater than the LESSER of:
  a.) 30' total at the R/W line
  b.) 30% of the front footage as defined on the survey (or field measurement, 36' max.)

(A) CONSTRUCT WITH 6" REINFORCED CONCRETE 3000 PSI @ 28 DAYS, 6"x6" #10 WIRE MESH FROM BACK OF CURB– TO R/W LINE.
(B) DRIVEWAYS ADJACENT TO A PAVED ROADWAY MUST HAVE THE APRON CONSTRUCTED IN COMPLIANCE WITH THE NOTE (A) ON PREVIOUS PAGE (STD. 101.0)
(C) MAINTAIN EXISTING DRAINAGE FLOWLINE. FOR PIPING SPECIFICATIONS, REFER TO F.D.O.T. STANDARD SPECIFICATIONS SECTION 430. SEE NOTE 4, PAGE 100.1. SEE SECTION 200– DRAINAGE (STD. 200.0, 202.5).
(D) 3'x8" FLARE OR 18" RADIUS WITH CURB TRANSITION (TRANSITION FROM TYPE "F" CURB TO MIAMI CURB) SEE STD. 102.2 NO CHANGE WITH 3' VALLEY CROSSINGS – SEE STDS. 201.0, 201.1, 201.2, 201.4, 201.5, 201.6.
(E) EXPANSION JOINT 0.50" PREFORMED JOINT FILLER OR APPROVED ALTERNATE, DRIVES WIDER THAN 12' (BEYOND FLARE) PLACE JOINT ON 10' CENTER.
(F) LATERAL ALIGNMENT 45 DEGREES FOR DOUBLE DRIVE PER LOT, 90 DEGREES FOR SINGLE DRIVE, OFF CENTER LINE.

MANATEE COUNTY TRANSPORTATION DEPARTMENT			
REV.BY / DATE	6/12/07 DATE OF B.O.C.C. APPROVAL	URBAN DRIVES	101.1

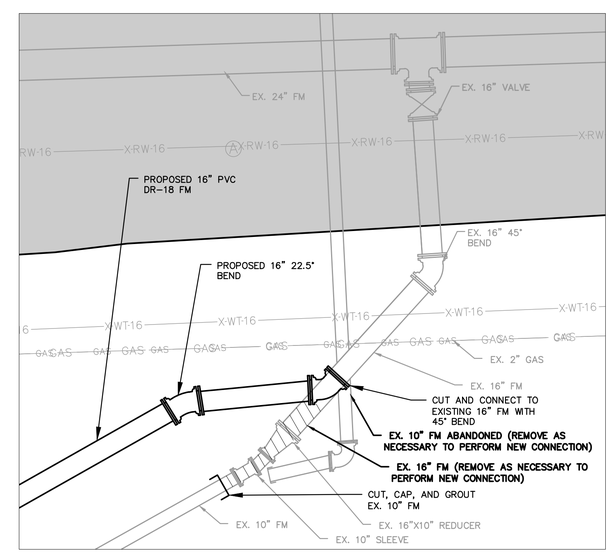

PROPOSED 16" FORCE MAIN CONNECTION DETAIL (1 / C–7)

No.	REVISIONS	DATE	BY

Kimley»Horn

© 2022 KIMLEY–HORN AND ASSOCIATES, INC.
100 2ND AVENUE SOUTH, SUITE 105–N, ST. PETERSBURG, FL 33701
PHONE: 727–547–3999
WWW.KIMLEY–HORN.COM REGISTRY NO. 35106

KHA PROJECT 148400067
DATE FEB 2022
SCALE AS SHOWN
DESIGNED BY MAS
DRAWN BY GMB
CHECKED BY SNR

Manatee County FLORIDA

BAYSHORE YACHT BASIN FORCE MAIN AND LIFT STATION REPLACEMENT

MANATEE COUNTY FL

LICENSED PROFESSIONAL
MICHAEL A. SEMAGO, P.E.
FL LICENSE NUMBER 87501
DATE:

CIVIL DETAILS

SHEET NUMBER C–11

This document, together with the concepts and designs presented herein, as an instrument of service, is intended only for the specific purpose and client for which it was prepared. Reuse of and improper reliance on this document without written authorization and adaptation by Kimley–Horn and Associates, Inc. shall be without liability to Kimley–Horn and Associates, Inc.

THRUST BLOCK DIMENSIONS B ft. x d inches														
PIPE SIZE	90°BEND		45°BEND		22.5°BEND		11.25°BEND		DEAD END & TEE		45° WYE			
(IN.)	B	d	B	d	B	d	B	d	B	d	B	d		
4	1.5	3 ½	1.1	3 ½	0.8	3 ½	0.6	3 ½	1.3	3 ½	1.1	3 ½		
6	2.2	5 ¼	1.6	3 ¾	1.2	3 ½	0.8	3 ½	1.9	4 ½	1.6	3 ¾		
8	2.9	7	2.1	5	1.5	3 ½	1.1	3 ½	2.4	5 ¾	2.0	4 ¾		
10	3.5	8 ½	2.6	6 ¼	1.9	4 ½	1.3	3 ½	3.0	7 ¼	2.5	6		
12	4.2	10	3.1	7 ½	2.2	5 ¼	1.6	3 ¾	3.5	8 ¼	3.0	7 ¼		
14	4.9	11 ¾	3.6	8 ¾	2.6	6 ¼	1.8	4 ¼	4.1	9 ¾	3.4	8 ¼		
16	5.5	13 ¼	4.1	9 ¾	2.9	7	2.1	5	4.7	11 ¼	3.9	9 ¼		
18	6.2	15	4.6	11	3.3	8	2.3	5 ½	5.2	12 ½	4.4	10 ½		
20	6.9	16 ½	5.0	12	3.6	8 ¾	2.6	6 ¼	5.8	14	4.9	11 ¾		
24	8.2	19 ¾	6.0	14 ½	4.3	10 ¼	3.1	7 ½	6.9	16 ½	5.8	14		
30	10.1	24 ¼	7.5	18	5.3	12 ¾	3.8	9	8.5	20 ½	7.2	17 ¼		
36	12.1	29	8.9	21 ¼	6.4	15 ¼	4.5	10 ¾	10.2	24 ½	8.6	20 ¾		

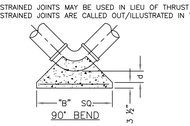

REINFORCEMENT MAT SCHEDULE

FOR DIM. "B" BETWEEN 5.75' & 12.5' USE #4 @ 8" EACH WAY

FOR DIM. "B" LESS THAN 5.75' USE #3 @ 8" EACH WAY

NOTES:

1. ALL THRUST BLOCKS SHALL BE CAST IN PLACE. FITTINGS ADJACENT TO THRUST BLOCKS SHALL BE WRAPPED IN POLYETHYLENE.
2. THIS TABLE IS BASED ON WATER PRESSURE=180 PSI WITH AN ALLOWABLE SOIL BEARING PRESSURE=2000 PSF, CONCRETE STRENGTH f_c =3000 PSI, REINFORCEMENT f_y =60.0 KSI. THRUST BLOCK SHALL BE CAST AGAINST FIRM UNDISTURBED SOIL.
3. FOR LARGER "B" DIMENSIONS IT IS NECESSARY TO CHECK THAT PIPE IS SUFFICIENTLY DEEP TO ALLOW 15" MIN. SOIL COVER OVER TOP EDGE OF THRUST BLOCK.
4. RESTRAINED JOINTS MAY BE USED IN LIEU OF THRUST BLOCKS TO SAVE SPACE. HOWEVER, WHERE THRUST BLOCKS AND RESTRAINED JOINTS ARE CALLED OUT/ILLUSTRATED IN THE DETAILS, BOTH SHALL BE INSTALLED.

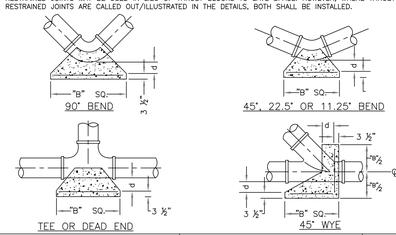

MANATEE COUNTY PUBLIC WORKS DEPARTMENT				
REV.BY	DATE	February 25, 2020 DATE OF APPROVAL	CONCRETE THRUST BLOCKS	UG-7

REQUIRED LENGTH OF RESTRAINED JOINT PIPE FOR C900-16 PVC PIPE (DR-18)

MAIN PIPE SIZE	HORIZ. BENDS			TEES						REDUCERS			PLUGS & VALVES
	90°	45°	22.5°	SIZE / LENGTH						SIZE / LENGTH			
24	90	38	18	X24 / 169	X20 / 132	X16 / 90	X12 / 38	X10 / 6		X20 / 64	X16 / 117	X12 / 158	214
20	78	32	16	X20 / 79	X16 / 101	X12 / 53	X10 / 24	X8 / 1		X16 / 65	X12 / 115	X10 / 149	184
16	66	27	13	X16 / 111	X12 / 67	X10 / 41	X8 / 12			X12 / 64	X10 / 107	X8 / 111	151
12	52	22	10	X12 / 60	X10 / 36	X8 / 31	X6 / 1			X10 / 58	X8 / 62	X6 / 86	118
10	44	18	9	X10 / 63	X8 / 40	X6 / 7				X8 / 33	X6 / 61	X4 / 81	100
8	37	15	7	X8 / 49	X6 / 18	X4 /				X6 / 35	X4 / 60		83
6	29	12	6	X6 / 29	X4 / 1					X4 / 33			63
4	21	8	4	X4 / 12									45

NOTES:

1. RESTRAIN 11.25° BENDS 50% OF LENGTH FOR 22.5° BENDS.
2. ALL VALVES AND FITTINGS SHALL BE RESTRAINED TO THE CONNECTING SECTIONS OF PIPE.
3. ALL ISOLATION VALVES MUST BE PROPERLY ANCHORED OR RESTRAINED TO RESIST A 180 PSI TEST PRESSURE IN EITHER DIRECTION.
4. PIPE SIZES ARE GIVEN IN INCHES.
5. RESTRAINED PIPE LENGTHS ARE GIVEN IN FEET.
6. LENGTHS SHOWN ARE FOR A TEST PRESSURE OF 180 PSI.
7. THE RESTRAINED LENGTHS SHOWN IN THESE TABLES ARE BASED ON SOIL CLASSIFICATION SP WITH AWWA TYPE 3 TRENCH CONDITIONS, 180 PSI TEST PRESSURE, 3 FEET OF COVER AND 1.5 FACTOR OF SAFETY. ACTUAL BURY CONDITIONS MUST BE DETERMINED BY THE ENGINEER OF RECORD AND THE RESTRAINED LENGTHS MODIFIED ACCORDINGLY.
8. RESTRAINED LENGTHS TO BE APPLIED TO PIPELINES PER DETAIL UG-10 RESTRAINED LENGTHS FOR PIPE.
9. ALL RESTRAINED JOINT HARDWARE SHALL CONFORM TO 1.11.17 OF THE PUBLIC WORKS UTILITIES STANDARDS MANUAL.
10. ALL THREE "LEGS" OF TEES SHALL BE RESTRAINED PER THE STATED LENGTH IN THE TABLE.

MANATEE COUNTY PUBLIC WORKS DEPARTMENT				
REV.BY	DATE	February 25, 2020 DATE OF APPROVAL	RESTRAINED LENGTHS FOR PVC PIPE	UG-8

EXTRA REQUIRED LENGTHS OF RESTRAINED JOINT PIPE FOR C900-16 PVC PIPE (DR-18)

(SOURCES: EBAA IRON RESTRAINT LENGTH CALCULATION PROGRAM FOR PVC PIPE, RELEASE 7.1.2)

FITTING TYPE		PIPE SIZE 4"	6"	8"	10"	12"	16"	18"	20"	24"	200 PSI 30"	36"
90° HORIZ. BEND		–	–	–	–	–	–	–	–	–	119	136
45° HORIZ. BEND		–	–	–	–	–	–	–	–	–	49	56
22.5° HORIZ. BEND		–	–	–	–	–	–	–	–	–	24	27
11.25° HORIZ. BEND		–	–	–	–	–	–	–	–	–	12	14
90° VERT.* OFFSET	UPPER BEND	38	53	70	84	99	115	140	153	179	285	330
	LOWER BEND	38	53	70	84	99	115	140	153	179	285	330
45° VERT. OFFSET	UPPER BEND	16	22	29	35	41	53	58	64	74	118	137
	LOWER BEND	4	6	7	9	10	13	14	15	18	29	33
22.5° VERT. OFFSET	UPPER BEND	8	11	14	17	20	26	28	31	36	57	66
	LOWER BEND	2	3	4	4	5	6	7	8	9	14	16
11.25° VERT. OFFSET	UPPER BEND	4	6	7	9	10	13	14	16	18	29	33
	LOWER BEND	1	1	1	2	3	3	4	4	5	7	8
PLUG/ IN-LINE VALVE		–	–	–	–	–	–	–	–	–	285	330
TEE (BRANCH RESTRAINT)	4"X ø	–	–	–	–	–	–	–	–	–	–	–
	6"X ø	–	–	–	–	–	–	–	–	–	–	–
	8"X ø	–	–	–	–	–	–	–	–	–	–	–
	10"X ø	–	–	–	–	–	–	–	–	–	–	–
	12"X ø	–	–	–	–	–	–	–	–	–	–	–
	16"X ø	–	–	–	–	–	–	–	–	–	–	–
	18"X ø	1	1	24	47	68	104	120	–	–	–	–
	20"X ø	–	–	–	–	–	–	–	–	–	–	–
	24"X ø	–	–	–	–	–	–	–	–	–	–	–
	30"X ø	1	1	1	15	42	84	103	120	152	193	–
	36"X ø	1	1	1	1	26	73	93	111	144	187	226
REDUCER (LARGER PIPE RESTRAINT)	6"X ø	28	–	–	–	–	–	–	–	–	–	–
	8"X ø	50	30	–	–	–	–	–	–	–	–	–
	10"X ø	68	52	28	–	–	–	–	–	–	–	–
	12"X ø	86	–	–	–	–	–	–	–	–	–	–
	16"X ø	117	107	–	–	–	–	–	–	–	–	–
	18"X ø	131	122	110	95	76	29	–	–	–	–	–
	20"X ø	146	138	–	–	–	–	29	–	–	–	–
	24"X ø	173	166	157	146	132	–	–	–	–	–	–
200 PSI	30"X ø	279	272	262	251	237	201	179	155	100	–	–
	36"X ø	325	320	312	303	291	262	245	225	181	100	–

NOTES:

1. CONTRACTOR TO REFER TO MANATEE COUNTY DETAIL UG-8 FOR PVC RESTRAIN LENGTHS. IF FITTING TYPE OR PIPE SIZE IS NOT SHOWN IN DETAIL UG-8, REFER TO THIS DETAIL FOR SECONDARY REFERENCE.
2. THE DATA IN THE TABLE ARE BASED UPON THE FOLLOWING INSTALLATION CONDITIONS:
   SOIL TYPE–SP TEST PRESSURE–150/200 PSI
   TRENCH TYPE–3 SAFETY FACTOR– 1.5
   MINIMUM PIPE LENGTH ALONG TEE RUN–5'
   DEPTH OF BURY–3' VERTICAL OFFSET–3'
3. THE RESTRAINED PIPE LENGTHS APPLY TO PVC PIPE.
4. ALL JOINTS BETWEEN UPPER AND LOWER BENDS SHALL BE RESTRAINED.
5. RESTRAINED PIPE LENGTHS APPLY TO PIPE ON BOTH SIDES OF FITTINGS.
6. RESTRAINED JOINTS SHALL EXTEND ONE JOINT BEYOND MIN. LENGTH REQUIRED.

*PER DIPRA, AS THE BEND ANGLE APPROACHES 90°, LATERAL MOVEMENT OF THE OUTER LEGS APPROACHES ZERO. FOR THIS CONDITION, RESTRAIN ALL PIPE BETWEEN THE FITTINGS AND RESTRAIN THE OUTER LEGS AS DEAD ENDS.

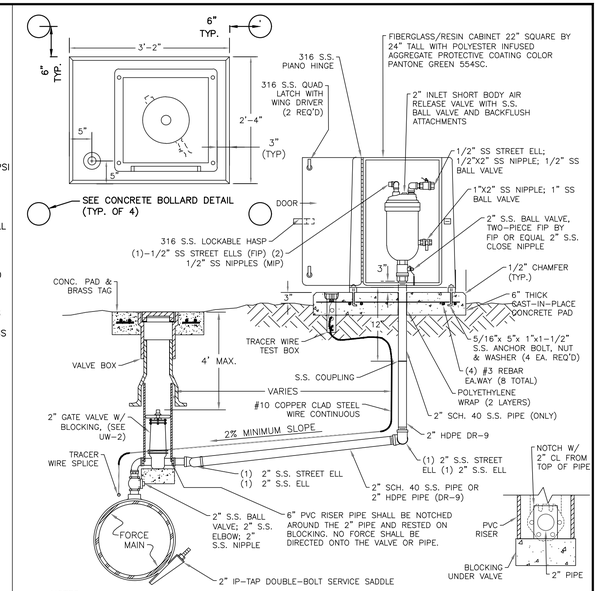

NOTES:

1. AIR RELEASE VALVES TO BE ABOVE-GROUND INSTALLATIONS, UNLESS IMPRACTICAL. INSTALLATIONS MAY BE BELOW-GROUND ONLY WHERE APPROVED AND SPECIFICALLY INDICATED ON THE PLAN.
2. AIR RELEASE VALVES TO BE INSTALLED AT HIGH POINTS, OR WHERE AIR WOULD BE ENTRAPPED, ALONG 4" AND LARGER FORCE MAINS.
3. FORCE MAIN VERTICAL ALIGNMENT TO BE DESIGNED SUCH THAT THE MINIMUM NUMBER OF REQUIRED AIR RELEASE VALVES ARE INSTALLED.
4. ALL INCIDENTAL FITTINGS AND HARDWARE TO BE 316 STAINLESS STEEL.
5. ALL PIPE THREADS TO BE SEALED AIR TIGHT.
6. VENT PIPE TO BE LAID ACCURATELY ON SLOPE, WITHOUT HIGH OR LOW POINTS.
7. CONCRETE PAD SHALL BE TYPE I CONCRETE W/ 3,000 P.S.I., 28 DAY COMPRESSIVE STRENGTH.
8. ARV SHALL BE INSTALLED MINIMUM 6 FT FROM EDGE OF PAVEMENT; 10 FT MAXIMUM FROM BACK OF CURB; 4 FT MIN. MAY BE APPROVED BY UTILITIES IN SOME EXISTING AREAS.
9. SEE **US-11 VALVE, BOX, COVER AND TAG** STANDARD DETAIL. CENTERING COLLAR IS NOT REQUIRED ON 2" GATE VALVES.

ABOVEGROUND AIR RELEASE ASSEMBLY FOR FORCE MAINS

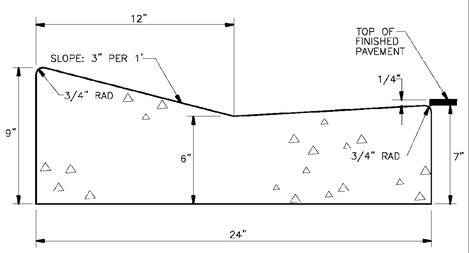

TYPE "A"
MIAMI CURB & GUTTER

A) CLASS 1 CONCRETE 3,000 P.S.I. AT 28 DAYS.

B) CURB AND GUTTER SHALL MEET THE SPECIFICATIONS ESTABLISHED BY FLORIDA D.O.T. STANDARD SPECIFICATIONS PER F.D.O.T. ROADWAY AND TRAFFIC DESIGN STANDARDS INDEX NO. 300, LATEST REVISION.

MANATEE COUNTY TRANSPORTATION DEPARTMENT				
REV.BY	DATE	6/12/07 DATE OF B.O.C.C. APPROVAL	TYPE A MIAMI CURB & GUTTER	201.1

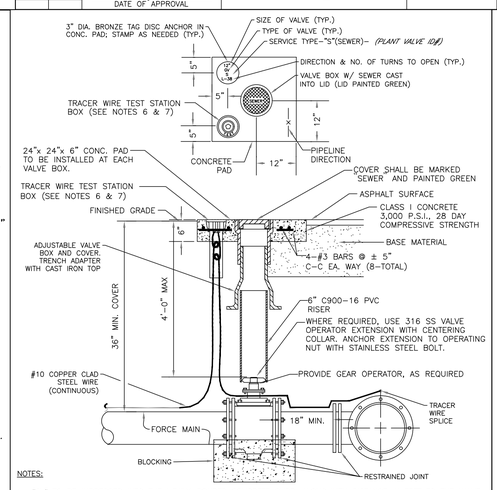

NOTES:

1. "SV" TO BE IMPRESSED INTO THE NEWLY-POURED CONCRETE CURB, ALONG WITH DISTANCE IN FEET TO THE VALVE. IF NO CURB, INSTALL A GREEN DISC WITH "SV" AND A 1/8" x 1" GALVANIZED STEEL SCREW IN THE EDGE OF PAVEMENT WITH THE FOOTAGE FROM THE DISC TO THE VALVE.
2. ALL EXISTING AND PROPOSED VALVE BOXES SHALL BE ADJUSTED TO FINISHED GRADES AS DETERMINED IN THE FIELD.
3. VALVES SHALL NOT BE PLACED IN HANDICAPPED RAMPS, CURBS OR GUTTERS.
4. PRECAST CONCRETE PADS AND THRUST BLOCKS SHALL NOT BE USED.
5. ALL EXPOSED EDGES OF CONCRETE SHALL BE CHAMFERED 1/2".
6. USE NON-TRAFFIC RATED BOXES FOR NORMAL YARD SERVICE. WHERE VALVE WILL BE IN STREET OR PARKING UNDER VEHICLE TRAFFIC, USE TRAFFIC RATED BOXES. WHERE POSSIBLE, LOCATE TRACE WIRE TESTING STATION OUTSIDE OF TRAVEL LANE OR IN MEDIAN, CENTERED IN SEPARATE CONCRETE PAD SIMILAR TO STANDARD VALVE BOX PAD.
7. TRACER WIRE BOX SHALL BE LOCATED OUTSIDE THE ROADWAY ON THOROUGHFARES, LOCAL ARTERIAL AND STATE ROADWAYS.
8. THE BRASS TAG SHALL HAVE A "PLANT VALVE ID# WHEN VALVES ARE INSTALLED WITHIN THE COUNTY TREATMENT PLANT LIMITS. THE PLANT VALVE ID# SHALL BE SHOWN ON THE CONSTRUCTION PLANS AND RECORD DRAWINGS.
9. REFER TO SECTION 1.11 IN THE PUBLIC WORKS UTILITY STANDARDS MANUAL FOR FURTHER DETAILS.

MANATEE COUNTY PUBLIC WORKS DEPARTMENT				
REV.BY	DATE	February 25, 2020 DATE OF APPROVAL	VALVE, BOX, COVER AND TAG	US-11

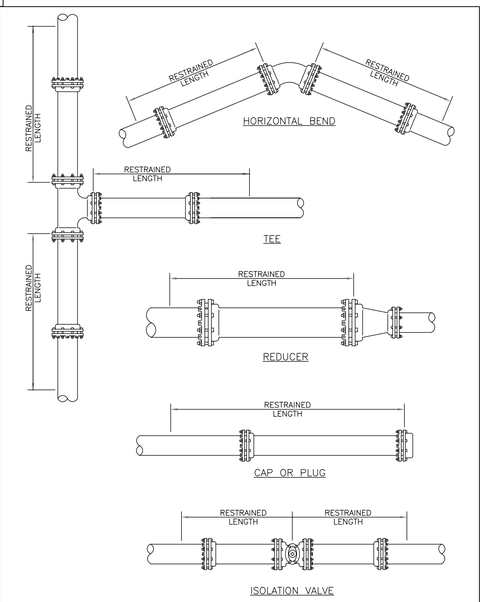

NOTE:

1. SEE DETAIL UG-8 RESTRAINED LENGTHS FOR PVC PIPE FOR NOTES 1 THROUGH 9 THAT ARE ALSO APPLICABLE TO RESTRAINED LENGTHS FOR PIPE.

MANATEE COUNTY PUBLIC WORKS DEPARTMENT				
REV.BY	DATE	February 25, 2020 DATE OF APPROVAL	RESTRAINED LENGTHS FOR PIPE	UG-10

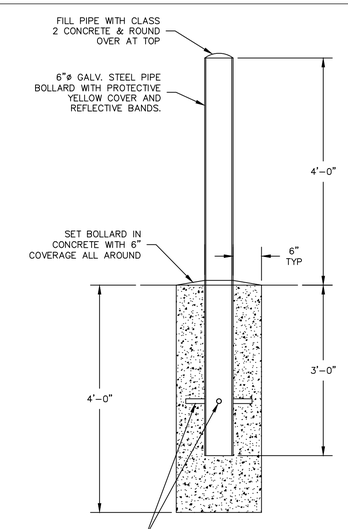

NOTES:
1. GRIND ALL EDGES SMOOTH
2. COAT IN ACCORDANCE WITH CONTRACT SPECIFICATIONS

CONCRETE FILLED BOLLARD DETAILS
N.T.S.

This document, together with the concepts and designs presented herein, as an instrument of service, is intended only for the specific purpose and client for which it was prepared. Reuse of and improper reliance on this document without written authorization and adaptation by Kimley-Horn and Associates, Inc. shall be without liability to Kimley-Horn and Associates, Inc.

No.	REVISIONS	DATE	BY

Kimley»Horn

© 2022 KIMLEY-HORN AND ASSOCIATES, INC.

100 2ND AVENUE SOUTH, SUITE 105-N, ST. PETERSBURG, FL 33701
PHONE: 727-547-3999
WWW.KIMLEY-HORN.COM REGISTRY NO. 35106

KHA PROJECT 148400067
DATE FEB 2022
SCALE AS SHOWN
DESIGNED BY MAS
DRAWN BY GMB
CHECKED BY SNR

Manatee County FLORIDA

BAYSHORE YACHT BASIN FORCE MAIN AND LIFT STATION REPLACEMENT

MANATEE COUNTY FL

LICENSED PROFESSIONAL
MICHAEL A. SEMAGO, P.E.
FL LICENSE NUMBER 87501
DATE:

CIVIL DETAILS

SHEET NUMBER
C-12

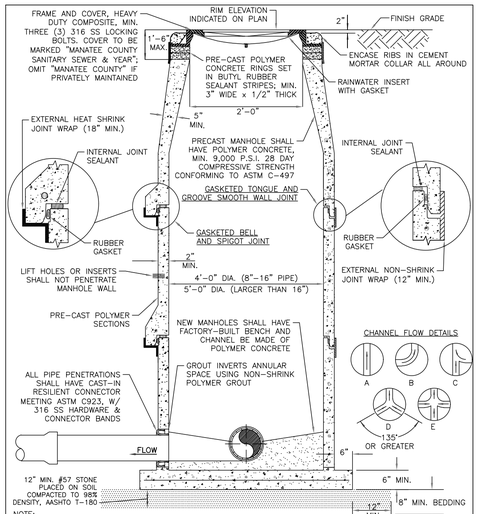

NOTE:

1. DROP MANHOLES, MANHOLES WITH OPPOSING TURBULENT FLOW (DETAILS D & E), MANHOLES UPSTREAM OF A LIFT STATION WET WELL (SEE US-17A), MANHOLES WITH GRAVITY SEWERS GREATER THAN 12 INCHES IN DIAMETER, FORCE MAIN TERMINAL MANHOLE AND THE NEXT TWO DOWNSTREAM MANHOLES SHALL BE MADE OF POLYMER CONCRETE.
2. MANHOLES SHALL HAVE A GASKETED BELL & SPIGOT OR TONGUE & GROOVE SMOOTH WALL JOINT DESIGN.
3. ALL JOINTS SHALL MEET THE REQUIREMENTS OF ASTM C-443 AND ASTM C-990 FOR CONCRETE SEWER AND CULVERT PIPE USING RUBBER GASKETS AND FLEXIBLE JOINT SEALANTS.
4. ALL FRP/STEEL REINFORCEMENT, MANHOLE RISERS, CONES, BASES, AND FLAT LIDS SHALL BE DESIGNED BY MANUFACTURER TO MEET LOADING REQUIREMENTS OF ASTM C-478, ASTM C-857, ACI 350, AND ACI 440.1R AS MODIFIED FOR POLYMER CONCRETE MANHOLES.

MANATEE COUNTY PUBLIC WORKS DEPARTMENT		STANDARD PRE-CAST POLYMER CONCRETE SANITARY SEWER MANHOLE FOR TURBULENT FLOW	US-3
REV.BY	DATE	February 25, 2020 DATE OF APPROVAL	

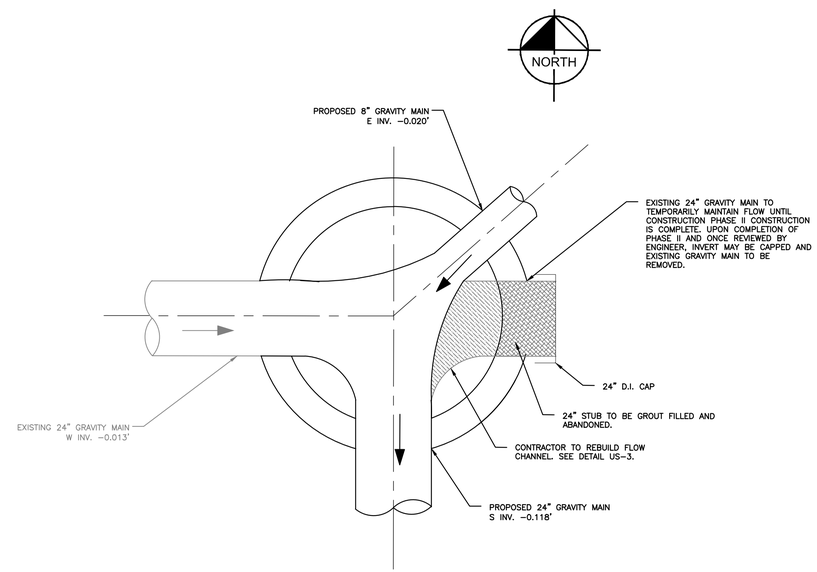

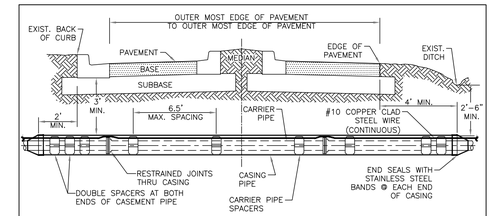

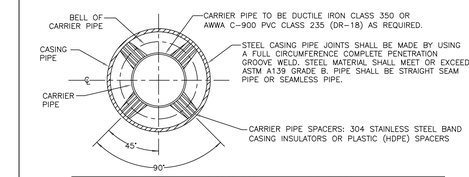

CARRIER SIZE & MINIMUM CASING SIZE									
CARRIER	4"	6"	8"	10"	12"		16"	18"	20"
CASING	12"	14"	18"	20"	24"		30"	36"	36"
CASING / WALL THICKNESS	0.188	0.188	0.250	0.250	0.344		0.406	0.406	0.406

STEEL CASING SIZES

CARRIER SIZE & MINIMUM CASING SIZE									
CARRIER	4"	6"	8"	10"	12"		16"	18"	20"
CASING	8"	12"	18"	20"	24"		30"	36"	36"

PVC/HDPE CASING SIZES

NOTES:

1. THE ENGINEER OF RECORD MAY SELECT A LARGER CASING DIAMETERS, INCREASE WALL THICKNESS, AND/OR INCREASE DEPTH OF BURY DUE TO EXTERNAL LOADS WITH COUNTY APPROVAL PRIOR TO PERFORMING THE WORK.
2. ALL PIPES CROSSINGS OF FEDERAL OR STATE ROADS; OR RAILROADS SHALL BE INSTALLED IN A CASING PIPE.
3. ALL PIPES CROSSINGS OF COUNTY LOCAL ARTERIAL AND THOROUGHFARE ROADWAYS SHALL BE IN A CASING PIPE.
4. SPLIT-STEEL CASINGS MAY BE USED ON EXISTING COUNTY MAINS ONLY.
5. FOR JACK & BORE SPECIFICATIONS UNDER STATE ROADS AND RAILROADS, REFER TO THE F.D.O.T. UTILITY ACCOMMODATION MANUAL, LATEST EDITION.
6. HDPE CASING SHALL HAVE ALL WELD BEADS REMOVED FROM THE INSIDE SURFACE SUCH THAT THE JOINT SURFACES SHALL BE SMOOTH.
7. *14-INCH DIAMETER MAINS ARE NOT TO BE INSTALLED.

MANATEE COUNTY PUBLIC WORKS DEPARTMENT		CASING CROSSING	UG-3
REV.BY	DATE	February 25, 2020 DATE OF APPROVAL	

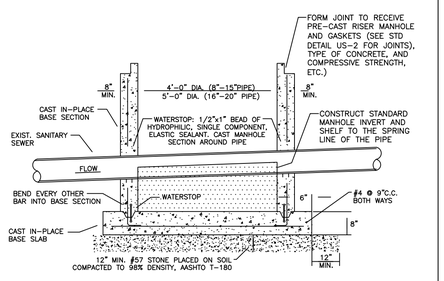

NOTES:

1. PREFERRED CONSTRUCTION IS BY "CUTTING-IN" A STANDARD SANITARY SEWER MANHOLE WITH A TEMPORARY FLOW BY-PASS SYSTEM.
2. PRIOR TO ANY EXCAVATION OVER THE PIPE, A TV RECORDING OF THE EXISTING SEWER MAIN SHALL OCCUR BETWEEN THE UPSTREAM AND DOWNSTREAM MANHOLES WHILE THE COUNTY INSPECTOR IS PRESENT.
3. THE CONTRACTOR SHALL CAREFULLY EXCAVATE AROUND AND PROPERLY SUPPORT THE EXISTING PIPE.
4. SEWER LINES GREATER THAN 20" REQUIRE SPECIAL DESIGN AND APPROVAL BY MANATEE COUNTY UTILITIES ENGINEERING.
5. ALLOW SUFFICIENT CURING TIME, 24-36 HOURS, FOR THE HYDROPHILIC, SINGLE COMPONENT, ELASTIC SEALANT, BEFORE POURING CONCRETE.
6. FOLLOWING SATISFACTORY CURING OF THE INVERT CHANNEL AND SHELF, THE CONTRACTOR SHALL CUT AND REMOVE THE TOP HALF OF THE EXISTING PIPE WITHIN THE MANHOLE, TAKING CARE NOT TO ALLOW ANY PIECES TO BE WASHED DOWN STREAM IN THE PIPE. CUTTING OF THE PIPE SHALL BE IN A WORKMAN LIKE MANNER, PROVIDING A SMOOTH AND EVEN FINISHED PRODUCT.
7. A TV RECORDING OF THE SEWER MAIN SHALL ALSO OCCUR AFTER CONSTRUCTION WHILE THE COUNTY INSPECTOR IS PRESENT. PIPE DEFLECTION SHALL NOT DEVIATE BY MORE THAN 1 INCH FROM THE DESIGN LINE.
8. THERE SHALL BE NO VISIBLE LEAKS IN THE MANHOLE.

PUBLIC WORKS DEPARTMENT		SANITARY SEWER MANHOLE CONSTRUCTED OVER EXISTING SEWER LINE	US-5
REV.BY	DATE	DATE OF APPROVAL	

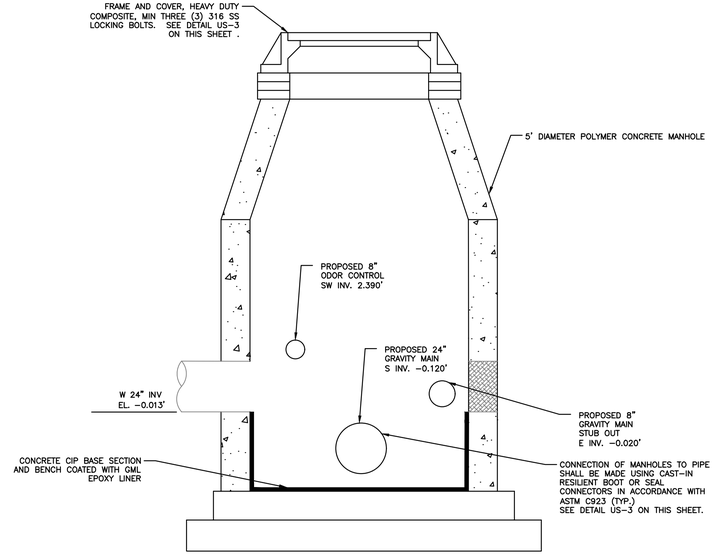

PROPOSED CUT IN MANHOLE DETAIL (1 / C-10)

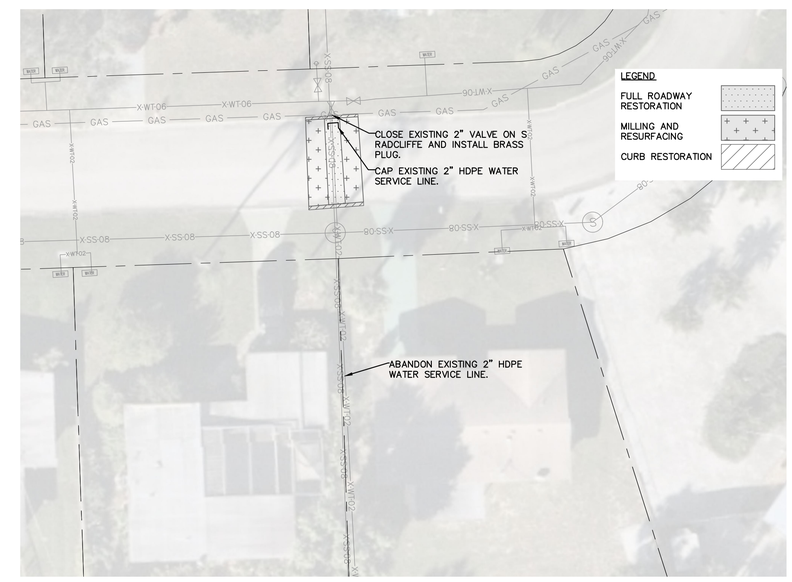

ABANDONED 2" HDPE WATER SERVICE DETAIL (1 / C-10)

No.	REVISIONS	DATE	BY

Kimley»Horn

© 2022 KIMLEY-HORN AND ASSOCIATES, INC.

100 2ND AVENUE SOUTH, SUITE 105-N, ST. PETERSBURG, FL 33701
PHONE: 727-547-3999
WWW.KIMLEY-HORN.COM REGISTRY NO. 35106

KHA PROJECT 148400067
DATE FEB 2022
SCALE AS SHOWN
DESIGNED BY MAS
DRAWN BY GMB
CHECKED BY SNR

Manatee County FLORIDA

BAYSHORE YACHT BASIN FORCE MAIN AND LIFT STATION REPLACEMENT

MANATEE COUNTY FL

LICENSED PROFESSIONAL
MICHAEL A. SEMAGO, P.E.
FL LICENSE NUMBER 87501
DATE:

CIVIL DETAILS

SHEET NUMBER C-13

This document, together with the concepts and designs presented herein, as an instrument of service, is intended only for the specific purpose and client for which it was prepared. Reuse of and improper reliance on this document without written authorization and adaptation by Kimley-Horn and Associates, Inc. shall be without liability to Kimley-Horn and Associates, Inc.

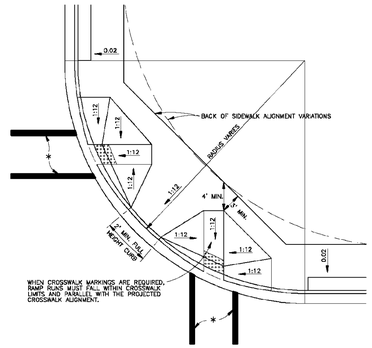

* CROSSWALK WIDTHS AND CONFIGURATION VARY, MUST CONFORM TO FDOT INDEX NO. 17344 AND 17346.

1) CURB CUT RAMPS ARE TO BE LOCATED AS SHOWN ON PLANS.

2) SEE SHEETS # 300.1 "GENERAL NOTES" & # 301.2 "HANDICAPPED RAMP" SHT 2 FOR FURTHER REQUIREMENTS.

3) RADIUS OF CURB VARIES AS FOLLOWS:

A) 25' RAD. LOCAL STREET WITH ALLEY.
B) 25' RAD. LOCAL STREET WITH LOCAL STREET.
C) 35' RAD. LOCAL STREET WITH THOROUGHFARE OR COLLECTOR.
D) 50' RAD. THOROUGHFARE WITH THOROUGHFARE

4) CURB RADIUS SHOULD BE A MINIMUM OF 50' WHERE INDUSTRIAL AND BUS TRAFFIC (5% OR MORE) IS ANTICIPATED ON LOWER CLASSIFICATION ROADWAYS.

5) BOTH LOCATION OPTIONS FOR HANDICAPPED RAMP ARE SHOWN. ENGINEER MAY SELECT EITHER, WHICHEVER FITS THE SITUATION.

NOTE: FOR COMPLETE HANDICAP, PUBLIC SIDEWALK AND CURB RAMP DETAILS, SEE F.D.O.T. DESIGN STANDARDS, 2006 EDITION, INDEX 304, SHEETS 1 THROUGH 6.

MANATEE COUNTY TRANSPORTATION DEPARTMENT			
REV.BY	DATE	6/12/07 DATE OF B.O.C.C. APPROVAL	HANDICAPPED RAMP SHEET 1	302.1

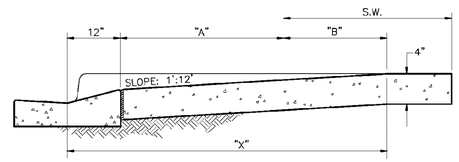

SECTION A–A
(SEE SHEET 301.0)

S.W.= SIDEWALK	"A"	S.W.+ A + 10"	"X"	"B"
5'	0	5.8'	5.8'	5'
6'	0	6.8'	6.8'	6'
7'	0	7.8'	7.3'	6.5'
8'	0	8.8'	7.3'	6.5'
5'	2'	7.8'	7.8'	5'
5'	2.5'	8.3'	8.1'	4.8'
5'	3'	8.8'	8.2'	4.4'
5'	3.5'	9.3'	8.4'	4.1'
5'	4'	9.8'	8.6'	3.8'
5'	4.5'	10.3'	8.7'	3.4'
5'	5'	10.8'	9.1'	3.1'

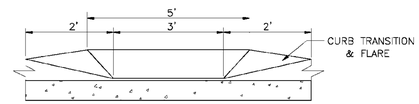

SECTION B–B
(SEE SHEET 301.0)

NOTE: FOR COMPLETE HANDICAP, PUBLIC SIDEWALK AND CURB RAMP DETAILS, SEE F.D.O.T. DESIGN STANDARDS, 2006 EDITION, INDEX 304, SHEETS 1 THROUGH 6.

MANATEE COUNTY TRANSPORTATION DEPARTMENT			
REV.BY	DATE	6/12/07 DATE OF B.O.C.C. APPROVAL	HANDICAPPED RAMP SHEET 2	302.2

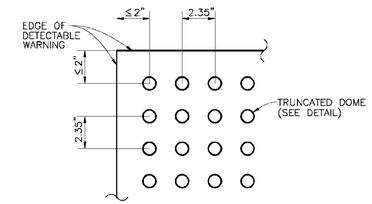

PLAN VIEW

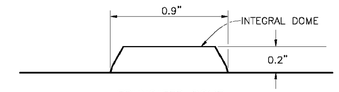

TRUNCATED DOME

CURB RAMP DETECTABLE WARNING DETAIL

NOTES:

DETECTABLE WARNINGS ON WALKING SURFACES

THE DETECTABLE WARNING SHALL EXTEND THE FULL WIDTH AND DEPTH OF THE CURB RAMP.

DETECTABLE WARNINGS SHALL CONSIST OF RAISED TRUNCATED DOMES WITH A DIAMETER OF NOMINAL 0.9 INCH, A HEIGHT OF NOMINAL 0.2 INCH AND A CENTER-TO-CENTER SPACING OF NOMINAL 2.35 INCH AND SHALL CONTRAST VISUALLY WITH ADJOINING SURFACES, EITHER LIGHT-ON-DARK, OR DARK-ON-LIGHT.

THE MATERIAL USED TO PROVIDE CONTRAST SHALL BE AN INTEGRAL PART OF THE WALKING SURFACE. DETECTABLE WARNINGS USED ON INTERIOR SURFACES SHALL DIFFER FROM ADJOINING WALKING SURFACES IN RESILIENCY OR SOUND-ON-CANE CONTACT.

THE MATERIAL USED TO PROVIDE CONTRAST SHOULD CONTRAST BY AT LEAST 70%. CONTRAST IN PERCENT IS DETERMINED BY:

CONTRAST = [(B1-B2)/B1] x 100

WHERE B1 = LIGHT REFLECTANCE VALUE (LRV) OF THE LIGHTER AREA AND B2 = LIGHT REFLECTANCE VALUE (LRV) OF THE DARKER AREA.

NOTE THAT IN ANY APPLICATION BOTH WHITE AND BLACK ARE NEVER ABSOLUTE; THUS, B1 NEVER EQUALS 100 AND B2 IS ALWAYS GREATER THAN 0.

MANATEE COUNTY TRANSPORTATION DEPARTMENT			
REV.BY	DATE	6/12/07 DATE OF B.O.C.C. APPROVAL	CURB RAMP DETECTABLE WARNINGS	302.3

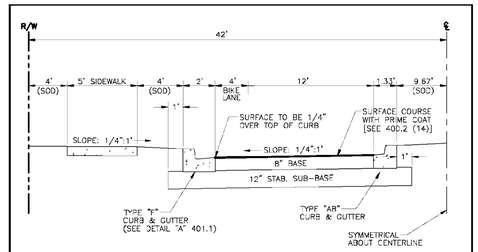

NOTES:

A) Asphaltic concrete surface course shall be 1-3/4" minimum thickness type S III. Two lifts of asphalt shall be required. A performance bond shall be required if the second lift is delayed beyond road acceptance. The first lift shall be 1"of S-I. The second lift shall be 3/4" of S-II. The final lift of asphalt may not be placed until Certificate of Occupancy has been issued for 50th percentile home or building for that street.

B) 8" base course 850 lbs. per sq. yd. limerock compacted to 98% modified proctor density or 8" soil cement.*

C) 12" stabilized sub-base shell marl blended with sandy sub-grade minimum LBR 60, 98% T180 AASHTO.

D) No portion of the drainage pipe shall be allowed in the sub-base.

E) See section 201.0 for curb and gutter types.

F) Sidewalk shall be constructed per section 300.

G) Laboratory tests are required to substantiate structural section design. Specifications shown on this sheet are minimum requirements.

H) Sodding shall be installed per section 400.1 (B)

* Or approved equal, meeting same structural number.

MANATEE COUNTY TRANSPORTATION DEPARTMENT			
REV.BY	DATE	6/12/07 DATE OF B.O.C.C. APPROVAL	2-LANE DIVIDED URBAN	401.3

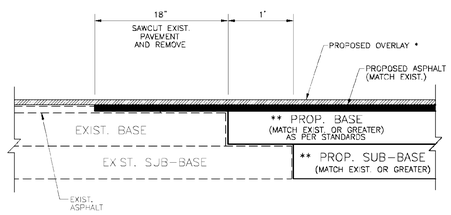

* NOTE: LIMITS OF OVERLAY – EDGE OF PAVEMENT TO EDGE OF PAVEMENT AND 25' BEYOND LIMITS OF CONSTRUCTION.

** NOTE: CONNECTION TO OLDER (SUBSTANDARD THICKNESS) ROADS MAY REQUIRE THICKER PROPOSED BASE AND SUB-BASE TO MEET CURRENT STANDARDS.

SIGNAGE AND MARKING PLAN SHALL ACCOMPANY CONSTRUCTION PLAN.

ROAD CONNECTION DETAIL
N.T.S.

MANATEE COUNTY TRANSPORTATION DEPARTMENT			
REV.BY	DATE	6/12/07 DATE OF B.O.C.C. APPROVAL	ROAD CONNECTION DETAIL	403.3

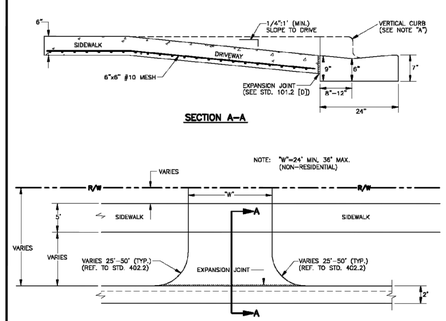

SECTION A–A

PLAN VIEW

A) IF REPLACING VERTICAL CURB AND GUTTER, REPLACE WITH MIAMI CURB AND GUTTER.
* NO CHANGE WITH 3' VALLEY CROSSING

B) SIDEWALK, CONSTRUCT WITH 6" CONCRETE, 6"x6" #10 MESH, 3000 PSI AT 28 DAYS.

C) DRIVEWAY CONSTRUCTED WITH 6" CONCRETE WITH 6"x6" #10 MESH, 3000 PSI AT 28 DAYS.

D) EXPANSION JOINT 1/2" PREFORMED JOINT FILLER PER FDOT SECTION 932-1.1 OR APPROVED ALTERNATE.
* IF DRIVE IS WIDER THAN 12', ADD JOINTS AT 10' CENTERS

E) 5' SIDEWALK ON LOCAL STREETS, 5' SIDEWALK ON THOROUGHFARES. (MIXED USE PATHS MAY REQUIRE 8' SIDEWALKS PER LAND DEVELOPMENT CODE.)

MANATEE COUNTY TRANSPORTATION DEPARTMENT			
REV.BY	DATE	6/12/07 DATE OF B.O.C.C. APPROVAL	COMMERCIAL & INDUSTRIAL DRIVE	101.3

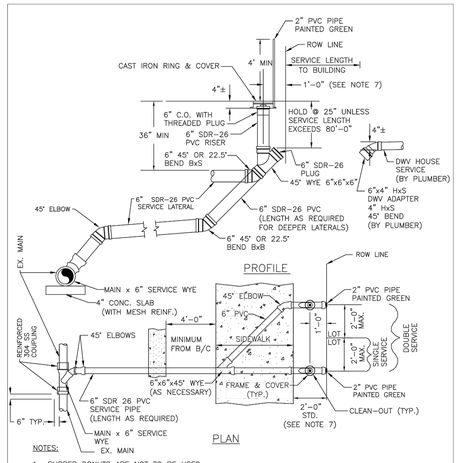

NOTES:

1. RUBBER DONUTS ARE NOT TO BE USED.
2. "SCO"TO BE IMPRESSED INTO THE NEWLY-POURED CONCRETE CURB, ALONG WITH DISTANCE IN FEET TO THE CLEAN-OUT. IF NO CURB INSTALL A GREEN DISC WITH "SCO" AND ⅜" X 1" GALVANIZED STEEL SCREW IN THE EDGE OF PAVEMENT WITH THE FOOTAGE FROM THE DISC TO THE CLEAN-OUT.
3. SANITARY SEWER CLEAN-OUTS SHALL NOT BE LOCATED IN DRAINAGE SWALES, EASEMENTS, SIDEWALKS OR DRIVEWAYS.
4. NO SERVICE CONNECTIONS TO BE MADE TO THE CLEAN-OUT RISER. ALL DOMESTIC CONNECTIONS SHALL BE MADE TO THE STUB-OUT PROVIDED.
5. SEWER SERVICE SHALL BE 5' MIN. FROM WATER SERVICE OR FIRE HYDRANT.
6. CLEAN-OUT ADAPTER TO BE SOLVENT-WELDED TO RISER TOP. CLEAN-OUT THREADS SHALL BE WRAPPED WITH TEFLON PLUMBERS TAPE TO SEAL PLUG WATERTIGHT.
7. WHEN THE DISTANCE BETWEEN THE EDGE OF THE SIDEWALK & THE ROW LINE IS ONE FOOT (CUL-DE-SAC W/MEDIAN) THE DISTANCE BETWEEN THE CENTER OF THE CLEAN-OUT RISER & THE ROW LINE SHALL BE 6".

MANATEE COUNTY PUBLIC WORKS DEPARTMENT			
REV.BY	DATE	February 25, 2020 DATE OF APPROVAL	CUT-IN SINGLE AND DOUBLE SERVICE WYES	US-13B

This document, together with the concepts and designs presented herein, as an instrument of service, is intended only for the specific purpose and client for which it was prepared. Reuse of and improper reliance on this document without written authorization and adaptation by Kimley-Horn and Associates, Inc. shall be without liability to Kimley-Horn and Associates, Inc.

No.	REVISIONS	DATE	BY

Kimley»Horn

© 2022 KIMLEY-HORN AND ASSOCIATES, INC.

100 2ND AVENUE SOUTH, SUITE 105-N, ST. PETERSBURG, FL 33701
PHONE: 727-547-3999
WWW.KIMLEY-HORN.COM REGISTRY NO. 35106

KHA PROJECT 148400067
DATE FEB 2022
SCALE AS SHOWN
DESIGNED BY MAS
DRAWN BY GMB
CHECKED BY SNR

Manatee County FLORIDA

BAYSHORE YACHT BASIN FORCE MAIN AND LIFT STATION REPLACEMENT

MANATEE COUNTY FL

LICENSED PROFESSIONAL
MICHAEL A. SEMAGO, P.E.
FL LICENSE NUMBER 87501
DATE:

CIVIL DETAILS

SHEET NUMBER
C-14

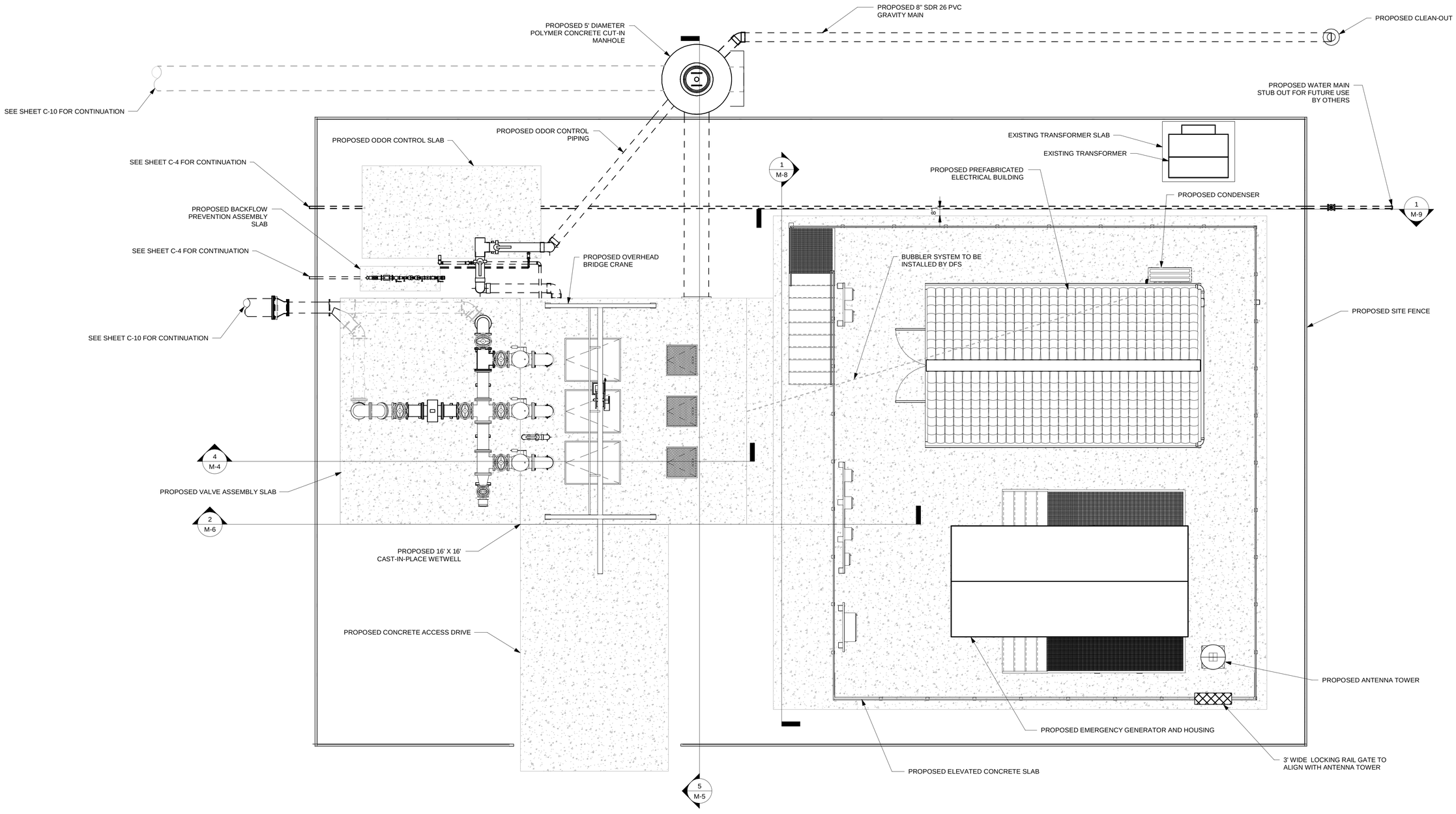

1 SITE PLAN
1/4" = 1'-0"

GRAPHIC SCALE IN INCHES
0 1/2" 1" 2"
0 4' 8'

NORTH

This document, together with the concepts and designs presented herein, as an instrument of service, is intended only for the specific purpose and client for which it was prepared. Reuse of and improper reliance on this document without written authorization and adaptation by Kimley-Horn and Associates, Inc. shall be without liability to Kimley-Horn and Associates, Inc.

No.	REVISIONS	DATE	BY

Kimley»Horn

© 2022 KIMLEY-HORN AND ASSOCIATES, INC.

100 2ND AVE S, SUITE 105N, ST. PETERSBURG, FL 33701
PHONE: 727-547-3999
WWW.KIMLEY-HORN.COM REGISTRY No. 35106

KHA PROJECT 148400067
DATE FEB 2022
SCALE: AS SHOWN
DESIGNED BY: MAS
DRAWN BY: RLL
CHECKED BY: SNR

Manatee County FLORIDA

BAYSHORE YACHT BASIN FORCE MAIN AND LIFT STATION REPLACEMENT

MANATEE COUNTY FL

LICENSED PROFESSIONAL:

MICHAEL A. SEMAGO, P.E.
FL LICENSE NUMBER 87501
DATE:

LIFT STATION SITE PLAN

SHEET NUMBER
M-1

This document, together with the concepts and designs presented herein, as an instrument of service, is intended only for the specific purpose and client for which it was prepared. Reuse of and improper reliance on this document without written authorization and adaptation by Kimley-Horn and Associates, Inc. shall be without liability to Kimley-Horn and Associates, Inc.

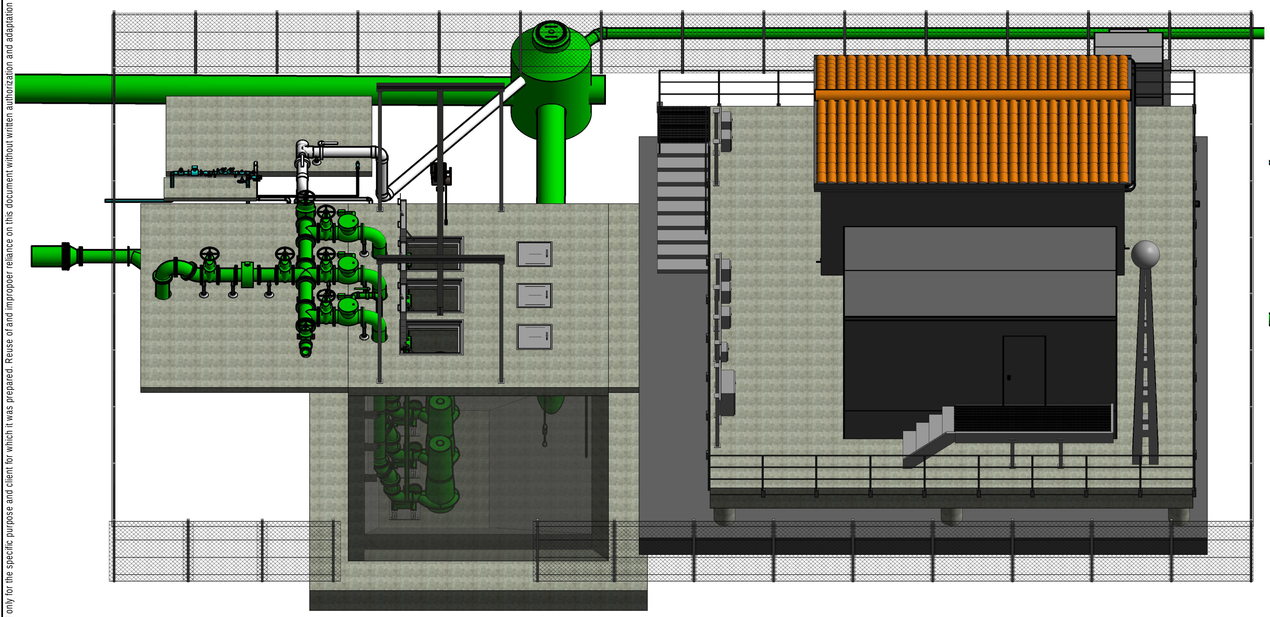

1 ISOMETRIC VIEW 1

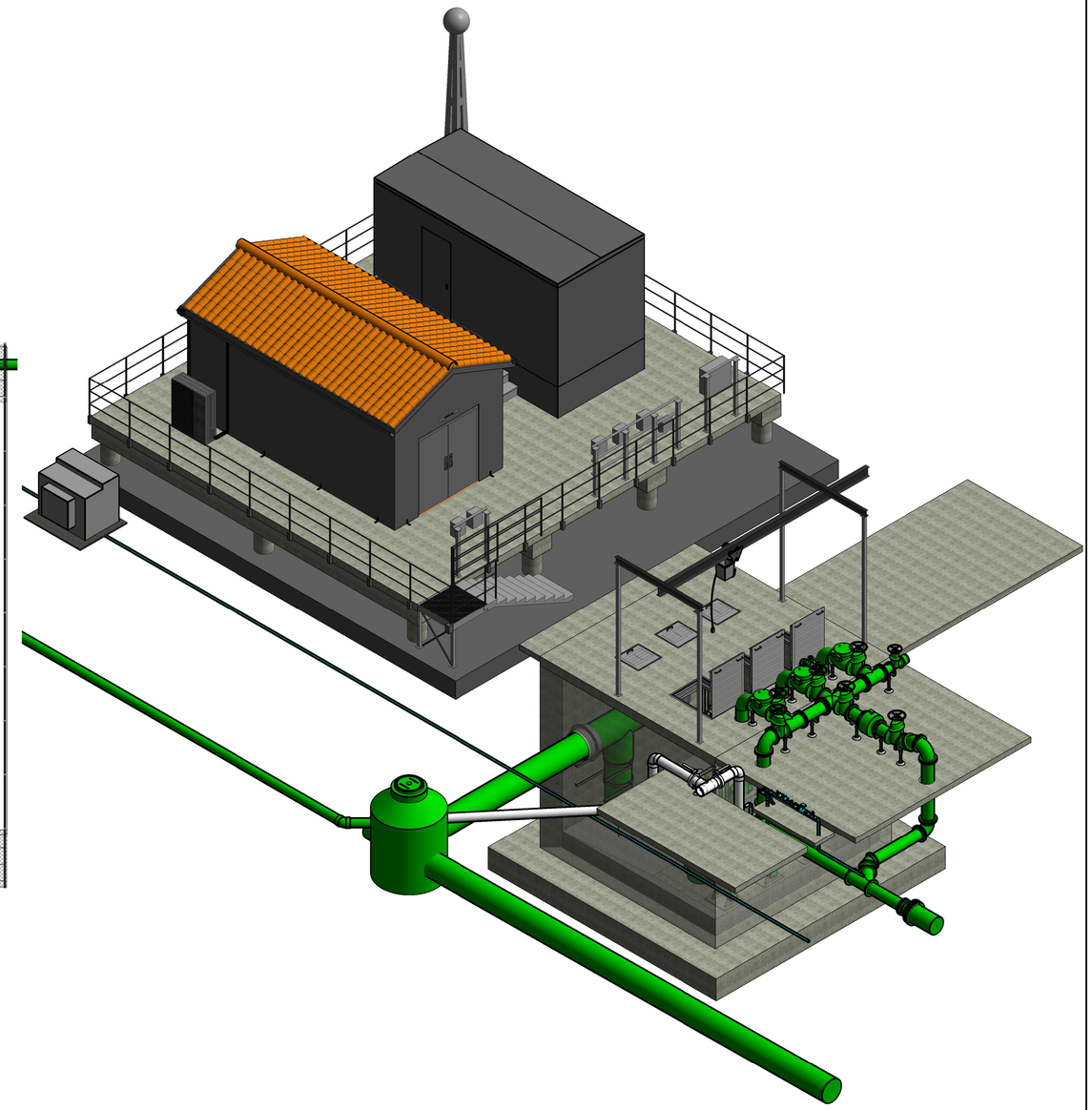

2 ISOMETRIC VIEW 2

No.	REVISIONS	DATE	BY

Kimley»Horn

© 2022 KIMLEY-HORN AND ASSOCIATES, INC.

100 2ND AVE S, SUITE 105N, ST. PETERSBURG, FL 33701
PHONE: 727-547-3999
WWW.KIMLEY-HORN.COM REGISTRY No. 35106

KHA PROJECT 148400067

DATE FEB 2022

SCALE: AS SHOWN
DESIGNED BY: MAS
DRAWN BY: RLL
CHECKED BY: SNR

Manatee County FLORIDA

BAYSHORE YACHT BASIN FORCE MAIN AND LIFT STATION REPLACEMENT

MANATEE COUNTY FL

LICENSED PROFESSIONAL:

MICHAEL A. SEMAGO, P.E.

FL LICENSE NUMBER 87501

DATE:

ISOMETRIC VIEWS

SHEET NUMBER

M-2

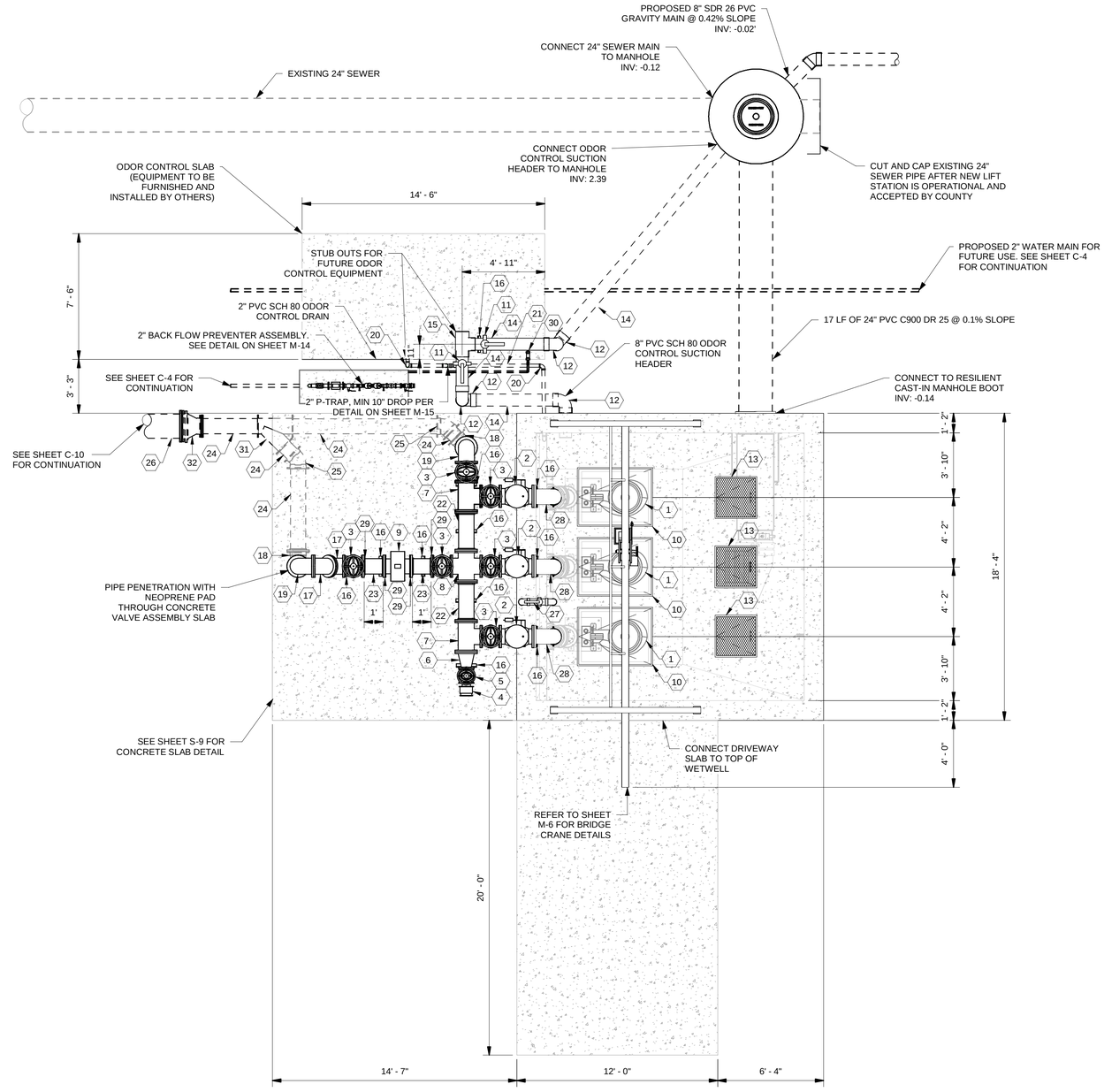

3 MECHANICAL PLAN
1/4" = 1'-0"

GRAPHIC SCALE IN INCHES
0 1/2" 1" 2"
0 4' 8'

NORTH

KEYNOTE LEGEND	
KEY VALUE	KEYNOTE TEXT
1	100 HP HYDROMATIC SUBMERSIBLE PUMP MODEL S8LXP, 1350 GPM @ 120 TDH, IMPELLER: HYDROMATIC 12.13"
2	10" SWING CHECK VALVE, FL
3	10" NRS GATE VALVE, FL
4	ALUMINUM FLANGE WITH ALUMINUM 6" CAMLOCK FITTING AND DUST CAP (SEE DETAIL ON SHEET M-15)
5	6" NRS GATE VALVE, FL
6	10"X6" D.I. REDUCER, FL
7	10" D.I. TEE, FL
8	10" D.I. CROSS , FL
9	10" MCCROMETER ULTRA MAG UM-06
10	36" X 48" ALUMINUM PUMP ACCESS HATCH
11	8" PVC SCH 80 BUTTERFLY VALVE
12	8" PVC SCH 80 90 DEG BEND
13	24" X 24" ALUMINUM ACCESS HATCH WITH SAFETY GRATE (TYP. OF 3)
14	8" PVC SCH 80 PIPE
15	8" PVC SCH 80 TEE
16	316 SS FLANGE PIPE SUPPORT (SEE DETAIL ON SHEET M-14)
17	10" D.I. 45 DEG BEND, FL
18	10" D.I. 90 DEG BEND, MJ
19	10" D.I. 90 DEG BEND, FL
20	2" PVC SCH 80 90 DEG BEND
21	2" PVC SCH 80 PIPE
22	10" D.I. SPOOL PIECE, FL
23	1 LF 10" D.I. SPOOL PIECE, FL
24	10" PVC C900 DR 18 PIPE
25	10" D.I. 45 DEG BEND, MJ
26	16" PVC C900 DR 18 PIPE
27	4" PVC BUTTERFLY VALVE
28	10" MOLDED HDPE 90 DEG BEND, DIPS
29	FLANGE ADAPTER
30	1.5" PVC SCH80 BALL VALVE
31	10" D.I. WYE, MJ
32	10"X16" D.I. REDUCER, MJ

This document, together with the concepts and designs presented herein, as an instrument of service, is intended only for the specific purpose and client for which it was prepared. Reuse of and improper reliance on this document without written authorization and adaptation by Kimley-Horn and Associates, Inc. shall be without liability to Kimley-Horn and Associates, Inc.

No.	REVISIONS	DATE	BY

Kimley»Horn

© 2022 KIMLEY-HORN AND ASSOCIATES, INC.

100 2ND AVE S, SUITE 105N, ST. PETERSBURG, FL 33701
PHONE: 727-547-3999
WWW.KIMLEY-HORN.COM REGISTRY No. 35106

KHA PROJECT 148400067
DATE FEB 2022
SCALE: AS SHOWN
DESIGNED BY: MAS
DRAWN BY: RLL
CHECKED BY: SNR

Manatee County FLORIDA

BAYSHORE YACHT BASIN FORCE MAIN AND LIFT STATION REPLACEMENT

MANATEE COUNTY FL

LICENSED PROFESSIONAL:
MICHAEL A. SEMAGO, P.E.
FL LICENSE NUMBER 87501
DATE:

WETWELL PLAN

SHEET NUMBER
M-3

This document, together with the concepts and designs presented herein, as an instrument of service, is intended only for the specific purpose and client for which it was prepared. Reuse of and improper reliance on this document without written authorization and adaptation by Kimley-Horn and Associates, Inc. shall be without liability to Kimley-Horn and Associates, Inc.

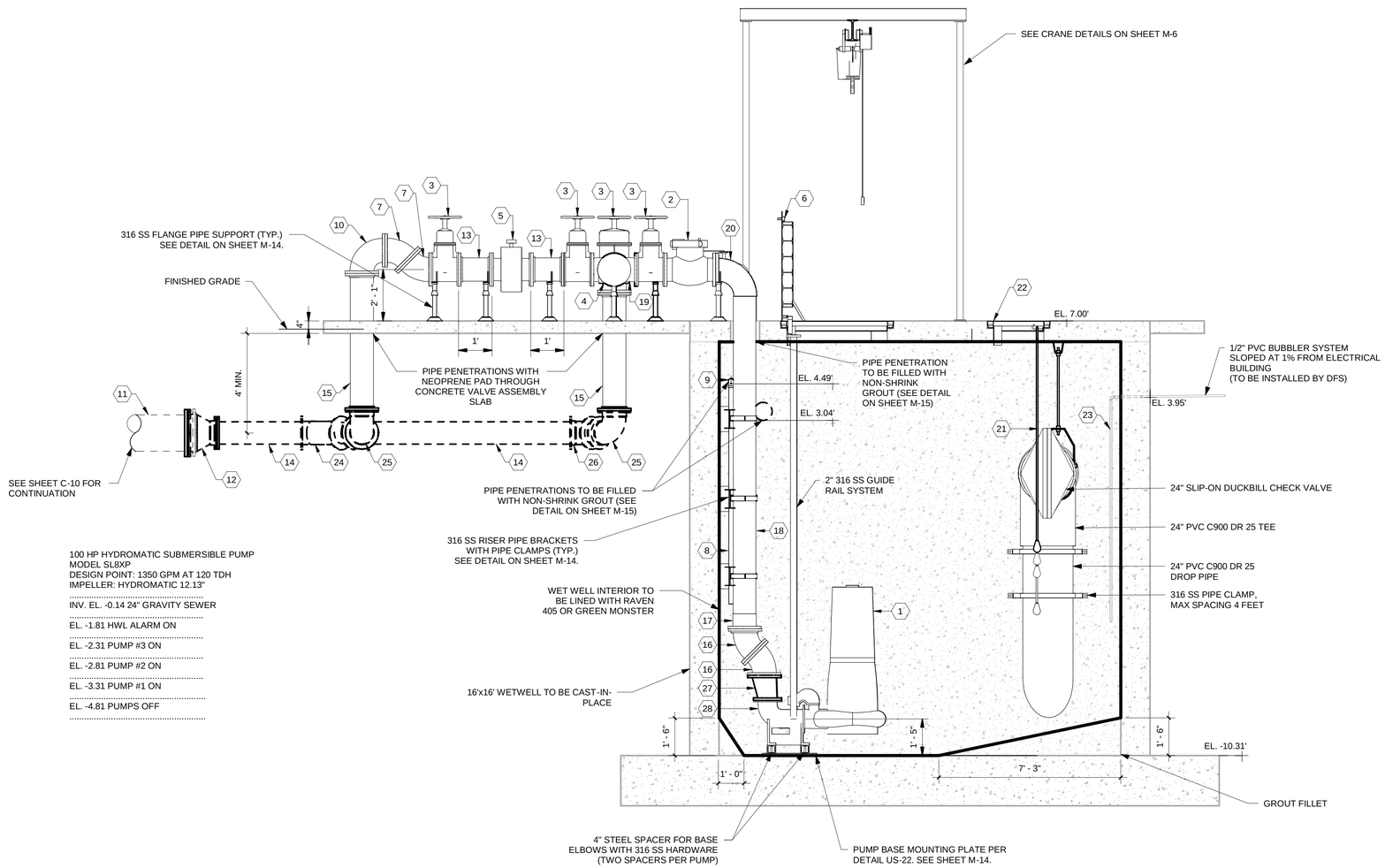

100 HP HYDROMATIC SUBMERSIBLE PUMP
MODEL SL8XP
DESIGN POINT: 1350 GPM AT 120 TDH
IMPELLER: HYDROMATIC 12.13"

INV. EL. -0.14 24" GRAVITY SEWER

EL. -1.81 HWL ALARM ON

EL. -2.31 PUMP #3 ON

EL. -2.81 PUMP #2 ON

EL. -3.31 PUMP #1 ON

EL. -4.81 PUMPS OFF

GRAPHIC SCALE IN INCHES
0 2' 4'
0 3/4" 1-1/2"

4 / M-1 WET WELL SECTION
3/8" = 1'-0"

KEYNOTE LEGEND

KEY VALUE	KEYNOTE TEXT
1	100 HP HYDROMATIC SUBMERSIBLE PUMP MODEL S8LXP, 1350 GPM @ 120 TDH, IMPELLER: HYDROMATIC 12.13"
2	10" SWING CHECK VALVE, FL
3	10" NRS GATE VALVE, FL
4	10" D.I. TEE, FL
5	10" MCCROMETER ULTRA MAG UM-06
6	36" X 48" ALUMINUM PUMP ACCESS HATCH WITH SAFETY GRATE (TYP. OF 3)
7	10" D.I. 45 DEG BEND, FL
8	2" PVC SCH 80 PIPE
9	2" PVC SCH 80 90 DEG BEND
10	10" D.I. 90 DEG BEND, FL
11	16" PVC C900 DR 18 PIPE
12	10"X16" D.I. REDUCER, MJ
13	1 LF 10" D.I. SPOOL PIECE, FL
14	10" PVC C900 DR 18 PIPE
15	10" D.I. SPOOL PIECE, FL
16	10" D.I. 45 DEG BEND
17	10" HDPE FLANGE ADAPTOR W/ 316 SS BACKUP RING, DIPS
18	10" HDPE DR 11 DIPS PIPE
19	10" D.I. CROSS , FL
20	10" MOLDED HDPE 90 DEG BEND, DIPS
21	LEVEL FLOAT
22	24" X 24" ALUMINUM ACCESS HATCH WITH SAFETY GRATE (TYP. OF 3)
23	BUBBLER SYSTEM/TCU 800 CONTROLLER INSTALLED BY DATA FLOW SYSTEMS
24	10" D.I. WYE, MJ
25	10" D.I. 90 DEG BEND, MJ
26	10" D.I. 45 DEG BEND, MJ
27	10" X 8" D.I. ECCENTRIC REDUCER WITH PERMOX CTF COATING OR APPROVED EQUAL
28	8" BPIU PUMP BASE ELBOW

No.	REVISIONS	DATE	BY

Kimley»Horn

© 2022 KIMLEY-HORN AND ASSOCIATES, INC.

100 2ND AVE S, SUITE 105N, ST. PETERSBURG, FL 33701
PHONE: 727-547-3999
WWW.KIMLEY-HORN.COM REGISTRY No. 35106

KHA PROJECT 148400067
DATE FEB 2022
SCALE: AS SHOWN
DESIGNED BY: MAS
DRAWN BY: RLL
CHECKED BY: SNR

Manatee County FLORIDA

BAYSHORE YACHT BASIN FORCE MAIN AND LIFT STATION REPLACEMENT

MANATEE COUNTY FL

LICENSED PROFESSIONAL:

MICHAEL A. SEMAGO, P.E.
FL LICENSE NUMBER 87501
DATE:

WETWELL CROSS SECTION I

SHEET NUMBER
M-4

SHEET KEYNOTE LEGEND	
KEYNOTE	DESCRIPTION
1	100 HP HYDROMATIC SUBMERSIBLE PUMP MODEL S8LXP, 1350 GPM @ 120 TDH, IMPELLER: HYDROMATIC 12.13"
2	8" PVC SCH 80 BUTTERFLY VALVE
3	8" PVC SCH 80 90 DEG BEND
4	8" PVC SCH 80 PIPE
5	10" NRS GATE VALVE, FL
6	ALUMINUM FLANGE WITH ALUMINUM 6" CAMLOCK FITTING AND DUST CAP (SEE DETAIL ON SHEET M-15)
7	2" PVC SCH 80 PIPE
8	2" PVC SCH 80 90 DEG BEND
9	6" NRS GATE VALVE, FL
10	10"X6" D.I. REDUCER, FL
11	10" MOLDED HDPE 90 DEG BEND, DIPS
12	316 SS FLANGE PIPE SUPPORT (SEE DETAIL ON SHEET M-14)
13	10" D.I. 90 DEG BEND, FL
14	FLANGE ADAPTER
15	10" D.I. SPOOL PIECE, FL

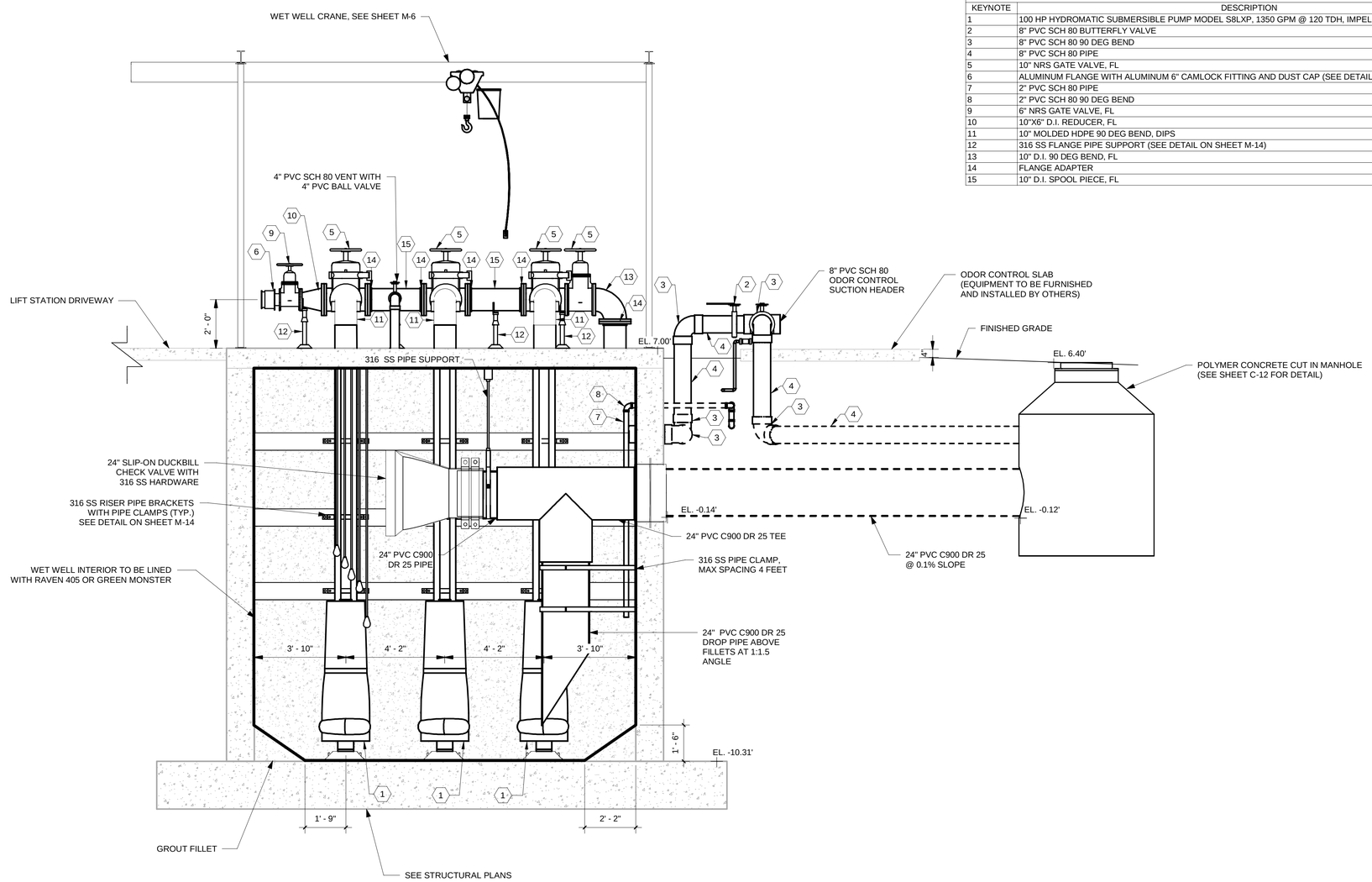

5
M-1
WET WELL INLET SECTION
3/8" = 1'-0"

GRAPHIC SCALE IN INCHES
0 2' 4'
0 3/4" 1-1/2"

This document, together with the concepts and designs presented herein, as an instrument of service, is intended only for the specific purpose and client for which it was prepared. Reuse of and improper reliance on this document without written authorization and adaptation by Kimley-Horn and Associates, Inc. shall be without liability to Kimley-Horn and Associates, Inc.

No.	REVISIONS	DATE	BY

Kimley»Horn
© 2022 KIMLEY-HORN AND ASSOCIATES, INC.
100 2ND AVE S, SUITE 105N, ST. PETERSBURG, FL 33701
PHONE: 727-547-3999
WWW.KIMLEY-HORN.COM REGISTRY No. 35106

KHA PROJECT 148400067
DATE FEB 2022
SCALE: AS SHOWN
DESIGNED BY: MAS
DRAWN BY: RLL
CHECKED BY: SNR

Manatee County FLORIDA

BAYSHORE YACHT BASIN FORCE MAIN AND LIFT STATION REPLACEMENT
MANATEE COUNTY FL

LICENSED PROFESSIONAL:
MICHAEL A. SEMAGO, P.E.
FL LICENSE NUMBER 87501
DATE:

WETWELL CROSS SECTION II

SHEET NUMBER
M-5

This document, together with the concepts and designs presented herein, as an instrument of service, is intended only for the specific purpose and client for which it was prepared. Reuse of and improper reliance on this document without written authorization and adaptation by Kimley-Horn and Associates, Inc. shall be without liability to Kimley-Horn and Associates, Inc.

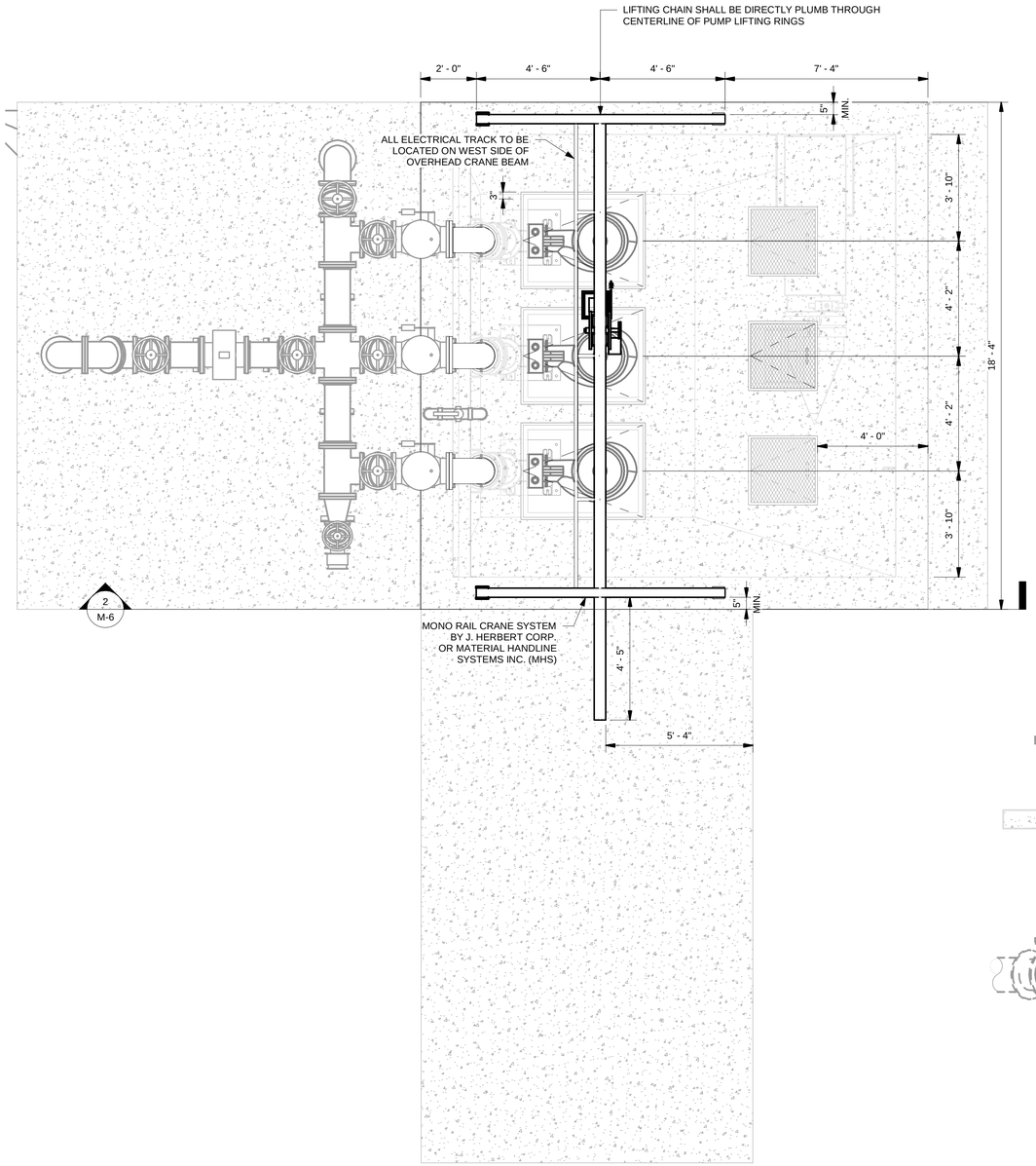

1 FREE STANDING CRANE PLAN
3/8" = 1'-0"

GRAPHIC SCALE IN INCHES
0 2' 4'
0 3/4" 1-1/2"

NORTH

NOTE:

1. ALL CRANE STRUCTURAL COMPONENTS SHALL BE DESIGNED, SIGNED AND SEALED BY PROFESSIONAL ENGINEER FROM MANUFACTURER
2. ALL CRANE COMPONENTS SHALL BE GRAY PRIMED AND HAVE AN OUTDOOR CORROSION RESISTANT ACRYLIC ENAMEL PAINT FINISH
3. ALL ELECTRICAL EQUIPMENT SHALL BE IP55 RATED FOR OUTDOOR ENVIRONMENTAL USE
4. CONTRACTOR TO INSTALL CRANE AND COMPONENTS PER MANUFACTURER RECOMMENDATION
5. CONTRACTOR TO COORDINATE WITH MANUFACTURER FOR BOLTS PATTERN TEMPLATES AND ANCHOR BOLTS
6. CONTRACTOR TO INSTALL FULLY FUNCTIONAL CRANE SYSTEM
7. CONTRACTOR TO SUPPLY ENOUGH ELECTRICAL CABLE TO REACH HOIST DISCONNECT FROM ALL POINTS OF TRAVEL
8. CONTRACTOR SHALL LOAD TEST THE RATED CAPACITY OF THE CRANE PER MANUFACTURER RECOMMENDATIONS
9. CRANE SHALL BE FIELD MOUNTED PLUMB.
10. CONTRACTOR SHALL CONFIRM CLEAR DISTANCE OF PROVIDED PUMP AND HOIST.

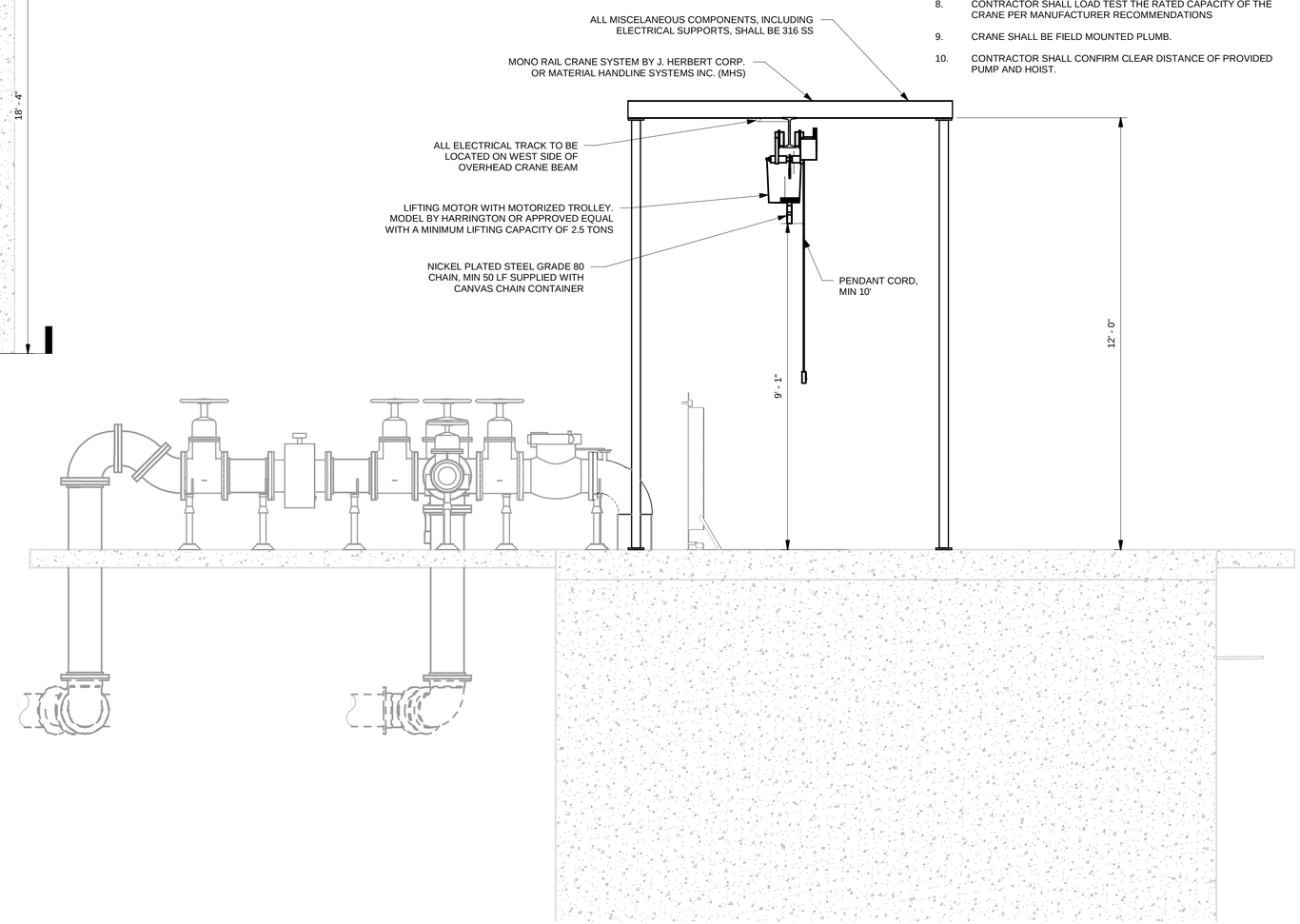

2 FREE STANDING CRANE SECTION
M-1
1/2" = 1'-0"

GRAPHIC SCALE IN INCHES
0 1/2" 1" 2"
0 2' 4'

No.	REVISIONS	DATE	BY

Kimley»Horn

© 2022 KIMLEY-HORN AND ASSOCIATES, INC.
100 2ND AVE S, SUITE 105N, ST. PETERSBURG, FL 33701
PHONE: 727-547-3999
WWW.KIMLEY-HORN.COM REGISTRY No. 35106

KHA PROJECT 148400067
DATE FEB 2022
SCALE: AS SHOWN
DESIGNED BY: MAS
DRAWN BY: RLL
CHECKED BY: SNR

Manatee County FLORIDA

BAYSHORE YACHT BASIN FORCE MAIN AND LIFT STATION REPLACEMENT
MANATEE COUNTY FL

LICENSED PROFESSIONAL:
MICHAEL A. SEMAGO, P.E.
FL LICENSE NUMBER 87501
DATE:

WETWELL CRANE

SHEET NUMBER
M-6

This document, together with the concepts and designs presented herein, as an instrument of service, is intended only for the specific purpose and client for which it was prepared. Reuse of and improper reliance on this document without written authorization and adaptation by Kimley-Horn and Associates, Inc. shall be without liability to Kimley-Horn and Associates, Inc.

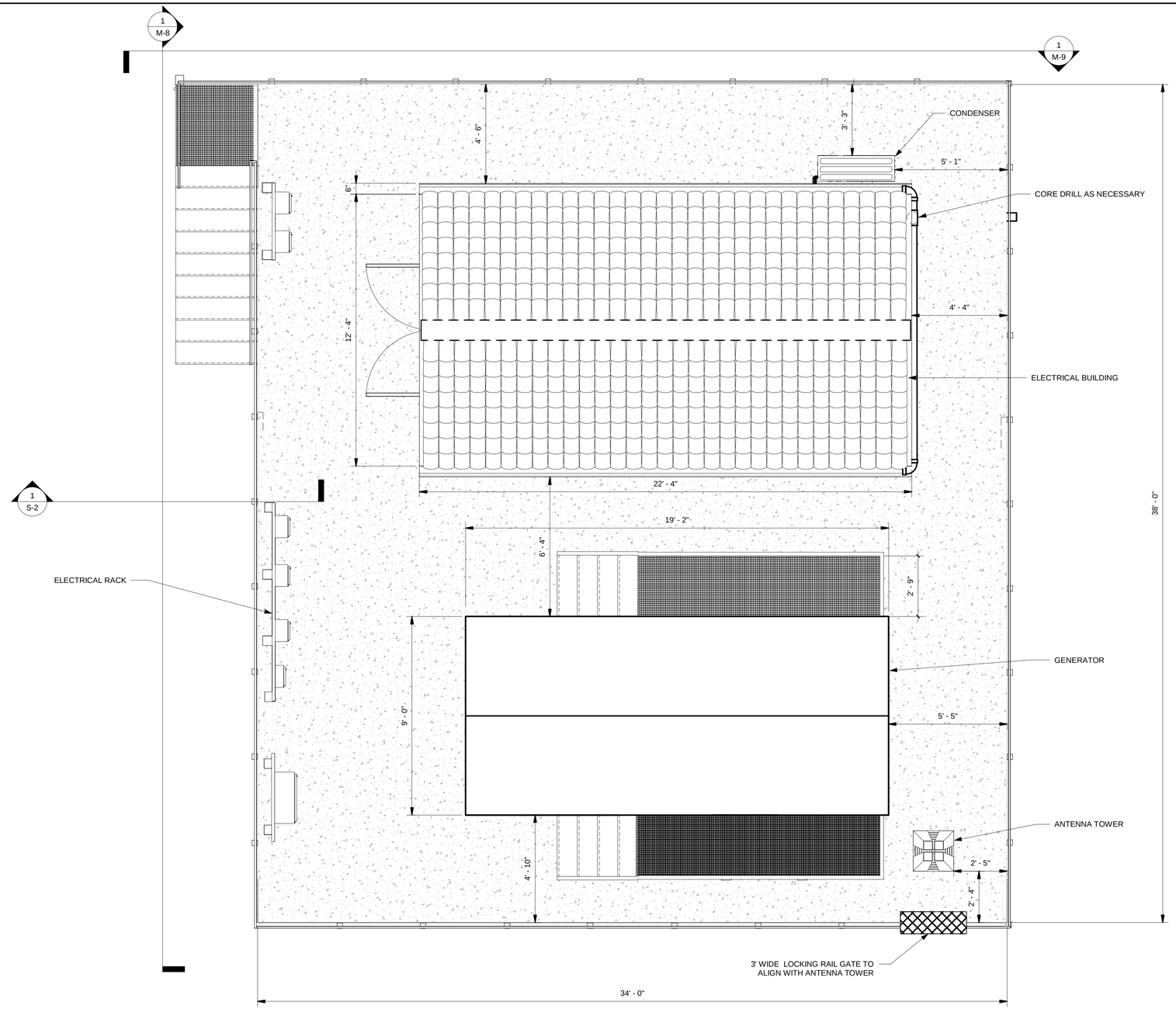

1 ELECTRICAL SLAB LAYOUT
3/8" = 1'-0"

GRAPHIC SCALE IN INCHES
0 2' 4'
0 3/4" 1-1/2"

NORTH

No.	REVISIONS	DATE	BY

Kimley»Horn

© 2022 KIMLEY-HORN AND ASSOCIATES, INC.
100 2ND AVE S, SUITE 105N, ST. PETERSBURG, FL 33701
PHONE: 727-547-3999
WWW.KIMLEY-HORN.COM REGISTRY No. 35106

KHA PROJECT 148400067
DATE FEB 2022
SCALE: AS SHOWN
DESIGNED BY: MAS
DRAWN BY: RLL
CHECKED BY: SNR

Manatee County FLORIDA

BAYSHORE YACHT BASIN FORCE MAIN AND LIFT STATION REPLACEMENT
MANATEE COUNTY FL

LICENSED PROFESSIONAL:
MICHAEL A. SEMAGO, P.E.
FL LICENSE NUMBER 87501
DATE:

ELEVATED PLATFORM PLAN

SHEET NUMBER
M-7

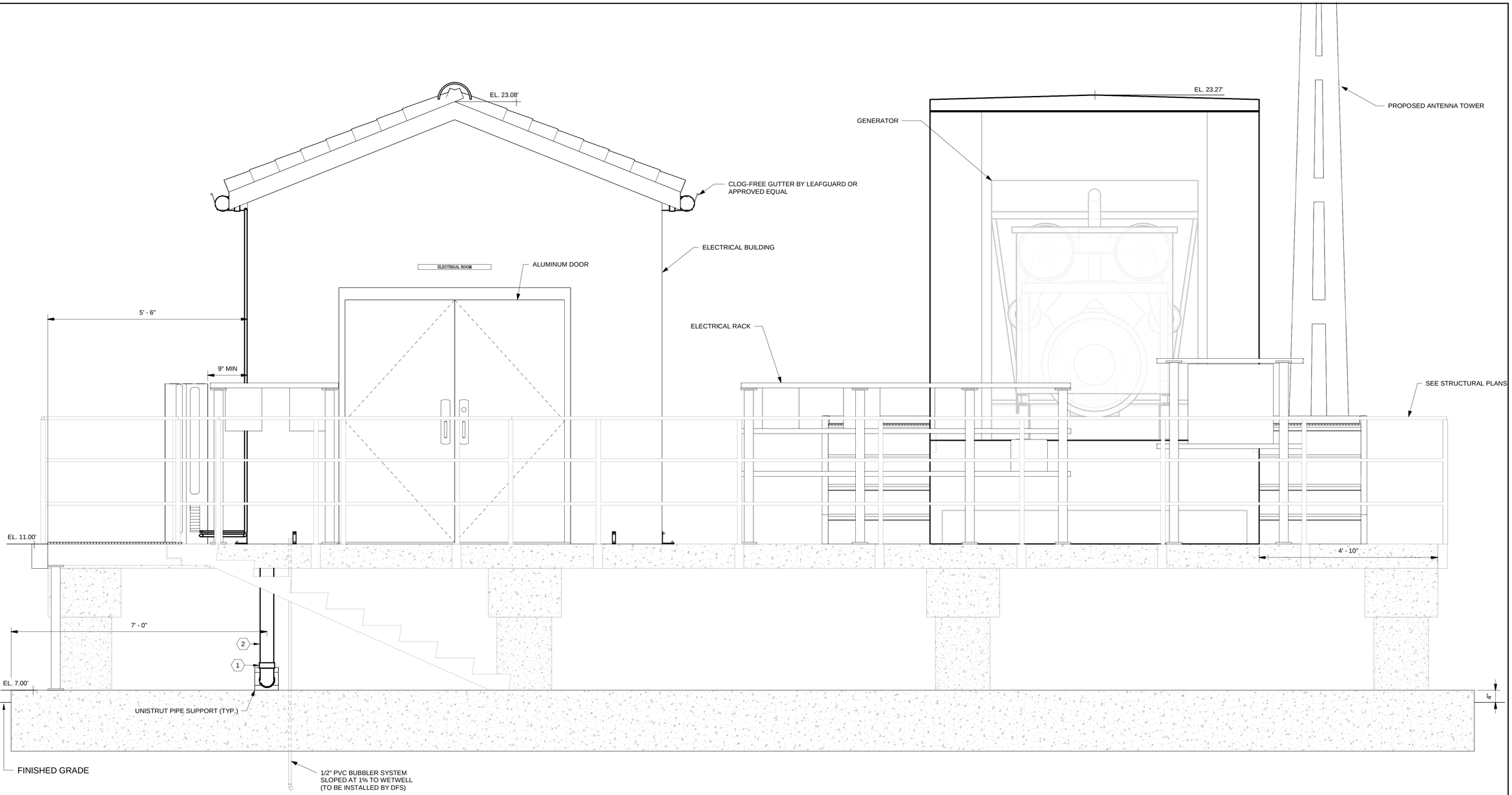

1 ELECTRICAL BUILDING WEST ELEVATION
3/4" = 1'-0"

GRAPHIC SCALE IN INCHES
0 1' 2'
0 3/4" 1-1/2"

KEYNOTE LEGEND	
KEY VALUE	KEYNOTE TEXT
1	4" PVC SCH 80 90 DEG BEND
2	4" PVC SCH 80 PIPE

This document, together with the concepts and designs presented herein, as an instrument of service, is intended only for the specific purpose and client for which it was prepared. Reuse of and improper reliance on this document without written authorization and adaptation by Kimley-Horn and Associates, Inc. shall be without liability to Kimley-Horn and Associates, Inc.

No.	REVISIONS	DATE	BY

Kimley»Horn

© 2022 KIMLEY-HORN AND ASSOCIATES, INC.

100 2ND AVE S, SUITE 105N, ST. PETERSBURG, FL 33701
PHONE: 727-547-3999
WWW.KIMLEY-HORN.COM REGISTRY No. 35106

KHA PROJECT 148400067
DATE FEB 2022
SCALE: AS SHOWN
DESIGNED BY: MAS
DRAWN BY: RLL
CHECKED BY: SNR

Manatee County FLORIDA

BAYSHORE YACHT BASIN FORCE MAIN AND LIFT STATION REPLACEMENT

MANATEE COUNTY FL

LICENSED PROFESSIONAL:

MICHAEL A. SEMAGO, PE
FL LICENSE NUMBER 87501
DATE:

ELECTRICAL BUILDING WEST ELEVATION

SHEET NUMBER
M-8

This document, together with the concepts and designs presented herein, as an instrument of service, is intended only for the specific purpose and client for which it was prepared. Reuse of and improper reliance on this document without written authorization and adaptation by Kimley-Horn and Associates, Inc. shall be without liability to Kimley-Horn and Associates, Inc.

KEYNOTE LEGEND	
KEY VALUE	KEYNOTE TEXT
1	4" PVC SCH 80 PIPE
2	4" PVC SCH 80 90 DEG BEND
3	4" PVC SCH 80 TEE

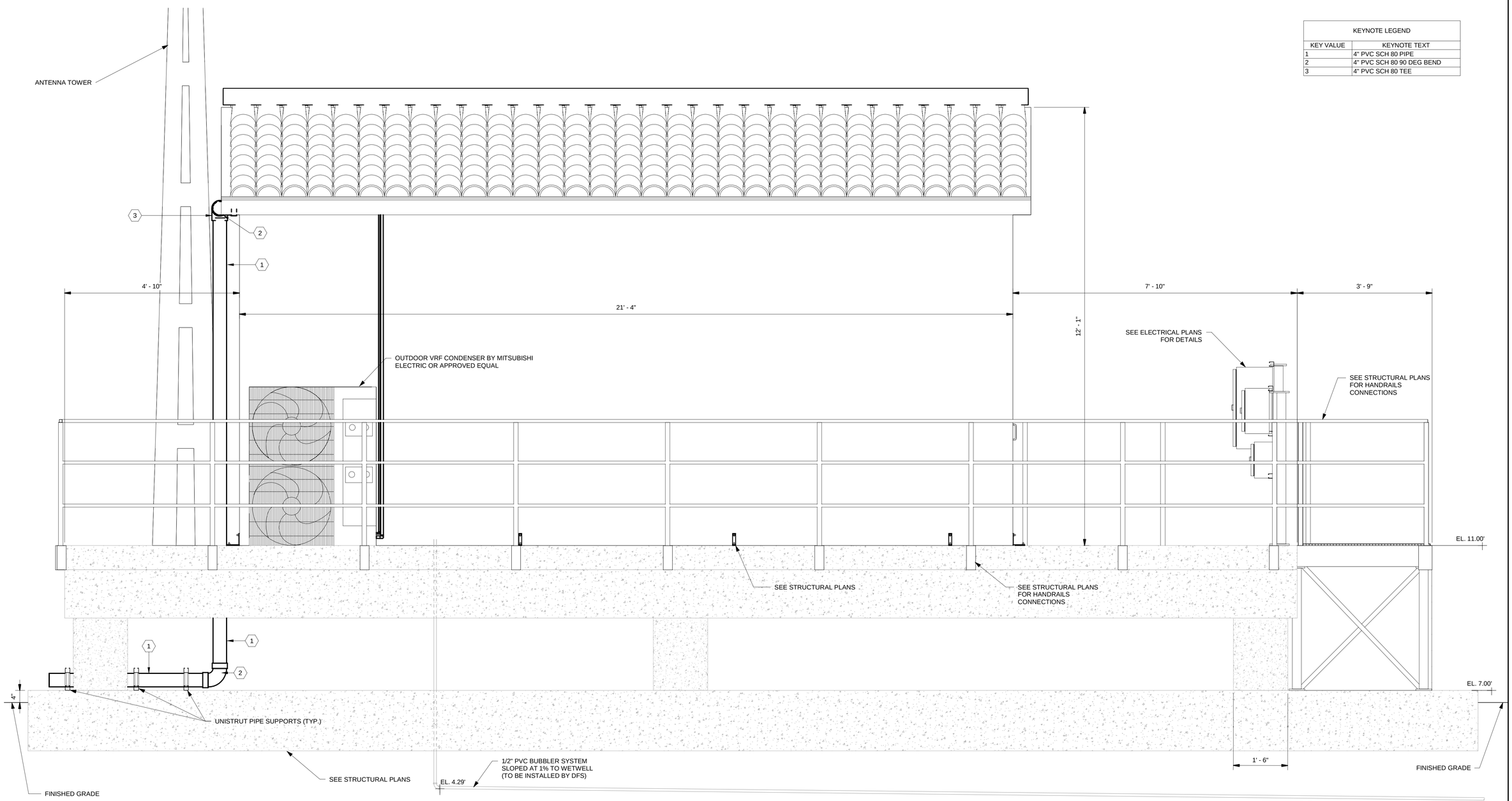

1 ELECTRICAL BUILDING NORTH ELEVATION
3/4" = 1'-0"

GRAPHIC SCALE IN INCHES
0 1' 2'
0 3/4" 1-1/2"

No.	REVISIONS	DATE	BY

Kimley»Horn

© 2022 KIMLEY-HORN AND ASSOCIATES, INC.

100 2ND AVE S, SUITE 105N, ST. PETERSBURG, FL 33701
PHONE: 727-547-3999
WWW.KIMLEY-HORN.COM REGISTRY No. 35106

KHA PROJECT 148400067
DATE FEB 2022
SCALE: AS SHOWN
DESIGNED BY: MAS
DRAWN BY: RLL
CHECKED BY: SNR

Manatee County FLORIDA

BAYSHORE YACHT BASIN FORCE MAIN AND LIFT STATION REPLACEMENT

MANATEE COUNTY FL

LICENSED PROFESSIONAL:

MICHAEL A. SEMAGO, P.E.

FL LICENSE NUMBER 87501

DATE:

ELECTRICAL BUILDING NORTH ELEVATION

SHEET NUMBER

M-9

This document, together with the concepts and designs presented herein, as an instrument of service, is intended only for the specific purpose and client for which it was prepared. Reuse of and improper reliance on this document without written authorization and adaptation by Kimley-Horn and Associates, Inc. shall be without liability to Kimley-Horn and Associates, Inc.

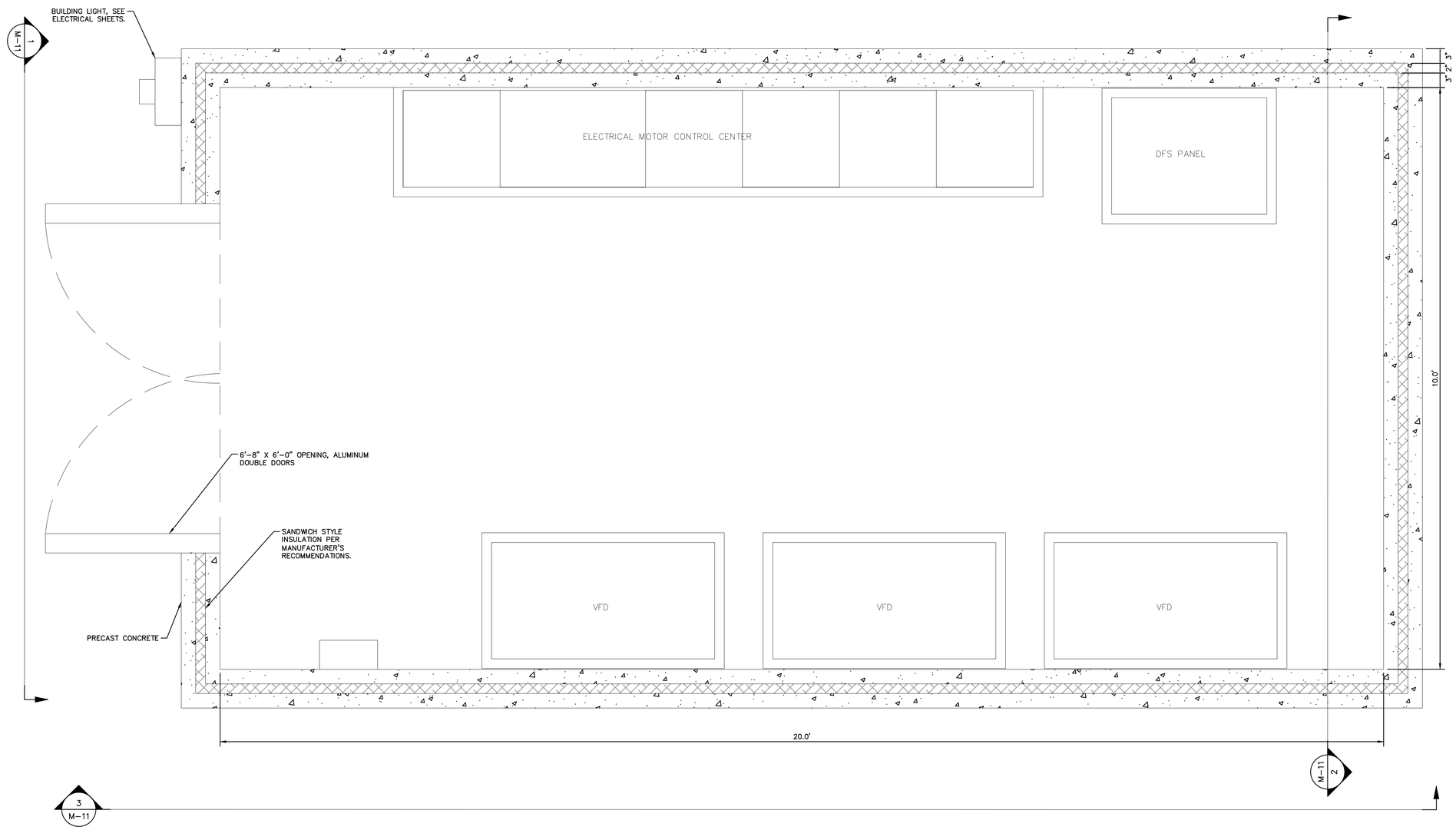

NOTES:

1. CONTRACTOR SHALL COORDINATE WITH PREFABRICATED BUILDING SUPPLIER FOR PIPE PENETRATIONS AND EQUIPMENT INSTALLATION DURING SHOP DRAWING REVIEW.
2. BUILDING SHALL BE FURNISHED PER SPECIFICATION SECTION 13340.
3. ALL HARDWARE SHALL BE ALUMINUM WHERE POSSIBLE OR 316 STAINLESS STEEL.
4. BUILDING DOORS SHALL BE ALUMINUM.
5. ALL GUTTERS AND DOWN SPOUTS SHALL BE LEAFGUARD® OR APPROVED EQUAL.
6. FIRE EXTINGUISHER SHALL BE FURNISHED INSIDE BUILDING (FIELD LOCATE WITH COUNTY INSPECTOR).
7. BUILDING SHALL HAVE A LIGHT BEIGE STUCCO FINISH WITH RED TILE ROOF APPLIED PER MANUFACTURER'S RECOMMENDATIONS. FINISH COLOR SHALL BE COORDINATED AND APPROVED BY MANATEE COUNTY BEFORE FABRICATION OR CONSTRUCTION.

1 / M-10 PREFABRICATED BUILDING PLAN
SCALE: 1" = 1'

No.	REVISIONS	DATE	BY

Kimley»Horn

© 2022 KIMLEY-HORN AND ASSOCIATES, INC.
100 2ND AVENUE SOUTH, SUITE 105-N, ST. PETERSBURG, FL 33701
PHONE: 727-547-3999
WWW.KIMLEY-HORN.COM REGISTRY NO. 35106

KHA PROJECT 148400067
DATE FEB 2022
SCALE AS SHOWN
DESIGNED BY MAS
DRAWN BY GMB
CHECKED BY SNR

Manatee County FLORIDA

BAYSHORE YACHT BASIN FORCE MAIN AND LIFT STATION REPLACEMENT
MANATEE COUNTY FL

LICENSED PROFESSIONAL
MICHAEL A. SEMAGO, P.E.
FL LICENSE NUMBER 87501
DATE:

PREFABRICATED BUILDING - PLAN

SHEET NUMBER
M-10

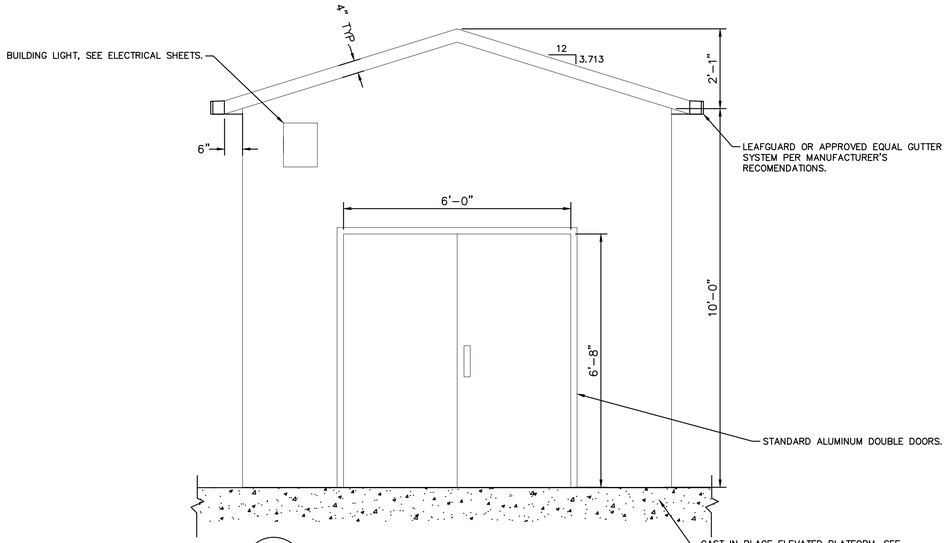

1 / M-10 PREFABRICATED BUILDING SECTION
SCALE: 1"=2'

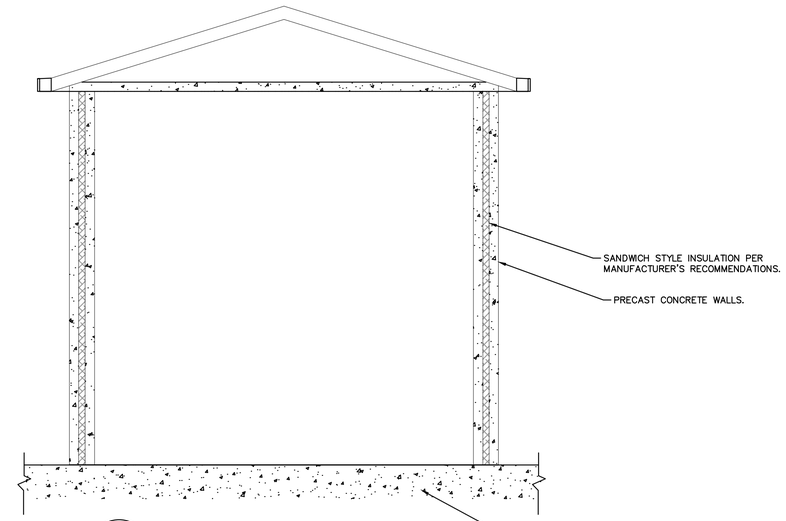

2 / M-10 PREFABRICATED BUILDING SECTION
SCALE: 1"=2'

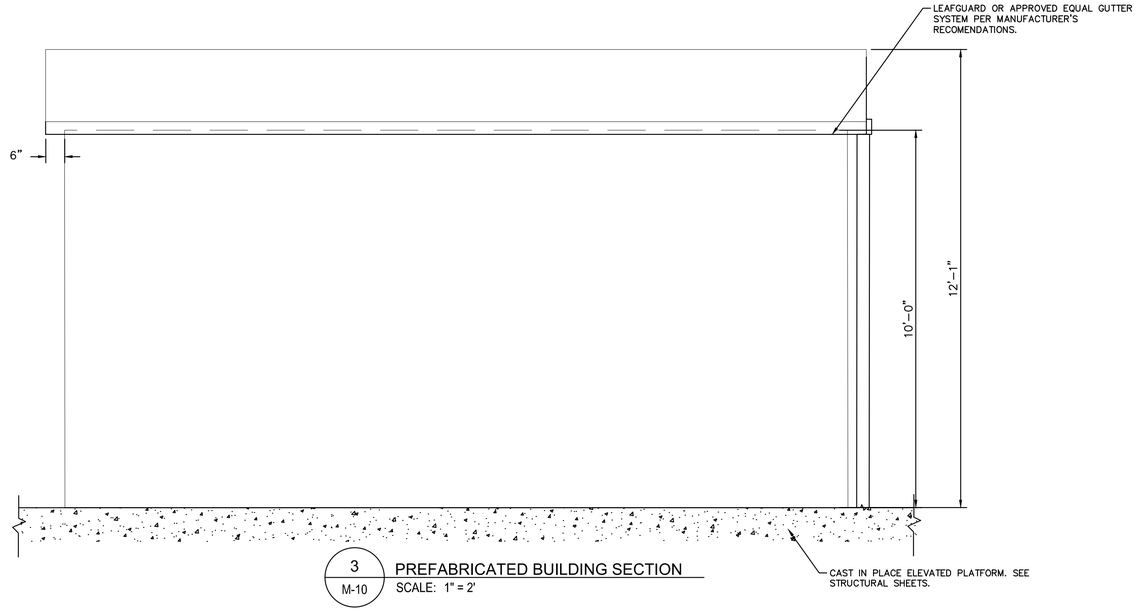

3 / M-10 PREFABRICATED BUILDING SECTION
SCALE: 1" = 2'

This document, together with the concepts and designs presented herein, as an instrument of service, is intended only for the specific purpose and client for which it was prepared. Reuse of and improper reliance on this document without written authorization and adaptation by Kimley-Horn and Associates, Inc. shall be without liability to Kimley-Horn and Associates, Inc.

No.	REVISIONS	DATE	BY

Kimley»Horn

© 2022 KIMLEY-HORN AND ASSOCIATES, INC.

100 2ND AVENUE SOUTH, SUITE 105-N, ST. PETERSBURG, FL 33701
PHONE: 727-547-3999
WWW.KIMLEY-HORN.COM REGISTRY NO. 35106

KHA PROJECT 148400067
DATE FEB 2022
SCALE AS SHOWN
DESIGNED BY MAS
DRAWN BY GMB
CHECKED BY SNR

Manatee County Florida

BAYSHORE YACHT BASIN FORCE MAIN AND LIFT STATION REPLACEMENT

MANATEE COUNTY FL

LICENSED PROFESSIONAL
MICHAEL A. SEMAGO, P.E.
FL LICENSE NUMBER 87501
DATE:

PREFABRICATED BUILDING - SECTION

SHEET NUMBER
M-11

MECHANICAL SYMBOL LIST

(NOTE: ALL OF THE SYMBOLS INDICATED BELOW MAY NOT APPEAR ON THIS PROJECT)

RL	RL	REFRIGERANT LIQUID PIPING	DB	DRY BULB TEMPERATURE
RS	RS	REFRIGERANT SUCTION PIPING	DL	DOOR LOUVER
	U	UNION	DN	DOWN
	P.D.	PIPING TEE DOWN	(E)	EXISTING
	P.U.	PIPING TEE UP	EAT	ENTERING AIR TEMPERATURE
	P.U.	PIPING ELBOW UP	EDB	ENTERING DRY BULB
	P.D.	PIPING ELBOW DOWN	°F	DEGREES FARENHEIT
		BRANCH - TOP CONNECTION	LAT	LEAVING AIR TEMPERATURE
		BRANCH - BOTTOM CONNECTION	MAX	MAXIMUM
OR		ARROW INDICATES DIRECTION OF FLOW	MBH	BRITISH THERMAL UNITS PER HOUR (THOUSANDS)
	P.O.C.	POINT OF CONNECTION - NEW ITEMS TO EXISTING ITEMS	MIN	MINIMUM
EQ #		MECHANICAL EQUIPMENT INDICATED (SEE SCHEDULE)	(N)	NEW
			S.E.E.R.	SEASONAL ENERGY EFFICIENCY RATIO
T	T.	THERMOSTAT	T	TEMPERATURE
	AFF	ABOVE FINISHED FLOOR	TYP	TYPICAL
	AFG	ABOVE FINISHED GRADE	WB	WET BULB TEMPERATURE
	BTUH	BRITISH THERMAL UNITS PER HOUR		
	CFM	CUBIC FEET PER MINUTE		

SPLIT SYSTEM SCHEDULE

CU #	OUTDOOR UNIT									FC #	INDOOR UNIT				COOLING CAPACITY	HEATING CAPACITY	ELECTRICAL
	MANUFACTURER	MODEL	AMBIENT DESIGN (°F DB/WB)	OPERATING WEIGHT (LBS)	SEER	HSPF	ELECTRICAL				MANUFACTURER	MODEL	AIRFLOW (CFM)	OPERATING WEIGHT (LBS)	TOTAL CAPACITY (MIN - MAX MBH)	TOTAL CAPACITY (MIN - MAX MBH)	
							VOLTS/Ø/Hz	MCA	MOCP								
1	MITSUBISHI	TUMYPO481AK43BA	93/77	271	22.6	12	230/1/60	29	44	1-1, 1-2	MITSUBISHI	TPKFYP024KM142A	1942	46	24-48	27-54	FED FROM CU-1

GENERAL NOTES:

1. ALL CAPACITIES LISTED ARE AT 0 FEET ELEVATION
2. PROVIDE AND INSTALL MANUFACTURER'S REFRIGERANT LINESET
3. SET FAN SPEED TO MEDIUM
4. MECHANICAL CONTRACTOR TO INSTALL WIRING FROM CUs TO FCs

STANDARD FEATURES:

1. REFRIGERANT SHALL BE R-410A
2. INVERTER VARIABLE SPEED COMPRESSOR
3. MINIMUM LINE LENGTH OF 9.8 FEET, MAX LINE LENGTH OF 49.2 FEET WITH NO ADDITIONAL REFRIGERANT REQUIRED, AND MAX ELEVATION OF 23 FEET

OPTIONS:

A. PROVIDE AND INSTALL MANUFACTURER'S PROGRAMMABLE T-STAT
B. PROVIDE MANUFACTURER'S SEACOAST COATING

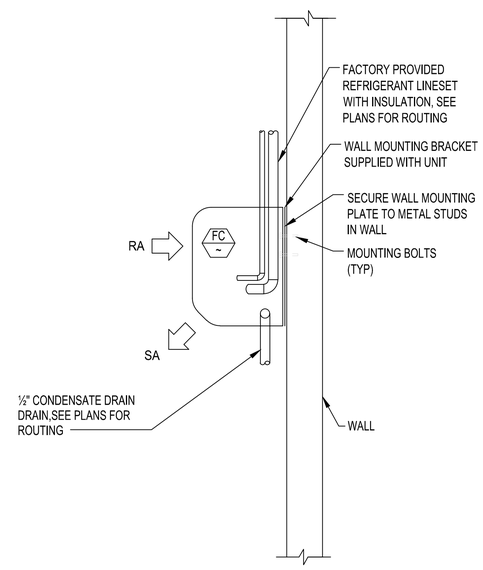

1 / M-9 INDOOR FAN COIL UNIT MOUNTING DETAIL
SCALE:NONE

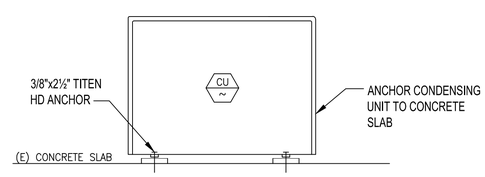

2 / M-9 CONDENSING UNIT MOUNTING DETAIL
SCALE:NONE

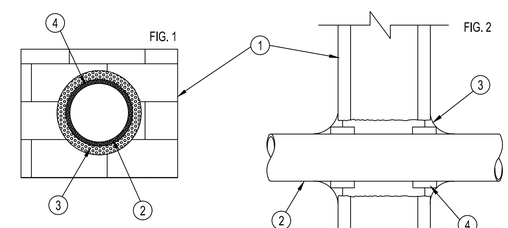

1. CONCRETE OR CONCRETE BLOCK WALL.
2. PIPING THRU WALL
3. SPECSEAL® SERIES 100 SEALANT. INSTALL 1/4" BEAD AROUND WRAP STRIP/ CONCRETE WALL AND WRAP STRIP/ INSULATION INTERSTICES. ANNULUS AFTER INSTALLATION OF WRAP STRIP(S) SHALL RANGE FROM POINT OF CONTACT TO 1/4" MAXIMUM.
4. SPECSEAL® (SSW12 OR SSWRED) WRAP STRIP. WRAP PRODUCT AROUND PIPE, SECURE STEEL TIE WIRE, AND RECESS 1-3/4" INTO WALL CAVITY. SEE FIG. 3 FOR THE NUMBER OF LAYERS REQUIRED.

3 / M-9 PIPING THRU WALL DETAIL
SCALE:NONE

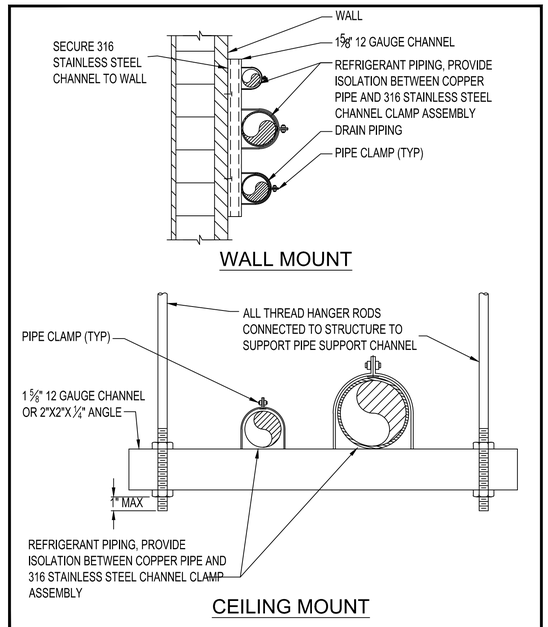

4 / M-9 LINESET SUPPORT DETAIL
SCALE:NONE

No.	REVISIONS	DATE	BY

Kimley»Horn

© 2022 KIMLEY-HORN AND ASSOCIATES, INC.

100 2ND AVENUE SOUTH, SUITE 105-N, ST. PETERSBURG, FL 33701
PHONE: 727-547-3999
WWW.KIMLEY-HORN.COM REGISTRY NO. 35106

KHA PROJECT 148400067
DATE FEB 2022
SCALE AS SHOWN
DESIGNED BY PMS
DRAWN BY GMB
CHECKED BY SNR

Manatee County FLORIDA

BAYSHORE YACHT BASIN FORCE MAIN AND LIFT STATION REPLACEMENT

MANATEE COUNTY FL

LICENSED PROFESSIONAL
PETER M. SYNTAX, P.E.
FL LICENSE NUMBER 74259
DATE:

HVAC ABBREVIATIONS AND SCHEDULES

SHEET NUMBER
M-12

This document, together with the concepts and designs presented herein, as an instrument of service, is intended only for the specific purpose and client for which it was prepared. Reuse of and improper reliance on this document without written authorization and adaptation by Kimley-Horn and Associates, Inc. shall be without liability to Kimley-Horn and Associates, Inc.

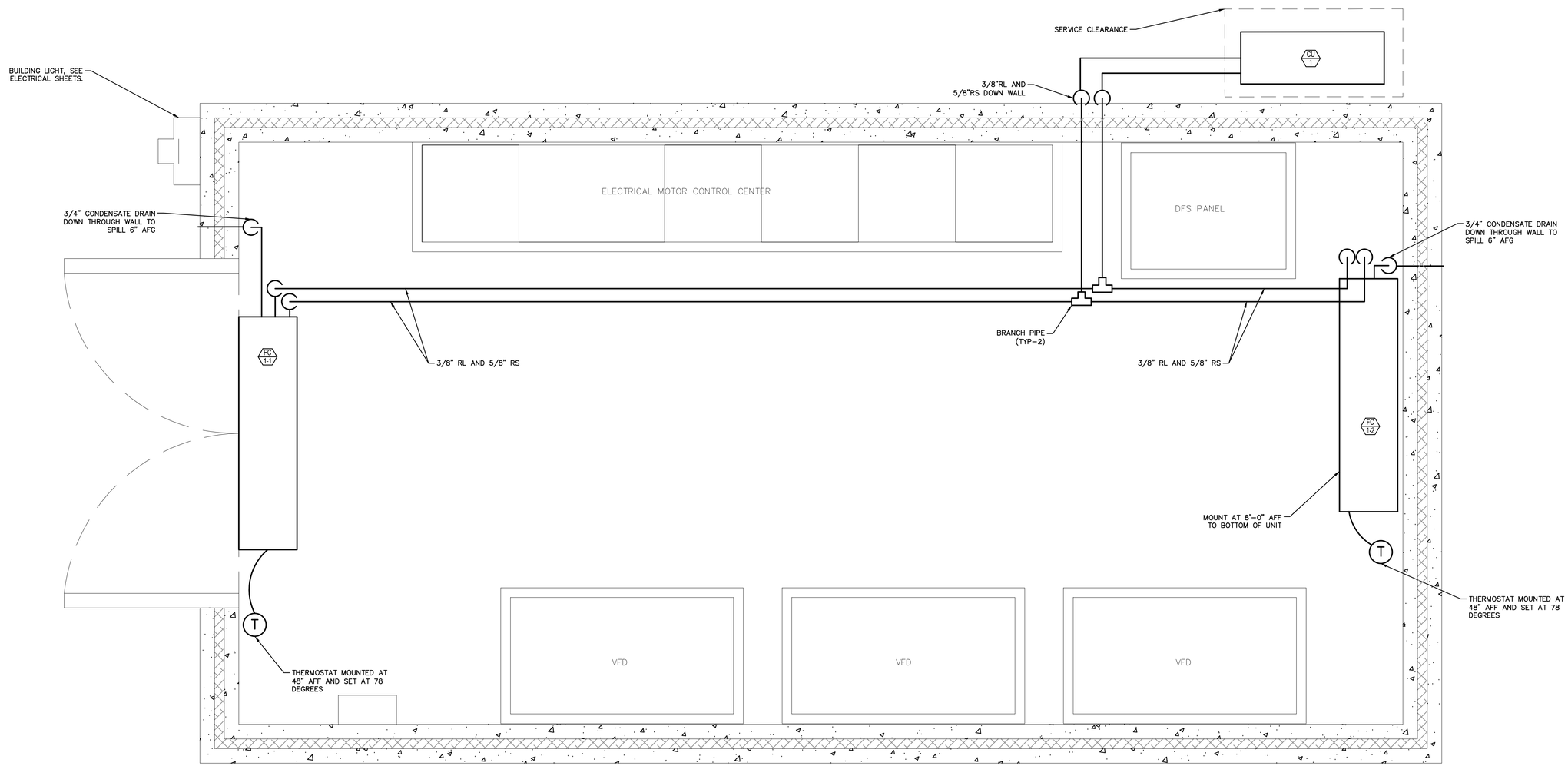

This document, together with the concepts and designs presented herein, as an instrument of service, is intended only for the specific purpose and client for which it was prepared. Reuse of and improper reliance on this document without written authorization and adaptation by Kimley-Horn and Associates, Inc. shall be without liability to Kimley-Horn and Associates, Inc.

No.	REVISIONS	DATE	BY

Kimley»Horn

© 2022 KIMLEY-HORN AND ASSOCIATES, INC.

100 2ND AVENUE SOUTH, SUITE 105-N, ST. PETERSBURG, FL 33701
PHONE: 727-547-3999
WWW.KIMLEY-HORN.COM REGISTRY NO. 35106

KHA PROJECT 148400067
DATE FEB 2022
SCALE AS SHOWN
DESIGNED BY PMS
DRAWN BY GMB
CHECKED BY SNR

Manatee County FLORIDA

BAYSHORE YACHT BASIN FORCE MAIN AND LIFT STATION REPLACEMENT

MANATEE COUNTY FL

LICENSED PROFESSIONAL

PETER M. SYNTAX, P.E.

FL LICENSE NUMBER 74259

DATE:

HVAC FLOOR PLAN

SHEET NUMBER

M-13

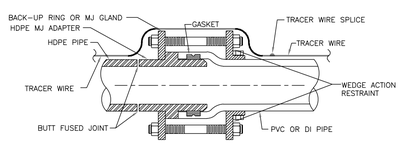

HDPE PIPE TO PVC PIPE / SPIGOT TO BELL CONNECTION

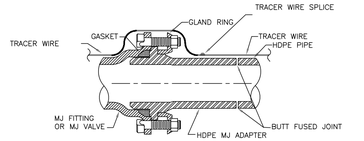

NOTE: SCHEMATIC SHOWN FOR STANDARD MJ FITTINGS AND GATE VALVES.

HDPE PIPE TO MJ FITTING TRANSITION

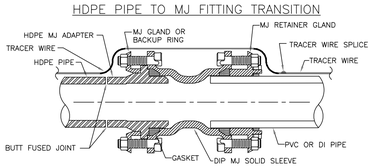

HDPE PIPE TO PVC PIPE SPIGOT TO SPIGOT CONNECTION

1. ONE TRACER WIRE SHALL BE SECURED TO THE PIPE FOR ALL TYPES OF PIPELINE INSTALLATIONS.

MANATEE COUNTY PUBLIC WORKS DEPARTMENT			HDPE TO PVC OR DI PIPE ADAPTER	UG-6
REV.BY	DATE	February 25, 2020 DATE OF APPROVAL		

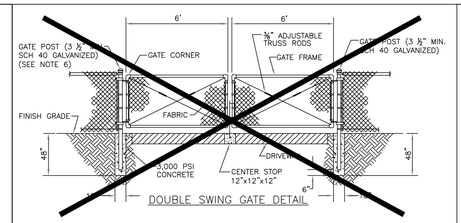

DOUBLE SWING GATE DETAIL

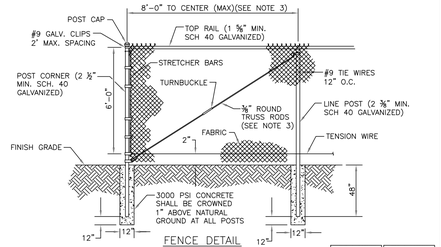

FENCE DETAIL

NOTES:

1. FENCING SHALL BE CHAIN LINK, W/ PRIVACY DECORATIVE SLATS (COLOR MATCHED).
2. CHAIN LINK FENCING SHALL BE #9 GAUGE, GALVANIZED STEEL WITH VINYL COATING (BLACK OR GREEN).
3. TRUSS BARS ON CHAIN LINK FENCES ARE REQUIRED FOR THE FIRST SPAN ON EACH SIDE OF THE CORNER POST AND FOR EACH GATE SECTION.
4. LANDSCAPE SCREENING SHALL BE LOCATED ON THE EXTERIOR OF LIFT STATION FENCING.
5. [redacted] CANTILEVER SLIDE GATES AND ROLL SLIDE GATES MEETING FDOT DESIGN STANDARDS MAY BE USED AS AN OPTION TO SWING GATES.
6. GATE POSTS AND TRACK LINE POSTS SHALL BE 4 INCH SCHEDULE 40 FOR CANTILEVER SLIDE GATES AND ROLL SLIDE GATES.

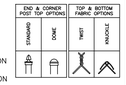

MANATEE COUNTY PUBLIC WORKS DEPARTMENT			SECURITY FENCING	US-17
REV.BY	DATE	February 25, 2020 DATE OF APPROVAL		

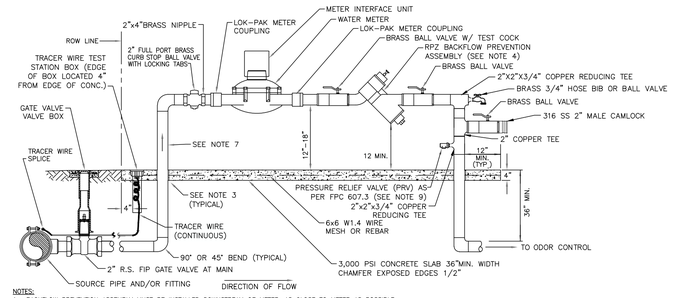

NOTES:

1. BACKFLOW PREVENTION ASSEMBLY MUST BE INSTALLED DOWNSTREAM OF METER, AS CLOSE TO METER AS POSSIBLE.
2. COPPER PIPE TYPE "L" (OR "K") OR BRASS PIPE MINIMUM SCHEDULE 40 SHALL BE USED TO A MINIMUM DEPTH OF 36" BELOW GRADE.
3. PIPES THROUGH SLAB AND ALL BELOW-GROUND D.I. PIPE AND FITTINGS SHALL BE POLYETHYLENE WRAPPED.
4. THE SYSTEM MUST MEET ALL REQUIREMENTS OF THE FLORIDA PLUMBING CODE (LATEST EDITION) AND CHAPTER 2-31, ARTICLE X OF THE MANATEE COUNTY CODE OF ORDINANCES.
5. METER, LOCK PACKS AND BRASS NIPPLES WILL BE PROVIDED BY MANATEE COUNTY. INSERT NIPPLES INTO LOCK PACKS HALF WAY.
6. DO NOT PAINT METER OR LOCK PACKS. ALL ABOVE GROUND PIPING SHALL BE PAINTED SAFETY BLUE BY SCOTT PAINT (POTABLE WATER) OR PANTONE PURPLE 522C (RECLAIMED WATER).
7. PRESSURE REDUCING VALVE IS REQUIRED UPSTREAM OF BACKFLOW PREVENTION ASSEMBLY, IF SYSTEM PRESSURE EXCEEDS 80 PSI.
8. 3" MINIMUM CLEARANCE FROM LANDSCAPING PLANTS AND 10' MIN. CLEARANCE FROM TREES TO EDGE OF CONCRETE SLAB AND CLEAR OPENING FOR ACCESS FROM STREET.
9. IN ADDITION TO THE PRV, THE BUILDING DEPT. MAY REQUIRE AN APPROVED DEVICE FOR THERMAL EXPANSION CONTROL DOWNSTREAM OF THE ASSEMBLY.
10. BACKFLOW PREVENTION ASSEMBLY IS ONLY REQUIRED ON RECLAIMED WATER LINE WHEN IRRIGATION SYSTEM INCLUDES CHEMICAL OR FERTILIZER INJECTION METHODS. WHEN BACKFLOW PREVENTION ASSEMBLY IS NOT REQUIRED, A 12" MINIMUM NIPPLE AND A BALL VALVE SHALL BE INSTALLED.
11. ALL ABOVE-GROUND ANCILLARY BOLTS, NUTS, WASHERS, & FASTENERS SHALL BE 316 STAINLESS STEEL. ALL BURIED SHALL BE MIN. 304 STAINLESS STEEL.
12. FITTINGS AND CONNECTION FOR ABOVE-GROUND INSTALLATIONS SHALL NOT ALLOW ANY MOVEMENT OR ROTATION OF THE BACKFLOW PREVENTION ASSEMBLIES.
13. SEE UW-2 GATE VALVE, BOX, LID AND TAG DETAIL. CENTERING COLLAR NOT REQUIRED ON 2" OR SMALLER VALVES.
14. BACKFLOW PREVENTION ASSEMBLIES USED FOR POTABLE APPLICATIONS SHALL BE LEAD FREE AS DEFINED IN THE REDUCTION OF LEAD IN DRINKING WATER ACT, SECTION 1417 OF THE SAFE DRINKING WATER ACT, 42 U.S.C. 300g-6, AS MAY BE AMENDED, AND IN COMPLIANCE WITH ALL APPLICABLE REGULATIONS.
15. FOR USE WHERE BACKFLOW PREVENTION ASSEMBLY IS REQUIRED WITH METER.
16. WHERE MULTIPLE METER AND BACKFLOW PREVENTION ASSEMBLIES ARE INSTALLED, A BELOW GRADE ISOLATION VALVE SHALL BE PROVIDED FOR EACH ASSEMBLY.

2" WATER METER AND BACKFLOW PREVENTION ASSEMBLY FOR LIFT STATIONS DETAIL (3 / M-1)

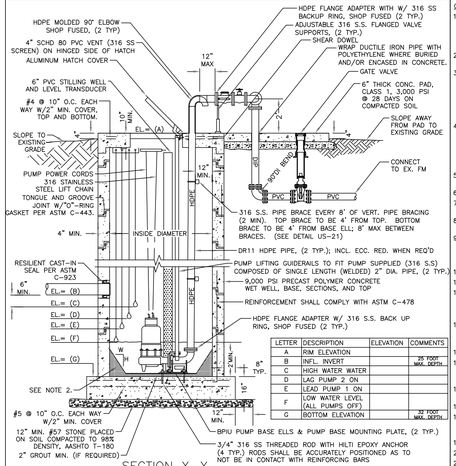

LETTER	DESCRIPTION	ELEVATION	COMMENTS
A	RIM ELEVATION		
B	INFL. INVERT		36 FOOT MAX. DEPTH
C	HIGH WATER WATER		
D	LAG PUMP 2 ON		
E	LEAD PUMP 1 ON		
F	LOW WATER LEVEL (ALL PUMPS OFF)		
G	BOTTOM ELEVATION		32 FOOT MAX. DEPTH

SECTION X-X

1. 6" MINIMUM VERTICAL SPACING BETWEEN ALL PUMP AND ALARM CONTROL LEVELS.
2. POLYMER CONCRETE FILLET ALL AROUND WET WELL: 6-FT DIA.=12"H x 6"W; 8-FT DIA. & GREATER=18"H x 12"W.
3. THE VALVE CONCRETE PAD SHALL BE GIVEN A BROOM FINISH. THE SURFACE VARIATIONS SHALL BE NOT MORE THAT 1/4" UNDER A TEN FOOT (10') STRAIGHT EDGE, NOT MORE THAN 1/8" ON A FIVE FOOT (5') TRANSVERSE SECTION. THE EDGE OF THE CONCRETE PAD SHALL BE CAREFULLY FINISHED WITH A EDGING TOOL HAVING A RADIUS OF 1/2".
4. EXPANSION JOINT: EXPANSION JOINTS BETWEEN THE CONC. PAD AND THE WET WELL SHALL BE 1/2" MATERIAL AND SHALL MEET THE REQUIREMENTS OF AASHTO M153 OR AASHTO M213.
5. THIS DETAIL SHALL APPLY TO LIFT STATIONS WITH 4" OR GREATER FORCE MAINS. LIFT STATIONS WITH FORCE MAINS LESS THAN 4" REFER TO DETAIL US-27A.

MANATEE COUNTY PUBLIC WORKS DEPARTMENT			SEWAGE LIFT STATION SECTION VIEW	US-19
REV.BY	DATE	February 25, 2020 DATE OF APPROVAL		

GENERAL LIFT STATION NOTES:

1. ALL ACCESS COVERS SHALL BE ALUMINUM, WITH 316 STAINLESS STEEL HARDWARE AND RATED FOR 300 P.S.F. LOADING. ALL ALUMINUM SURFACES IN CONTACT WITH CONCRETE SHALL HAVE 2 COATS BITUMASTIC EPOXY, TOTAL 16 MILS DFT. ALL ACCESS COVERS SHALL BE EQUIPPED WITH A LOCKING STAPLE OR BAR FOR USE WITH A PADLOCK. PADLOCKS FOR WETWELL, FENCE GATE AND CONTROL PANELS OF PUBLICLY OWNED & MAINTAINED LIFT STATIONS SHALL BE FURNISHED BY THE MANATEE COUNTY UTILITIES DEPARTMENT, UPON ACCEPTANCE.
2. INSTALL WET WELL VENT ON THE HINGED SIDE OF THE WET WELL HATCH COVER, BETWEEN DISCHARGE PIPING AND MATCH HEIGHT.
3. GROUND SHALL BE SLOPED AWAY FROM SLAB TO NATURAL GROUND ELEVATION IN ALL DIRECTIONS. A 4-INCH REVEAL SHALL BE PROVIDED AROUND THE STRUCTURES. SITE SHALL INCLUDE A WEED BARRIER FABRIC THAT IS COVERED WITH WASHED SHELL OR ROCK WITHIN LIFT STATION FENCING; SITE SHALL INCLUDE A WEED BARRIER FABRIC THAT IS COVERED WITH SHREDDED WOOD TYPE MULCH UNDER THE SHRUBS AND UP TO OUTSIDE OF THE FENCE. WEED BARRIER FABRIC THAT IS COVERED WITH SHREDDED WOOD-TYPE MULCH SHALL BE LOCATED UNDER THE TREES FOR A MINIMUM DISTANCE OF 3 FEET FROM THE TREE. SODDING OR SHREDDED WOOD-TYPE MULCH SHALL BE INSTALLED ON THE REMAINDER OF THE SITE TO THE EDGE OF THE EASEMENT.
4. ALL FORCE MAIN PIPING AND FITTINGS FROM THE PUMP BASE ELBOW IN THE WETWELL UP TO THE CHECK VALVE IN THE ABOVE GROUND VALVE ASSEMBLY, SHALL BE DR11 HDPE. THE HDPE FITTINGS SHALL BE MOLDED FITTINGS. ALL CONNECTIONS TO IRON BODIED FLANGE FITTINGS IN THE WETWELL (PUMP BASE ELLS) AND TO THE CHECK VALVES SHALL BE MADE USING HDPE FLANGE ADAPTERS WITH 316 STAINLESS STEEL BACKUP RINGS. ALL HDPE CONNECTIONS SHALL BE THERMAL FUSED. ALL PIPING DOWNSTREAM OF THE VALVE ASSEMBLY TO THE FIRST BURIED FITTING SHALL BE DUCTILE IRON PIPE (CL-53), THEN PVC (DR18).
5. ALL PIPING BELOW GROUND SHALL BE COLOR CODED IN ACCORDANCE WITH THESE STANDARDS. GREEN-RAW SEWAGE; PURPLE-RECLAIMED; BLUE-POTABLE WATER.
6. ANCHORS & LIFTING DEVICES SHALL NOT PENETRATE THE WALLS OF THE WET WELL.
7. ALL TOP, SECTIONS, AND BASE SHALL BE PRECAST POLYMER CONCRETE, MIN. 9,000 PSI COMPRESSIVE STRENGTH. SEE PRECAST POLYMER CONCRETE SANITARY SEWER MANHOLE FOR TURBULENT FLOW DETAIL.
8. ALL ABOVE-GROUND METAL APPURTENANCES INCLUDING BOLTS, NUTS AND WASHERS SHALL BE 316 STAINLESS STEEL. ALL STAINLESS STEEL BOLTS SHALL BE TREATED WITH NOVER-SEIZE PRIOR TO ASSEMBLY.
9. VERTICAL HDPE PUMP DISCHARGE PIPE IN THE WET WELL SHALL BE BRACED PER DETAIL US-21. THE PIPE SHALL BE CLAMPED TO A SINGLE LENGTH OF 2" 316 SS TUBING (OR 2" 316 SS ANGLE) INSTALLED HORIZONTALLY. THE TUBE SHALL HAVE 6"X6"X¼" PLATES WELDED TO EACH END AND ATTACH TO THE WALL BY 316 SS ANCHORS. THE PIPE SHALL BE CLAMPED TO THE TUBING WITH CUSHIONED 316 SS U-BOLTS.
10. CONTRACTOR SHALL TAKE ALL NECESSARY PRECAUTIONS TO PREVENT FLOTATION.
11. TOP OF WET WELL AND VALVE ASSEMBLY SLAB SHALL BE AT THE SAME ELEVATION.
12. THE EXTERIOR SURFACES OF THE CONCRETE WET WELL AND VALVE ASSEMBLY PAD EXPOSED ABOVE GRADE SHALL BE COATED WITH A LEAST TWO COATS OF H&C SILICONE ACRYLIC CONCRETE STAIN, PATIO GREEN, MANUFACTURED BY FLR PAINTS, INC. ABOVE GROUND VALVE ASSEMBLY & PIPING SHALL BE PAINTED, RUSTOLEUM 7538 HUNTER GREEN. CONTRACTOR SHALL TAKE PRECAUTIONS TO AVOID OVER-SPRAY ONTO THE VALVE ASSEMBLY CONCRETE PAD.
13. FOR 5/8" WATER METER, PROVIDE POTABLE WATER SERVICE CONNECTION WITH 3/4" BRASS HOSE BIB. PROVIDE AN APPROVED BACKFLOW PREVENTION ASSEMBLY INSTALLED AT THE ROW. ALL WATER SERVICE PIPING FROM WATER METER TO BE TYPE "K" COPPER OR BRASS; 3/4" MIN. DIAMETER FOR 5/8" METER AND 2" MIN. DIAMETER PIPING FOR 2" METER.
14. LANDSCAPING SHALL BE IRRIGATED WITH NON-POTABLE WATER. A RAIN SENSOR SHALL BE FURNISHED AND INSTALLED.
15. HOSE BIB TO BE A MINIMUM OF 6 FEET FROM THE ELECTRICAL CONTROL PANEL, 24" ABOVE THE SURROUNDING FINISH GRADE, AND ANCHORED TO A 4" PVC CONCRETE FILLED PIPE. EXACT LOCATION TO BE DETERMINED IN THE FIELD W/COUNTY PERSONNEL.
16. WATER METER ASSEMBLY TO BE INSTALLED BY CONTRACTOR AS PART OF WATER SERVICE CONNECTION WITH FEES PAID BY THE DEVELOPER.
17. BASE AND FIRST WALL SECTION OF WET WELL SHALL BE MONOLITHIC.
18. EVERY EFFORT SHALL BE MADE BY THE CONTRACTOR TO CONSTRUCT WATERTIGHT STRUCTURES WITH NO VISIBLE LEAKS. COMPLETED STRUCTURES THAT ARE NOT WATERTIGHT AND/OR DO NOT MEET THE REQUIREMENTS OF ASTM C-443 WILL BE REJECTED.
19. FLEXIBLE GASKET CONNECTORS SHALL MEET THE REQUIREMENTS OF ASTM C-923 LATEST REVISION.
20. ALL GATE VALVES SHALL BE RESILIENT SEAT NON-RISING STEM TYPE IN ACCORDANCE WITH THESE STANDARDS.
21. ELECTRICAL SERVICE SHALL BE 3 PHASE MINIMUM, UNLESS THE ELECTRICAL UTILITY PROVIDES CORRESPONDENCE STATING THAT 3 PHASE SERVICE IS UNAVAILABLE.
22. ELECTRICAL CONDUIT SHALL BE RUN BY THE SHORTEST ROUTE POSSIBLE FROM THE ELECTRICAL SOURCE TO THE CONTROL PANEL AND FROM THE CONTROL PANEL TO THE LIFT STATION WET WELL.
23. A FLOW METER AND EMERGENCY BACKUP PUMP SHALL BE REQUIRED FOR ALL LIFT STATIONS THAT MEET THE CRITERIA LISTED IN SECTION 1.14.14 OF THE PUBLIC WORKS UTILITY STANDARDS MANUAL.
24. THE CONTROL PANEL, HOSE BIB, EMERGENCY BACKUP PUMP, FUEL STORAGE TANK AND ANTENNA SHALL NOT BE LOCATED BETWEEN THE WET WELL, VALVE ASSEMBLY AND THE DRIVEWAY. THE PUMP SHALL NOT BE LOCATED WITHIN 25 FEET OF THE EDGE OF THE LIFT STATION EASEMENT AT THE ROW LINE.
25. THE ANTENNA FOR THE RADIO TELEMETRY UNIT REQUIRES DIRECT LINE-OF-SIGHT SIGNALING CAPABILITY TO THE UTILITIES DEPARTMENT'S OFFICE THAT WILL RECEIVE THE SIGNAL. THERE SHALL BE AN UNOBSTRUCTED HORIZONTAL ANGLE OF FIFTEEN (15) DEGREES FROM THE ANTENNA MAST (7.5 DEGREES ON BOTH SIDES OF THE DIRECT LINE-OF-SIGHT AZIMUTH). NO TREE SHALL BE PLANTED WITHIN THE DESIGNATED UNOBSTRUCTED ANGLE FOR A TWENTY (20) FEET HORIZONTAL DISTANCE MEASURED FROM THE MAST. LANDSCAPE BUFFER PLANTINGS ARE TO BE FIELD ADJUSTED IN COORDINATION WITH THE LOCATION OF THE CONSTRUCTED TELEMETRY ANTENNA. THE ANTENNA TOWER/MAST SHALL BE TO THE LEFT OF THE CONTROL PANEL.

MANATEE COUNTY PUBLIC WORKS DEPARTMENT			LIFT STATION NOTES	US-20
REV.BY	DATE	February 25, 2020 DATE OF APPROVAL		

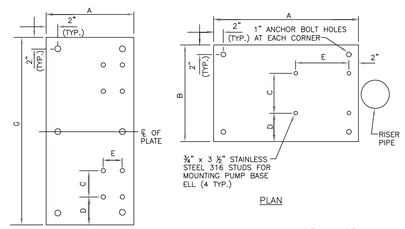

PLAN FOR PUMPS 2" AND SMALLER

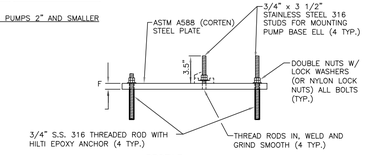

PROFILE

PUMP BASE ELL MOUNTING PLATE DIMENSIONS							
DIMENSIONS	A	B	C	D	E	F	G
FOR 6" PUMPS	24"	20"	8.25"	5.875"	11"	¾"	N/A
FOR 4" PUMPS	20"	16"	6"	5"	10"	½"	N/A
2" PUMPS & SMALLER	15"	N/A	4.5"	4.75"	3.25"	½"	32"

NOTES:

1. INSTALL DOUBLE NUTS (OR NYLON LOCK NUTS) ON ALL EIGHT (8) THREADED RODS.
2. THE PLATE EDGES AND ALL HOLES SHALL BE GROUND SMOOTH TO REMOVE ALL BURRS.
3. DIMENSIONS "C" & "E" ARE FOR BARNEY'S PUMPS, INC. BASE ELLS.
4. FOR PUMPS WITH A 2-INCH DISCHARGE OR LESS, A SINGLE BASE PLATE SHALL BE INSTALLED UNDER BOTH GRINDER PUMPS.

MANATEE COUNTY PUBLIC WORKS DEPARTMENT			PUMP BASE ELL MOUNTING PLATE	US-22
REV.BY	DATE	February 25, 2020 DATE OF APPROVAL		

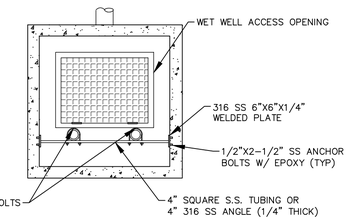

RISER PIPE BRACING DETAIL (3 / M-3)

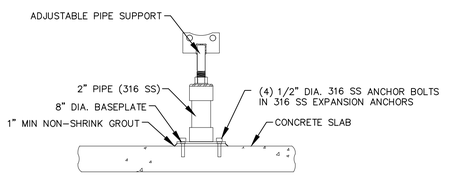

FLANGE PIPE SUPPORT DETAIL (2 / M-4)

This document, together with the concepts and designs presented herein, as an instrument of service, is intended only for the specific purpose and client for which it was prepared. Reuse of and improper reliance on this document without written authorization and adaptation by Kimley-Horn and Associates, Inc. shall be without liability to Kimley-Horn and Associates, Inc.

No.	REVISIONS	DATE	BY

Kimley»Horn

© 2022 KIMLEY-HORN AND ASSOCIATES, INC.

100 2ND AVENUE SOUTH, SUITE 105-N, ST. PETERSBURG, FL 33701
PHONE: 727-547-3999
WWW.KIMLEY-HORN.COM REGISTRY NO. 35106

KHA PROJECT 148400067
DATE FEB 2022
SCALE AS SHOWN
DESIGNED BY MAS
DRAWN BY GMB
CHECKED BY SNR

Manatee County FLORIDA

BAYSHORE YACHT BASIN FORCE MAIN AND LIFT STATION REPLACEMENT

MANATEE COUNTY FL

LICENSED PROFESSIONAL
MICHAEL A. SEMAGO, P.E.
FL LICENSE NUMBER 87501
DATE:

MECHANICAL DETAILS

SHEET NUMBER
M-14

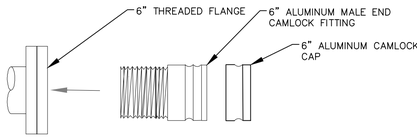

6" CAMLOCK CONNECTION DETAIL (1 / M-3)

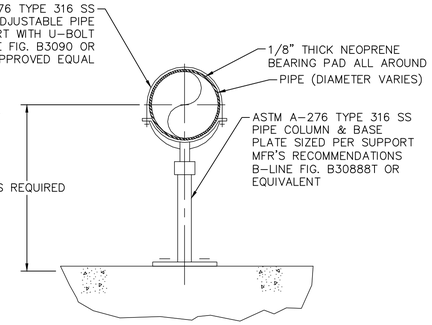

SADDLE PIPE SUPPORT (2 / M-3)

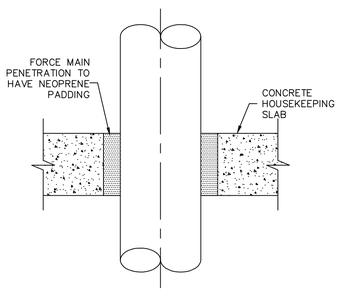

HOUSEKEEPING PAD PENETRATION DETAIL (3 / M-3)

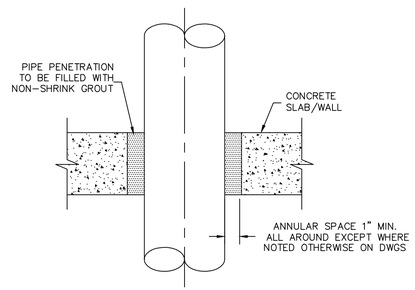

WALL/SLAB PENETRATION DETAIL (4 / M-3)

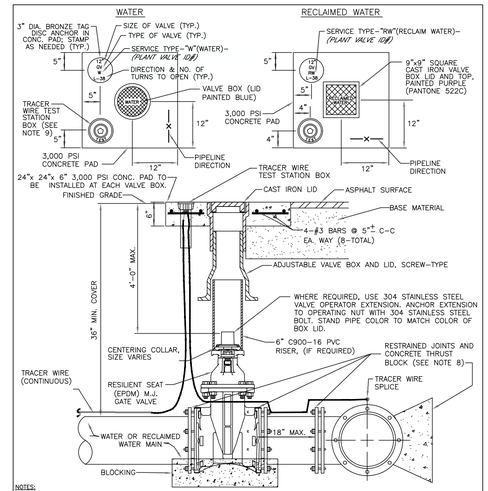

NOTES:

1. "WV" OR "RWV" TO BE IMPRESSED INTO THE NEWLY-POURED CONCRETE CURB, ALONG WITH DISTANCE IN FEET TO THE VALVE. IF NO CURB, INSTALL A BLUE DISC WITH "WV" OR PURPLE DISC WITH "RWV" USING A 1/8" x 1" GALVANIZED STEEL SCREW IN THE EDGE OF PAVEMENT WITH THE FOOTAGE FROM THE DISC TO THE VALVE.
2. ALL EXISTING AND PROPOSED VALVE BOXES SHALL BE ADJUSTED TO FINISHED GRADES AS DETERMINED IN THE FIELD.
3. VALVES SHALL NOT BE PLACED IN HANDICAPPED RAMPS, CURBS, OR GUTTERS.
4. PRECAST CONCRETE PADS SHALL NOT BE USED.
5. ALL EXPOSED EDGES OF CONCRETE SHALL BE CHAMFERED 1/2".
6. PIPELINE DIRECTION TO BE IMPRESSED INTO NEWLY POURED CONCRETE PAD.
7. TRACER WIRE TEST STATION BOX IS NOT REQUIRED IN VALVE BOX PAD IF THE GATE VALVE IS LOCATED WITHIN 200 FEET OF A WATER SERVICE, BLOW-OFF, BACKFLOW PREVENTER OR FIRE HYDRANT THAT HAS A TRACER WIRE BOX.
8. WHERE THRUST BLOCK NOT USED, RESTRAINED JOINTS MUST THEN EXTEND FROM TEE FULL LENGTH SPECIFIED FOR "TEES."
9. USE NON-TRAFFIC RATED BOXES FOR NORMAL YARD SERVICE. WHERE VALVE WILL BE IN STREET OR PARKING UNDER VEHICLE TRAFFIC, USE TRAFFIC RATED BOXES. WHERE POSSIBLE, LOCATE TRACE WIRE TESTING STATION OUTSIDE OF TRAVEL LANE OR IN MEDIAN, CENTERED IN SEPARATE CONCRETE PAD SIMILAR TO STANDARD VALVE BOX PAD.
10. THE BRASS TAG SHALL HAVE A "PLANT VALVE ID#" WHEN VALVES ARE INSTALLED WITHIN THE COUNTY TREATMENT PLANT LIMITS. THE PLANT VALVE ID# SHALL BE SHOWN ON THE CONSTRUCTION PLANS AND RECORD DRAWINGS.
11. REFER TO SECTION 1.11 GATE VALVES IN THE PUBLIC WORKS UTILITY STANDARDS MANUAL FOR FURTHER DETAILS.

MANATEE COUNTY PUBLIC WORKS DEPARTMENT			
REV.BY	DATE	February 25, 2020 DATE OF APPROVAL	GATE VALVE, BOX, LID AND TAG	UW-2

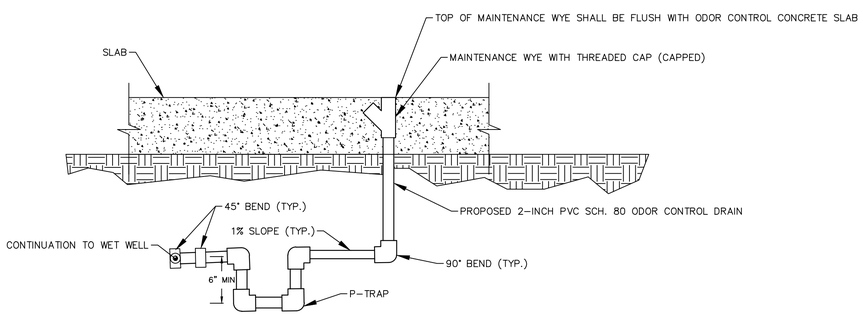

P-TRAP/MAINTENANCE WYE DETAIL (5 / M-3)

This document, together with the concepts and designs presented herein, as an instrument of service, is intended only for the specific purpose and client for which it was prepared. Reuse of and improper reliance on this document without written authorization and adaptation by Kimley-Horn and Associates, Inc. shall be without liability to Kimley-Horn and Associates, Inc.

No.	REVISIONS	DATE	BY

Kimley»Horn

© 2022 KIMLEY-HORN AND ASSOCIATES, INC.

100 2ND AVENUE SOUTH, SUITE 105-N, ST. PETERSBURG, FL 33701
PHONE: 727-547-3999
WWW.KIMLEY-HORN.COM REGISTRY NO. 35106

KHA PROJECT 148400067
DATE FEB 2022
SCALE AS SHOWN
DESIGNED BY MAS
DRAWN BY GMB
CHECKED BY SNR

Manatee County FLORIDA

BAYSHORE YACHT BASIN FORCE MAIN AND LIFT STATION REPLACEMENT

MANATEE COUNTY FL

LICENSED PROFESSIONAL
MICHAEL A. SEMAGO, P.E.
FL LICENSE NUMBER 87501
DATE:

MECHANICAL DETAILS

SHEET NUMBER
M-15

This document, together with the concepts and designs presented herein, as an instrument of service, is intended only for the specific purpose and client for which it was prepared. Reuse of and improper reliance on this document without written authorization and adaptation by Kimley-Horn and Associates, Inc. shall be without liability to Kimley-Horn and Associates, Inc.

STRUCTURAL NOTES

1. GENERAL:

A) PROTECT EXISTING FACILITIES, STRUCTURES AND UTILITY LINES FROM ALL DAMAGE. PROTECT THE WORK, ADJACENT PROPERTY, AND THE PUBLIC. CONTRACTOR IS SOLELY RESPONSIBLE FOR DAMAGE OR INJURY DUE TO HIS ACT OR NEGLECT.

B) THE CONTRACTOR IS SOLELY RESPONSIBLE FOR JOB SAFETY AND CONSTRUCTION PROCEDURES.

C) PRIOR TO CONSTRUCTION, FIELD VERIFY ALL DIMENSIONS IN THE DRAWINGS AND DETAILS AND REPORT ANY DISCREPANCIES IMMEDIATELY TO THE ENGINEER.

D) REFER TO THE ENGINEER FOR INSTRUCTION FOR ANY DIMENSION NOT GIVEN ON DRAWINGS. SCALING OF DRAWINGS SHALL NOT BE USED TO OBTAIN OR VERIFY ANY DIMENSION SHOWN ON THE DRAWINGS.

E) CONTRACTOR IS RESPONSIBLE FOR HIRING GEOTECHNICAL CONSULTANT FOR CONSTRUCTION TESTING AND APPROVAL OF FILL AND COMPACTION.

F) CONTRACTOR SHALL BE RESPONSIBLE FOR DEWATERING FOR FOUNDATION CONSTRUCTION, IF REQUIRED.

2. CONCRETE:

A) ALL CONCRETE MATERIALS, PLACING AND HANDLING SHALL BE IN ACCORDANCE WITH THE LATEST EDITION OF ACI 318 AND ACI 301.

B) STRUCTURAL CONCRETE SHALL HAVE THE FOLLOWING MINIMUM 28-DAY COMPRESSIVE STRENGTHS:
1. ELEVATED PLATFORM, INCLUDING MAT FOUNDATION AND COLUMNS — 4000 PSI
2. WET WELL, INCLUDING TOP SLAB — 5000 PSI
3. SLAB-ON-GRADE — 4000 PSI

C) PROVIDE 2" CONCRETE COVER OVER REINFORCING BARS ADJACENT TO FORMS AND 3" CONCRETE COVER ADJACENT TO EARTH EXCEPT AS OTHERWISE NOTED.

D) FORM TIES AND REINFORCING BAR SUPPORTS SHALL BE OF NON-CORROSIVE MATERIAL INCLUDING, BUT NOT LIMITED TO, FIBERGLASS, PLASTIC, AND/OR CONCRETE BLOCK.

E) CONCRETE FINISHES: FORMED SURFACE-SMOOTH FORM FINISH PER ACI 301 AND BROOM FINISH: HORIZONTAL SLAB SURFACES

F) ALL GROUT SHALL BE NON-SHRINK, NON-METALLIC.

G) CONCRETE SHALL BE CURED IMMEDIATELY AFTER FINISHING OPERATIONS IN ACCORDANCE WITH ONE OF THE FOLLOWING METHODS:
1. APPLY A LIQUID MEMBRANE CHEMICAL CURING COMPOUND IN ACCORDANCE WITH ASTM C-309.
2. WET CURE IN ACCORDANCE WITH ACI 301.

H) ALL CONCRETE CONSTRUCTION SHALL BE DONE IN THE DRY.

I) BEAMS AND SLABS SHALL BE POURED MONOLITHICALLY.

J) CONCRETE SHALL BE IN ACCORDANCE WITH ASTM C94:
1. TYPE II PORTLAND CEMENT - ASTM C150
2. AGGREGATES (3/4" MAX.) - ASTM C33
3. USE OF CALCIUM CHLORIDE IS NOT PERMITTED
4. AIR ENTRAINING (4% MAX.) - ASTM C260
5. WATER REDUCING - ASTM C494
6. FLY ASH (MAX 20% BY WEIGHT), TYPE F - ASTM C618
7. WATER - CLEAN AND POTABLE
8. MAXIMUM WATER CEMENT RATIO FOR 4,000 PSI, 28-DAY COMPRESSIVE STRENGTH = 0.45

K) REQUIRED SLUMP: 2" TO 4"

L) CONTRACTOR IS RESPONSIBLE FOR THE PROPER DESIGN AND CONSTRUCTION OF ALL FORMWORK AND SHORING. DESIGN SHALL BE PERFORMED BY A LICENSED FLORIDA PROFESSIONAL ENGINEER.

M) A QUALIFIED TESTING LABORATORY SHALL BE RETAINED TO PERFORM THE FOLLOWING CONCRETE TESTS:
1. CYLINDER STRENGTH TESTS - ASTM C39. ONE SET OF FIVE CYLINDERS FOR EACH 50 CUBIC YARDS OR FRACTION THEREOF PLACED. TEST ONE AT 3 DAYS, ONE AT 7 DAYS, TWO AT 28 DAYS, AND HOLD ONE.
2. SLUMP TESTS - ASTM C143

N) ONE COPY OF ALL TEST REPORTS SHALL BE SENT DIRECTLY TO OWNER, ENGINEER, AND CONTRACTOR.

O) CONCRETE SHALL BE PLACED WITHIN 90 MINUTES OF BATCH TIME

P) ALL CONCRETE SHALL BE CONSOLIDATED IN PLACE USING INTERNAL VIBRATORS

Q) SUBMITTALS:
1. SUBMIT PROPOSED CONCRETE MIX DESIGN PRIOR TO CONSTRUCTION
2. SUBMIT DETAILED SHOP DRAWINGS OF REINFORCING BARS SHOWING NUMBER, SIZE, AND LOCATION. INCLUDE BAR LISTS AND BEND DIAGRAMS.

3. REINFORCEMENT:

A) REINFORCING STEEL SHALL BE A.S.T.M. A-615 WITH SUPPLEMENT, GRADE 60: MINIMUM WORKING STRESS - 24,000 PSI.

B) ALL REINFORCING SHALL BE UNCOATED (BLACK).

C) ALL DIMENSIONS PERTAINING TO LOCATION OF REINFORCING BARS ARE TO CENTERLINE BARS EXCEPT WHERE THE CLEAR DIMENSION IS SHOWN TO FACE OF CONCRETE.

D) ACI STANDARD HOOKS SHALL BE USED UNLESS OTHERWISE NOTED.

E) ALL LAP SPLICE LENGTHS SHALL BE IN ACCORDANCE WITH THE LATEST EDITION OF ACI 318 AND CRSI STANDARD PRACTICES FOR CLASS 'B' SPLICES, EXCEPT AS OTHERWISE NOTED.

4. FOUNDATIONS:

A) GEOTECHNICAL REPORTS OF SUBSURFACE CONDITIONS HAVE BEEN PREPARED BY ARDAMAN & ASSOCIATES (DATED MARCH 17, 2021 AND JUNE 21, 2021, FILE NO. 20-7220). ANY ADDITIONAL GEOTECHNICAL WORK REQUIRED WILL BE THE RESPONSIBILITY OF THE CONTRACTOR.

B) NOTIFY THE ENGINEER IMMEDIATELY OF ANY EXISTING FOUNDATION CONDITIONS OR DETAILS THAT ARE IN CONFLICT WITH THOSE INDICATED AND SHOWN IN THE DRAWINGS.

C) ADHERE TO THE SITE PREPARATION RECOMMENDATIONS MADE IN THE ENGINEERING EVALUATION AND RECOMMENDATIONS SECTION OF THE JUNE 21, 2021 GEOTECHNICAL REPORT.

D) FOUNDATION HAS BEEN DESIGNED BASED ON A MAXIMUM ALLOWABLE SOIL BEARING CAPACITY OF 1,700 PSF.

5. STRUCTURAL ALUMINUM:

A) STRUCTURAL ALUMINUM SHALL BE DOMESTIC ALLOY 6061-T6.

B) ALUMINUM WORK SHALL BE IN ACCORDANCE WITH THE ALUMINUM ASSOCIATION'S SPECIFICATIONS FOR ALUMINUM STRUCTURES, LATEST EDITION.

C) FASTENERS: UNLESS NOTED OTHERWISE, ALL FASTENERS SHALL BE 316 STAINLESS STEEL MEETING THE REQUIREMENTS OF ASTM F593 OR ASTM A193 FOR BOLTS AND ASTM F594 OR ASTM A194 FOR NUTS. ALL CONNECTIONS WITH DISSIMILAR MATERIALS (E.G. 316 STAINLESS STEEL TO ALUMINUM) SHALL RECEIVE NEOPRENE OR VINYL WASHER. WASHER SHALL BE LARGER THAN BOLT HEAD.

D) ALL WELDING SHALL CONFORMS WITH AWS D1.2, LATEST STRUCTURAL WELDING CODE - ALUMINUM.

E) ALL FILLET WELDS SHALL HAVE A MINIMUM SIZE OF 1/4" WITH 5356 FILLER ALLOY UNLESS OTHERWISE NOTED.

F) PROVIDE NON-SLIP ALUMINUM STAIR TREADS WITH A MINIMUM LIVE LOAD CAPACITY OF 100 PSF.

G) PROVIDE SHOP DRAWINGS FOR ALUMINUM STAIRS AND FRAMING PRIOR TO FABRICATION AND INSTALLATION.

H) WHERE THE CONTACT OF DISSIMILAR MATERIALS MAY CAUSE ELECTROLYSIS OR WHERE ALUMINUM WILL COME IN CONTACT WITH CONCRETE, MORTAR, OR PLASTER, THE CONTACT SURFACE OF THE ALUMINUM SHALL BE COATED WITH ONE HEAVY COAT OF BITUMINOUS PAINT.

6. DESIGN CRITERIA

A) PLATFORM LL = 125 PSF.
GENERATOR, ENCLOSURE, BASE FUEL TANK
EMPTY = 22988 LBS
FULL = 36848 LBS
PREFABRICATED BUILDING
EMPTY = 54100 LBS
WITH ELECTRICAL EQUIPMENT = 62,000 LBS

B) WETWELL TOP SLAB LL = 300 PSF

C) WIND DESIGN DATA:
VULT = 150 MPH
WIND EXPOSURE C
RISK CATEGORY II

D) FLOOD DESIGN DATA
FEMA FIRM: 12081C0312E
ZONE AE
BASE FLOOD ELEVATION = 11' NAVD 88
DESIGN STILLWATER FLOOD EL. = 9.05'

E) ALLOWABLE SOIL BEARING CAPACITY = 1,700 PSF.

F) CODES:
2020 FLORIDA BUILDING CODE
ASCE 7-16
ACI 318-14

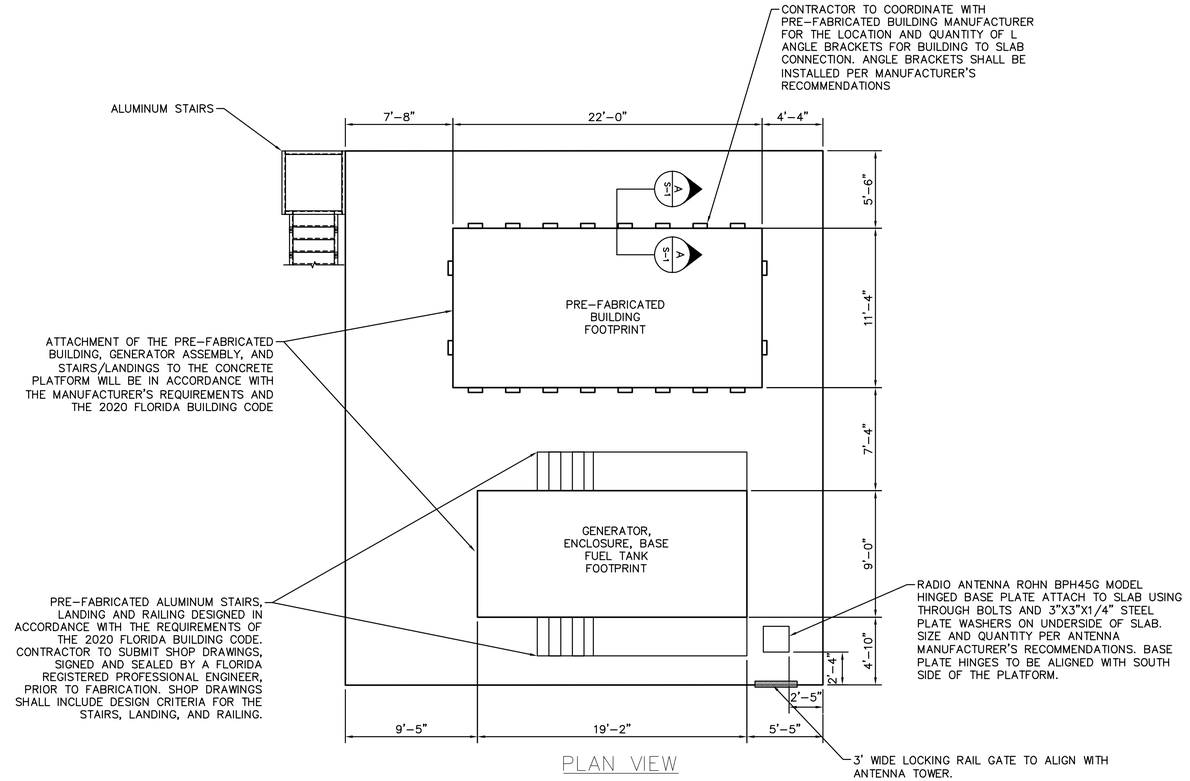

PLAN VIEW

PLATFORM EQUIPMENT LAYOUT PLAN (1 / S-1)

NTS

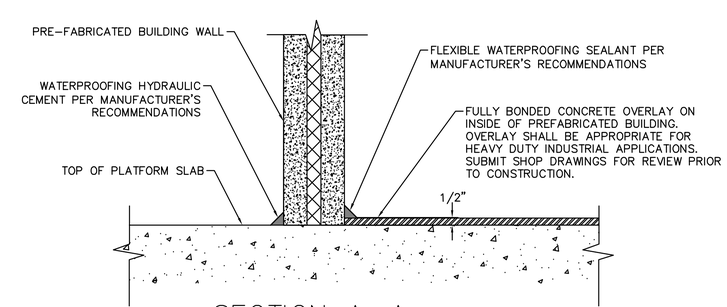

SECTION A–A (2 / S-1)

NTS

No.	REVISIONS	DATE	BY

Kimley»Horn

© 2022 KIMLEY–HORN AND ASSOCIATES, INC.

100 2ND AVENUE SOUTH, SUITE 105–N, ST. PETERSBURG, FL 33701
PHONE: 727–547–3999
WWW.KIMLEY–HORN.COM REGISTRY NO. 35106

KHA PROJECT	148400067
DATE	FEB 2022
SCALE	AS SHOWN
DESIGNED BY	SES
DRAWN BY	GMB
CHECKED BY	SNR

Manatee County FLORIDA

BAYSHORE YACHT BASIN FORCE MAIN AND LIFT STATION REPLACEMENT

MANATEE COUNTY

LICENSED PROFESSIONAL

SETH E SCHMID, P.E.

FL LICENSE NUMBER 54640

DATE:

STRUCTURAL NOTES/ EQUIPMENT LAYOUT

SHEET NUMBER

S-1

This document, together with the concepts and designs presented herein, as an instrument of service, is intended only for the specific purpose and client for which it was prepared. Reuse of and improper reliance on this document without written authorization and adaptation by Kimley-Horn and Associates, Inc. shall be without liability to Kimley-Horn and Associates, Inc.

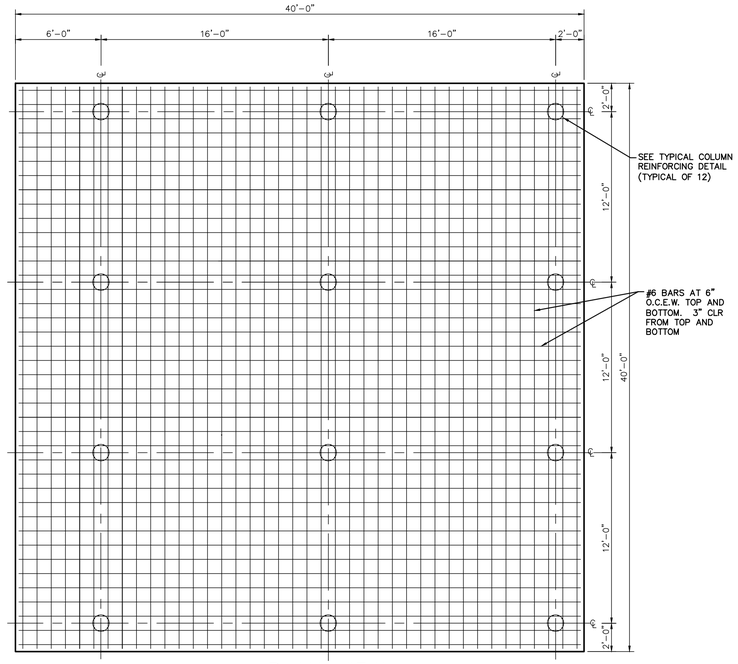

PLAN VIEW

FOUNDATION (1 / S-2)

3/16" = 1'-0"

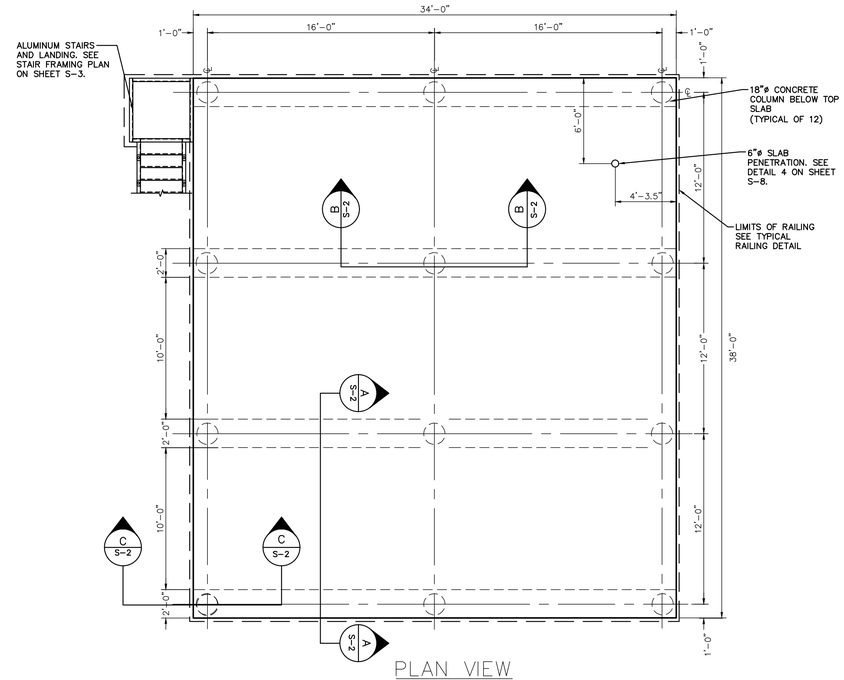

PLAN VIEW

TOP SLAB (2 / S-2)

3/16" = 1'-0"

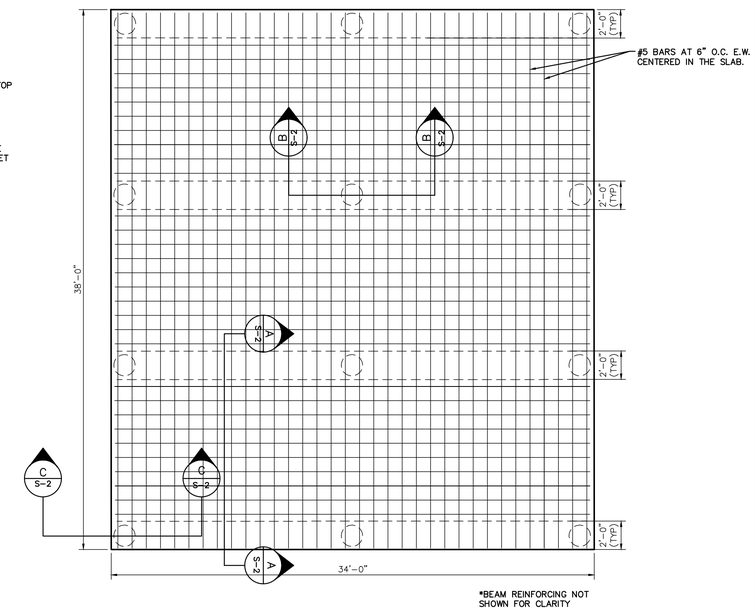

PLAN VIEW

TOP SLAB REINFORCING PLAN (3 / S-2)

N.T.S.

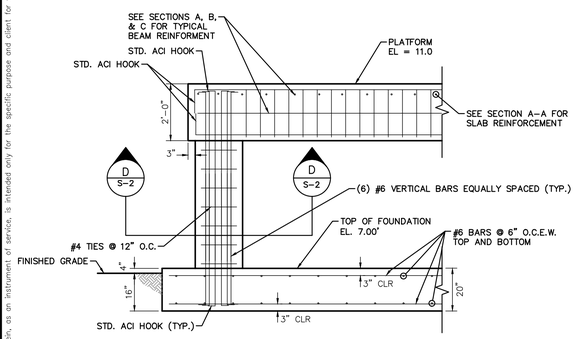

ELEVATION VIEW

TYPICAL COLUMN REINFORCEMENT (4 / S-2)

3/8" = 1'-0"

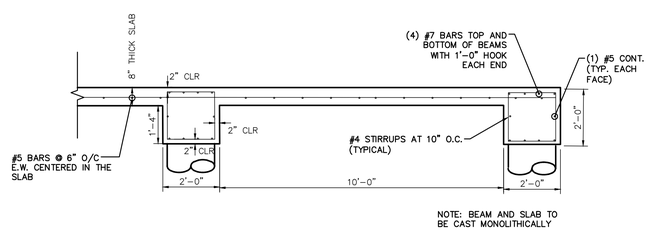

SECTION A-A (2 / S-2)

TYPICAL BEAM AND SLAB (5 / S-2)

3/8" = 1'-0"

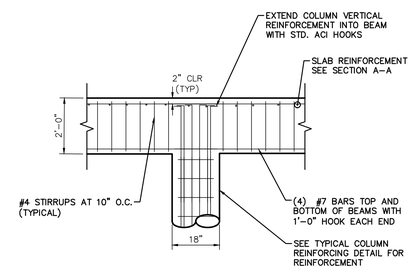

SECTION B-B (2 / S-2)

TYPICAL INTERIOR BEAM (6 / S-2)

3/8" = 1'-0"

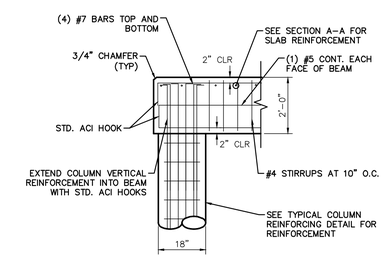

SECTION C-C (2 / S-2)

TYPICAL EDGE BEAM (7 / S-2)

3/8" = 1'-0"

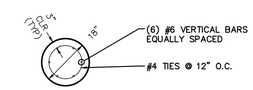

SECTION D-D (2 / S-2)

3/8" = 1'

No.	REVISIONS	DATE	BY

Kimley»Horn

© 2022 KIMLEY-HORN AND ASSOCIATES, INC.

100 2ND AVENUE SOUTH, SUITE 105-N, ST. PETERSBURG, FL 33701
PHONE: 727-547-3999
WWW.KIMLEY-HORN.COM REGISTRY NO. 35106

KHA PROJECT 148400067
DATE FEB 2022
SCALE AS SHOWN
DESIGNED BY SES
DRAWN BY GMB
CHECKED BY SNR

Manatee County FLORIDA

BAYSHORE YACHT BASIN FORCE MAIN AND LIFT STATION REPLACEMENT

MANATEE COUNTY

LICENSED PROFESSIONAL

SETH E SCHMID, P.E.

FL LICENSE NUMBER 54640

DATE:

ELEVATED PLATFORM DETAILS

SHEET NUMBER

S-2

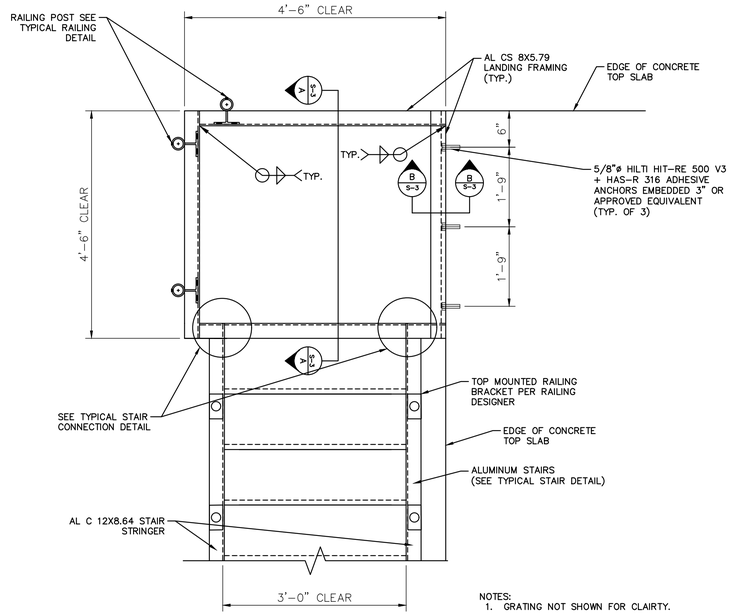

NOTES:
1. GRATING NOT SHOWN FOR CLAIRTY.

STAIR FRAMING PLAN
N.T.S. (1 / S-3)

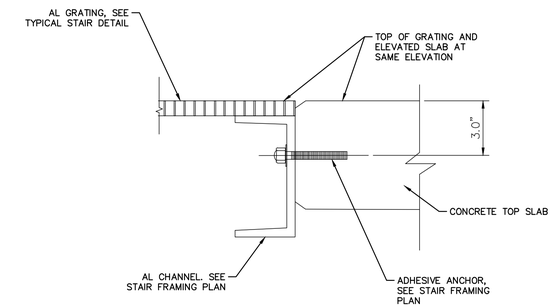

SECTION B–B
N.T.S. (2 / S-3)

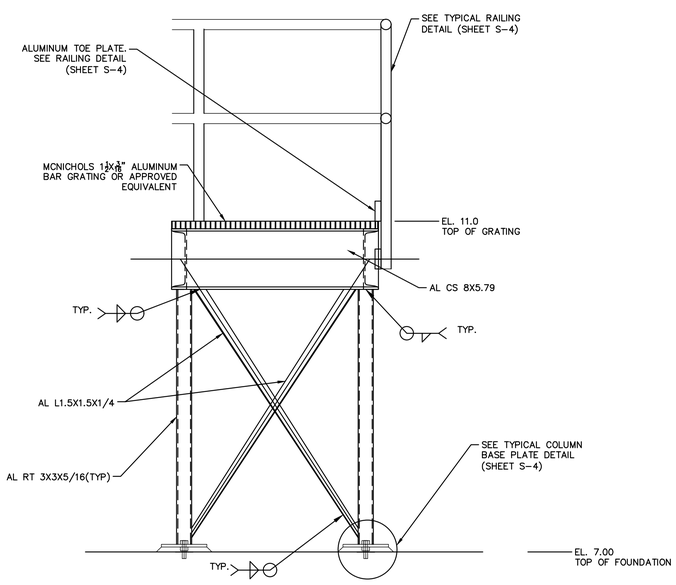

SECTION A–A
N.T.S. (3 / S-3)

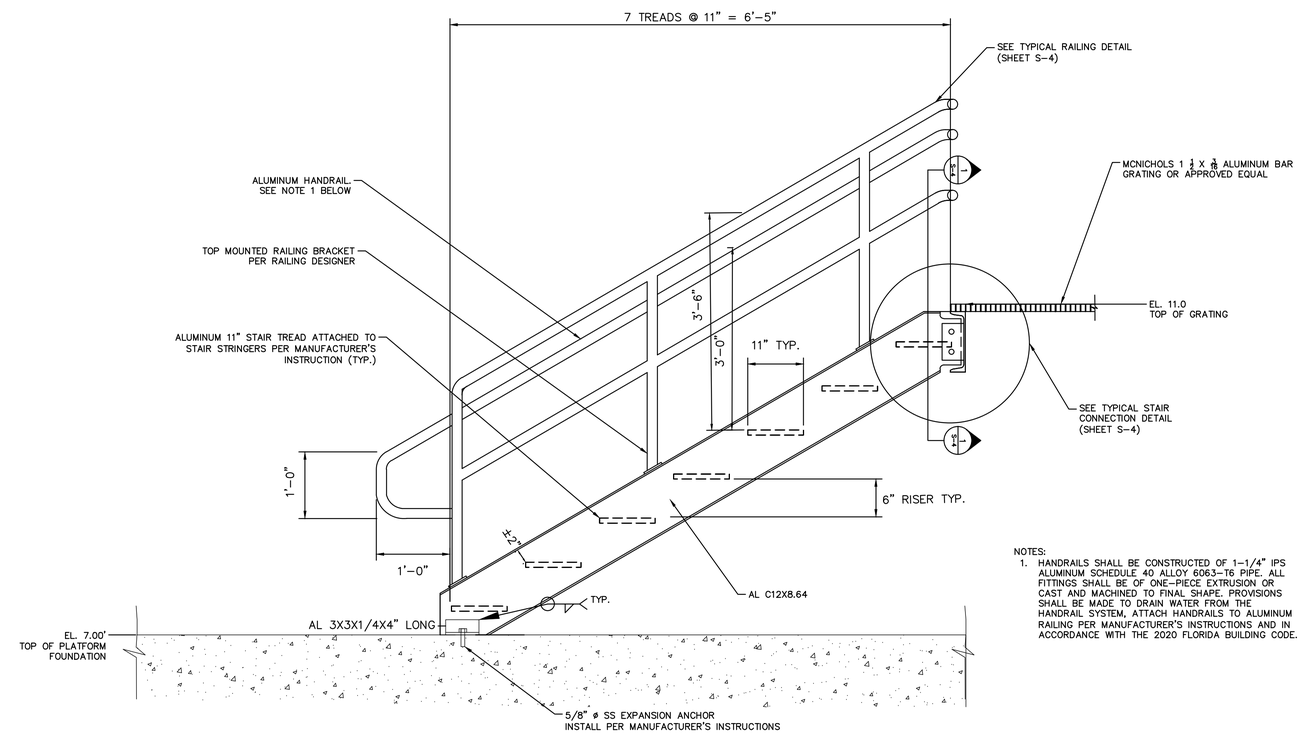

NOTES:
1. HANDRAILS SHALL BE CONSTRUCTED OF 1-1/4" IPS ALUMINUM SCHEDULE 40 ALLOY 6063-T6 PIPE. ALL FITTINGS SHALL BE OF ONE-PIECE EXTRUSION OR CAST AND MACHINED TO FINAL SHAPE. PROVISIONS SHALL BE MADE TO DRAIN WATER FROM THE HANDRAIL SYSTEM, ATTACH HANDRAILS TO ALUMINUM RAILING PER MANUFACTURER'S INSTRUCTIONS AND IN ACCORDANCE WITH THE 2020 FLORIDA BUILDING CODE.

TYPICAL STAIR DETAIL
N.T.S. (3 / S-3)

No.	REVISIONS	DATE	BY

Kimley»Horn

© 2022 KIMLEY-HORN AND ASSOCIATES, INC.
100 2ND AVENUE SOUTH, SUITE 105-N, ST. PETERSBURG, FL 33701
PHONE: 727-547-3999
WWW.KIMLEY-HORN.COM REGISTRY NO. 35106

KHA PROJECT	148400067
DATE	FEB 2022
SCALE	AS SHOWN
DESIGNED BY	SES
DRAWN BY	GMB
CHECKED BY	SNR

Manatee County FLORIDA

BAYSHORE YACHT BASIN FORCE MAIN AND LIFT STATION REPLACEMENT

MANATEE COUNTY

LICENSED PROFESSIONAL

SETH E SCHMID, P.E.

FL LICENSE NUMBER 54640

DATE:

ELEVATED PLATFORM DETAILS

SHEET NUMBER

S-3

This document, together with the concepts and designs presented herein, as an instrument of service, is intended only for the specific purpose and client for which it was prepared. Reuse of and improper reliance on this document without written authorization and adaptation by Kimley-Horn and Associates, Inc. shall be without liability to Kimley-Horn and Associates, Inc.

This document, together with the concepts and designs presented herein, as an instrument of service, is intended only for the specific purpose and client for which it was prepared. Reuse of and improper reliance on this document without written authorization and adaptation by Kimley-Horn and Associates, Inc. shall be without liability to Kimley-Horn and Associates, Inc.

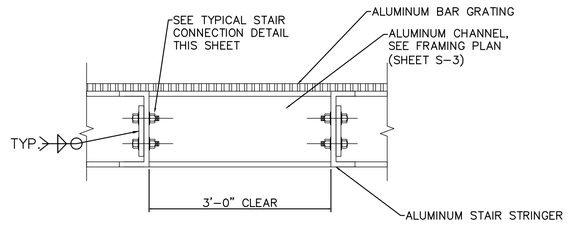

TYPICAL STAIR CROSS SECTION (1/S-4)
N.T.S.

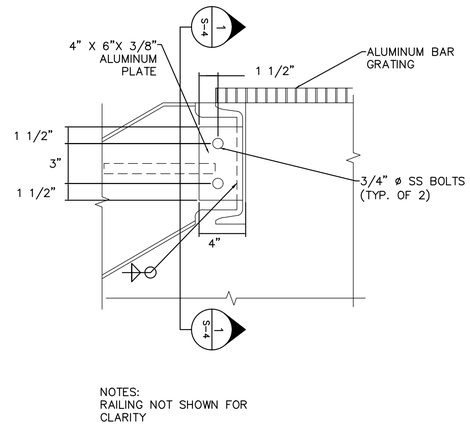

TYPICAL STAIR CONNECTION DETAIL (2/S-4)
N.T.S.

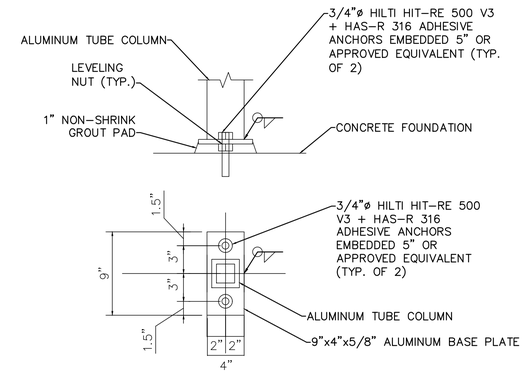

TYPICAL COLUMN BASE DETAIL (3/S-4)
N.T.S.

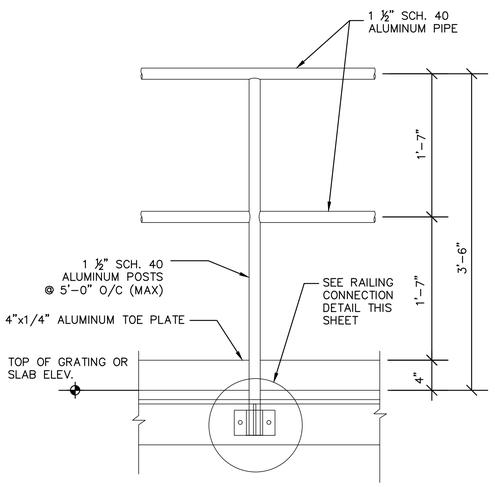

TYPICAL RAILING DETAIL (4/S-4)
N.T.S.

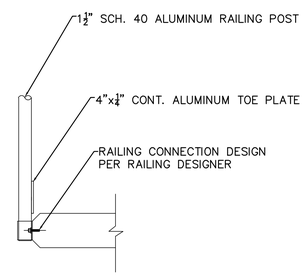

RAILING CONNECTION DETAIL (5/S-4)
N.T.S.

DESIGN SPECIFICATIONS FOR FACTORY-INDUSTRIAL RAILING APPLICATIONS

1. RAILING SHALL BE DESIGNED IN ACCORDANCE WITH THE CURRENT EDITION OF THE FLORIDA BUILDING CODE.
2. THE MANUFACTURER SHALL SUBMIT CALCULATIONS SIGNED AND SEALED BY A FLORIDA REGISTERED PROFESSIONAL ENGINEER FOR REVIEW.
3. POST SPACING SHALL BE A MAXIMUM OF 5'-0". POSTS AND RAILINGS SHALL BE A MINIMUM OF 1 ½" SCH. 40 ALUMINUM PIPE, ALLOY 6063-T6, ASTM-B-429 OR ASTM-B-221. THE RAILING MANUFACTURER SHALL SHOW THAT THEIR POSTS ARE OF ADEQUATE STRENGTH TO MEET THE LOADING REQUIREMENTS. IF THE MANUFACTURER'S POSTS ARE NOT OF ADEQUATE STRENGTH, THE MANUFACTURER MAY REDUCE POST SPACING, OR ADD REINFORCING DOWEL, OR DO BOTH TO MEET LOADING REQUIREMENTS.
4. RAILING POSTS AND HORIZONTAL MEMBERS SHALL BE WELDED TOGETHER AND SHALL NOT BE MECHANICALLY CONNECTED EXCEPT AT EXPANSION JOINTS..
5. POSTS SHALL NOT INTERRUPT CONTINUATION OF THE TOP RAIL AT ANY POINT ALONG THE RAILING, INCLUDING CORNERS AND END TERMINATIONS (OSHA 191023). THE TOP SURFACE OF THE TOP RAILING SHALL BE SMOOTH AND UNINTERRUPTED BY PROJECTING FITTINGS.
6. THE MIDRAIL AT A CORNER RETURN SHALL BE ABLE TO WITHSTAND A 200 LB. LOAD WITHOUT LOOSENING. THE MANUFACTURER IS TO DETERMINE THIS DIMENSION FOR THEIR SYSTEM.
7. TOE PLATE SHALL CONFORM TO OSHA STANDARDS. TOE PLATE SHALL BE A MINIMUM OF 4" HIGH AND SHALL BE AN EXTRUSION THAT ATTACHES TO THE POSTS TO ALLOW FOR EXPANSION AND CONTRACTION BETWEEN POSTS. TOE PLATES SHALL BE SET ¼" ABOVE THE WALKING SURFACE. TOE PLATES SHALL BE PROVIDED ON RAILING AS REQUIRED BY OSHA AND/OR AS SHOWN ON DRAWINGS.
8. FIELD WELDING OF THE ALUMINUM RAILING IS NOT ALLOWED.

No.	REVISIONS	DATE	BY

Kimley»Horn

© 2022 KIMLEY-HORN AND ASSOCIATES, INC.
100 2ND AVENUE SOUTH, SUITE 105-N, ST. PETERSBURG, FL 33701
PHONE: 727-547-3999
WWW.KIMLEY-HORN.COM REGISTRY NO. 35106

KHA PROJECT 148400067
DATE FEB 2022
SCALE AS SHOWN
DESIGNED BY SES
DRAWN BY GMB
CHECKED BY SNR

Manatee County FLORIDA

BAYSHORE YACHT BASIN FORCE MAIN AND LIFT STATION REPLACEMENT

MANATEE COUNTY

LICENSED PROFESSIONAL
SETH E SCHMID, P.E.
FL LICENSE NUMBER 54640
DATE:

STAIR AND RAILING DETAILS

SHEET NUMBER
S-4

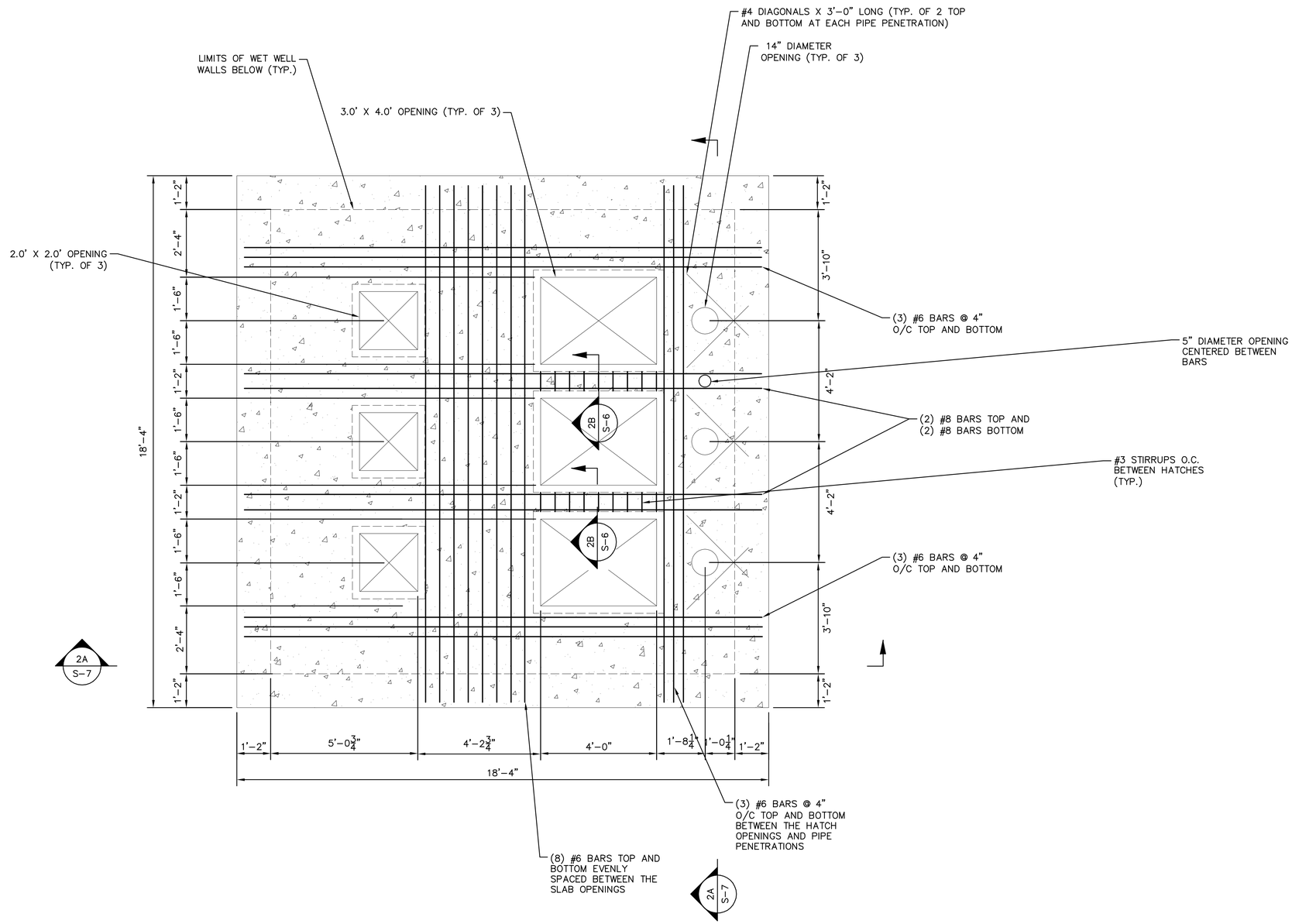

2 WETWELL TOP SLAB PLAN
SCALE: NTS

NOTE:

1. MAIN SLAB REINFORCEMENT NOT SHOWN FOR CLARITY. SEE TYPICAL WETWELL SECTION FOR TYPICAL SLAB REINFORCEMENT.

This document, together with the concepts and designs presented herein, as an instrument of service, is intended only for the specific purpose and client for which it was prepared. Reuse of and improper reliance on this document without written authorization and adaptation by Kimley-Horn and Associates, Inc. shall be without liability to Kimley-Horn and Associates, Inc.

No.	REVISIONS	DATE	BY

Kimley»Horn

© 2022 KIMLEY-HORN AND ASSOCIATES, INC.

100 2ND AVENUE SOUTH, SUITE 105-N, ST. PETERSBURG, FL 33701
PHONE: 727-547-3999
WWW.KIMLEY-HORN.COM REGISTRY NO. 35106

KHA PROJECT 148400067
DATE FEB 2022
SCALE AS SHOWN
DESIGNED BY SES
DRAWN BY GMB
CHECKED BY SNR

Manatee County FLORIDA

BAYSHORE YACHT BASIN FORCE MAIN AND LIFT STATION REPLACEMENT

MANATEE COUNTY

LICENSED PROFESSIONAL

SETH E SCHMID, P.E.

54640

DATE:

WETWELL TOP SLAB PLAN

SHEET NUMBER

S-5

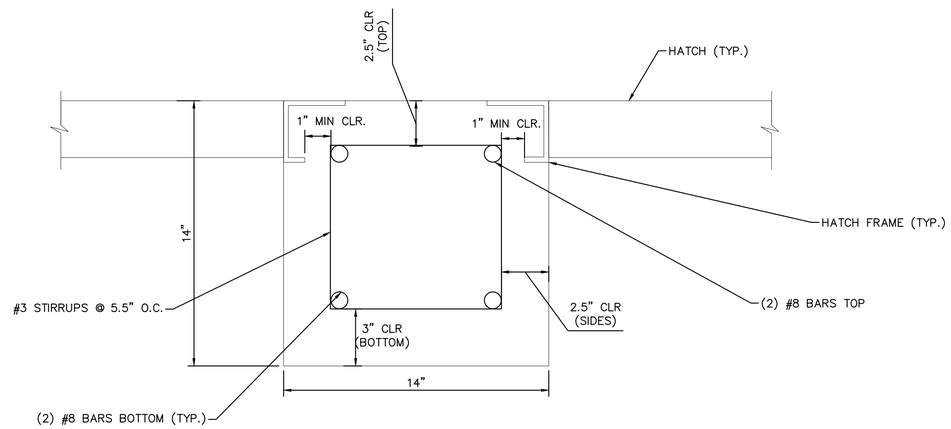

2B / S-5 WETWELL SECTION BETWEEN HATCH OPENINGS
SCALE: NTS

This document, together with the concepts and designs presented herein, as an instrument of service, is intended only for the specific purpose and client for which it was prepared. Reuse of and improper reliance on this document without written authorization and adaptation by Kimley-Horn and Associates, Inc. shall be without liability to Kimley-Horn and Associates, Inc.

No.	REVISIONS	DATE	BY

Kimley»Horn

© 2022 KIMLEY-HORN AND ASSOCIATES, INC.
100 2ND AVENUE SOUTH, SUITE 105-N, ST. PETERSBURG, FL 33701
PHONE: 727-547-3999
WWW.KIMLEY-HORN.COM REGISTRY NO. 35106

KHA PROJECT 148400067
DATE FEB 2022
SCALE AS SHOWN
DESIGNED BY SES
DRAWN BY GMB
CHECKED BY SNR

Manatee County FLORIDA

BAYSHORE YACHT BASIN FORCE MAIN AND LIFT STATION REPLACEMENT
MANATEE COUNTY

LICENSED PROFESSIONAL
SETH E SCHMID, P.E.
54640
DATE:

WETWELL TOP SLAB SECTION

SHEET NUMBER
S-6

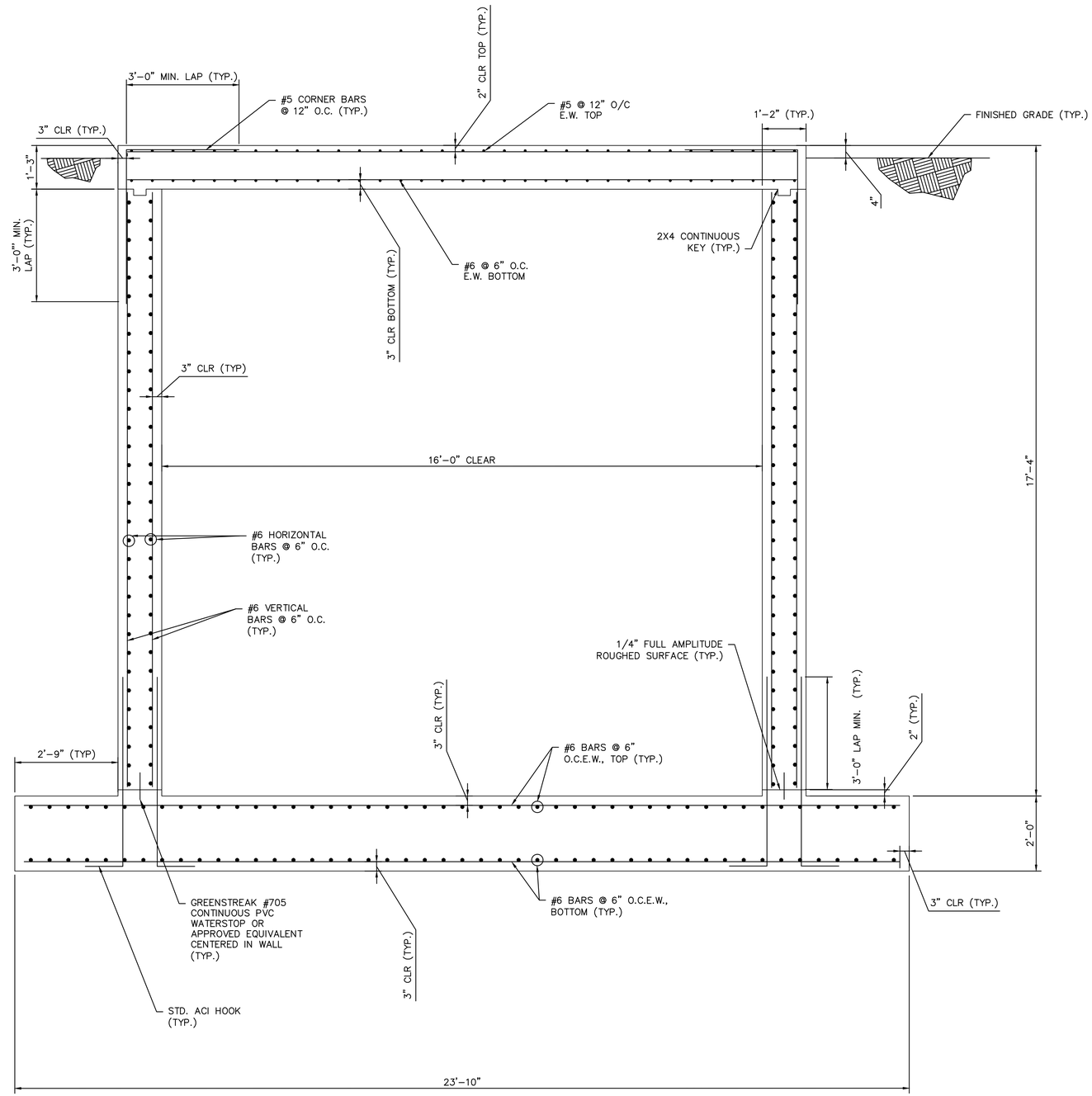

2A / S-7 WETWELL SECTION
SCALE: N.T.S.

NOTES:
1. ADDITIONAL TOP SLAB REINFORCEMENT NOT SHOWN FOR CLARITY. SEE WET WELL TOP SLAB PLAN SHEET S-5.
2. PIPE PENETRATIONS NOT SHOWN FOR CLARITY. SEE MECHANICAL SHEETS FOR ALL PIPE PENETRATION INSTALLATION DETAILS.
3. FOR DETAILS AND ADDITIONAL REINFORCING NOT SHOWN, INCLUDING WALL OPENINGS AND TYPICAL WALL CORNER REINFORCEMENT, SEE DETAILS, SHEET S-8.
4. ADDITIONAL VERTICAL REINFORCEMENT EITHER SIDE OF WALL OPENINGS SHALL EXTEND TO BASE OF WALL AND LAP ADDITIONAL WALL DOWELS ON EITHER SIDE OF OPENING. WALL DOWELS SHALL BE DEVELOPED IN THE FOUNDATION WITH STD ACI HOOKS.

This document, together with the concepts and designs presented herein, as an instrument of service, is intended only for the specific purpose and client for which it was prepared. Reuse of and improper reliance on this document without written authorization and adaptation by Kimley-Horn and Associates, Inc. shall be without liability to Kimley-Horn and Associates, Inc.

No.	REVISIONS	DATE	BY

Kimley»Horn

© 2022 KIMLEY-HORN AND ASSOCIATES, INC.
100 2ND AVENUE SOUTH, SUITE 105-N, ST. PETERSBURG, FL 33701
PHONE: 727-547-3999
WWW.KIMLEY-HORN.COM REGISTRY NO. 35106

KHA PROJECT 148400067
DATE FEB 2022
SCALE AS SHOWN
DESIGNED BY SES
DRAWN BY GMB
CHECKED BY SNR

Manatee County FLORIDA

BAYSHORE YACHT BASIN FORCE MAIN AND LIFT STATION REPLACEMENT

MANATEE COUNTY

LICENSED PROFESSIONAL
SETH E SCHMID, P.E.
54640
DATE:

WETWELL SECTION

SHEET NUMBER
S-7

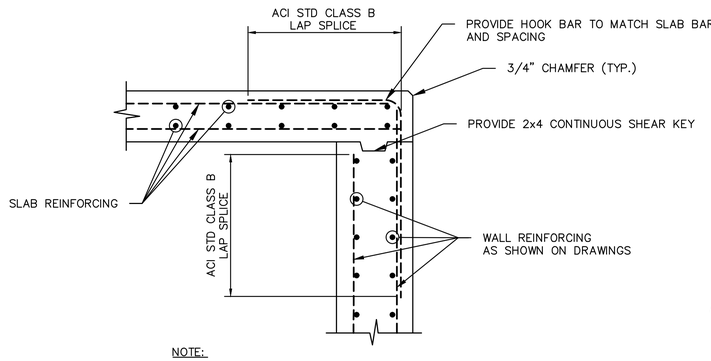

NOTE:

1. REFER TO STRUCTURE PLANS FOR WALL AND SLAB THICKNESSES AND REINFORCING

1 SLAB TO WALL CONNECTION DETAIL
SCALE: NTS

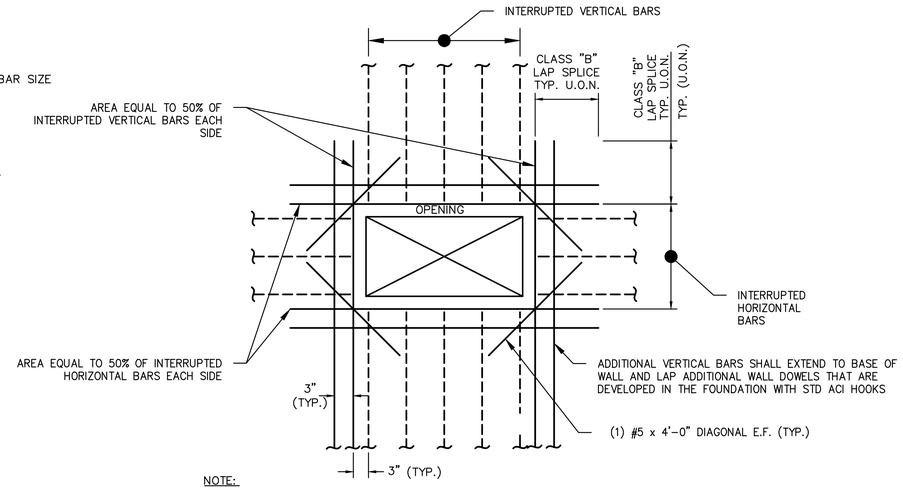

NOTE:

1. WHERE INTEGRAL BEAMS OR DROP DOWN BEAMS ARE ADJACENT TO OPENING, ADDITIONAL REINFORCING IS NOT REQUIRED.
2. PROVIDE 3" CLEAR AROUND OPENINGS, UNLESS NOTED OTHERWISE.
3. ADDITIONAL VERTICAL REINFORCING SHALL BE DEVELOPED IN FOOTING WITH STD ACI HOOKS

3 TYPICAL RECTANGULAR OPENING REINFORCING DETAIL
SCALE: NTS

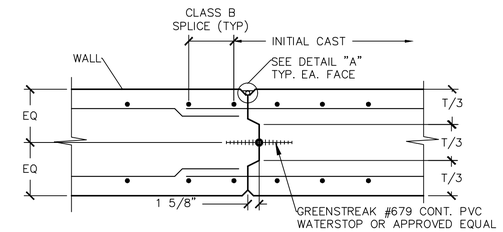

STOP WATERSTOP 6" BELOW TOP OF WALL.

NOTE:

1. CONTRACTOR SUBMIT LOCATION IF NOT SPECIFIED
2. DO NOT LOCATE VERTICAL CONSTRUCTION JOINTS WITHIN 10' OF WET WELL CORNERS
3. CONSTRUCTION JOINT DETAIL FOR HORIZONTAL OR VERTICAL APPLICATION

5 WALL CONSTRUCTION JOINT DETAIL
SCALE: NTS

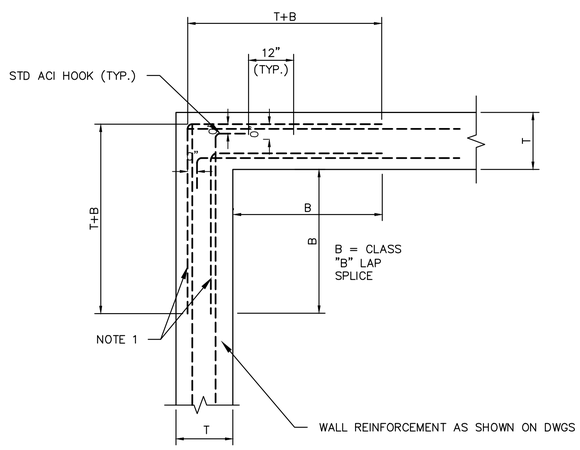

NOTE:
1. HORIZONTAL CORNER BARS SHALL MATCH SIZE AND SPACING OF HORIZONTAL BARS

2 TYPICAL CORNER REINFORCING DETAIL
SCALE: NTS

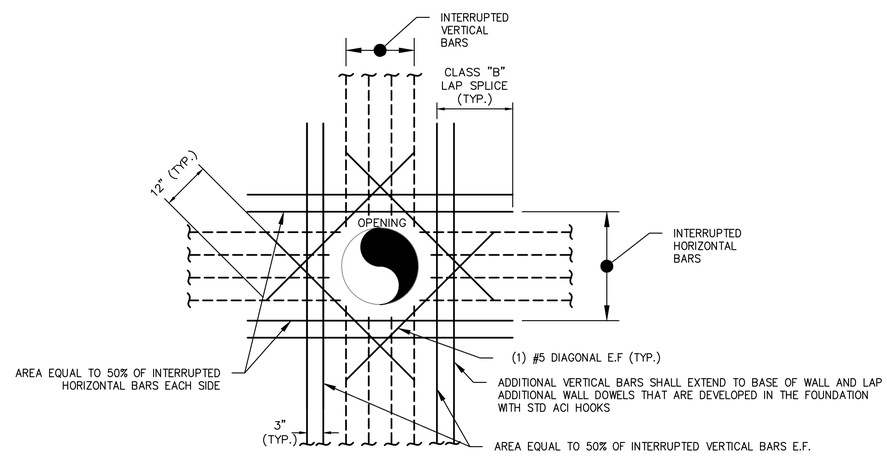

NOTE:

1. WHERE INTEGRAL BEAMS OR DROP DOWN BEAMS ARE ADJACENT TO OPENING, ADDITIONAL REINFORCING IS NOT REQUIRED.
2. PROVIDE 3" CLEAR AROUND OPENINGS, UNLESS NOTED OTHERWISE.
3. ADDITIONAL VERTICAL REINFORCING SHALL BE DEVELOPED IN FOOTING WITH STD ACI HOOKS

4 TYPICAL CIRCULAR OPENING REINFORCING DETAIL
SCALE: NTS

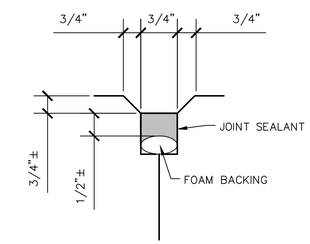

NOTE:

1. JOINT SEALANT SHALL BE SIKAFLEX – 2C NS EZ MIX OR APPROVED EQUIVALENT. INSTALL PER MANUFACTURERS REQUIREMENTS

6 DETAIL "A" CONTROL/CONSTRUCTION JOINT
SCALE: NTS

No.	REVISIONS	DATE	BY

Kimley»Horn

© 2022 KIMLEY-HORN AND ASSOCIATES, INC.
100 2ND AVENUE SOUTH, SUITE 105-N, ST. PETERSBURG, FL 33701
PHONE: 727-547-3999
WWW.KIMLEY-HORN.COM REGISTRY NO. 35106

KHA PROJECT 148400067
DATE FEB 2022
SCALE AS SHOWN
DESIGNED BY SES
DRAWN BY GMB
CHECKED BY SNR

Manatee County FLORIDA

BAYSHORE YACHT BASIN FORCE MAIN AND LIFT STATION REPLACEMENT

MANATEE COUNTY

LICENSED PROFESSIONAL
SETH E SCHMID, P.E.
54640
DATE:

STRUCTURAL WETWELL DETAILS

SHEET NUMBER
S-8

This document, together with the concepts and designs presented herein, as an instrument of service, is intended only for the specific purpose and client for which it was prepared. Reuse of and improper reliance on this document without written authorization and adaptation by Kimley-Horn and Associates, Inc. shall be without liability to Kimley-Horn and Associates, Inc.

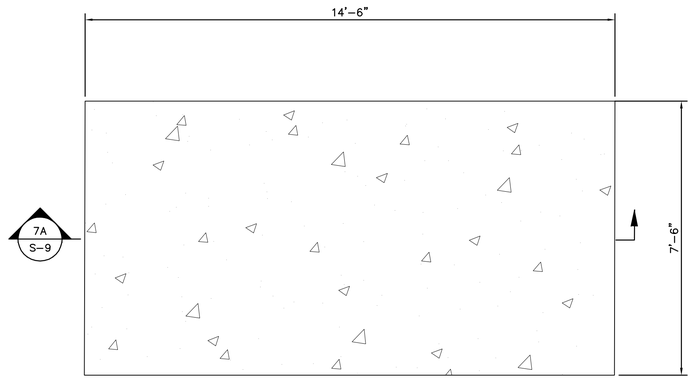

7 / - ODOR CONTROL PAD FOUNDATION PLAN
SCALE: NTS

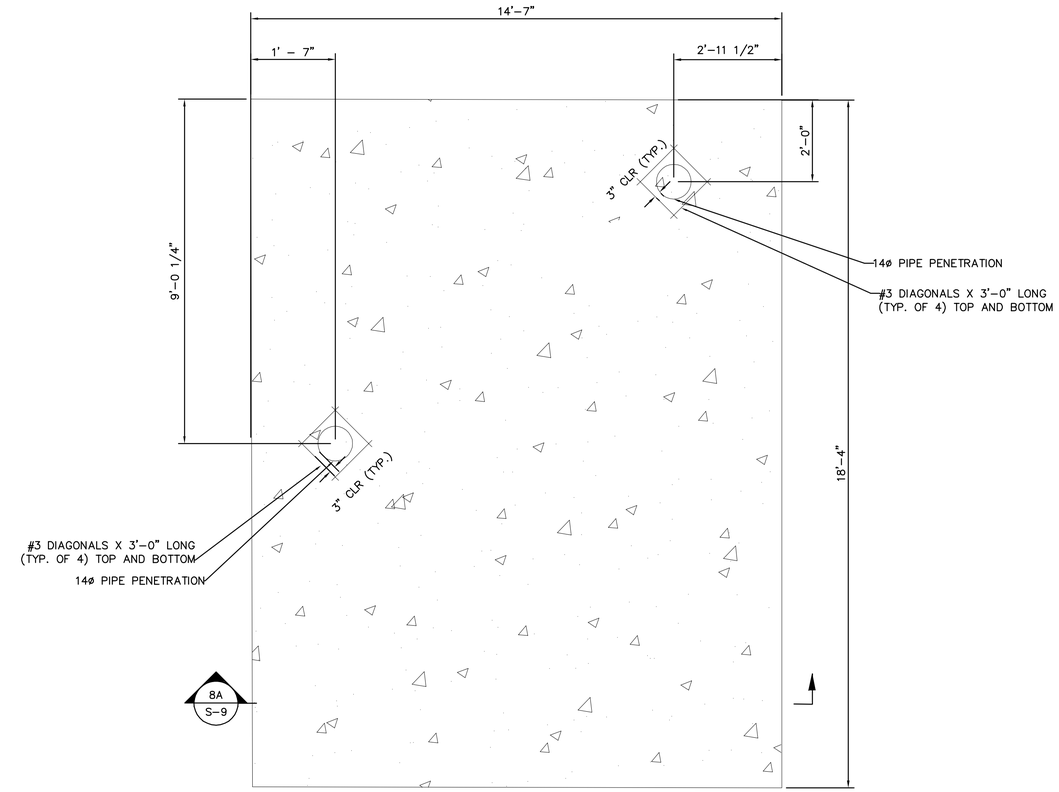

8 / S-9 MECHANICAL ASSEMBLY SLAB PLAN
SCALE: NTS

NOTE:
SEE MECHANICAL ASSEMBLY SLAB TYPICAL SECTION FOR SLAB REINFORCEMENT

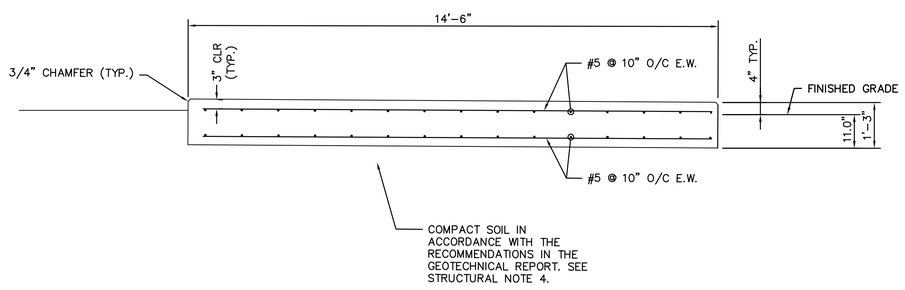

7A / S-9 ODOR CONTROL SLAB FOUNDATION SECTION
SCALE: NTS

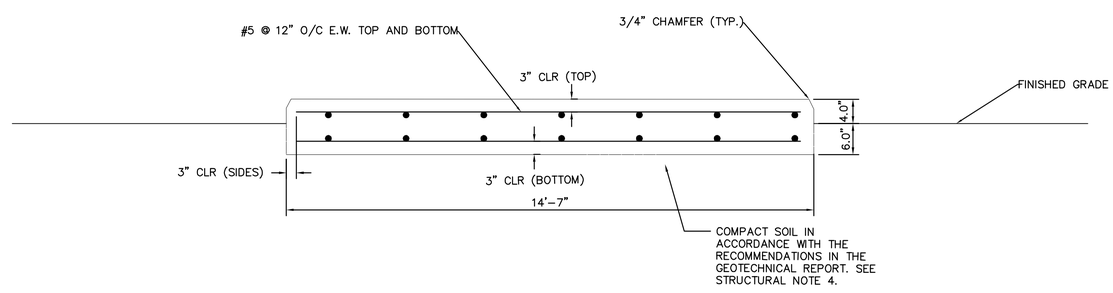

8A / S-9 MECHANICAL ASSEMBLY SLAB TYPICAL SECTION
SCALE: NTS

This document, together with the concepts and designs presented herein, as an instrument of service, is intended only for the specific purpose and client for which it was prepared. Reuse of and improper reliance on this document without written authorization and adaptation by Kimley-Horn and Associates, Inc. shall be without liability to Kimley-Horn and Associates, Inc.

No.	REVISIONS	DATE	BY

Kimley»Horn

© 2022 KIMLEY-HORN AND ASSOCIATES, INC.
100 2ND AVENUE SOUTH, SUITE 105-N, ST. PETERSBURG, FL 33701
PHONE: 727-547-3999
WWW.KIMLEY-HORN.COM REGISTRY NO. 35106

KHA PROJECT 148400067
DATE FEB 2022
SCALE AS SHOWN
DESIGNED BY SES
DRAWN BY GMB
CHECKED BY SNR

Manatee County FLORIDA

BAYSHORE YACHT BASIN FORCE MAIN AND LIFT STATION REPLACEMENT
MANATEE COUNTY

LICENSED PROFESSIONAL
SETH E SCHMID, P.E.
54640
DATE:

VALVE ASSEMBLY AND ODOR CONTROL SLABS

SHEET NUMBER
S-9

This document, together with the concepts and designs presented herein, as an instrument of service, is intended only for the specific purpose and client for which it was prepared. Reuse of and improper reliance on this document without written authorization and adaptation by Kimley-Horn and Associates, Inc. shall be without liability to Kimley-Horn and Associates, Inc.

LANDSCAPE SPECIFICATIONS

1. SCOPE OF WORK

1.1. THE WORK CONSISTS OF: FURNISHING ALL LABOR, MATERIALS, EQUIPMENT, TOOLS, TRANSPORTATION, AND ANY OTHER APPURTENANCES NECESSARY FOR THE COMPLETION OF THIS PROJECT AS SHOWN ON THESE PLANS.

1.2. WORK SHALL INCLUDE MAINTENANCE AND WATERING OF ALL CONTRACT PLANTING AREAS UNTIL CERTIFICATION OF ACCEPTANCE BY THE OWNER.

1.3. WORK SHALL BE COORDINATED WITH OTHER TRADES TO PREVENT CONFLICTS.

2. PROTECTION OF EXISTING AND PROPOSED SITE ELEMENTS

2.1. PROTECT ALL EXISTING SITE ITEMS, ALREADY COMPLETED OR ESTABLISHED AND DESIGNATED TO REMAIN FROM DAMAGE BY THE CONTRACTOR UNLESS OTHERWISE SPECIFIED. ALL DAMAGE RESULTING FROM THE CONTRACTOR'S WORK SHALL BE REPAIRED OR REPLACED TO THE SATISFACTION OF THE OWNER, AT NO COST TO THE OWNER.

2.2. MAINTAIN ALL NECESSARY BMP DEVICES THROUGHOUT THE DURATION OF ALL CONSTRUCTION ACTIVITIES.

2.3. WHERE APPLICABLE, SUBMIT A DETAILED PROJECT SPECIFIC WORK ZONE TRAFFIC CONTROL PLAN IN ACCORDANCE WITH THE APPROPRIATE REGULATORY AGENCY STANDARDS UNLESS THE WORK REQUIRES NOTHING MORE THAN A DIRECT APPLICATION OF FDOT STANDARD PLANS FOR ROAD AND BRIDGE CONSTRUCTION, INDEX 102-600.

2.4. THE CONTRACTOR SHALL BE RESPONSIBLE FOR LOCATING ALL UTILITIES, WHETHER PUBLIC OR PRIVATE, PRIOR TO CONSTRUCTION ACTIVITIES. THE INFORMATION AND DATA SHOWN WITH RESPECT TO EXISTING UTILITIES IS APPROXIMATE. THE OWNER AND DESIGN PROFESSIONAL SHALL NOT BE RESPONSIBLE FOR THE ACCURACY AND COMPLETENESS OF ANY SUCH INFORMATION OR DATA. THE CONTRACTOR SHALL HAVE FULL RESPONSIBILITY FOR: REVIEWING AND CHECKING ALL SUCH INFORMATION AND DATA; LOCATING ALL UTILITIES PRIOR TO CONSTRUCTION; THE SAFETY AND PROTECTION THEREOF; REPAIRING ANY DAMAGE RESULTING FROM THE WORK. THE COST OF ALL WILL BE CONSIDERED AS HAVING BEEN INCLUDED IN THE CONTRACT PRICE. THE CONTRACTOR SHALL NOTIFY ANY AFFECTED UTILITY COMPANIES OR AGENCIES IN WRITING AT LEAST 48 HOURS PRIOR TO BEGINNING CONSTRUCTION. THE CONTRACTOR SHALL NOTIFY THE LANDSCAPE ARCHITECT IN WRITING WHEN ANY CONFLICT BETWEEN UTILITIES AND THESE PLANS EXIST PRIOR TO PLANTING.

2.5. THE CONTRACTOR SHALL BE RESPONSIBLE FOR ALL UNAUTHORIZED CUTTING OR DAMAGE TO PLANT MATERIAL EXISTING OR OTHERWISE. THIS SHALL INCLUDE COMPACTION AND SPILLING OF ANY DELETERIOUS MATERIALS WITHIN THE DRIP-LINE OF EXISTING TREES TO REMAIN. PLANT MATERIAL KILLED OR DAMAGED THAT IS MISSHAPEN AND/OR UNSIGHTLY SHALL BE REPLACED WITH LIKE SIZE AND KIND TO THE SATISFACTION OF THE OWNER OR REGULATORY AGENCY AT THE COST TO THE CONTRACTOR.

2.6. SEE TREE MITIGATION PLAN AND NOTES, IF APPLICABLE.

3. SUBMITTALS

3.1. SUBMIT MATERIAL SAMPLES LISTED BELOW FOR APPROVAL, ON SITE OR AS DETERMINED BY THE OWNER. UPON APPROVAL, DELIVERY OF MATERIALS MAY COMMENCE.

MATERIAL	SAMPLE SIZE
MULCH	ONE (1) GALLON PLASTIC BAG
SOIL MIXTURE	ONE (1) GALLON PLASTIC BAG
PLANTS	ONE (1) OF EACH VARIETY (OR TAGGED IN NURSERY)

3.2. SUBMIT TESTING RESULTS OF SOIL MIXTURE AS PER SECTION 6 BELOW.

4. PLANT MATERIALS

4.1. ALL PLANT MATERIAL SHALL CONFORM TO THE SPECIFICATIONS INDICATED ON THE DRAWINGS AND SHALL BE IN ACCORDANCE WITH GRADES AND STANDARDS FOR NURSERY PLANTS, LATEST EDITION, PUBLISHED BY THE FLORIDA DEPARTMENT OF AGRICULTURE AND CONSUMER SERVICES. ALL PLANTS SHALL BE FLORIDA GRADE NO. 1 OR BETTER AS DETERMINED BY THE FLORIDA DIVISION OF PLANT INDUSTRY. ALL MATERIALS SHALL BE SUBJECT TO APPROVAL BY THE OWNER OR OWNER'S REPRESENTATIVE. NO SUBSTITUTIONS SHALL BE MADE WITHOUT WRITTEN PERMISSION FROM THE LANDSCAPE ARCHITECT AND OWNER.

4.2. ALL TREE SPECIES INSTALLED SHALL BE MATCHED IN SIZE AND SHAPE UNLESS NOTED OTHERWISE.

4.3. PLANTS SHALL BE SUBJECT TO INSPECTION AND APPROVAL AT THE PLACE OF GROWTH, UPON DELIVERY TO THE SITE, DURING PROGRESS OF THE WORK AND/OR AFTER COMPLETION. REJECTED PLANTS SHALL BE REMOVED AND REPLACED IMMEDIATELY.

5. DIGGING AND HANDLING

5.1. PROTECT ROOTS OR ROOT BALLS OF PLANTS AT ALL TIMES FROM SUN, DRYING WINDS, WATER AND FREEZING, AS NECESSARY UNTIL PLANTING. NO PLANT MATERIAL SHALL BE HANDLED BY STEMS.

6. SOIL MIXTURE (PLANTING MEDIUM, PLANTING MIX, TOPSOIL MIX)

6.1. TEST EXISTING SOIL AND AMEND AS NECESSARY IN ACCORDANCE WITH THE GUIDELINES BELOW:

6.2. SOIL MIXTURE (PLANTING MEDIUM FOR PLANT PITS) SHALL CONSIST OF TWO PARTS OF TOPSOIL AND ONE PART SAND, AS DESCRIBED BELOW. SUBMIT SAMPLES AND PH TESTING RESULTS OF SOIL MIXTURE FOR OWNER'S REPRESENTATIVE APPROVAL PRIOR TO PLANT INSTALLATION OPERATIONS COMMENCE.

6.3. TOPSOIL FOR USE IN PREPARING SOIL MIXTURE FOR BACKFILLING PLANT PITS SHALL BE FERTILE, FRIABLE, AND OF A LOAMY CHARACTER; REASONABLY FREE OF SUBSOIL, CLAY LUMPS, BRUSH WEEDS AND OTHER LITTER; FREE OF ROOTS, STUMPS, STONES LARGER THAN 2" IN ANY DIRECTION, AND OTHER EXTRANEOUS OR TOXIC MATTER HARMFUL TO PLANT GROWTH. IT SHALL CONTAIN THREE (3) TO FIVE (5) PERCENT DECOMPOSED ORGANIC MATTER AND HAVE A PH BETWEEN 5.5 AND 7.0.

6.4. SAND SHALL BE COARSE, CLEAN, WELL-DRAINING, NATIVE SAND.

6.5. PLANT TREES IN THE EXISTING NATIVE SOIL ON SITE, UNLESS DETERMINED TO BE UNSUITABLE - AT WHICH POINT THE CONTRACTOR SHALL CONTACT OWNER'S REPRESENTATIVE TO DISCUSS ALTERNATE RECOMMENDATION PRIOR TO PLANTING.

6.6 TREES PLANTED IN TREE WELLS SHALL RECEIVE STRUCTURAL URBAN SOIL. MIX SHALL BE : 50% SAND, 20% PERLITE, 20% PINES FINES AND 10% ORGANIC SOIL.

7. WATER

7.1. PROVIDE WATER NECESSARY FOR PLANTING ESTABLISHMENT AND MAINTENANCE. WATER SHALL BE OF SATISFACTORY QUALITY TO SUSTAIN ADEQUATE PLANT GROWTH AND SHALL NOT CONTAIN HARMFUL, NATURAL OR MAN-MADE ELEMENTS DETRIMENTAL TO PLANTS.

7.2. WATERING/IRRIGATION RESTRICTIONS MAY APPLY - REFER TO PROPERTY'S JURISDICTIONAL AUTHORITY.

8. FERTILIZER

8.1. PROVIDE FERTILIZER APPLICATION SCHEDULE TO OWNER, AS APPLICABLE TO SOIL TYPE, PLANT INSTALLATION TYPE, AND SITE'S PROPOSED USE. SUGGESTED FERTILIZER TYPES SHALL BE ORGANIC OR OTHERWISE NATURALLY-DERIVED.

8.2. FERTILIZER RESTRICTIONS MAY APPLY - REFER TO PROPERTY'S JURISDICTIONAL AUTHORITY.

9. MULCH

9.1. MOISTEN MULCH MATERIAL AT THE TIME OF APPLICATION TO PREVENT WIND DISPLACEMENT, AND APPLIED AT A MINIMUM DEPTH OF THREE (3) INCHES. CONTRACTOR SHALL CLEAR MULCH FROM WITHIN A SIX (6) INCH RADIUS AROUND TRUNK / STEM FLARE. MULCH SHALL BE "FLORIMULCH", EUCALYPTUS MULCH, OR SIMILAR SUSTAINABLY HARVESTED MULCH UNLESS SPECIFIED OTHERWISE.

9.2. PROVIDE A THREE (3) INCH MINIMUM LAYER OF SPECIFIED MULCH OVER THE ENTIRE AREA OF EACH PLANTING BED AND TREE RING (SIX (6) FOOT DIAMETER MINIMUM).

10. CONTAINER GROWN STOCK

10.1. CONTAINER GROWN PLANTS SHALL HAVE BEEN GROWN IN IT'S CONTAINER SUFFICIENTLY LONG ENOUGH FOR THE NEW FIBROUS ROOTS TO HAVE DEVELOPED SO THAT THE ROOT MASS WILL RETAIN ITS SHAPE AND HOLD TOGETHER WHEN REMOVED FROM THE CONTAINER.

10.2. INSUFFICIENT OR POORLY STRUCTURED ROOT SYSTEMS ARE NOT ACCEPTABLE AND WILL BE REJECTED.

10.3. ROOTS PLUS GROWER (RPG) PRODUCTS SHALL BE USED WHERE SPECIFIED.

11. MATERIALS LIST

11.1. ALL QUANTITIES ARE PROVIDED FOR CONVENIENCE ONLY. CONTRACTOR SHALL CONFIRM ALL QUANTITIES PER PLAN PRIOR TO BIDDING AND CONSTRUCTION.

12. FINE GRADING

12.1. THE CONTRACTOR SHALL BE RESPONSIBLE FOR FINE GRADING WHICH CONSISTS OF FINAL FINISHED GRADING (INCLUDING ADDITIONAL SOIL MIXTURE AS NEEDED) FOR LAWN AND PLANTING AREAS THAT HAVE BEEN ROUGH GRADED BY OTHERS. FINISH GRADE SHALL ACCOUNT FOR THICKNESS OF SOD AND/OR MULCH DEPTH.

12.2. ALL PLANTING AREAS SHALL BE GRADED AND MAINTAINED FOR POSITIVE DRAINAGE TO SURFACE/SUBSURFACE STORM DRAIN SYSTEMS. AREAS ADJACENT TO BUILDINGS SHALL SLOPE AWAY FROM THE BUILDINGS. REFER TO CIVIL ENGINEER'S PLANS FOR FINAL GRADES, IF APPLICABLE.

13. PLANTING PROCEDURES

13.1. CLEAN WORK AND SURROUNDING AREAS OF ALL RUBBISH OR OBJECTIONABLE MATTER DAILY. REMOVE ALL MORTAR, CEMENT, AND TOXIC MATERIAL FROM THE SURFACE OF ALL PLANT BEDS. DO NOT MIX THESE MATERIALS WITH THE SOIL. SHOULD THE CONTRACTOR FIND SUCH SOIL CONDITIONS BENEATH THE SOIL WHICH WILL IN ANY WAY ADVERSELY AFFECT THE PLANT GROWTH, IMMEDIATELY CALL IT TO THE ATTENTION OF THE OWNER'S REPRESENTATIVE.

13.2. LOCATE, MAINTAIN AND PROTECT ALL UTILITIES ABOVE AND BELOW GROUND. CALL SUNSHINE STATE ONE CALL OF FLORIDA, INC. (811) TO LOCATE UTILITIES AT LEAST 48 HOURS PRIOR TO CONSTRUCTION.

13.3. NOTIFY LANDSCAPE ARCHITECT IN WRITING IMMEDIATELY IF CONFLICT(S) EXIST WITH PROPOSED TREE LOCATIONS AND EXISTING OVERHEAD POWER LINES IN ACCORDANCE WITH SETBACK REQUIREMENTS OF FPL'S "RIGHT TREE, RIGHT PLACE" PROGRAM. CONSULT THE UNIVERSITY OF FLORIDA'S "TREES AND POWER LINE" WEBSITE FOR TREE SIZE CATEGORIES.

13.4. NOTIFY LANDSCAPE ARCHITECT IN WRITING IMMEDIATELY IF CONFLICT(S) EXIST WITH PROPOSED TREE LOCATIONS AND EXISTING / PROPOSED LIGHT POLES. TREES INSTALLED IN CONFLICT WITH LIGHT POLES ARE SUBJECT TO RELOCATION AT THE EXPENSE OF THE CONTRACTOR.

13.5. REMOVE ALL EXISTING AND IMPORTED DELETERIOUS MATERIAL AND SUB-BASE FROM ALL LANDSCAPE PLANTING AREAS TO A MINIMUM DEPTH OF 36" OR TO NATIVE SOIL. CONTRACTOR IS RESPONSIBLE TO BACKFILL THESE PLANTING AREAS TO ROUGH FINISHED GRADE AS NEEDED WITH CLEAN SOIL MIXTURE.

13.6. FURNISH NURSERY'S CERTIFICATE OF COMPLIANCE WITH ALL APPLICABLE REQUIREMENTS. COMPLY WITH APPLICABLE FEDERAL, STATE, COUNTY, AND LOCAL REGULATIONS GOVERNING LANDSCAPE MATERIALS AND WORK.

13.7. EXCAVATE ALL PLANTING PITS IN ACCORDANCE WITH LANDSCAPE DETAILS PROVIDED. TEST ALL TREE PITS WITH WATER BEFORE PLANTING TO ASSURE PROPER DRAINAGE PERCOLATION IS AVAILABLE. IF POOR DRAINAGE EXISTS, NOTIFY LANDSCAPE ARCHITECT IMMEDIATELY IN WRITING. NO ALLOWANCE WILL BE MADE FOR LOST PLANTS DUE TO IMPROPER DRAINAGE. CONTRACTOR SHALL ENSURE ELIMINATION OF ALL AIR POCKETS AROUND ROOTS.

13.8. SET TREES AND SHRUBS STRAIGHT AT AN ELEVATION THAT, AFTER SETTLEMENT, THE PLANT CROWN WILL STAND ONE (1) TO TWO (2) INCHES ABOVE GRADE. EACH PLANT SHALL BE SET IN THE CENTER OF THE PIT. PLANTING SOIL MIXTURE SHALL BE BACK FILLED, THOROUGHLY TAMPED AROUND THE BALL, AND SETTLED BY WATER (AFTER TAMPING).

13.9. DO NOT COVER TOP OF BALL WITH SOIL MIXTURE. ALL BURLAP, ROPE, WIRES, BASKETS, ETC., SHALL BE REMOVED FROM UPPER ONE THIRD (1/3) OF ROOT BALLS.

13.10. ALL SUCKER GROWTH AND BROKEN OR BADLY DAMAGED BRANCHES SHALL BE REMOVED WITH A CLEAN CUT IN ACCORDANCE WITH ANSI A-300.

13.11. SHRUBS AND GROUND COVER PLANTS SHALL BE SPACED IN ACCORDANCE WITH THE DRAWINGS, LANDSCAPE DETAILS AND AS INDICATED ON THE PLANT LIST.

13.12. TREE GUYING AND BRACING SHALL BE INSTALLED BY THE CONTRACTOR IN ACCORDANCE WITH THE PLANS TO INSURE STABILITY AND MAINTAIN TREES IN A PLUMB AND UPRIGHT POSITION.

13.13. FAILURE TO FOLLOW THE ABOVE PLANTING PROCEDURE SHALL MAKE THE CORRECTIVE MEASURES THE RESPONSIBILITY OF THE CONTRACTOR.

14. LAWN SODDING

14.1. THE WORK CONSISTS OF LAWN BED PREPARATION, SOIL PREPARATION, AND SODDING NECESSARY TO PRODUCE A TURF GRASS LAWN ACCEPTABLE TO THE OWNER.

14.2. ALL AREAS THAT ARE TO BE SODDED SHALL BE CLEARED OF ANY ROUGH GRASS, WEEDS, AND DEBRIS TO A MINIMUM DEPTH OF THREE (3) INCHES. PROVIDE ONE (1) INCH OF TOPSOIL ACROSS ENTIRE LAWN BED AND MIX THROUGHLY INTO TOP FOUR (4) INCHES OF SOIL TO BRING THE GROUND TO AN EVEN GRADE. THE ENTIRE SURFACE SHALL BE ROLLED WITH A ROLLER WEIGHING NOT MORE THAN ONE-HUNDRED (100) POUNDS PER FOOT OF WIDTH. DURING THE ROLLING, ALL DEPRESSIONS CAUSED BY SETTLEMENT SHALL BE FILLED WITH ADDITIONAL TOPSOIL AND THE SURFACE SHALL BE REGRADED AND ROLLED UNTIL PRESENTING A SMOOTH AND EVEN FINISH TO THE REQUIRED GRADE.

14.3. HAND RAKE LAWN BED UNTIL ALL BUMPS AND DEPRESSIONS ARE REMOVED. WET PREPARED AREA THOROUGHLY.

14.4. SOD ALL AREAS THAT ARE NOT PAVED OR PLANTED AS DESIGNATED ON THE DRAWINGS WITHIN THE CONTRACT LIMITS, UNLESS SPECIFICALLY NOTED OTHERWISE.

14.5. THE SOD SHALL BE CERTIFIED TO MEET FLORIDA STATE PLANT BOARD SPECIFICATIONS, ABSOLUTELY TRUE TO VARIETAL TYPE, AND FREE FROM WEEDS, FUNGUS, INSECTS AND DISEASE OF ANY KIND.

14.6. SOD PANELS SHALL BE LAID TIGHTLY TOGETHER SO AS TO MAKE A SOLID SODDED LAWN AREA. SOD SHALL BE LAID UNIFORMLY AGAINST THE EDGES OF ALL CURBS AND OTHER HARDSCAPE ELEMENTS, PAVED AND PLANTED AREAS.

14.7. IMMEDIATELY FOLLOWING SOD LAYING, ROLL LAWN AREAS WITH A LAWN ROLLER AND THEN THOROUGHLY IRRIGATED.

14.8. IF, IN THE OPINION OF THE OWNER, TOP-DRESSING IS NECESSARY AFTER ROLLING TO FILL THE VOIDS BETWEEN THE SOD PANELS AND TO EVEN OUT INCONSISTENCIES IN THE SOD, CLEAN SAND, AS APPROVED BY THE OWNER'S REPRESENTATIVE, SHALL BE UNIFORMLY SPREAD OVER THE ENTIRE SURFACE OF THE SOD AND THOROUGHLY WATERED IN. FERTILIZE INSTALLED SOD AS ALLOWED BY PROPERTY'S JURISDICTIONAL AUTHORITY.

14.9. DURING DELIVERY, PRIOR TO, AND DURING THE PLANTING OF THE LAWN AREAS, THE SOD PANELS SHALL AT ALL TIMES BE PROTECTED FROM EXCESSIVE DRYING AND UNNECESSARY EXPOSURE OF THE ROOTS TO THE SUN. ALL SOD SHALL BE STACKED SO AS NOT TO BE DAMAGED BY EXCESSIVE HEAT AND MOISTURE.

14.10. WITHIN THE CONTRACT LIMITS, PRODUCE AND MAINTAIN A DENSE, WELL ESTABLISHED LAWN. THE CONTRACTOR SHALL BE RESPONSIBLE FOR THE REPAIR AND RE-SODDING OF ALL ERODED, SUNKEN OR BARE SPOTS UNTIL CERTIFICATION OF ACCEPTANCE BY THE OWNER'S REPRESENTATIVE. REPAIRED SODDING SHALL BE ACCOMPLISHED AS IN THE ORIGINAL WORK (INCLUDING REGRADING IF NECESSARY).

15. CLEANUP

15.1. UPON COMPLETION OF ALL PLANTING WORK AND BEFORE FINAL ACCEPTANCE, REMOVE ALL MATERIAL, EQUIPMENT, AND DEBRIS RESULTING FROM HIS WORK. ALL PAVED AREAS SHALL BE CLEANED AND THE SITE LEFT IN A NEAT AND ACCEPTABLE CONDITION AS APPROVED BY THE OWNER'S REPRESENTATIVE.

16. PLANT MATERIAL MAINTENANCE

16.1. ALL PLANT MATERIAL SHALL BE MAINTAINED BY WATERING, CULTIVATING, SPRAYING, AND ALL OTHER OPERATIONS (SUCH AS RE-STAKING OR REPAIRING GUY SUPPORTS) AS NECESSARY TO INSURE HEALTHY AND VIGOROUS GROWING CONDITIONS BY THE CONTRACTOR UPON DELIVERING TO THE SITE AND UNTIL FINAL ACCEPTANCE OF WORK.

17. FINAL INSPECTION AND ACCEPTANCE OF WORK

17.1. ALL PLANT BEDS SHALL BE KEPT FREE OF NOXIOUS WEEDS UNTIL FINAL ACCEPTANCE OF WORK. PRIOR TO FINAL INSPECTION, TREAT ALL PLANTING BEDS WITH AN APPROVED PRE-EMERGENT HERBICIDE PER MANUFACTURER RECOMMENDATIONS. (AS ALLOWED BY JURISDICTIONAL AUTHORITY)

17.2. PROVIDE WATERING/IRRIGATION SCHEDULE FOR ALL PLANT MATERIAL TO OWNER. OBSERVE ALL APPLICABLE WATERING RESTRICTIONS AS SET FORTH BY THE PROPERTY'S JURISDICTIONAL AUTHORITY.

17.3. UPON COMPLETION OF ALL WORK, A FINAL INSPECTION SHALL BE PERFORMED BY THE OWNER AND/OR OWNER'S REPRESENTATIVE. ALL PLANTING, CONSTRUCTION AND ALL OTHER INCIDENTAL WORK PERTAINING TO THIS CONTRACT SHALL BE INSPECTED FOR COMPLIANCE WITH THE CONTRACT DOCUMENTS. ANY ITEMS FOUND TO NOT BE IN COMPLIANCE SHALL BE CORRECTED AT THE COST OF THE CONTRACTOR.

18. WARRANTY

18.1. THE LIFE AND SATISFACTORY CONDITION OF ALL PLANT MATERIAL INSTALLED BY THE LANDSCAPE CONTRACTOR SHALL BE WARRANTED BY THE CONTRACTOR FOR A MINIMUM OF ONE (1) CALENDAR YEAR COMMENCING AT THE TIME OF CERTIFICATION AND ACCEPTANCE OF THE WORK BY THE OWNER AND/OR OWNER'S REPRESENTATIVE.

18.2. ANY PLANT NOT FOUND IN A HEALTHY GROWING CONDITION THROUGHOUT THE WARRANTY PERIOD SHALL BE REMOVED FROM THE SITE AND REPLACED AS SOON AS WEATHER CONDITIONS PERMIT. ALL REPLACEMENTS SHALL BE PLANTS OF THE SAME KIND AND SIZE AS SPECIFIED IN THE PLANT LIST. THEY SHALL BE FURNISHED, PLANTED AND MULCHED AS SPECIFIED AT NO ADDITIONAL COST TO THE OWNER. ANY REPLACED PLANT MATERIAL SHALL BE SUBJECT TO A NEW ONE (1) YEAR WARRANTY.

18.3. IN THE EVENT THE OWNER DOES NOT CONTRACT WITH THE CONTRACTOR FOR LANDSCAPE AND IRRIGATION MAINTENANCE, THE CONTRACTOR SHOULD VISIT THE PROJECT SITE PERIODICALLY DURING THE ONE (1) YEAR WARRANTY PERIOD TO EVALUATE MAINTENANCE PROCEDURES BEING PERFORMED BY THE OWNER. CONTRACTOR SHALL NOTIFY THE OWNER IN WRITING OF MAINTENANCE PROCEDURES OR CONDITIONS WHICH THREATEN VIGOROUS AND HEALTHY PLANT GROWTH.

19. ABBREVIATIONS

B&B -	BALLED AND BURLAPPED
BR -	BARE ROOT
CAL -	CALIPER
CT -	CLEAR TRUNK
DBH -	DIAMETER AT BREAST HEIGHT
FG -	FIELD GROWN
FTG -	FULL TO GROUND
GW -	GREY WOOD
HO -	HARDENED OFF
OA -	OVERALL HEIGHT
RPG -	ROOTS PLUS GROWER

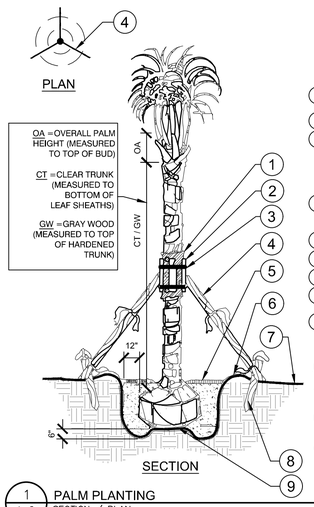

1. 5 LAYERS OF BURLAP TO PROTECT TRUNK.
2. FIVE 2" X 4" X 18" WOOD BATTENS.
3. SECURE BATTENS WITH 2- 3/4" CARBON STEEL BANDS TO HOLD BATTENS IN PLACE. NO NAILS SHALL BE DRIVEN INTO PALM. HEIGHT OF BATTENS SHALL BE LOCATED IN RELATION TO THE HEIGHT OF THE PALM FOR ADEQUATE BRACING.
4. (3) 2"X4"X8' SUPPORTS. NAIL (DRILL AN NAIL IF NECESSARY) TO BATTENS AND 2" 4" STAKES. STAIN DARK BROWN.
5. 3" SPECIFIED MULCH
6. BERM SOIL TO HOLD WATER.
7. FINISH GRADE
8. 2X4X24" (MIN) P.T. WOOD STAKES (TYP.) NAIL TO SUPPORT POLES.
9. PREPARED PLANTING SOIL AS SPECIFIED. (SEE LANDSCAPE NOTES).

NOTES:

A. FINAL TREE STAKING DETAILS AND PLACEMENT TO BE APPROVED BY OWNER.

B. ALL TREE STAKING IS TO BE WITHIN MULCH BED AREA OUTSIDE TREE PIT.

C. CONTRACTOR SHALL ASSURE PERCOLATION OF ALL PLANTING PITS PRIOR TO INSTALLATION - REFER TO POOR DRAINAGE CONDITION DETAIL.

1 / L-2 PALM PLANTING SECTION / PLAN — NTS

P-BA2-11

GROUNDWATER / DEWATERING NOTE:
THE PRESENCE OF GROUNDWATER SHOULD BE ANTICIPATED ON THIS PROJECT. CONTRACTOR'S BID SHALL INCLUDE CONSIDERATION FOR THIS ISSUE. WHEN PERFORMING GRADING OPERATIONS DURING PERIODS OF WET WEATHER, PROVIDE ADEQUATE DEWATERING, DRAINAGE AND GROUND WATER MANAGEMENT TO CONTROL MOISTURE OF SOILS.

811 KNOW WHAT'S BELOW. ALWAYS CALL 811 BEFORE YOU DIG. It's fast. It's free. It's the law. www.callsunshine.com

No.	REVISIONS	DATE	BY

Kimley»Horn
© 2022 KIMLEY-HORN AND ASSOCIATES, INC.
100 2ND AVENUE SOUTH, SUITE 105-N, ST. PETERSBURG, FL 33701
PHONE: 727-547-3999
WWW.KIMLEY-HORN.COM REGISTRY NO. 35106

KHA PROJECT 148400067
DATE FEB 2022
SCALE AS SHOWN
DESIGNED BY KHA
DRAWN BY JJB
CHECKED BY JLD

Manatee County FLORIDA

BAYSHORE YACHT BASIN FORCE MAIN AND LIFT STATION REPLACEMENT

MANATEE COUNTY FL

LICENSED PROFESSIONAL
JENNIFER L. DAOULAS, PLA
FL LICENSE NUMBER 6667369
DATE:

LANDSCAPE NOTES AND DETAILS

SHEET NUMBER
L-1

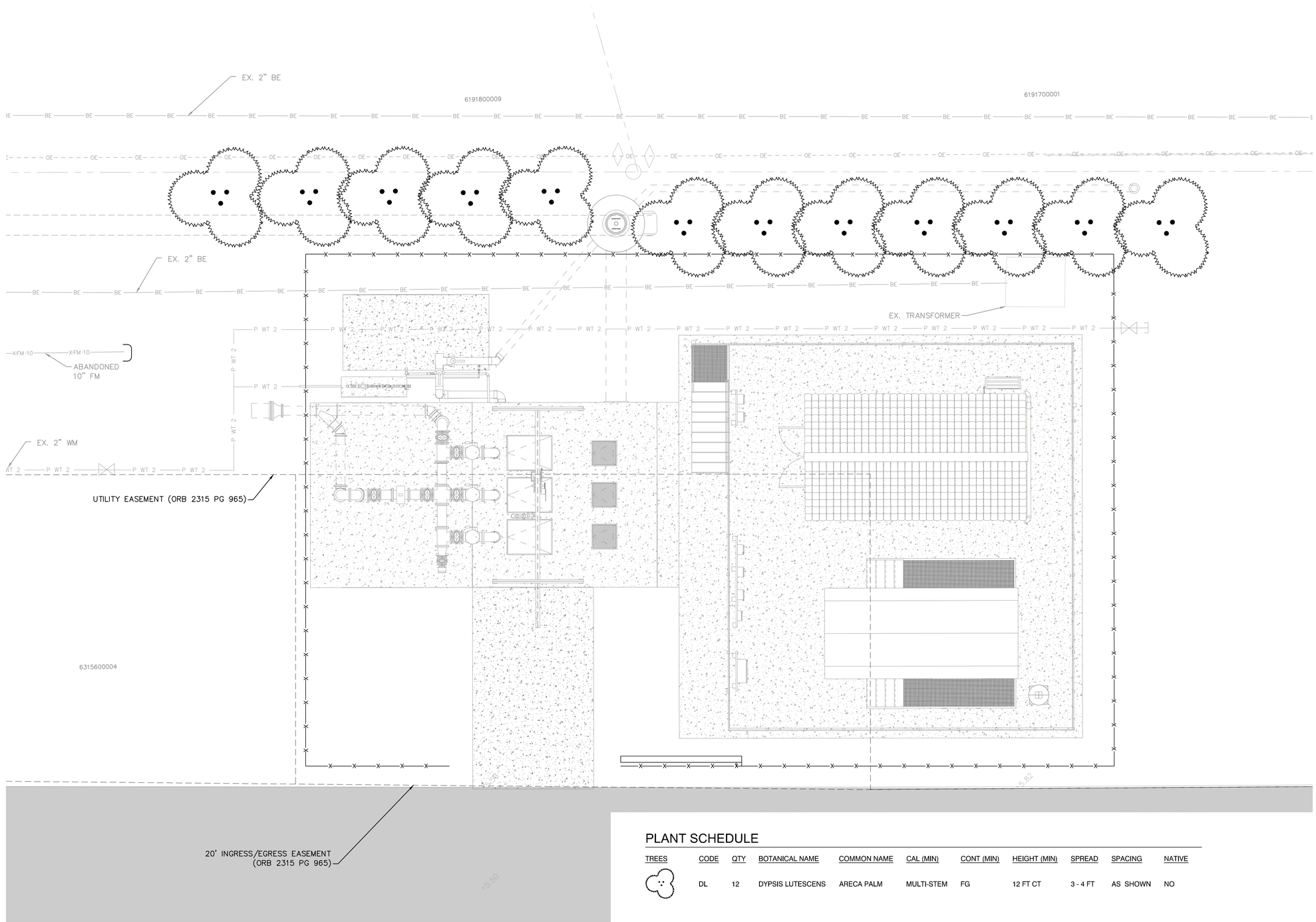

PLANT SCHEDULE

TREES	CODE	QTY	BOTANICAL NAME	COMMON NAME	CAL (MIN)	CONT (MIN)	HEIGHT (MIN)	SPREAD	SPACING	NATIVE
	DL	12	DYPSIS LUTESCENS	ARECA PALM	MULTI-STEM	FG	12 FT CT	3 - 4 FT	AS SHOWN	NO

GROUNDWATER / DEWATERING NOTE:
THE PRESENCE OF GROUNDWATER SHOULD BE ANTICIPATED ON THIS PROJECT. CONTRACTOR'S BID SHALL INCLUDE CONSIDERATION FOR THIS ISSUE. WHEN PERFORMING GRADING OPERATIONS DURING PERIODS OF WET WEATHER, PROVIDE ADEQUATE DEWATERING, DRAINAGE AND GROUND WATER MANAGEMENT TO CONTROL MOISTURE OF SOILS.

811 KNOW WHAT'S BELOW. ALWAYS CALL 811 BEFORE YOU DIG. It's fast. It's free. It's the law. www.callsunshine.com

This document, together with the concepts and designs presented herein, as an instrument of service, is intended only for the specific purpose and client for which it was prepared. Reuse of and improper reliance on this document without written authorization and adaptation by Kimley-Horn and Associates, Inc. shall be without liability to Kimley-Horn and Associates, Inc.

No.	REVISIONS	DATE	BY

Kimley»Horn

© 2022 KIMLEY-HORN AND ASSOCIATES, INC.

100 2ND AVENUE SOUTH, SUITE 105-N, ST. PETERSBURG, FL 33701
PHONE: 727-547-3999
WWW.KIMLEY-HORN.COM REGISTRY NO. 35106

KHA PROJECT 148400067
DATE FEB 2022
SCALE AS SHOWN
DESIGNED BY KHA
DRAWN BY JJB
CHECKED BY JLD

Manatee County FLORIDA

BAYSHORE YACHT BASIN FORCE MAIN AND LIFT STATION REPLACEMENT

MANATEE COUNTY FL

LICENSED PROFESSIONAL
JENNIFER L. DAOULAS, PLA
FL LICENSE NUMBER 6667369
DATE:

LANDSCAPE PLAN

SHEET NUMBER
L-2

This documents, together with the concepts and designs presented herein, as an instrument of service, is intended only for the specific purpose and client for which it was prepared. Reuse of and improper reliance on this document without written authorization and adaptation by Kimley-Horn and Associates, Inc. shall be without liability to Kimley-Horn and Associates, Inc.

IRRIGATION SPECIFICATIONS

1. SCOPE OF WORK

1.1. THE WORK CONSISTS OF: FURNISHING ALL LABOR, MATERIALS, EQUIPMENT, TOOLS, TRANSPORTATION, AND ANY OTHER APPURTENANCES NECESSARY FOR THE COMPLETION OF THIS PROJECT AS SHOWN ON THESE PLANS.

1.2. INSTALL THE IRRIGATION SYSTEM TO PROVIDE 100% UNIFORM COVERAGE INCLUDING ANY CHANGES MADE IN THE LAYOUT DUE TO FIELD CONDITIONS. ALL FIELD CHANGES SHALL BE IN ACCORDANCE WITH THESE PLANS. ANY SYSTEMS THAT REQUIRE FIELD ADJUSTMENT TO PROVIDE FULL AND UNIFORM COVERAGE SHALL BE MADE PRIOR TO FINAL ACCEPTANCE AT THE DIRECTION OF THE OWNER'S REPRESENTATIVE AT NO ADDITIONAL COST.

1.3. SECURE ANY AND ALL NECESSARY PERMITS FOR THE WORK PRIOR TO COMMENCEMENT OF OPERATIONS ON-SITE. SEND COPIES OF THE PERMIT(S) TO THE OWNER'S REPRESENTATIVE. FOR WORK LOCATED IN THE R.O.W., CONFORM TO THE STANDARDS AND SPECIFICATIONS OF THE AGENCY HAVING JURISDICTION.

1.4. WORK SHALL BE COORDINATED WITH OTHER TRADES TO PREVENT CONFLICTS.

2. PROTECTION OF EXISTING AND PROPOSED SITE ELEMENTS

2.1. ALL EXISTING SITE ITEMS, ALREADY COMPLETED OR ESTABLISHED AND DESIGNATED TO REMAIN SHALL BE PROTECTED FROM DAMAGE BY THE CONTRACTOR UNLESS OTHERWISE SPECIFIED. ALL DAMAGE RESULTING FROM THE CONTRACTOR'S WORK SHALL BE REPAIRED OR REPLACED TO THE SATISFACTION OF THE OWNER, AT NO COST TO THE OWNER.

2.2. MAINTAIN ALL NECESSARY BMP DEVICES THROUGHOUT THE DURATION OF ALL CONSTRUCTION ACTIVITIES.

2.3. WHERE APPLICABLE, SUBMIT A DETAILED PROJECT SPECIFIC WORK ZONE TRAFFIC CONTROL PLAN IN ACCORDANCE WITH THE APPROPRIATE REGULATORY AGENCY STANDARDS UNLESS THE WORK REQUIRES NOTHING MORE THAN A DIRECT APPLICATION OF FDOT STANDARD PLANS FOR ROAD AND BRIDGE CONSTRUCTION, INDEX 102-600.

2.4. LOCATE ALL UTILITIES, WHETHER PUBLIC OR PRIVATE, PRIOR TO CONSTRUCTION ACTIVITIES. THE INFORMATION AND DATA SHOWN WITH RESPECT TO UTILITIES IS APPROXIMATE. THE OWNER AND DESIGN PROFESSIONAL SHALL NOT BE RESPONSIBLE FOR THE ACCURACY AND COMPLETENESS OF ANY SUCH INFORMATION OR DATA. THE CONTRACTOR SHALL HAVE FULL RESPONSIBILITY FOR; REVIEWING AND CHECKING ALL SUCH INFORMATION AND DATA; LOCATING ALL UTILITIES PRIOR TO CONSTRUCTION; THE SAFETY AND PROTECTION THEREOF; AND REPAIRING ANY DAMAGE RESULTING FROM THE WORK. THE COST OF ALL WILL BE CONSIDERED AS HAVING BEEN INCLUDED IN THE CONTRACT PRICE. NOTIFY ANY AFFECTED UTILITY COMPANIES OR AGENCIES IN WRITING AT LEAST 48 HOURS PRIOR TO BEGINNING CONSTRUCTION. NOTIFY THE LANDSCAPE ARCHITECT IN WRITING WHEN ANY CONFLICT BETWEEN UTILITIES AND THESE PLANS EXIST PRIOR TO INSTALLATION.

3. SUBMITTALS

3.1. SUBMIT FULL AND COMPLETE SHOP DRAWINGS OF ALL IRRIGATION EQUIPMENT AS SHOWN ON THESE PLANS TO OWNER'S REPRESENTATIVE FOR APPROVAL PRIOR TO INSTALLATION.

3.2. SUBMIT PRODUCT DATA SHEETS FOR ALL IRRIGATION EQUIPMENT TO BE INSTALLED TO OWNER'S REPRESENTATIVE FOR APPROVAL PRIOR TO INSTALLATION. THE IRRIGATION SYSTEM, AS SHOWN ON THESE PLANS, HAS BEEN DESIGNED AND CALCULATED WITH THE EQUIPMENT AS SPECIFIED. SUBMIT ANY REQUEST FOR PRODUCT SUBSTITUTION(S) IN WRITING. IF APPROVED, THE CONTRACTOR SHALL BE RESPONSIBLE FOR ANY NECESSARY MODIFICATION(S) AS A RESULT OF PRODUCT SUBSTITUTIONS TO THE IRRIGATION SYSTEM IN THE SHOP DRAWINGS TO MEET THE DESIGN INTENT OF THESE PLANS.

4. EQUIPMENT LIST

4.1. ALL QUANTITIES ARE PROVIDED FOR CONVENIENCE ONLY. CONFIRM ALL QUANTITIES PER PLAN PRIOR TO BIDDING AND CONSTRUCTION.

5. POINT OF CONNECTION

5.1. FIELD VERIFY ALL POINT OF CONNECTION SOURCE INFORMATION INCLUDING STATIC PSI AND GPM AVAILABLE PRIOR TO CONSTRUCTION. NOTIFY OWNER'S REPRESENTATIVE IN WRITING IF DISCREPANCIES BETWEEN THE FLOW AND PRESSURE AS LISTED IN THE CRITICAL ANALYSIS AND THE FIELD CONDITIONS EXIST.

5.2. COORDINATE INSTALLATION OF ANY METERS AND BACKFLOW ASSEMBLIES WITH THE AGENCY HAVING JURISDICTION AND OWNER'S REPRESENTATIVE.

6. MAINLINE INSTALLATION

6.1. INSTALL ALL MAINLINES AND LATERALS UNDER PAVEMENT WITHIN SLEEVES. WHERE VALVE CONTROL LINES PASS THROUGH A SLEEVE WITH OTHER MAIN OR LATERAL LINES, CONTAIN WIRES WITHIN A SEPARATE, SMALLER CONDUIT.

6.2. INSTALL COLOR CODED METAL DETECTABLE MARKING TAPE WHICH CLEARLY NOTES: "CAUTION: IRRIGATION LINE BURIED BELOW" ABOVE THE FULL LENGTH OF THE IRRIGATION MAINLINE.

6.3. WHERE MAINLINE RUNS PARALLEL TO PAVEMENT OR CURBING, OFFSET THE MAINLINE 24" FROM THE EDGE OF PAVEMENT OR CURB.

6.4. PERFORM HYDROSTATIC PRESSURE TESTING AS FOLLOWS:

6.4.1. AFTER FLUSHING, AND THE INSTALLATION OF VALVES CONDUCT THE FOLLOWING TESTS IN THE SEQUENCE LISTED BELOW. FURNISH ALL EQUIPMENT; MATERIALS AND LABOR NECESSARY TO PERFORM THE TESTS. CONDUCT ALL TESTS IN THE PRESENCE OF THE OWNER'S REPRESENTATIVE. NOTIFY THE OWNER'S REPRESENTATIVE FORTY-EIGHT (48) HOURS IN ADVANCE OF TESTING.

6.4.2. PERFORM WATER PRESSURE TESTS ON ALL PRESSURE MAIN LINES BEFORE ANY COUPLINGS, FITTINGS, VALVES AND THE LIKE ARE CONCEALED.

6.4.3. IMMEDIATELY PRIOR TO TESTING, PURGE ALL IRRIGATION LINES OF ALL ENTRAPPED AIR OR DEBRIS BY ADJUSTING CONTROL VALVES AND INSTALLING TEMPORARY CAPS FORCING WATER AND DEBRIS TO BE DISCHARGED FROM A SINGLE OUTLET.

6.4.4. TEST ALL PRESSURE MAIN LINE AT 150 PSI FOR A MINIMUM OF FOUR (4) HOURS WITH AN ALLOWABLE LOSS OF 5 PSI. PRESSURE AND GAUGES SHALL BE READ IN PSI, AND CALIBRATED SUCH THAT ACCURATE DETERMINATION OF POTENTIAL PRESSURE LOSS CAN BE ASCERTAINED.

6.4.5. RE-TEST AS REQUIRED UNTIL THE SYSTEM MEETS THE REQUIREMENTS. REPAIR ANY LEAKS, WHICH OCCUR DURING TEST PERIOD, IMMEDIATELY FOLLOWING THE TEST.

6.4.6. PROVIDE DOCUMENTATION STATING THE WEATHER CONDITIONS, DATE, THE START TIME AND INITIAL WATER PRESSURE READINGS, THE FINISH TIME AND FINAL WATER PRESSURE READINGS AND THE TYPE OF EQUIPMENT USED TO PERFORM THE TEST. THE DOCUMENTATION MUST BE SIGNED BY A WITNESS ACCEPTABLE TO THE OWNER, VERIFYING ALL OF THE ABOVE-MENTIONED CONDITIONS.

6.4.7. SUBMIT A WRITTEN REPORT OF THE PRESSURE TESTING RESULTS WITH THE OTHER ABOVE REQUIRED INFORMATION TO THE OWNER'S REPRESENTATIVE FOR APPROVAL.

7. IRRIGATION VALVES AND WIRING

7.1. LOCATE ALL VALVES, SPLICES WITHIN CONTROL LINES, QUICK COUPLERS, AND HOSE BIBBS WITHIN VALVE BOXES. PROVIDE PURPLE VALVE BOX LIDS FOR SYSTEMS UTILIZING A NON-POTABLE WATER SOURCE.

7.2. NUMBER THE TOP OF ALL VALVE BOX LIDS WITH MINIMUM 1" HEIGHT BLACK LETTERS TO CORRESPOND TO THE VALVE DESIGNATIONS.

7.3. WHEN POSSIBLE, LOCATE ALL VALVES IN PLANTING BEDS A MINIMUM OF 24" FROM BACK OF CURB OR EDGE OF PAVEMENT, UNLESS OTHERWISE NOTED.

7.4. SEPARATE IRRIGATION ZONES FOR HIGH AND LOW WATER USE REQUIREMENTS AND OPERATED ON DIFFERENT WATERING CYCLES. AT NO TIME SHALL MULTIPLE IRRIGATION HEAD TYPES BE LOCATED ON THE SAME VALVE UNLESS NOTED OTHERWISE.

7.5. INSTALL ALL DRIP ZONES WITH A FLUSH VALVE AND AIR RELIEF VALVE. IN THE EVENT THAT A DRIP ZONE HAS MORE THAN ONE HIGH OR LOW POINT, MORE THAN ONE AIR RELIEF VALVE OR FLUSH VALVE WILL BE REQUIRED FOR THAT ZONE.

7.6. FOLLOW MANUFACTURER'S SPECIFICATIONS FOR ALL WIRING FOR CONNECTION OF THE VALVES TO THE CONTROLLER. ALL WIRE RUNS SHALL BE CONTINUOUS WITH SPLICING OCCURRING IN VALVE BOXES ONLY. WIRE CONNECTIONS SHALL BE MADE USING DBR/Y-6 CONNECTIONS OR APPROVED EQUAL.

7.7. INSTALL VALVE CONTROL WIRING IN THE SAME TRENCH AS THE MAINLINE WHERE PRACTICAL.

7.8. FOR NON TWO-WIRE SYSTEMS, RUN TWO (2) SPARE VALVE CONTROL WIRES FROM THE CONTROLLER ALONG THE ENTIRE MAINLINE TO LAST REMOTE CONTROLLED VALVE ON EACH AND EVERY LEG OF MAINLINE.

8. PIPES AND SLEEVING

8.1. DO NOT INSTALL IRRIGATION SYSTEM THROUGH PRESERVED PLANT COMMUNITIES, DRIPLINE OF EXISTING TREES, OR WITHIN WETLANDS UNLESS SPECIFICALLY NOTED OTHERWISE.

8.2. LOCATE ALL IRRIGATION LINES WITHIN LANDSCAPED AREAS WHENEVER POSSIBLE. ALL LINES UNDER PAVEMENT MUST BE SLEEVED.

8.3. SIZE ALL PIPE SLEEVES TWO PIPE SIZES GREATER THAN THE PIPE / CUMULATIVE SUM OF THE PIPES IT CARRIES.

8.4. SLEEVES UNDER EXISTING PAVEMENT MUST BE DIRECTIONAL BORE UNLESS APPROVED BY OWNER IN WRITING.

8.5. SOLVENT CEMENTS SHALL COMPLY WITH ASTM D2564.

9. CONTROLLER AND SENSORS

9.1. COORDINATE WITH OWNER'S REPRESENTATIVE FOR FINAL CONTROLLER AND RAIN SENSOR LOCATIONS. THE CONTROLLER SHALL BE PLACED IN A LOCKING CABINET APPROPRIATE FOR ITS LOCATION. (INDOOR VS. OUTDOOR USE)

9.2. LOCATE THE AUTOMATIC RAIN SENSOR SHUTOFF DEVICE IN AN AREA THAT IS UNOBSTRUCTED BY TREES, ROOF OVERHANGS, OR ANY OTHER OVERHEAD OBJECT. THE SENSOR SHALL NOT BE PLACED WITHIN THE SPRAY ZONE OF ANY SPRINKLER HEAD, INCLUDING OFF-SITE IRRIGATION. CONTRACTOR SHALL LOCATE SENSOR WITHIN CLOSE PROXIMITY TO THE IRRIGATION CONTROLLER.

10. CLEANUP

10.1. UPON COMPLETION OF ALL WORK AND BEFORE FINAL ACCEPTANCE, REMOVE ALL MATERIAL, EQUIPMENT, AND DEBRIS RESULTING FROM HIS WORK. ALL PAVED AREAS SHALL BE CLEANED AND THE SITE LEFT IN A NEAT AND ACCEPTABLE CONDITION AS APPROVED BY THE OWNER'S REPRESENTATIVE.

11. AS-BUILT IRRIGATION PLANS

11.1. PROVIDE "AS-BUILT" DRAWINGS OF THE FINAL INSTALLATION TO OWNER'S REPRESENTATIVE PRIOR TO FINAL ACCEPTANCE OF WORK. INCLUDE THE FOLLOWING ON THE AS-BUILT DRAWINGS AT A MINIMUM:
- CONTROLLER LOCATION
- CONNECTION ASSEMBLY
- MAINLINE ROUTING
- PIPE SLEEVING
- VALVE(S)
- COLORIZED ZONING DIAGRAM

11.2. LOCATE ALL SLEEVES UTILIZED BY THE IRRIGATION CONTRACTOR WHETHER INSTALLED BY THE IRRIGATION CONTRACTOR OR NOT ON THE "AS-BUILT" DRAWINGS. THE DEPTH BELOW FINISH GRADE, TO THE NEAREST FOOT OF EACH END OF THE SLEEVE SHALL BE NOTED AT EACH SLEEVE LOCATION ON THE "AS-BUILT" DRAWINGS.

12. FINAL INSPECTION AND ACCEPTANCE OF WORK

12.1. MINIMIZE IRRIGATION OVERTHROW TO IMPERVIOUS AND NATURAL AREAS THROUGH FIELD ADJUSTMENTS TO INDIVIDUAL HEADS.

12.2. PROGRAM CONTROLLER TO IRRIGATE ALL ZONES WITHIN APPLICABLE WATERING WINDOWS AND PROVIDE WATERING SCHEDULE TO OWNER'S REPRESENTATIVE.

12.3. EQUIPMENT TO BE FURNISHED TO OWNER PRIOR TO ACCEPTANCE OF WORK:

- TWO (2) SETS OF KEYS FOR EACH AUTOMATIC CONTROLLER.
- TWO (2) 48 INCH TEE WRENCHES FOR OPERATING GATE VALVES (WHEN INSTALLED AS PART OF WORK).
- THREE (3) SETS OF SPECIAL TOOLS REQUIRED FOR REMOVING, DISASSEMBLING AND ADJUSTING EACH TYPE OF - SPRINKLER AND VALVE SUPPLIED ON THIS PROJECT.
- FIVE (5) EXTRA SPRINKLER HEADS, NOZZLES, SHRUB ADAPTERS, NOZZLE FILTER SCREENS, FOR EACH TYPE USED ON THE PROJECT.
- TWO (2) QUICK COUPLER KEYS TO MATCH MANUFACTURER TYPE OF QUICK COUPLER.

12.4. UPON COMPLETION OF ALL WORK, A FINAL INSPECTION SHALL BE PERFORMED BY THE OWNER AND/OR OWNER'S REPRESENTATIVE. THE IRRIGATION SYSTEM, CONSTRUCTION AND ALL OTHER INCIDENTAL WORK PERTAINING TO THIS CONTRACT SHALL BE INSPECTED FOR COMPLIANCE WITH THE CONTRACT DOCUMENTS. ANY ITEMS FOUND TO NOT BE IN COMPLIANCE SHALL BE CORRECTED AT NO COST TO THE OWNER.

13. WARRANTY

13.1. THE CONTRACTOR SHALL WARRANTEE ALL WORKMANSHIP AND MATERIALS FOR A PERIOD OF 1 YEAR FOLLOWING THE ACCEPTANCE OF THE WORK.

13.2. ANY PART OF THE IRRIGATION WORK THAT FAILS OR IS DEFECTIVE SHALL BE REPLACED OR RECONSTRUCTED AT NO COST TO THE OWNER INCLUDING BUT NOT LIMITED TO: RESTORING GRADES THAT HAVE SETTLED IN TRENCHES AND EXCAVATIONS RELATED TO THE WORK. RECONSTRUCTION SHALL INCLUDE ANY PLANTINGS, SOIL, MULCH OR OTHER PARTS OF THE CONSTRUCTED LANDSCAPE THAT MAY BE DAMAGED DURING THE REPAIR OR THAT RESULTS FROM SOIL SETTLEMENT.

13.3. THE DATE OF ACCEPTANCE OF THE WORK AND START OF THE GUARANTEE PERIOD SHALL BE DETERMINED BY THE OWNER, UPON THE FINDING THAT THE ENTIRE IRRIGATION SYSTEM IS INSTALLED AS DESIGNED AND SPECIFIED, AND FOUND TO BE OPERATING CORRECTLY, SUPPLYING WATER EVENLY TO ALL PLANTING AND/OR LAWN AREAS.

13.4. NEITHER THE FINAL ACCEPTANCE NOR ANY PROVISION IN THE CONTRACT DOCUMENTS SHALL RELIEVE THE CONTRACTOR OF RESPONSIBILITY FOR FAULTY MATERIALS OR WORKMANSHIP. REMEDY ANY DEFECTS WITHIN A PERIOD OF 7 DAYS (S) FROM THE DATE OF NOTIFICATION OF A DEFECT.

14. ABBREVIATIONS

GPM - GALLONS PER MINUTE
GPH - GALLONS PER HOUR
PSI - POUNDS PER SQUARE INCH

LATERAL PIPE SIZING REQUIREMENTS

MAXIMUM FLOW	MINIMUM PIPE SIZE
10 GPM	3/4"
16 GPM	1"
26 GPM	1-1/4"
35 GPM	1-1/2"
55 GPM	2"
80 GPM	2-1/2"
120 GPM	3"

PIPE SIZES ILLUSTRATED IN THE ABOVE CHART ARE MINIMUM ACCEPTABLE SIZES. PIPE SIZES INDICATED ON PLAN ARE FOR CONVENIENCE ONLY. FIELD SIZE ALL LATERAL PIPING TO KEEP ALL FRICTION LOSS VELOCITIES BELOW 5.0 FPS.

GROUNDWATER / DEWATERING NOTE:
THE PRESENCE OF GROUNDWATER SHOULD BE ANTICIPATED ON THIS PROJECT. CONTRACTOR'S BID SHALL INCLUDE CONSIDERATION FOR THIS ISSUE. WHEN PERFORMING GRADING OPERATIONS DURING PERIODS OF WET WEATHER, PROVIDE ADEQUATE DEWATERING, DRAINAGE AND GROUND WATER MANAGEMENT TO CONTROL MOISTURE OF SOILS.

811 KNOW WHAT'S BELOW ALWAYS CALL 811 BEFORE YOU DIG
It's fast. It's free. It's the law.
www.callsunshine.com

No.	REVISIONS	DATE	BY

Kimley»Horn
© 2022 KIMLEY-HORN AND ASSOCIATES, INC.
100 2ND AVENUE SOUTH, SUITE 105-N, ST. PETERSBURG, FL 33701
PHONE: 727-547-3999
WWW.KIMLEY-HORN.COM REGISTRY NO. 35106

KHA PROJECT 148400067
DATE FEB 2022
SCALE AS SHOWN
DESIGNED BY KHA
DRAWN BY JJB
CHECKED BY JLD

Manatee County FLORIDA

BAYSHORE YACHT BASIN FORCE MAIN AND LIFT STATION REPLACEMENT
MANATEE COUNTY FL

LICENSED PROFESSIONAL
JENNIFER L. DAOULAS, PLA
FL LICENSE NUMBER 6667369
DATE:

IRRIGATION NOTES

SHEET NUMBER
IR-1

This document, together with the concepts and designs presented herein, as an instrument of service, is intended only for the specific purpose and client for which it was prepared. Reuse of and improper reliance on this document without written authorization and adaptation by Kimley-Horn and Associates, Inc. shall be without liability to Kimley-Horn and Associates, Inc.

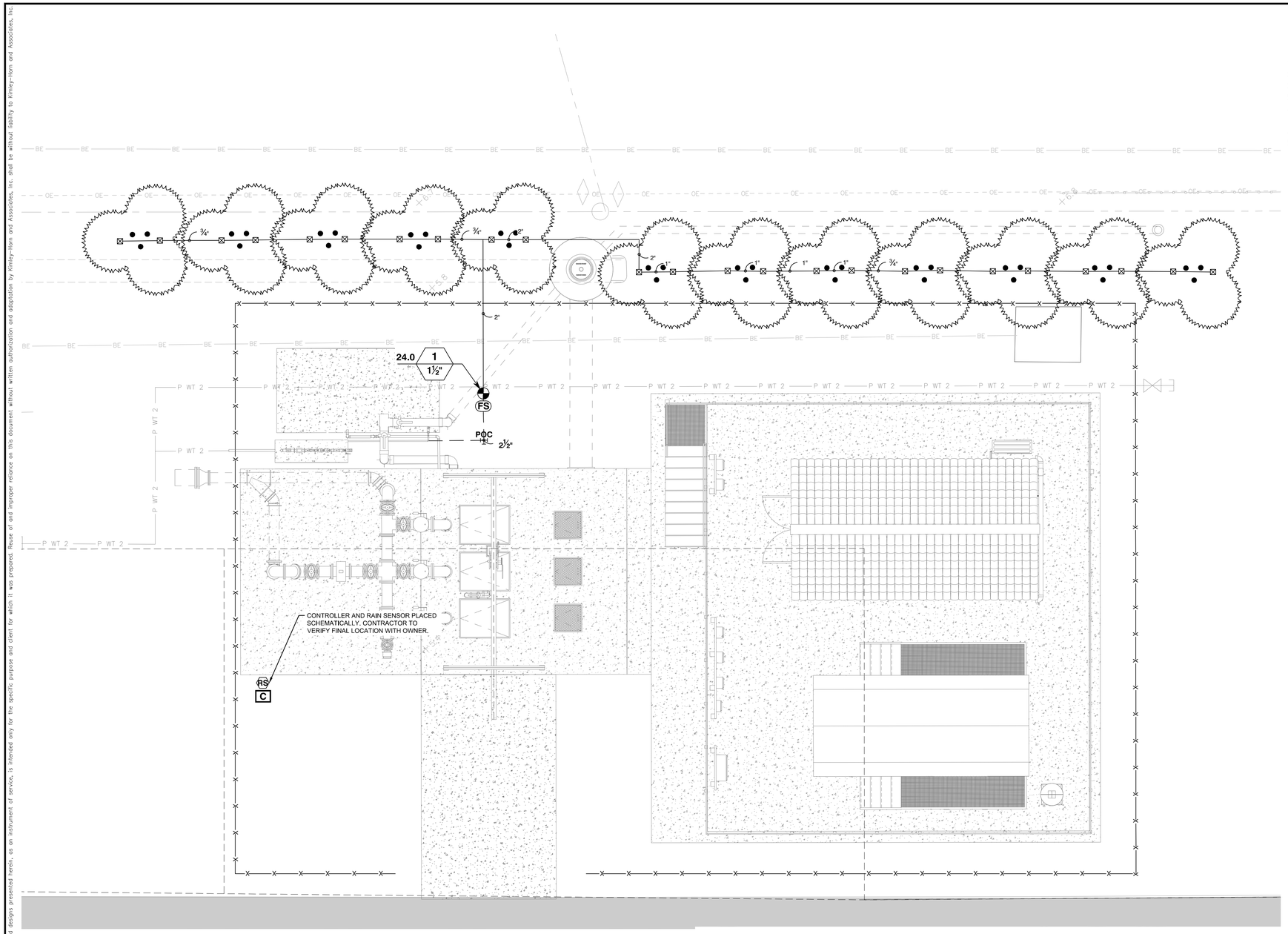

NOTES:
1. CONTRACTOR TO VERIFY PREFERRED EQUIPMENT WITH OWNER.
2. SYSTEM HAS BEEN DESIGNED ASSUMING AN AVAILABLE STATIC PRESSURE OF 40 PSI. CONTRACTOR TO VERIFY AVAILABLE GPM AND STATIC PRESSURE PRIOR TO INSTALLATION. NOTIFY THE LANDSCAPE ARCHITECT IF GPM AND/OR STATIC PRESSURE VARIES FROM DESIGN SPECIFICATIONS.

NORTH

GRAPHIC SCALE IN FEET
0 3 5 10

IRRIGATION SCHEDULE

SYMBOL	MANUFACTURER/MODEL/DESCRIPTION	QTY
360	RAIN BIRD 1804-SAM-1300AF FLOOD F FLOOD BUBBLER 4.0" POP-UP WITH CHECK VALVE, WITH A PA-80 ADAPTER.	24
SYMBOL	**MANUFACTURER/MODEL/DESCRIPTION**	**QTY**
	RAIN BIRD PEB-PRS-D 1", 1-1/2", 2" PLASTIC INDUSTRIAL VALVES. LOW FLOW OPERATING CAPABILITY, GLOBE CONFIGURATION. WITH PRESSURE REGULATOR MODULE.	1
C	RAIN BIRD ESP8LXMEF-LXMM-LXMMPED 8 STATION CAPABLE COMMERCIAL CONTROLLER. MOUNTED ON A POWDER-COATED METAL PEDESTAL. FLOW SENSING AND WATER MANAGEMENT CAPABILITIES. FLOW SENSING.	1
RS	RAIN BIRD RSD-BEX RAIN SENSOR, WITH METAL LATCHING BRACKET, EXTENSION WIRE.	1
FS	RAIN BIRD FS-200-P 2" FLOW SENSOR FOR USE WITH RAIN BIRD MAXICOM, SITECONTROL, AND ESP-LXD CENTRAL CONTROL SYSTEMS. PLASTIC (PVC) MODEL. SUGGESTED OPERATING RANGE OF 10.0 GPM TO 200.0 GPM. SENSORS SHOULD BE SIZED FOR FLOW RATHER THAN PIPE SIZE.	1
———	IRRIGATION LATERAL LINE: PVC SCHEDULE 40	114.0 L.F.
— — —	IRRIGATION MAINLINE: PVC SCHEDULE 40	9.1 L.F.

Valve Callout
- # — Valve Number
- # — Valve Flow
- #" — Valve Size

VALVE SCHEDULE

NUMBER	MODEL	SIZE	TYPE	GPM	PSI	PSI @ POC	PRECIP
1	RAIN BIRD PEB-PRS-D	1-1/2"	BUBBLER	24.00	15.45	15.46	4.35 in/h

CRITICAL ANALYSIS

Generated:	2021-10-08 12:36
P.O.C. NUMBER: 01	
Water Source Information:	
FLOW AVAILABLE	
Point of Connection Size:	2"
Flow Available:	84.89 gpm
PRESSURE AVAILABLE	
Static Pressure at POC:	40.00 PSI
Pressure Available:	40.00 psi
DESIGN ANALYSIS	
Maximum Station Flow:	24.00 gpm
Flow Available at POC:	84.89 gpm
Residual Flow Available:	60.89 gpm
Critical Station:	1
Design Pressure:	10.00 psi
Friction Loss:	1.51 psi
Fittings Loss:	0.16 psi
Elevation Loss:	0.00 psi
Loss through Valve:	3.78 psi
Pressure Req. at Critical Station:	15.45 psi
Loss for Fittings:	0.00 psi
Loss for Main Line:	0.01 psi
Loss for POC to Valve Elevation:	0.00 psi
Loss for Backflow:	0.00 psi
Critical Station Pressure at POC:	15.46 psi
Pressure Available:	40.00 psi
Residual Pressure Available:	24.54 psi

GROUNDWATER / DEWATERING NOTE:
THE PRESENCE OF GROUNDWATER SHOULD BE ANTICIPATED ON THIS PROJECT. CONTRACTOR'S BID SHALL INCLUDE CONSIDERATION FOR THIS ISSUE. WHEN PERFORMING GRADING OPERATIONS DURING PERIODS OF WET WEATHER, PROVIDE ADEQUATE DEWATERING, DRAINAGE AND GROUND WATER MANAGEMENT TO CONTROL MOISTURE OF SOILS.

811 KNOW WHAT'S BELOW. ALWAYS CALL 811 BEFORE YOU DIG. It's fast. It's free. It's the law. www.callsunshine.com

No.	REVISIONS	DATE	BY

Kimley»Horn
© 2022 KIMLEY-HORN AND ASSOCIATES, INC.
100 2ND AVENUE SOUTH, SUITE 105-N, ST. PETERSBURG, FL 33701
PHONE: 727-547-3999
WWW.KIMLEY-HORN.COM REGISTRY NO. 35106

KHA PROJECT 148400067
DATE FEB 2022
SCALE AS SHOWN
DESIGNED BY KHA
DRAWN BY JJB
CHECKED BY JLD

Manatee County FLORIDA

BAYSHORE YACHT BASIN FORCE MAIN AND LIFT STATION REPLACEMENT

MANATEE COUNTY FL

LICENSED PROFESSIONAL
JENNIFER L. DAOULAS, PLA
FL LICENSE NUMBER 6667369
DATE:

IRRIGATION PLAN

SHEET NUMBER
IR-2

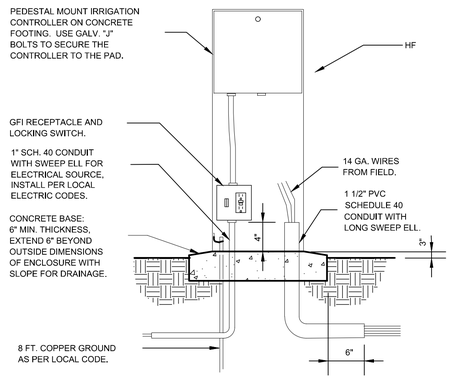

1 / IR-3 IRRIGATION CONTROLLER - PEDESTAL MOUNT
SECTION NTS

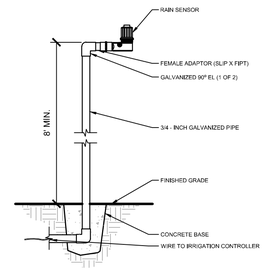

3 / IR-3 RAIN SENSOR - POLE MOUNT
SECTION NTS

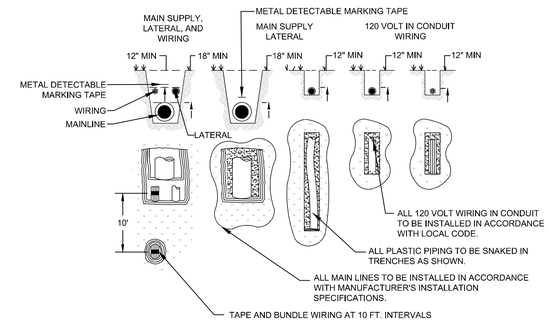

4 / IR-3 TYPICAL TRENCHING
SECTION NTS

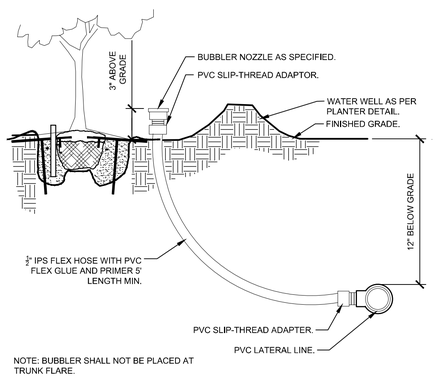

5 / IR-3 TYPICAL BUBBLER
SECTION NTS

GROUNDWATER / DEWATERING NOTE:
THE PRESENCE OF GROUNDWATER SHOULD BE ANTICIPATED ON THIS PROJECT. CONTRACTOR'S BID SHALL INCLUDE CONSIDERATION FOR THIS ISSUE. WHEN PERFORMING GRADING OPERATIONS DURING PERIODS OF WET WEATHER, PROVIDE ADEQUATE DEWATERING, DRAINAGE AND GROUND WATER MANAGEMENT TO CONTROL MOISTURE OF SOILS.

811 KNOW WHAT'S BELOW ALWAYS CALL 811 BEFORE YOU DIG
It's fast. It's free. It's the law.
www.callsunshine.com

This document, together with the concepts and designs presented herein, as an instrument of service, is intended only for the specific purpose and client for which it was prepared. Reuse of and improper reliance on this document without written authorization and adaptation by Kimley-Horn and Associates, Inc. shall be without liability to Kimley-Horn and Associates, Inc.

No.	REVISIONS	DATE	BY

Kimley»Horn
© 2022 KIMLEY-HORN AND ASSOCIATES, INC.
100 2ND AVENUE SOUTH, SUITE 105-N, ST. PETERSBURG, FL 33701
PHONE: 727-547-3999
WWW.KIMLEY-HORN.COM REGISTRY NO. 35106

KHA PROJECT 148400067
DATE FEB 2022
SCALE AS SHOWN
DESIGNED BY KHA
DRAWN BY JJB
CHECKED BY JLD

Manatee County FLORIDA
BAYSHORE YACHT BASIN FORCE MAIN AND LIFT STATION REPLACEMENT
MANATEE COUNTY FL

LICENSED PROFESSIONAL
JENNIFER L. DAOULAS, PLA
FL LICENSE NUMBER 6667369
DATE:

IRRIGATION DETAILS

SHEET NUMBER
IR-3

This document, together with the concepts and designs presented herein, as an instrument of service, is intended only for the specific purpose and client for which it was prepared. Reuse of and improper reliance on this document without written authorization and adaptation by Kimley-Horn and Associates, Inc. shall be without liability to Kimley-Horn and Associates, Inc.

CONDUIT RUN EXPOSED

CONDUIT OR DUCTBANK RUN CONCEALED UNDERGROUND

CONDUIT RUN EXPOSED, BELOW ELEVATED SLAB

G — GROUNDING ELECTRODE CONDUCTOR

LP — LIGHTNING PROTECTION CONDUCTOR

CONDUIT STUB OUT AND CAP

GROUND ROD

JUNCTION BOX

JUNCTION BOX WITH FLEXIBLE CONNECTION

480V
15 KVA, 1*
120/240V

TRANSFORMER, 480V INDICATED PRIMARY VOLTAGE, 120/240V INDICATES SECONDARY VOLTAGE, 15 KVA REPRESENTS POWER RATING, AND 1* INDICATES SINGLE PHASE (THREE PHASE IF NOT INDICATED)

3P
30A

THERMAL MAGNETIC CIRCUIT BREAKER WITH NUMBER OF POLES AND AMPERE RATING

XX

COMBINATION MAGNETIC STARTER WITH CONTROL POWER TRANSFORMER (SIZED FOR LOAD). LETTERS INDICATE TYPE :
N – NON-REVERSING
R – REVERSING
2S – TWO-SPEED
C – CONTACTOR
SS – SOLID STATE SOFT START

XXX

XXX DEVICE	DESCRIPTION
HLS	HIGH LEVEL SWITCH
HOA	HAND-OFF-AUTO
LD	LEAK DETECTION
LLS	LOW LEVEL SWITCH
LOR	LOCAL-OFF-REMOTE
PB	PUSH BUTTON
RTU	REMOTE TERMINAL UNIT
SS	SOFT STARTER
SS/B	SOFT START OR BYPASS
TS	TEMPERATURE SWITCH
TVSS	TRANSIENT VOLTAGE SURGE SUPPRESSOR
ZS	POSTION SENSOR (LIMIT SWITCH)

FUSE

XX

MOTOR

THERMAL OVERLOAD

UTILITY METER

TRANSFER SWITCH

ELECTRIC PANELBOARD

DISCONNECT OR SAFETY SWITCH

FIELD WIRING

FLOAT SWITCH. OPENS ON LOW LEVEL.

FLOAT SWITCH. CLOSES ON LOW LEVEL.

NORMALLY OPEN (N.O.) CONTACT

NORMALLY CLOSED (N.C.) CONTACT

FUSE

GROUND CONNECTION

R

INDICATING PILOT LIGHT LETTER INDICATES COLOR OF LENS

DISCONNECT OR TOGGLE SWITCH

NORMALLY OPEN MOMENTARY CIRCUIT CLOSING PUSH-BUTTON SWITCH SPRING OPEN. NUMBER OF ELECTRICAL CONTACTS ON SWITCH SHOWN ON CONTROL SCHEMATIC

NORMALLY CLOSED MOMENTARY CIRCUIT OPENING PUSH-BUTTON SWITCH SPRING CLOSE. NUMBER OF ELECTRICAL CONTACTS ON SWITCH SHOWN ON CONTROL SCHEMATIC

LIMIT SWITCH NORMALLY CLOSED CONTACT CONTACT OPENS WHEN ACTUATED

TORQUE SWITCH NORMALLY CLOSED CONTACT CONTACT OPENS WHEN ACTUATED

PUMP THERMAL SENSOR

FAN THERMOSTAT

ELECTRICAL LEGEND

SYMBOL	DESCRIPTION	MOUNTING/REMARKS
A	8' LED STRIP LIGHTING FIXTURE (1)	CEILING MOUNT
B	LED WALLPACK LIGHTING FIXTURE (1)	EXTERIOR WALL
EM	LED EMERGENCY AREA LIGHTING FIXTURE (1)	WALL MOUNTED
X	LED EXIT SIGN FIXTURE (1)	SURFACE UNIVERSAL MOUNT
$	SWITCH: SINGLE-POLE OR AS NOTED, 20A, 120/277VAC	TOP 48" AFF OR AS NOTED
$3	SWITCH: THREE-WAY, 20A, 120/277VAC	TOP 48" AFF OR AS NOTED
$4	SWITCH: 4-WAY, 20A, 120/277VAC	TOP 48" AFF OR AS NOTED
	DUPLEX RECEPTACLE: 20A, 125VAC	TOP 20" AFF OR AS NOTED
	COUNTER-TOP DUPLEX RECEPTACLE: 20A, 125VAC	TOP 44" AFF OR AS NOTED
	QUAD RECEPTACLE: 20A, 125VAC	TOP 20" AFF OR AS NOTED
	TELEPHONE/DATA OUTLET (2)	TOP 20" AFF OR AS NOTED
	ELECTRIC PANEL	REFER TO PANEL SCHEDULE
	FIRE ALARM PANEL	
	EQUIPMENT DISCONNECT SWITCH	
	OUTLET OR JUNCTION BOX	WIRES INDICATED AS FOLLOWS: TWO WIRES: THREE WIRES: FOUR WIRES, ETC. NEUTRAL WIRE ISOLATED GR. WIRE PROVIDE 2#12 THWN CU. IN 1/2" C. UNLESS OTHERWISE NOTED AND EQUIPMENT GROUND WIRE (NOT INDICATED) IN ALL POWER AND LIGHTING RACEWAYS.
CR	CARD READER	
DL	MAGNETIC DOOR LOCK	
S	SMOKE DETECTOR	
	JUNCTION BOX WITH FLEXIBLE CONNECTION	
	CONDUIT RUN CONCEALED IN CEILING SPACE OR WALL	
	CONDUIT RUN CONCEALED IN FLOOR OR UNDERGROUND	
	CONDUIT RUN EXPOSED	
	HOME RUN TO PANEL/CIRCUIT(S) INDICATED	

AIR TERMINAL AND ASSOCIATED BASE

HANDHOLE WITH GROUND ROD

HANDHOLE

EXAMPLE OF SECTION CUT AND DETAIL

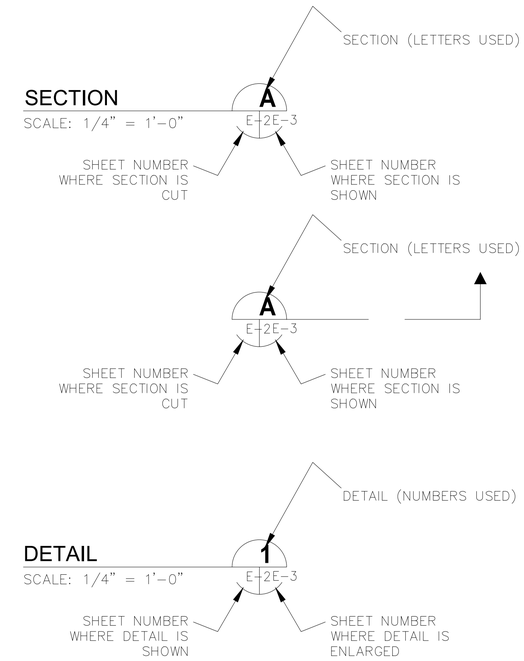

ABBREVIATIONS:

A	AMPS
AFF	ABOVE FINISHED FLOOR
AFG	ABOVE FINISHED GRADE
C	CONDUIT
DIA	DIAMETER
EX	EXISTING
ELEC	ELECTRICAL
GFI	GROUND FAULT INTERRUPTER
GND	GROUNDING CONDUCTOR
HP	HORSEPOWER
HZ	HERTZ
IG	ISOLATED GROUND
KVA	KILOVOLT AMPERES
KW	KILOWATTS
MAX	MAXIMUM
MIN	MINIMUM
N/A	NOT APPLICABLE
PH	PHASE
PLC	PROGRAMMABLE LOGIC CONTROLLER
RECP	RECEPTACLE
RPM	REVOLUTIONS PER MINUTE
RTU	REMOTE TERMINAL UNIT
SPD	SURGE PROTECTION DEVICE
SS	STAINLESS STEEL
TYP	TYPICAL
V	VOLTS
VFD	VARIABLE FREQUENCY DRIVE
WP	WEATHERPROOF
XFMR	TRANSFORMER

TRICON ENGINEERING
777 S. Harbour Island Blvd, STE 350, TAMPA, FL 33602
813.227.9190
Certificate of Authorization No. 00031028

No.	REVISIONS	DATE	BY

Kimley»Horn
© 2021 KIMLEY-HORN AND ASSOCIATES, INC.
100 2ND AVENUE SOUTH, SUITE 105-N, ST. PETERSBURG, FL 33701
PHONE: 727-547-3999
WWW.KIMLEY-HORN.COM CA 00000696

KHA PROJECT 148400067
DATE OCT 2021
SCALE AS SHOWN
DESIGNED BY TDT
DRAWN BY JLH
CHECKED BY GLW

BAYSHORE YACHT BASIN

LICENSED PROFESSIONAL
TIMOTHY THOMAS, P.E
FL LICENSE NUMBER 47079
DATE:

ELECTRICAL LEGEND AND ABBREVIATIONS

SHEET NUMBER
E-1

This document, together with the concepts and designs presented herein, as an instrument of service, is intended only for the specific purpose and client for which it was prepared. Reuse of and improper reliance on this document without written authorization and adaptation by Kimley-Horn and Associates, Inc. shall be without liability to Kimley-Horn and Associates, Inc.

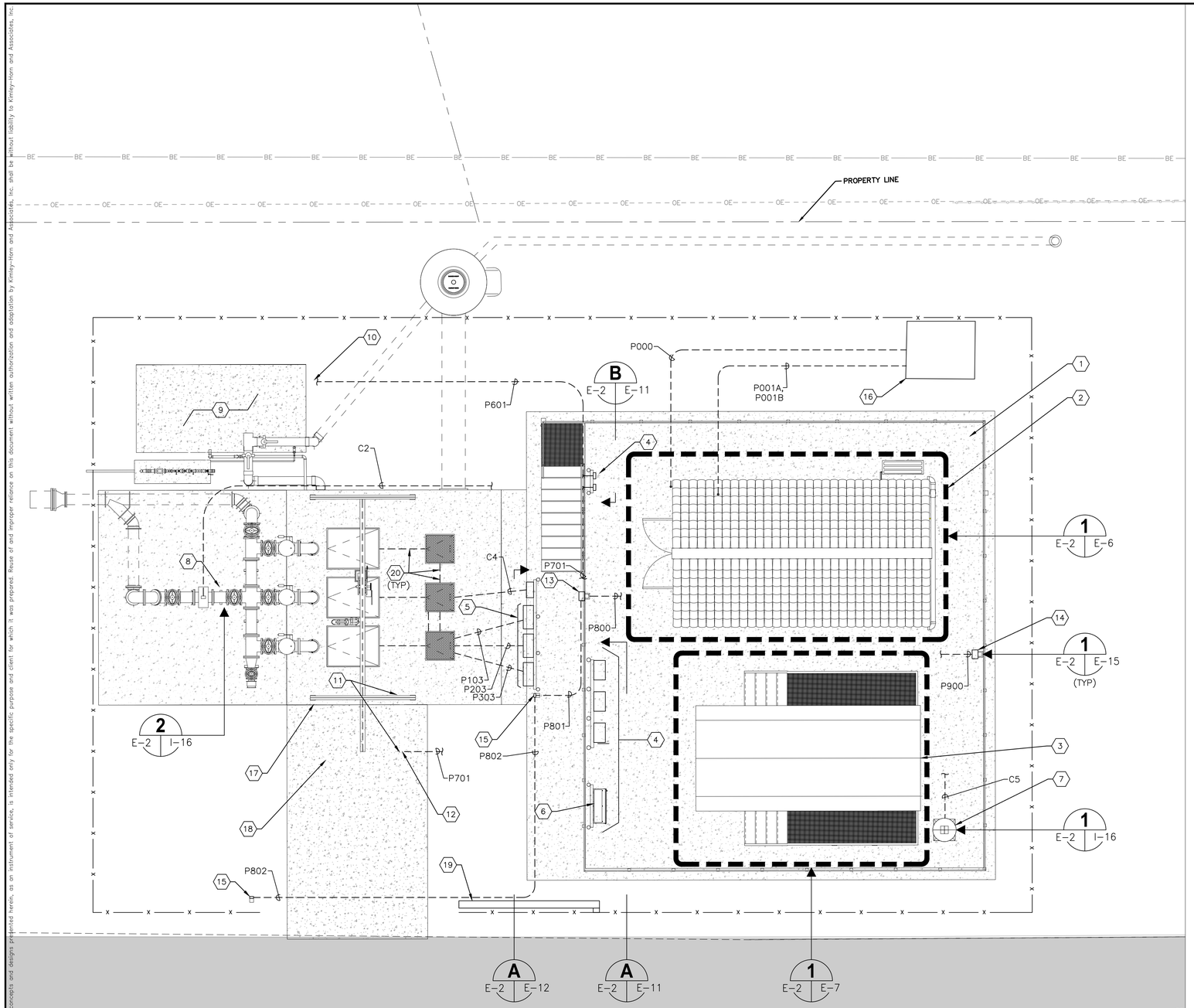

ELECTRICAL SITE PLAN

SCALE: AS NOTED

NORTH

GRAPHIC SCALE IN FEET
0 2.5 5 10

KEYED NOTES:

1. PROPOSED ELEVATED SLAB. REFER TO SHEET E-4 FOR LIGHTNING PROTECTION PLAN.
2. PROPOSED ELECTRICAL BUILDING. REFER TO SHEET E-6 FOR POWER AND LIGHTING PLANS.
3. PROPOSED 400KW GENERATOR IN WEATHERPROOF, SOUND ATTENUATED ENCLOSURE. PROVIDE 1,600 SUB-BASE TANK FOR 72 HOUR RUNTIME. REFER TO SHEET E-7 FOR DETAILS. (REFER ALSO TO SPECIFICATIONS).
4. PROPOSED ELECTRICAL EQUIPMENT RACK. REFER TO SHEET E-11 FOR ELEVATION AND DETAILS.
5. PROPOSED WET WELL JUNCTION BOX RACK. REFER TO SHEET E-12 FOR ELEVATION AND DETAILS.
6. PROPOSED DOCKING STATION. 277/480V, 3-PHASE, 4-WIRE, 600A WITH SOLID NEUTRAL IN NEMA 4X STAINLESS STEEL ENCLOSURE. TRYSTAR GDR-065W-LLM-I.
7. PROPOSED DATA FLOW SYSTEMS (DFS) ANTENNA AND TOWER. REFER TO DETAILS ON SHEET I-16. CONTRACTOR TO FIELD LOCATE DFS ANTENNA AND TOWER WITH COUNTY INSPECTOR.
8. PROPOSED FLOW METER ELEMENT. REFER TO MECHANICAL PLANS FOR EXACT LOCATION. PROVIDE AND INSTALL MANUFACTURER SUPPLIED CABLES IN 1" CONDUIT TO FLOW METER CONVERTER (LOCATED IN ELECTRICAL ROOM). REFER ALSO TO DETAIL ON SHEET I-16.
9. PROPOSED ODOR CONTROL EQUIPMENT SLAB.
10. APPROXIMATED LOCATION FOR PROPOSED ODOR CONTROL UNIT ELECTRICAL CONNECTION. COORDINATE ELECTRICAL CONNECTION DETAILS AND CONNECTION LOCATION WITH ODOR CONTROL UNIT SUPPLIER. PROVIDE WATERPROOF, NON-METALLIC, FLEXIBLE CONNECTION TO ODOR CONTROL UNIT.
11. PROPOSED OVERHEAD BRIDGE CRANE.
12. APPROXIMATED LOCATION FOR PROPOSED CRANE ELECTRICAL CONNECTION. COORDINATE ELECTRICAL CONNECTION DETAILS AND CONNECTION LOCATION WITH CRANE SUPPLIER. PROVIDE WATERPROOF, NON-METALLIC, FLEXIBLE CONNECTION TO CRANE.
13. PROPOSED AREA LIGHT C1. REFER TO SHEET E-6 FOR LIGHTING FIXTURE SCHEDULE. REFER TO E-15 FOR DETAILS.
14. PROPOSED AREA LIGHT C2. REFER TO SHEET E-6 FOR LIGHTING FIXTURE SCHEDULE. REFER TO E-15 FOR DETAILS.
15. PROVIDE AND INSTALL 120V, 20A, 3-WAY SWITCH IN WEATHERPROOF, SINGLE GANG DIE CAST ALUMINUM FS BOX, BELL 5331-0, OR EQUAL. PROVIDE AND INSTALL SINGLE-GANG WEATHERPROOF 3-WAY SWITCH COVER. BELL #5141-0. INSTALL SWITCH ON 4" SQUARE CONCRETE POST EMBEDDED A MINIMUM OF 3 FEET. HEIGHT OF 3-WAY SWITCH SHALL BE 56 INCHES TO BOTTOM OF FS BOX. 3-WAY SWITCHES TO BE USED FOR AREA LIGHT C1 CONTROL. REFER TO SHEET E-15 FOR WIRING SCHEMATIC.
16. EXISTING UTILITY TRANSFORMER TO BE USED FOR NEW LIFT STATION POWER. COORDINATE ALL CONNECTION AND METERING REQUIREMENTS WITH UTILITY.
17. PROPOSED 16' x 16' CIP WETWELL.
18. PROPOSED CONCRETE ACCESS DRIVE.
19. PROPOSED 12' CANTILEVER SLIDE GATE.
20. PROVIDE AND INSTALL STAINLESS STEEL HANGERS (SIZED AS REQUIRED) TO ALLOW PUMP CABLES TO BE INSTALLED AND ACCESSED UNDER SLAB.

GENERAL NOTES:

1. NOT ALL CONDUIT AND CONDUCTORS SHOWN FOR CLARITY. REFER TO OTHER SHEETS FOR ADDITIONAL REQUIREMENTS.
2. CONDUIT ROUTING SHOWN IS DIAGRAMMATICAL. CONTRACTOR MAY FIELD ROUTE CONDUCTORS BASED ON FIELD CONDITIONS WHILE COMPLYING WITH THE NATIONAL ELECTRICAL CODE FOR MAXIMUM NUMBER OF BENDS.

TRICON ENGINEERING
777 S. Harbour Island Blvd, STE 350, TAMPA, FL 33602
813.227.9190
Certificate of Authorization No. 00031028

No.	REVISIONS	DATE	BY

Kimley»Horn
© 2021 KIMLEY-HORN AND ASSOCIATES, INC.
100 2ND AVENUE SOUTH, SUITE 105-N, ST. PETERSBURG, FL 33701
PHONE: 727-547-3999
WWW.KIMLEY-HORN.COM REGISTRY NO. 696

KHA PROJECT 148400067
DATE OCT 2021
SCALE AS SHOWN
DESIGNED BY TDT
DRAWN BY JLT
CHECKED BY GLW

Manatee County FLORIDA

BAYSHORE YACHT BASIN FORCE MAIN AND LIFT STATION REPLACEMENT

MANATEE COUNTY FL

LICENSED PROFESSIONAL
TIMOTHY THOMAS, P.E.
FL LICENSE NUMBER 47079
DATE:

ELECTRICAL SITE PLAN

SHEET NUMBER
E-2

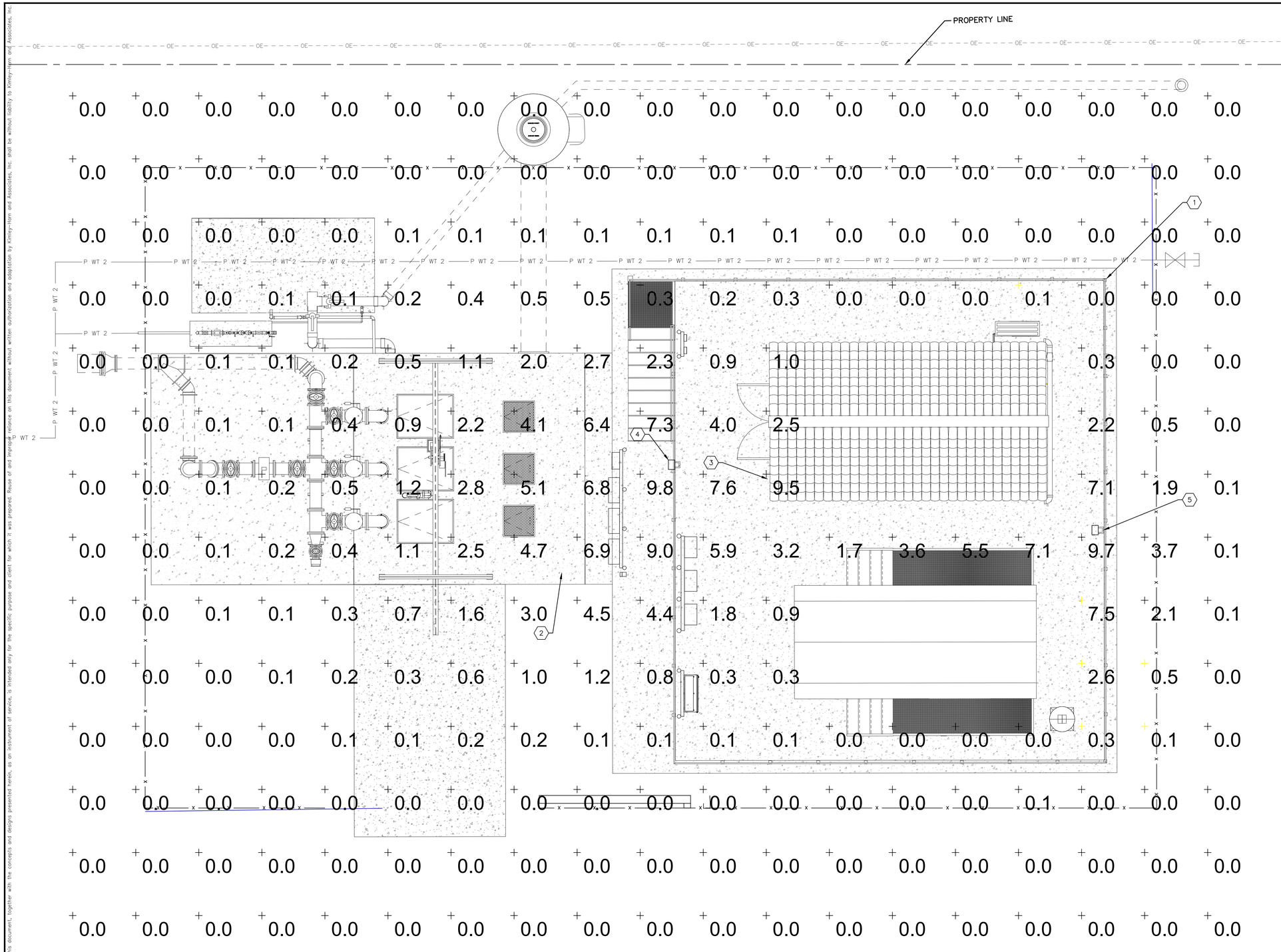

KEYED NOTES:

1. PROPOSED ELEVATED SLAB.
2. WET WELL SLAB AT GRADE.
3. PROPOSED FIXTURE 'B'. REFER ALSO TO FIXTURE LIGHTING SCHEDULE ON SHEET E-6. FIXTURE TO BE CONTROLLED BY PHOTOCELL.
4. PROPOSED FIXTURE 'C1'. REFER ALSO TO FIXTURE LIGHTING SCHEDULE ON SHEET E-6. FIXTURE TO BE CONTROLLED BY 3-WAY SWITCHES AT GATE AND WET WELL JUNCTION BOX RACK.
5. PROPOSED FIXTURE 'C2'. REFER ALSO TO FIXTURE LIGHTING SCHEDULE ON SHEET E-6. FIXTURE TO BE CONTROLLED BY SWITCH WITHIN ELECTRICAL ROOM.

PHOTOMETRIC STATISTICS

AVERAGE FOOTCANDLES	0.8fc
MAXIMUM FOOTCANDLES	9.81fc
MINIMUM FOOTCANDLES	0.0fc

TRICON ENGINEERING
777 S. Harbour Island Blvd, STE 350, TAMPA, FL 33602
813.227.9190
Certificate of Authorization No. 00031028

This document, together with the concepts and designs presented herein, as an instrument of service, is intended only for the specific purpose and client for which it was prepared. Reuse of and improper reliance on this document without written authorization and adaptation by Kimley-Horn and Associates, Inc. shall be without liability to Kimley-Horn and Associates, Inc.

No.	REVISIONS	DATE	BY

Kimley»Horn

© 2022 KIMLEY-HORN AND ASSOCIATES, INC.
100 2ND AVENUE SOUTH, SUITE 105-N, ST. PETERSBURG, FL 33701
PHONE: 727-547-3999
WWW.KIMLEY-HORN.COM REGISTRY NO. 35106

KHA PROJECT 148400067
DATE OCT 2021
SCALE AS SHOWN
DESIGNED BY TDT
DRAWN BY JLT
CHECKED BY GLW

Manatee County FLORIDA

BAYSHORE YACHT BASIN FORCE MAIN AND LIFT STATION REPLACEMENT

MANATEE COUNTY FL

LICENSED PROFESSIONAL
TIMOTHY THOMAS, P.E.
FL LICENSE NUMBER 47079
DATE:

SITE LIGHTING PLAN

SHEET NUMBER
E-3

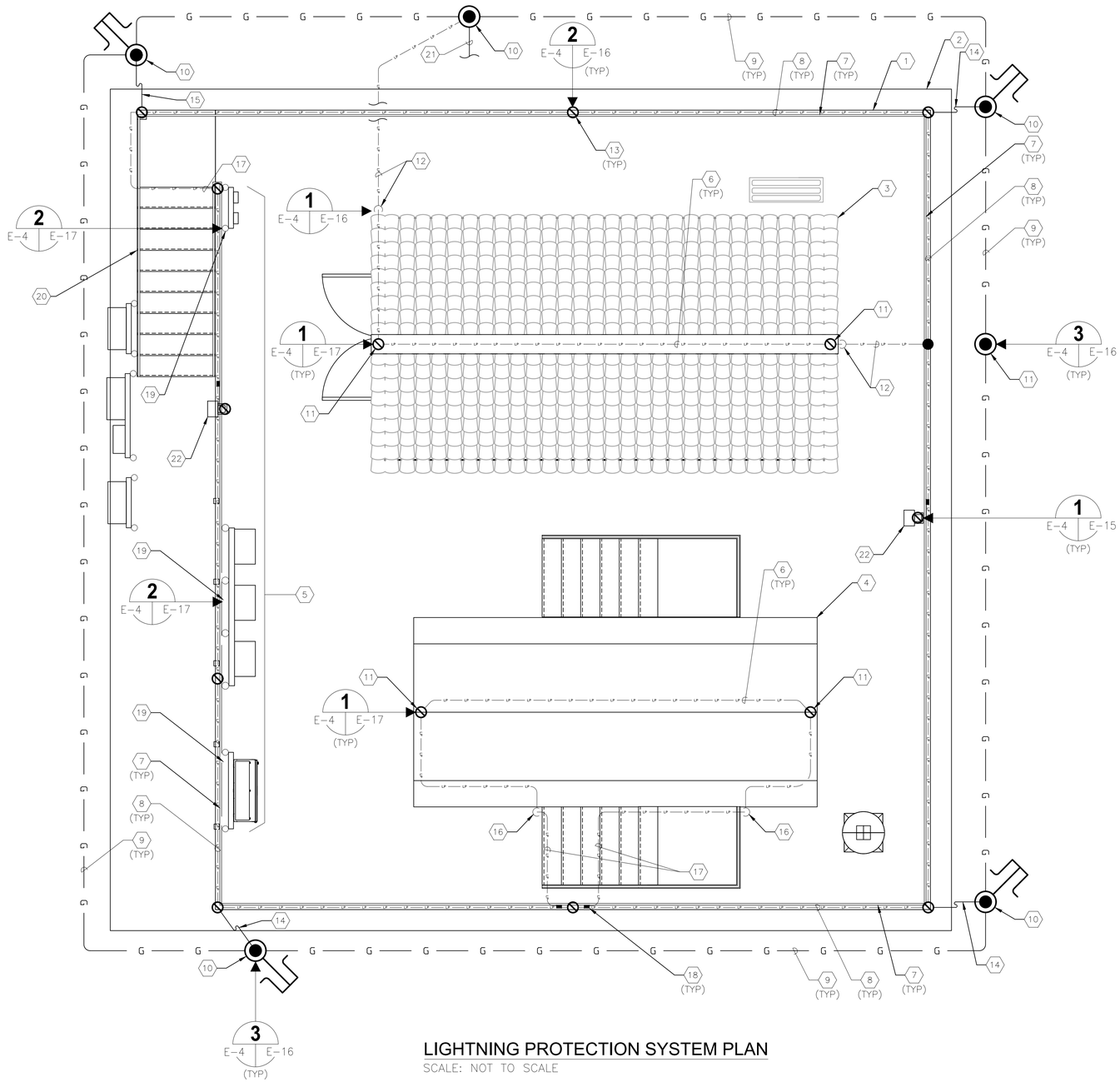

LIGHTNING PROTECTION SYSTEM PLAN

SCALE: NOT TO SCALE

KEYED NOTES:

1. EDGE OF PROPOSED ELEVATED SLAB (TYPICAL 4 SIDES).
2. EDGE OF PROPOSED FOUNDATION SLAB (TYPICAL 4 SIDES).
3. PROPOSED ELECTRICAL BUILDING.
4. PROPOSED STANDBY GENERATOR IN WEATHERPROOF ENCLOSURE.
5. ELECTRICAL EQUIPMENT RACK(S). REFER TO SHEET E-11 FOR ELEVATION AND DETAILS.
6. CLASS I ALUMINUM LIGHTNING CONDUCTOR RUN EXPOSED ON ROOF. FASTEN EVERY 3 FEET MAX.
7. PROPOSED HANDRAIL.
8. CONTRACTOR TO PROVIDE AND INSTALL MAIN LIGHTNING PROTECTION CONDUCTOR. INSTALL ON PROPOSED ELEVATED SLAB BEHIND PROPOSED HANDRAIL.
9. CONTRACTOR TO PROVIDE AND INSTALL 2/O AWG BARE COPPER GROUNDING GRID CONDUCTOR (MINIMUM BURIAL DEPTH 24") BETWEEN ASSOCIATED GROUND RODS.
10. CONTRACTOR TO PROVIDE AND INSTALL LIGHTING PROTECTION GROUND ROD IN GROUND ROD HANDHOLE. FOR TYPICAL INSTALLATION DETAIL REFER TO SHEET E-16.
11. CONTRACTOR TO PROVIDE AND INSTALL AIR TERMINAL. FOR TYPICAL AIR TERMINAL INSTALLATION DETAIL REFER TO SHEET E-17.
12. FOR TYPICAL DOWN CONDUCTOR INSTALLATION FROM ROOF, REFER TO DETAIL REFER TO SHEET E-16.
13. CONTRACTOR TO PROVIDE AND INSTALL HANDRAIL AIR TERMINAL. FOR TYPICAL AIR TERMINAL INSTALLATION DETAIL REFER TO SHEET E-13.
14. LIGHTNING PROTECTION CONDUCTOR FROM HANDRAIL CONDUCTOR SHALL BE INSTALLED DOWN PROPOSED COLUMN. INSTALLATION SHALL BE SIMILAR TO DOWN CONDUCTOR FROM ROOF.
15. MAIN LIGHTNING PROTECTION CONDUCTOR SHALL BE INSTALLED BELOW STAIRS IN THIS AREA.
16. LIGHTNING PROTECTION DOWN CONDUCTOR SHALL BE INSTALLED IN 1" PVC CONDUIT ON SIDE OF GENERATOR ENCLOSURE (LOCATION SHALL BE COORDINATED WITH DOORS OR OTHER OPENING.
17. LIGHTNING PROTECTION CONDUCTOR SHALL BE INSTALLED BELOW STAIRS IN THIS AREA.
18. CONTRACTOR TO PROVIDE AND INSTALL ALUMINUM CABLE SPLICER. THOMPSON LIGHTNING PROTECTION (TLP) A423 OR APPROVED EQUAL.
19. CONTRACTOR TO BOND EQUIPMENT RACK TO LIGHTNING PROTECTION SYSTEM. REFER TO DETAIL 2 ON SHEET E-17.
20. CONTRACTOR TO BOND STAIRS AND STAIR HANDRAIL TO LIGHTNING PROTECTION SYSTEM.
21. CONTRACTOR TO BOND LIGHTNING PROTECTION SYSTEM TO ELECTRICAL GROUND GRID WITH 2/O AWG BARE COPPER CONDUCTOR. FOR CONTINUATION REFER TO SHEET E-5.
22. REFER TO SHEET E-15 FOR AREA LIGHT LIGHTNING PROTECTION DETAILS.

GENERAL NOTES:

1. COORDINATE ANY LIGHTNING PROTECTION REQUIREMENTS FOR DATA FLOW SYSTEMS (DFS) ANTENNA TOWER WITH DFS.

This document, together with the concepts and designs presented herein, as an instrument of service, is intended only for the specific purpose and client for which it was prepared. Reuse of and improper reliance on this document without written authorization and adaptation by Kimley-Horn and Associates, Inc. shall be without liability to Kimley-Horn and Associates, Inc.

TRICON ENGINEERING
777 S. Harbour Island Blvd, STE 350, TAMPA, FL 33602
813.227.9190
Certificate of Authorization No. 00031028

No.	REVISIONS	DATE	BY

Kimley»Horn

© 2021 KIMLEY-HORN AND ASSOCIATES, INC.
100 2ND AVENUE SOUTH, SUITE 105-N, ST. PETERSBURG, FL 33701
PHONE: 727-547-3999
WWW.KIMLEY-HORN.COM CA 00000696

KHA PROJECT	148400067
DATE	OCT 2021
SCALE	AS SHOWN
DESIGNED BY	TDT
DRAWN BY	JLH
CHECKED BY	GLW

BAYSHORE YACHT BASIN

LICENSED PROFESSIONAL
TIMOTHY THOMAS, P.E
FL LICENSE NUMBER
47079
DATE:

LIGHTNING PROTECTION SYSTEM PLAN

SHEET NUMBER
E-4

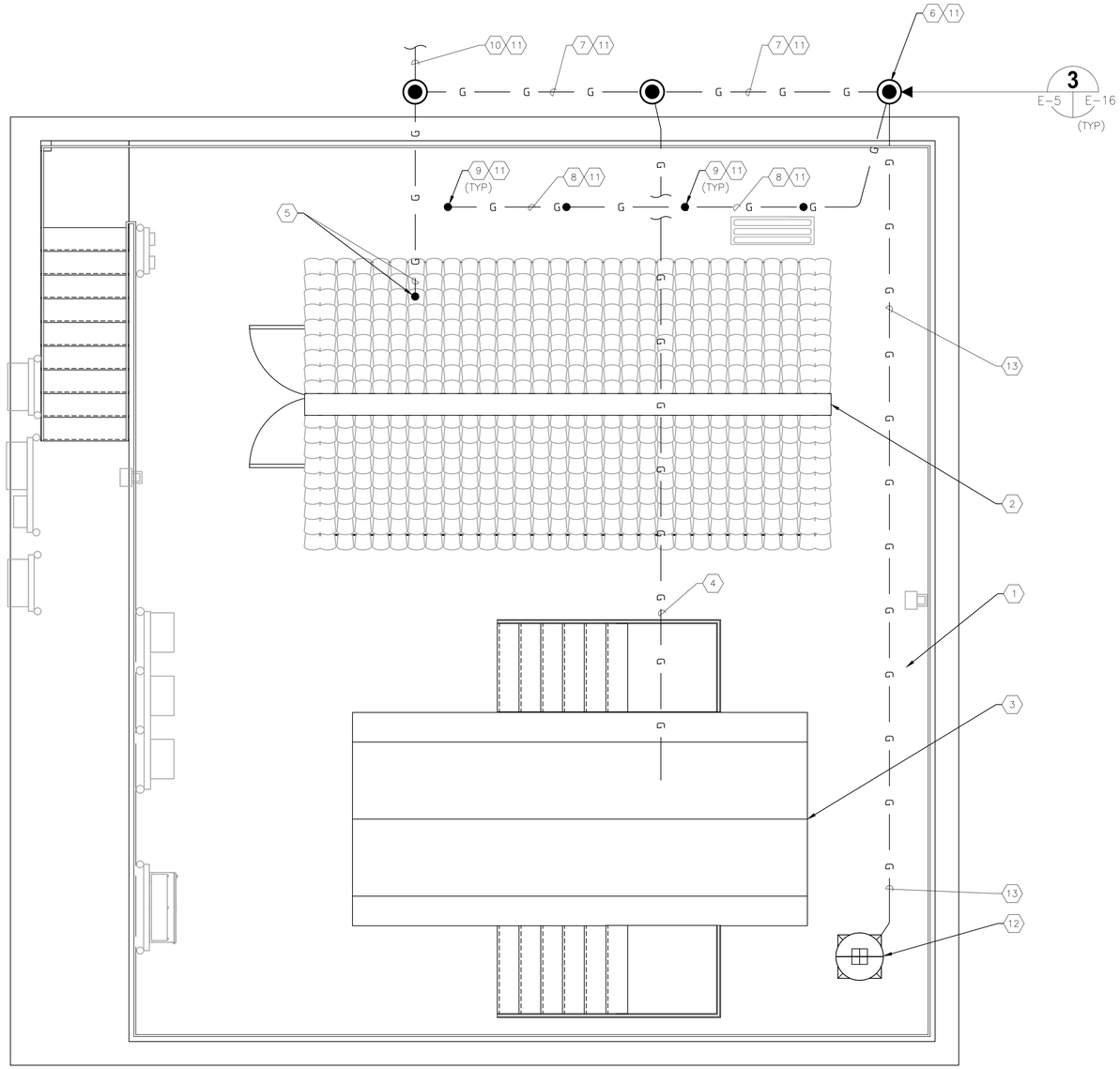

ELECTRICAL GROUNDING PLAN

SCALE: NOT TO SCALE

KEYED NOTES:

1. PROPOSED ELEVATED SLAB. REFER TO SHEET E-4 FOR LIGHTNING PROTECTION PLAN.
2. PROPOSED ELECTRICAL BUILDING.
3. PROPOSED 400KW GENERATOR IN WEATHERPROOF, SOUND ATTENUATED ENCLOSURE.
4. CONTRACTOR TO PROVIDE AND INSTALL BARE 2/0 AWG COPPER GROUNDING ELECTRODE CONDUCTOR IN 1" CONDUIT FROM GENERATOR FRAME DOWN TO GRADE LEVEL AND CONNECT TO GROUNDING GRID.
5. REFER TO ONE LINE DIAGRAM ON SHEET E-9 FOR ELECTRICAL SERVICE GROUNDING ELECTRODE CONDUCTOR WITHIN MOTOR CONTROL CENTER. PROVIDE AND INSTALL BARE 2/0 AWG COPPER GROUNDING ELECTRODE CONDUCTOR IN 1" CONDUIT DOWN TO GRADE LEVEL AND CONNECT TO GROUNDING GRID.
6. CONTRACTOR TO PROVIDE AND INSTALL NEW 3/4" X 20'-0" COPPER-CLAD GROUND ROD AND GROUND ROD TEST WELL. REFER ALSO TO GROUND ROD HANDHOLE DETAIL ON SHEET E-16. TYPICAL OF THREE (3).
7. CONTRACTOR TO PROVIDE AND INSTALL GROUND RING CONSISTING OF #2/0 BARE STRANDED COPPER DIRECT BURIED IN SOIL A MINIMUM OF 24" BELOW GRAVEL BASE.
8. CONTRACTOR TO PROVIDE AND INSTALL A #2/0 AWG BARE COPPER CONDUCTOR BETWEEN THE GROUND ROD AND THE REINFORCING STEEL EMBEDDED IN THE CONCRETE FOUNDATION (AT GRADE LEVEL). PROVIDE A MINIMUM OF 30 FEET OF CONDUCTOR LENGTH.
9. EMBEDDED GROUNDING ELECTRODE CONDUCTOR SHALL BE ATTACHED TO REINFORCING STEEL VIA MECHANICAL REBAR BONDING CLAMP. CONNECTIONS TO REBAR SHALL BE MADE AT 5 FOOT INTERVALS.
10. CONTRACTOR TO BOND ELECTRICAL GROUND GRID TO LIGHTNING PROTECTION SYSTEM WITH 2/0 AWG BARE COPPER CONDUCTOR. FOR CONTINUATION REFER TO LIGHTNING PROTECTION DRAWING ON SHEET E-4.
11. INDICATES ITEM TO BE INSTALLED AT GROUND LEVEL.
12. PROPOSED DFS TOWER. REFER TO SHEET I-16 FOR DETAILS.
13. CONTRACTOR TO PROVIDE AND INSTALL BARE 1/0 AWG COPPER GROUNDING ELECTRODE CONDUCTOR IN 1" CONDUIT FROM DFS TOWER DOWN TO GRADE LEVEL AND CONNECT TO GROUNDING GRID.

This document, together with the concepts and designs presented herein, as an instrument of service, is intended only for the specific purpose and client for which it was prepared. Reuse of and improper reliance on this document without written authorization and adaptation by Kimley-Horn and Associates, Inc. shall be without liability to Kimley-Horn and Associates, Inc.

TRICON ENGINEERING
777 S. Harbour Island Blvd, STE 350, TAMPA, FL 33602
813.227.9190
Certificate of Authorization No. 00031028

No.	REVISIONS	DATE	BY

Kimley»Horn

© 2021 KIMLEY-HORN AND ASSOCIATES, INC.
100 2ND AVENUE SOUTH, SUITE 105-N, ST. PETERSBURG, FL 33701
PHONE: 727-547-3999
WWW.KIMLEY-HORN.COM CA 00000696

KHA PROJECT 148400067
DATE OCT 2021
SCALE AS SHOWN
DESIGNED BY TDT
DRAWN BY JLH
CHECKED BY GLW

BAYSHORE YACHT BASIN

LICENSED PROFESSIONAL
TIMOTHY THOMAS, P.E
FL LICENSE NUMBER 47079
DATE:

ELECTRICAL GROUNDING PLAN

SHEET NUMBER
E-5

This document, together with the concepts and designs presented herein, as an instrument of service, is intended only for the specific purpose and client for which it was prepared. Reuse of and improper reliance on this document without written authorization and adaptation by Kimley-Horn and Associates, Inc. shall be without liability to Kimley-Horn and Associates, Inc.

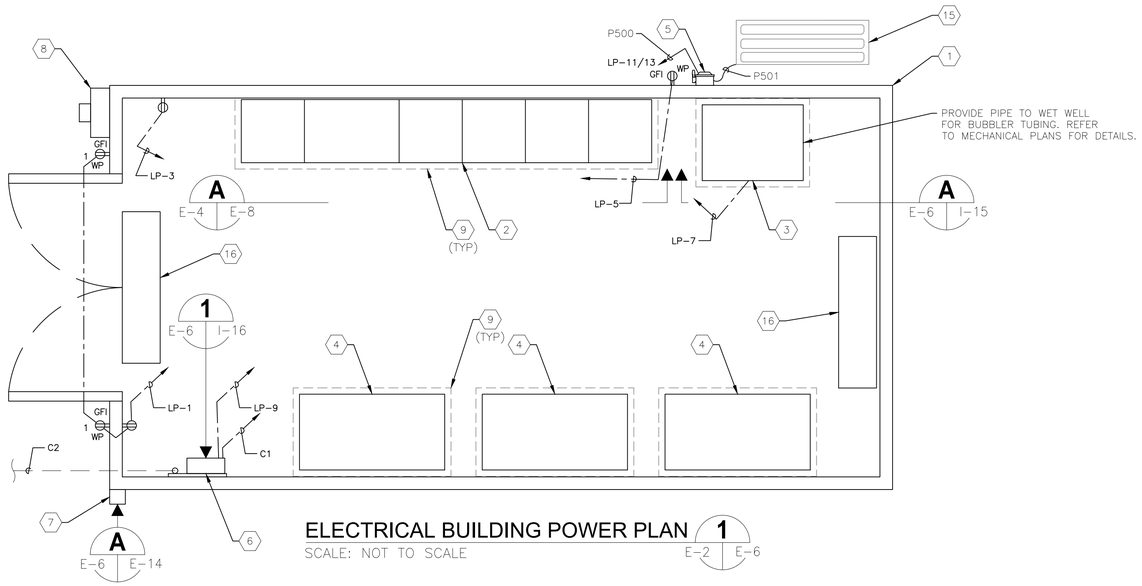

ELECTRICAL BUILDING POWER PLAN 1

SCALE: NOT TO SCALE

E-2 E-6

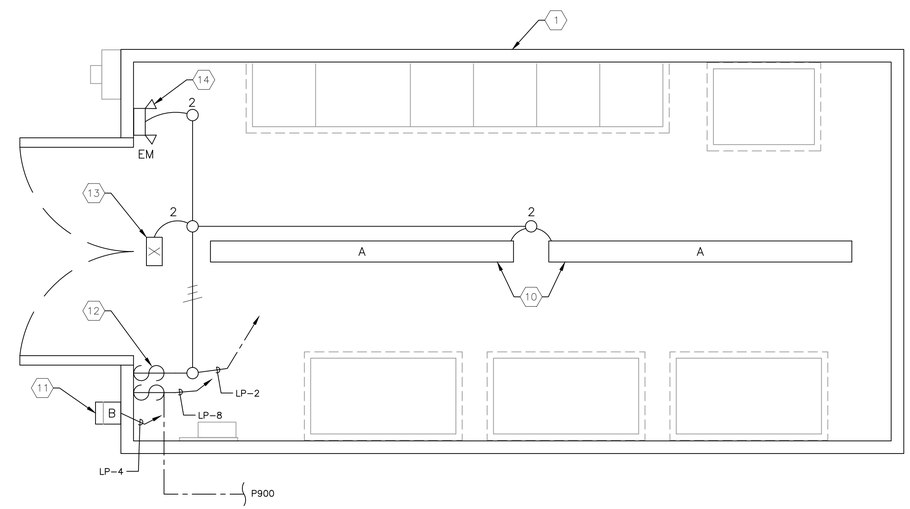

ELECTRICAL BUILDING LIGHTING PLAN 1

SCALE: NOT TO SCALE

E-2 E-6

KEYED NOTES:

1. PROPOSED ELECTRICAL BUILDING.
2. PROPOSED 277/480V, 600A, MOTOR CONTROL CENTER WITH INTEGRAL 600A AUTOMATIC TRANSFER SWITCH (ATS). REFER TO SHEET E-8.
3. PROPOSED DATA FLOW SYSTEMS (DFS) TCU/VFD PANEL TO BE PROVIDED. REFER ALSO TO INSTRUMENTATION DRAWING SHEET I-15.
4. PROPOSED 100HP VARIABLE FREQUENCY DRIVE (VFD). FUGI MEGA DRIVE TO BE PROVIDED.
5. PROPOSED 60A, 600V, 3-POLE NON-FUSED DISCONNECT IN NEMA 4X STAINLESS STEEL ENCLOSURE FOR HVAC UNIT DISCONNECTING MEANS.
6. PROPOSED FLOW METER TRANSMITTER. REFER TO DETAIL ON SHEET I-16.
7. PROPOSED EMERGENCY GENERATOR SHUTDOWN PUSHBUTTON STATION. REFER TO DETAIL ON SHEET E-14.
8. PROPOSED CT METER LOCATION. COORDINATE CT METER REQUIREMENTS WITH DUKE ENERGY. COORDINATE LOCATION WITH FPL.
9. PROVIDE 2" HIGH CONCRETE HOUSEKEEPING PAD FOR ALL FLOOR MOUNTED EQUIPMENT. HOUSEKEEPING PADS SHALL EXTEND AROUND EQUIPMENT 2".
10. PROVIDE AND INSTALL NEW 8' LED LIGHT FIXTURE. REFER TO FIXTURE SCHEDULE ON THIS SHEET.
11. PROVIDE AND INSTALL NEW WALLPACK LIGHT FIXTURE. REFER TO FIXTURE SCHEDULE ON THIS SHEET. CIRCUIT LP-4.
12. PROVIDE AND INSTALL TWO (2) SINGLE-POLE, 120/277V, 20A SWITCHES IN A TWO-GANG, ALUMINUM FS JUNCTION BOX. PROVIDE BRUSHED ALUMINUM DEVICE PLATE.
13. PROVIDE AND INSTALL NEW LED EXIT SIGN ABOVE DOOR. COORDINATE ELEVATION WITH HVAC EQUIPMENT. REFER TO FIXTURE SCHEDULE ON THIS SHEET.
14. PROVIDE AND INSTALL NEW LED EMERGENCY LIGHTING FIXTURE. REFER TO FIXTURE SCHEDULE ON THIS SHEET.
15. HVAC UNIT (MINI SPLIT SYSTEM CONDENSING UNIT).
16. HVAC AIR HANDLER. POWER DERIVED FORM CONDENSING UNIT. COORDINATE POWER WIRING WITH MINI SPLIT SYSTEM SUPPLIER.

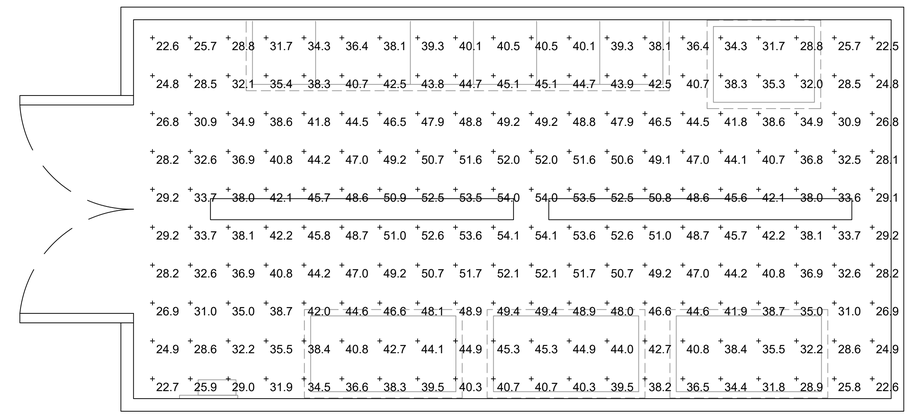

ELECTRICAL BUILDING INTERIOR PHOTOMETRICS

SCALE: NOT TO SCALE

GENERAL NOTES:

1. NOT ALL CONDUIT AND CONDUCTORS SHOWN FOR CLARITY. REFER TO OTHER SHEETS FOR ADDITIONAL REQUIREMENTS.
2. CONDUIT ROUTING SHOWN IS DIAGRAMMATICAL. CONTRACTOR MAY FIELD ROUTE CONDUCTORS BASED ON FIELD CONDITIONS WHILE COMPLYING WITH THE NATIONAL ELECTRICAL CODE FOR MAXIMUM NUMBER OF BENDS.

LIGHTING FIXTURE SCHEDULE

TYPE	MANUFACTURER	CATALOG NUMBER	LAMP(S)	VOLTS	MOUNTING	REMARKS
A	COLUMBIA	LXEM8-50MLRA-EU	(1) 84W DRIVER	120	CEILING	LED STRIP FIXTURE.
B	LITHONIA	TWS LED P1 50K MVOLT PE DDB	(1) 36W DRIVER	120	WALL	MOUNT AT 7'-0" TO BOTTOM OF FIXTURE.
C1	LITHONIA	DSXF1 LED P1 40K FL MVOLT IS DDBXD	(1) 21W LED	120	POLE	MOUNT ON ELEVATED SLAB AT 12'-0" ABOVE SLAB. AIM WITH 20° TILT. PROVIDE ADJUSTABLE SLIPFITTER FOR 2-3/8" O.D. TENNON.
C1P	LITHONIA	SSA 12 4C T20 UL NEC DDBXD				12'-0" SQUARE ALUMINUM POLE FOR C1. PROVIDE 2-3/8" TENON MOUNT, HANDHOLE COVER AND FULL BASE COVER.
C2	LITHONIA	DSXF1 LED P1 40K FL MVOLT IS DDBXD	(1) 21W LED	120	POLE	MOUNT ON ELEVATED SLAB AT 12'-0" ABOVE SLAB. AIM WITH 20° TILT. PROVIDE ADJUSTABLE SLIPFITTER FOR 2-3/8" O.D. TENNON.
C2P	LITHONIA	SSA 16 4C T20 UL NEC DDBXD				16'-0" SQUARE ALUMINUM POLE FOR C2. PROVIDE 2-3/8" TENON MOUNT, HANDHOLE COVER AND FULL BASE COVER.
EM	LITHONIA	ELM2 LED	(2) 1.6 W LED	120/277	WALL	LED EMERGENCY LIGHT
X	LITHONIA	LQMP3R120/277ELN	(1) 1W DRIVER	120/277	UNIVERSAL	LED EXIT SIGN WITH NICKEL CADMIUM BATTERY BACKUP

PHOTOMETRIC STATISTICS

AVERAGE FOOTCANDLES	40.1fc	MAX/MIN RATIO:	2.4/1
MAXIMUM FOOTCANDLES	54.1fc	AVE/MIN RATIO:	1.8/1
MINIMUM FOOTCANDLES	22.5fc		

TRICON ENGINEERING
777 S. Harbour Island Blvd, STE 350, TAMPA, FL 33602
813.227.9190
Certificate of Authorization No. 00031028

No.	REVISIONS	DATE	BY

Kimley»Horn
© 2021 KIMLEY-HORN AND ASSOCIATES, INC.
100 2ND AVENUE SOUTH, SUITE 105-N, ST. PETERSBURG, FL 33701
PHONE: 727-547-3999
WWW.KIMLEY-HORN.COM CA 00000696

KHA PROJECT 148400067
DATE OCT 2021
SCALE AS SHOWN
DESIGNED BY TDT
DRAWN BY JLH
CHECKED BY GLW

BAYSHORE YACHT BASIN

LICENSED PROFESSIONAL
TIMOTHY THOMAS, P.E
FL LICENSE NUMBER 47079
DATE:

ELECTRICAL BUILDING POWER AND LIGHTING PLANS

SHEET NUMBER
E-6

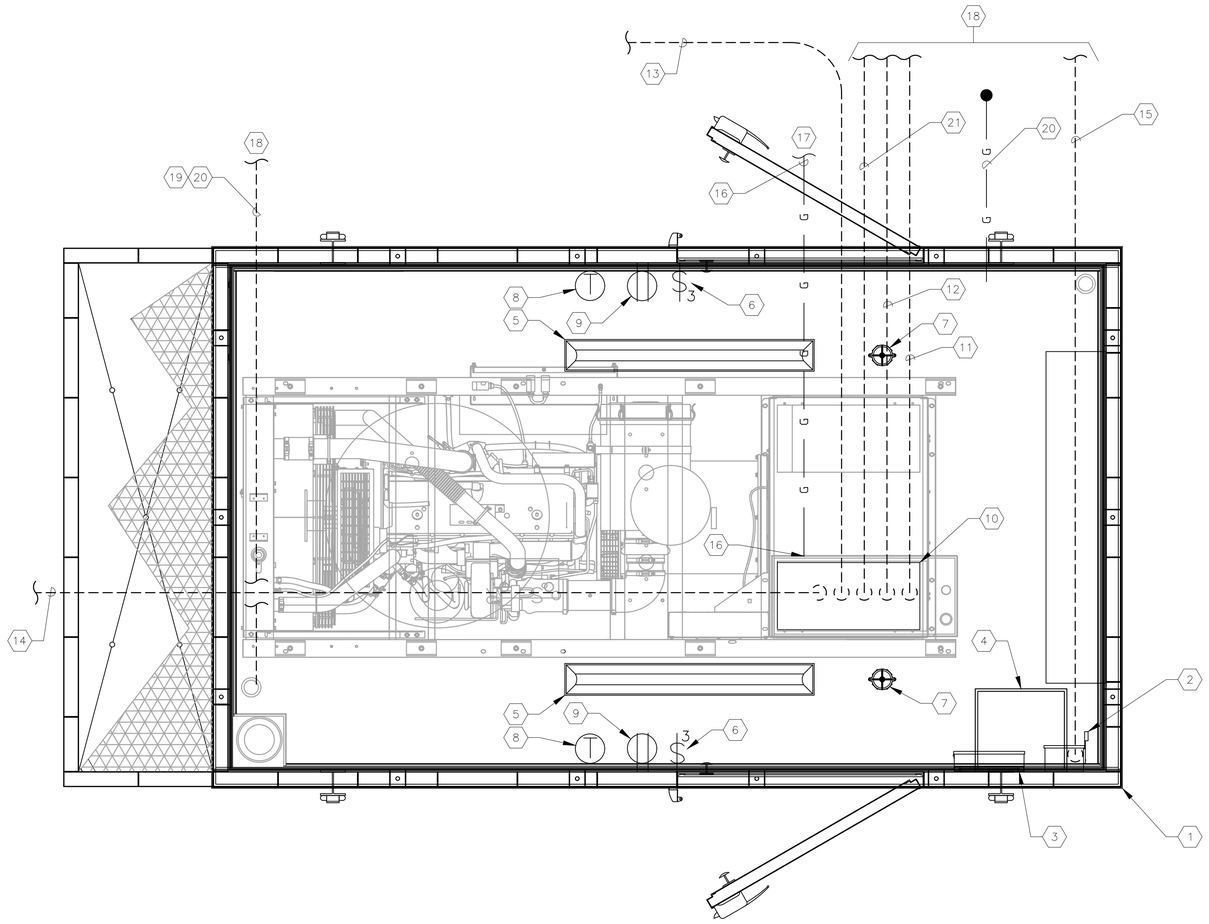

GENERATOR DETAILS 1
SCALE: NO TO SCALE E-2 E-7

KEYED NOTES:

1. NEW 480V, 400 KW GENERATOR IN WEATHER-PROOF, SOUND ATTENUATED ENCLOSURE. REFER ALSO TO SPECIFICATIONS.
2. 60 AMPERE FUSED DISCONNECT SWITCH PROVIDED AND INSTALLED AS PART OF THE ENCLOSURE PACKAGE.
3. 100 AMPERE, 120/208V, 3ø, MCB LOADCENTER PROVIDED AND INSTALLED AS PART OF THE ENCLOSURE PACKAGE.
4. 25 KVA, 480V-120/208V, 3ø, TRANSFORMER PROVIDED, INSTALLED AND GROUNDED PER NEC AS PART OF THE ENCLOSURE PACKAGE. TRANSFORMER LOCATED ABOVE DISCONNECT AND LOADCENTER.
5. DUAL LED LIGHT FIXTURE PROVIDED AND INSTALLED AS PART OF THE ENCLOSURE PACKAGE.
6. 3-WAY SWITCHES PROVIDED AND INSTALLED AS PART OF THE ENCLOSURE PACKAGE.
7. DC LIGHT FIXTURES PROVIDED AND INSTALLED AS PART OF THE ENCLOSURE PACKAGE.
8. 60 MINUTE TIMER SWITCHES FOR DC LIGHT FIXTURES PROVIDED AND INSTALLED AS PART OF THE ENCLOSURE PACKAGE.
9. 20A, 125V DUPLEX GFCI RECEPTACLE PROVIDED AND INSTALLED AS PART OF THE ENCLOSURE PACKAGE.
10. STUBUP LOCATION FOR 480V FEEDER CIRCUIT, GENERATOR STARTER CIRCUIT, GENERATOR SHUT DOWN AND SCADA I/O. COORDINATE/VERIFY EXACT LOCATION WITH ENCLOSURE MANUFACTURER.
11. PROVIDE AND INSTALL 12-#12 THWN CU + 1-#12 THWN CU GND IN 1" CONDUIT TO DFS TCU/VFD CABINET FOR SCADA MONITORING OF GENERATOR. 2-#12 FOR GENERATOR RUNNING INDICATION, 2-#12 FOR GENERATOR FAIL, 2-#12 FOR GENRATOR IN AUTO, 2-#12 FOR GENERATOR IN HAND INDICATION AND 4-#12 SPARE (C400).
12. PROVIDE AND INSTALL 4-#12 THWN CU + 1-#12 THWN CU GND IN 1" CONDUIT TO AUTOMATIC TRANSFER SWITCH FOR GENERATOR START SIGNAL. CONTRACTOR TO COORDINATE/VERIFY GENERATOR STARTER CONTROL REQUIREMENTS WITH GENERATOR AND TRANSFER SWITCH MANUFACTURERS (C401).
13. PROVIDE AND INSTALL 2-#12 THWN CU + 1-#12 THWN CU GND IN 1" CONDUIT TO NEW EMERGENCY SHUT DOWN PUSH BUTTON STATION FOR SHUT DOWN SIGNAL (C404).
14. PROVIDE AND INSTALL TWO (2) PARALLEL RUNS CONSISTING OF 3-350 kcmil THWN CU + 1-#1 THWN CU GND IN 3" CONDUIT (P003A, P003B).
15. PROVIDE AND INSTALL 3-#8 THWN CU + 1-#10 THWN CU GND IN 1-1/4" CONDUIT TO NEW MCC FEEDER CIRCUIT BREAKER FOR 480V ANCILLARY EQUIPMENT FEEDER CIRCUIT (P400).
16. CONTRACTOR TO PROVIDE AND INSTALL #2/0 BARE STRANDED COPPER. BOND TO GENERATOR FRAME. INSTALL BONDING CONDUCTOR IN 1" CONDUIT AND CONTINUE TO ELECTRIC GROUND GRID. REFER ALSO TO SHEET E-5.
17. REFER TO SHEET E-5 FOR CONTINUATION.
18. FOR CONTINUATION REFER ONE LINE DIAGRAM OR REFER TO CONDUIT AND CABLE SCHEDULE.
19. PROVIDE AND INSTALL 10-#12 THWN CU + 1-#12 THWN CU GND IN 1" CONDUIT TO NEW DFS TCU/VFD FOR SCADA MONITORING OF BASE TANK. 2-#12 BASE TANK LEAK DETECTION ALARM, 2-#12 FOR BASE TANK FUEL LOW LEVEL ALARM, 2-#12 FOR BASE TANK FUEL HIGH LEVEL ALARM AND 4-#12 SPARE. CONTRACTOR SHALL COORDINATE/VERIFY CONNECTION LOCATION AND TYPE WITH ENCLOSURE MANUFACTURER (P402).
20. PROVIDE AND INSTALL 2/C-#16 SHIELDED (BELDEN 8719) IN 1" CONDUIT TO NEW DFS TCU/VFD FOR SCADA MONITORING OF BASE TANK LEVEL. CONTRACTOR SHALL COORDINATE/VERIFY CONNECTION LOCATION AND TYPE WITH ENCLOSURE MANUFACTURER (P403).

GENERAL NOTES :

1. THIS DRAWING SHOWS LAYOUTS AND DIMENSIONS BASED ON A PARTICULAR MANUFACTURER. THE CONTRACTOR SHALL COORDINATE DIMENSIONS, STUBUP LOCATIONS AND EQUIPMENT LOCATIONS WITH THE MANUFACTURER SUBMITTED/PROVIDED.
2. THE GENERATOR ENCLOSURE SHALL BE PROVIDED WITH A 60 AMPERE DISCONNECT SWITCH, 120/208V, 3ø, MCB LOADCENTER, 25 KVA, 480V-120/208V, 3ø, TRANSFORMER, LED LIGHTING FIXTURES, 3-WAY SWITCHES, DC LIGHTING FIXTURES, 60 MINUTE TIMER SWITCHES FOR DC LIGHT FIXTURES, DUPLEX GFCI RECEPTACLES, BASE TANK, BASE TANK SUPPLY AND RETURN PUMPS AND BASE TANK CONTROLLER AS NOTED AND SPECIFIED. ALL EQUIPMENT PROVIDED BY THE SUPPLIER OF THE ENCLOSURE PACKAGE SHALL BE PROVIDED AND INSTALLED WITH ALL ASSOCIATED CONDUIT AND CONDUCTORS FOR POWER AND CONTROLS AS REQUIRED FOR A COMPLETE AND FUNCTIONING UNIT.

TRICON ENGINEERING
777 S. Harbour Island Blvd, STE 350, TAMPA, FL 33602
813.227.9190
Certificate of Authorization No. 00031028

This document, together with the concepts and designs presented herein, as an instrument of service, is intended only for the specific purpose and client for which it was prepared. Reuse of and improper reliance on this document without written authorization and adaptation by Kimley-Horn and Associates, Inc. shall be without liability to Kimley-Horn and Associates, Inc.

No.	REVISIONS	DATE	BY

Kimley»Horn
© 2021 KIMLEY-HORN AND ASSOCIATES, INC.
100 2ND AVENUE SOUTH, SUITE 105-N, ST. PETERSBURG, FL 33701
PHONE: 727-547-3999
WWW.KIMLEY-HORN.COM CA 00000696

KHA PROJECT 148400067
DATE OCT 2021
SCALE AS SHOWN
DESIGNED BY TDT
DRAWN BY JLH
CHECKED BY GLW

BAYSHORE YACHT BASIN

LICENSED PROFESSIONAL
TIMOTHY THOMAS, P.E
FL LICENSE NUMBER 47079
DATE:

GENERATOR DETAILS

SHEET NUMBER
E-7

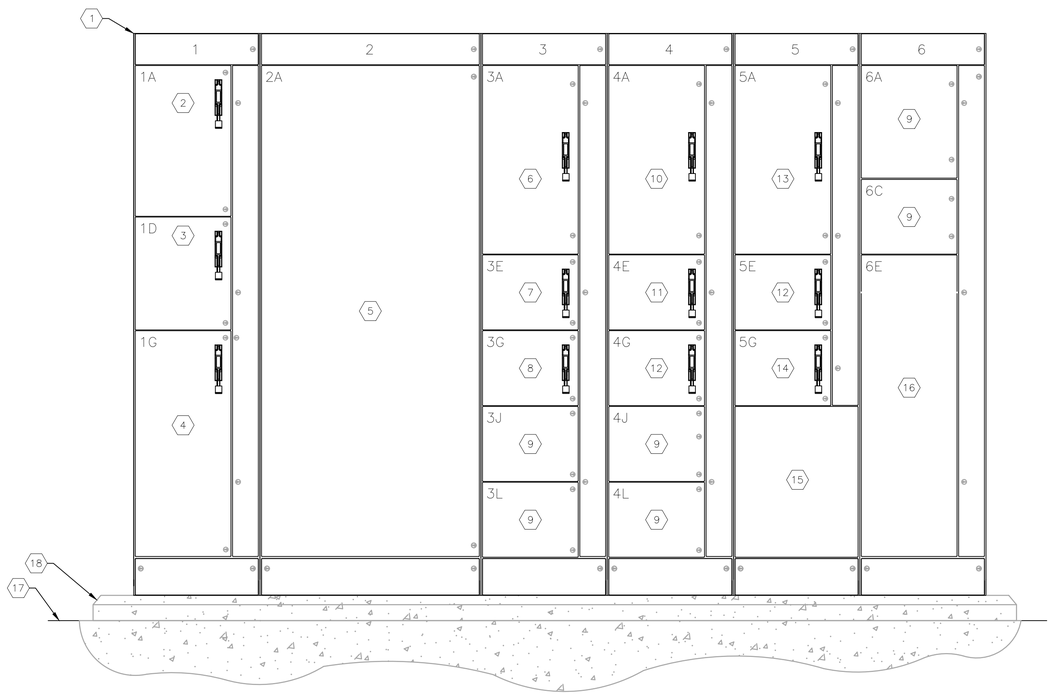

MOTOR CONTROL SYSTEM ELEVATION (A) E-6 | E-8

SCALE: NOT TO SCALE

KEYED NOTES:

1. NEW ARC FLASH COMPLIANT MOTOR CONTROL CENTER: 'MCC-1'. REFER TO ONE-LINE DIAGRAM ON SHEET E-9 FOR REQUIREMENTS.
2. 480V, 3-POLE, 30A CIRCUIT BREAKER FOR SURGE PROTECTION DEVICE (SPD). DISCONNECTING MEANS. SPD TO BE ASCO 450277YP20ACCN20.
3. 480V, 3-POLE, 30A CIRCUIT BREAKER DISCONNECT FOR VOLTAGE AND PHASE MONITOR RELAYS. PROVIDE CT'S. CTP'S AND FUSES AS REQUIRED.
4. 480V, 600A, 3-POLE MAIN CIRCUIT BREAKER.
5. 480V, 600A, 3-POLE, SOLID NEUTRAL AUTOMATIC TRANSFER SWITCH (ATS).
6. 200A, 3-POLE, 480V CIRCUIT BREAKER FOR NEW WET WELL PUMP #1.
7. 20A, 3-POLE, 480V CIRCUIT BREAKER FOR ODOR CONTROL UNIT.
8. 50A, 3-POLE, 480V CIRCUIT BREAKER FOR GENERATOR ANCILLARY EQUIPMENT.
9. PREPARED SPACE FOR FUTURE USE.
10. 200A, 3-POLE, 480V CIRCUIT BREAKER FOR NEW WET WELL PUMP #2.
11. 15A, 3-POLE, 480V CIRCUIT BREAKER FOR CRANE HOIST.
12. 20A, 3-POLE, 480V CIRCUIT BREAKER FOR FUTURE USE.
13. 200A, 3-POLE, 480V CIRCUIT BREAKER FOR NEW WET WELL PUMP #3.
14. 70A, 3-POLE, 480V CIRCUIT BREAKER FOR 45 KVA TRANSFORMER 'T-1' (KEYED NOTE #4).
15. 480V-120/208V, 3ø, 45 KVA TRANSFORMER 'T-1'.
16. 125A MAIN CIRCUIT BREAKER, 120/208V, 3ø, 4-WIRE, 42 POLE PANELBOARD 'LP'.
17. FINISHED FLOOR OF PROPOSED ELECTRICAL BUILDING.
18. PROVIDE NEW 2" HIGH CONCRETE HOUSEKEEPING PAD WITH 45° CHAMFERED EDGES. HOUSEKEEPING PADS SHALL EXTEND 2" BEYOND MCC.

This document, together with the concepts and designs presented herein, as an instrument of service, is intended only for the specific purpose and client for which it was prepared. Reuse of and improper reliance on this document without written authorization and adaptation by Kimley-Horn and Associates, Inc. shall be without liability to Kimley-Horn and Associates, Inc.

TRICON ENGINEERING
777 S. Harbour Island Blvd, STE 350, TAMPA, FL 33602
813.227.9190
Certificate of Authorization No. 00031028

No.	REVISIONS	DATE	BY

Kimley»Horn
© 2021 KIMLEY-HORN AND ASSOCIATES, INC.
100 2ND AVENUE SOUTH, SUITE 105-N, ST. PETERSBURG, FL 33701
PHONE: 727-547-3999
WWW.KIMLEY-HORN.COM CA 00000696

KHA PROJECT 148400067
DATE OCT 2021
SCALE AS SHOWN
DESIGNED BY TDT
DRAWN BY JLH
CHECKED BY GLW

BAYSHORE YACHT BASIN

LICENSED PROFESSIONAL
TIMOTHY THOMAS, P.E
FL LICENSE NUMBER 47079
DATE:

MOTOR CONTROL CENTER ELEVATION

SHEET NUMBER
E-8

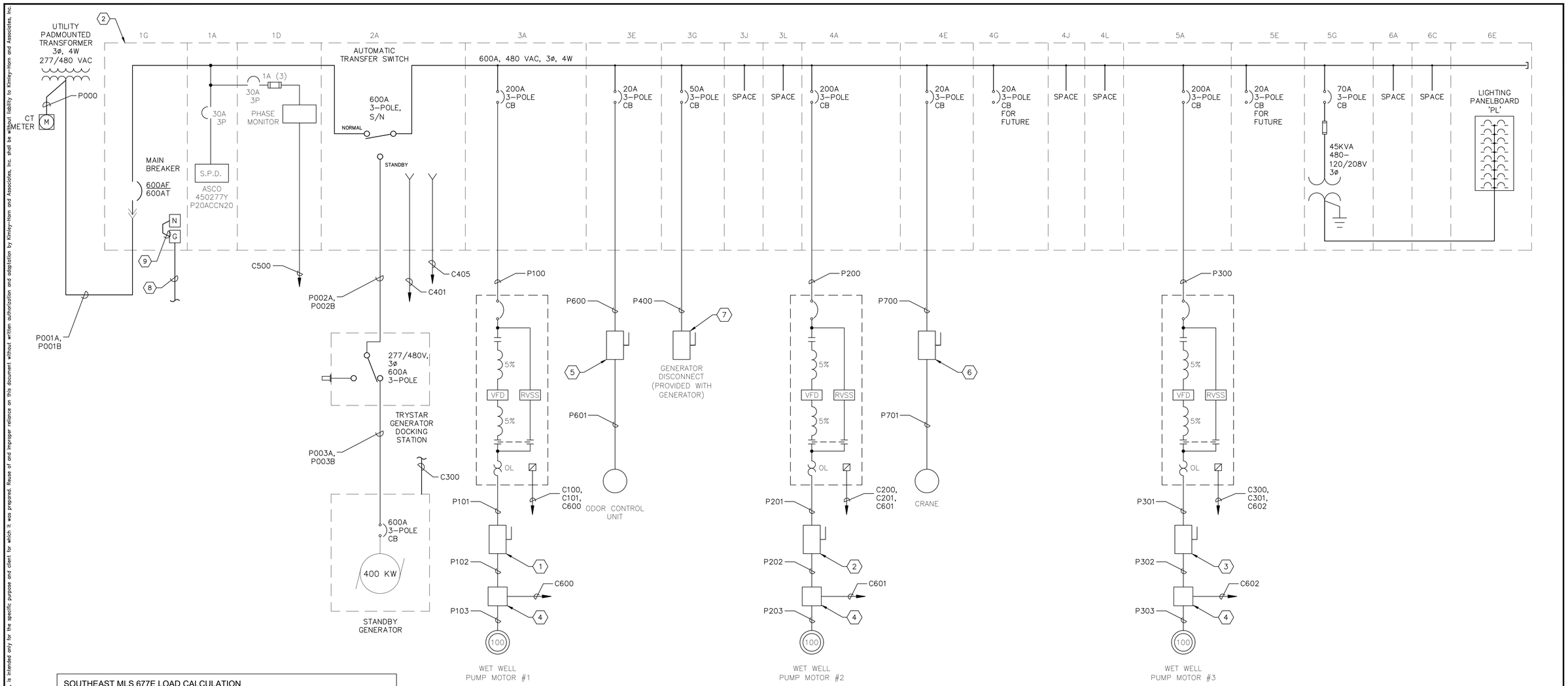

SOUTHEAST MLS 677E LOAD CALCULATION		
EQUIPMENT	H.P.	DEMAND AMPERES
PANELBOARD 'PL' (VIA TRANSFORMER)		25.0
WET WELL PUMP #1	100	125.0
WET WELL PUMP #2	100	125.0
WET WELL PUMP #3	100	125.0
ODOR CONTROL UNIT		7.0
CRANE		7.0
HVAC		12.0
GENERATOR ANCILLARY EQUIPMENT		20.0
TOTAL LOAD		446.0

NOTE: NEW ELECTRICAL SERVICE TO BE RATED FOR 600 AMPERES.

KEYED NOTES:

1. PROVIDE AND INSTALL MOTOR DISCONNECT FOR PUMP #1. 600V, 200A, 3-POLE, NON-FUSED IN NEMA 4X STAINLESS STEEL ENCLOSURE.
2. PROVIDE AND INSTALL MOTOR DISCONNECT FOR PUMP #2. 600V, 200A, 3-POLE, NON-FUSED IN NEMA 4X STAINLESS STEEL ENCLOSURE.
3. PROVIDE AND INSTALL MOTOR DISCONNECT FOR PUMP #3. 600V, 200A, 3-POLE, NON-FUSED IN NEMA 4X STAINLESS STEEL ENCLOSURE.
4. PROVIDE AND INSTALL NEMA 4X STAINLESS STEEL JUNCTION BOX. REFER TO SHEETS E-12 AND E-13.
5. PROVIDE AND INSTALL DISCONNECT FOR ODOR CONTROL UNIT. 600V, 30A, 3-POLE, NON-FUSED IN NEMA 4X STAINLESS STEEL ENCLOSURE.
6. PROVIDE AND INSTALL MOTOR DISCONNECT FOR CRANE HOIST. 600V, 30A, 3-POLE, NON-FUSED IN NEMA 4X STAINLESS STEEL ENCLOSURE.
7. DISCONNECT PROVIDED AS PART OF THE GENERATOR SET.
8. PROVIDE AND INSTALL BARE 2/0 AWG COPPER GROUNDING ELECTRODE CONDUCTOR IN 1" CONDUIT DOWN TO GRADE LEVEL AND CONNECT TO GROUNDING GRID.
9. PROVIDE AND INSTALL 2/0 AWG THWN COPPER BONDING JUMPER.

TRICON ENGINEERING
777 S. Harbour Island Blvd, STE 350, TAMPA, FL 33602
813.227.9190
Certificate of Authorization No. 00031028

No.	REVISIONS	DATE	BY

Kimley»Horn
© 2021 KIMLEY-HORN AND ASSOCIATES, INC.
100 2ND AVENUE SOUTH, SUITE 105-N, ST. PETERSBURG, FL 33701
PHONE: 727-547-3999
WWW.KIMLEY-HORN.COM CA 00000696

KHA PROJECT 148400067
DATE OCT 2021
SCALE AS SHOWN
DESIGNED BY TDT
DRAWN BY JLH
CHECKED BY GLW

BAYSHORE YACHT BASIN

LICENSED PROFESSIONAL
TIMOTHY THOMAS, P.E
FL LICENSE NUMBER 47079
DATE:

MOTOR CONTROL CENTER ONE-LINE DIAGRAM

SHEET NUMBER
E-9

This document, together with the concepts and designs presented herein, as an instrument of service, is intended only for the specific purpose and client for which it was prepared. Reuse of and improper reliance on this document without written authorization and adaptation by Kimley-Horn and Associates, Inc. shall be without liability to Kimley-Horn and Associates, Inc.

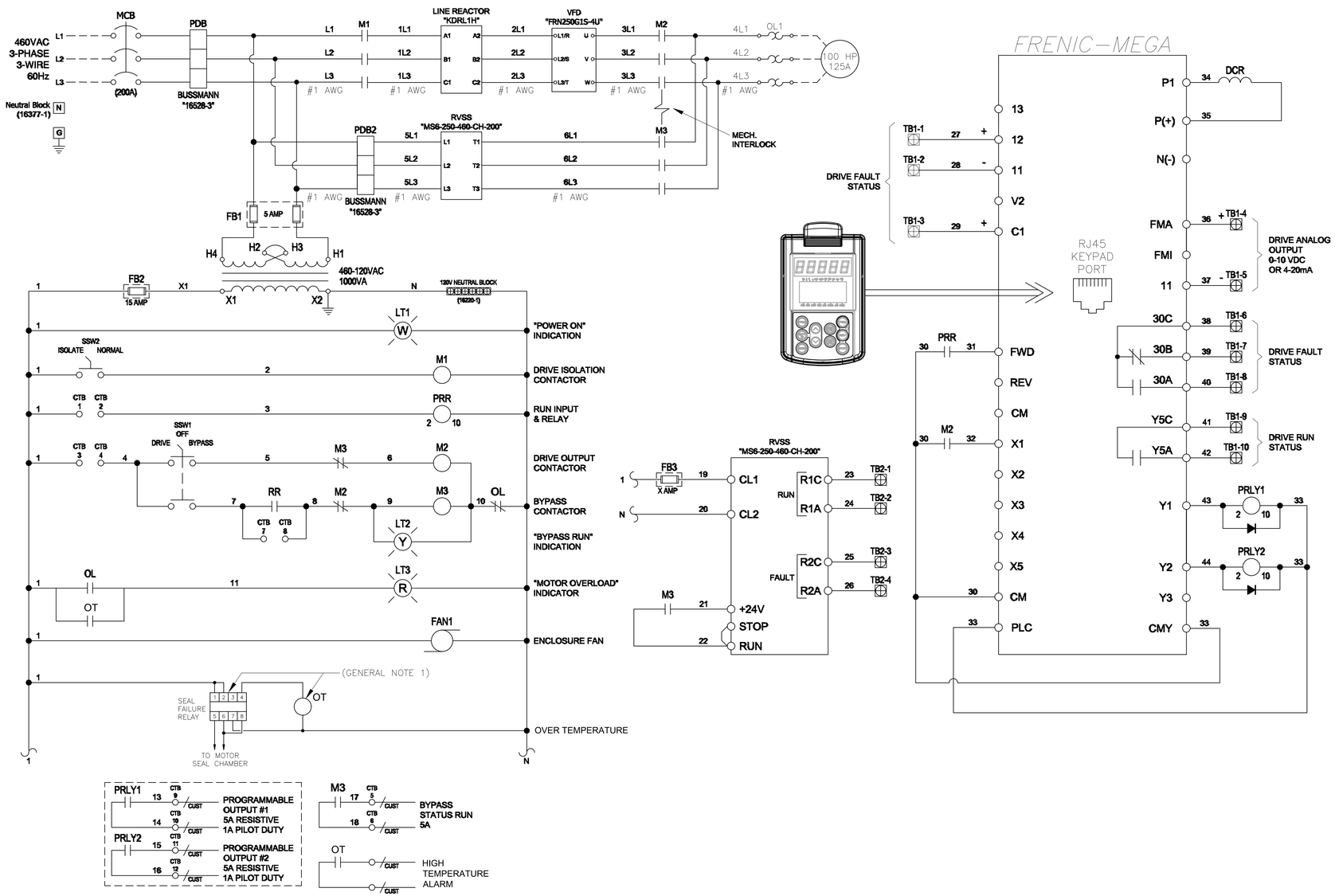

This document, together with the concepts and designs presented herein, as an instrument of service, is intended only for the specific purpose and client for which it was prepared. Reuse of and improper reliance on this document without written authorization and adaptation by Kimley-Horn and Associates, Inc. shall be without liability to Kimley-Horn and Associates, Inc.

TRICON ENGINEERING
777 S. Harbour Island Blvd, STE 350, TAMPA, FL 33602
813.227.9190
Certificate of Authorization No. 00031028

No.	REVISIONS	DATE	BY

Kimley»Horn

© 2021 KIMLEY-HORN AND ASSOCIATES, INC.

100 2ND AVENUE SOUTH, SUITE 105-N, ST. PETERSBURG, FL 33701
PHONE: 727-547-3999
WWW.KIMLEY-HORN.COM CA 00000696

KHA PROJECT 148400067
DATE OCT 2021
SCALE AS SHOWN
DESIGNED BY TDT
DRAWN BY JLH
CHECKED BY GLW

BAYSHORE YACHT BASIN

LICENSED PROFESSIONAL
TIMOTHY THOMAS, P.E
FL LICENSE NUMBER 47079
DATE:

TYPICAL VFD WIRING DIAGRAM

SHEET NUMBER
E-10

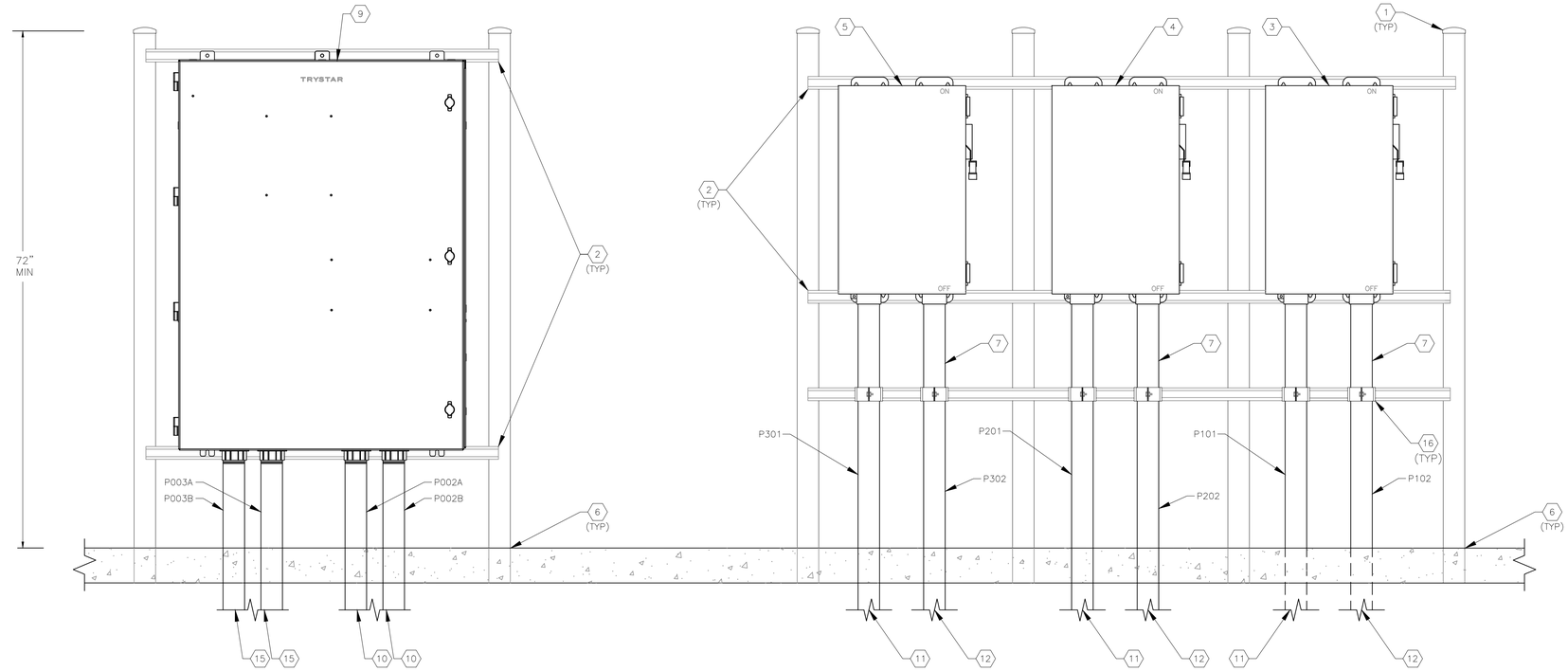

NEW WET WELL ELECTRICAL EQUIPMENT RACK
FRONT ELEVATION (A, E-2 / E-11)
SCALE: NOT TO SCALE

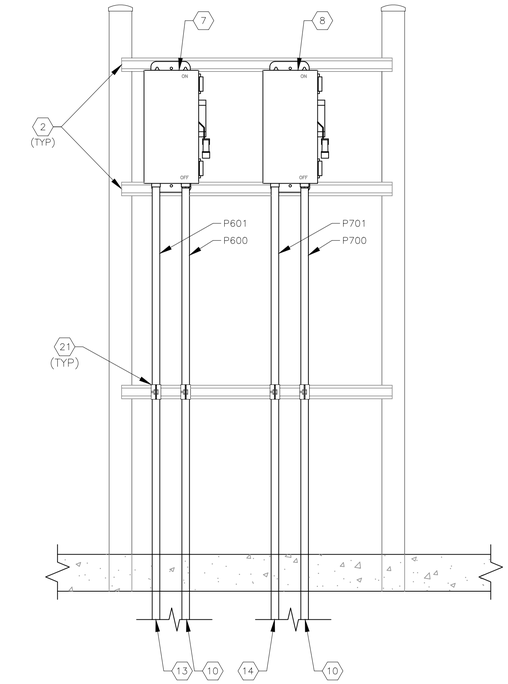

DISCONNECT RACK
FRONT ELEVATION (B, E-2 / E-11)
SCALE: NOT TO SCALE

KEYED NOTES:

1. PROVIDE AND INSTALL FOUR (4), 3 INCH, 316 STAINLESS STEEL SCHEDULE 40 PIPES.
2. PROVIDE AND INSTALL 1-5/8" SOLID 316 STAINLESS STEEL UNISTRUT WITH GREY END CAPS.
3. PROVIDE AND INSTALL NEW MOTOR DISCONNECT FOR PUMP #1. 600V, 200A, 3-POLE, NON-FUSED IN NEMA 4X STAINLESS STEEL ENCLOSURE.
4. PROVIDE AND INSTALL NEW MOTOR DISCONNECT FOR PUMP #2. 600V, 200A, 3-POLE, NON-FUSED IN NEMA 4X STAINLESS STEEL ENCLOSURE.
5. PROVIDE AND INSTALL NEW MOTOR DISCONNECT FOR PUMP #3. 600V, 200A, 3-POLE, NON-FUSED IN NEMA 4X STAINLESS STEEL ENCLOSURE.
6. STAINLESS STEEL SUPPORT POSTS SHALL BE TREATED WITH TWO COATS OF BITUMINOUS EPOXY TO 16 MILS WHERE EMBEDDED IN CONCRETE.
7. PROVIDE AND INSTALL NEW ODOR CONTROL UNIT DISCONNECT. 600V, 30A, 3-POLE, NON-FUSED IN NEMA 4X STAINLESS STEEL ENCLOSURE.
8. PROVIDE AND INSTALL NEW CRANE DISCONNECT. 600V, 30A, 3-POLE, NON-FUSED IN NEMA 4X STAINLESS STEEL ENCLOSURE.
9. PROPOSED DOCKING STATION. 277/480V, 3-PHASE, 4-WIRE, 600A WITH SOLID NEUTRAL IN NEMA 4X STAINLESS STEEL ENCLOSURE. TRYSTAR TMTS-065W-LLM-I.
10. CONTINUES TO MOTOR CONTROL CENTER.
11. CONTINUES TO ASSOCIATED JUNCTION BOX ADJACENT TO WET WELL.
12. CONTINUES TO ASSOCIATED VFD.
13. CONTINUES TO ODOR CONTROL UNIT.
14. CONTINUES TO CRANE.
15. CONTINUES TO GENERATOR.
16. PROVIDE 316 STAINLESS STEEL CONDUIT CLAMP (TYP).

TRICON ENGINEERING
777 S. Harbour Island Blvd, STE 350, TAMPA, FL 33602
813.227.9190
Certificate of Authorization No. 00031028

No.	REVISIONS	DATE	BY

Kimley»Horn
© 2021 KIMLEY-HORN AND ASSOCIATES, INC.
100 2ND AVENUE SOUTH, SUITE 105-N, ST. PETERSBURG, FL 33701
PHONE: 727-547-3999
WWW.KIMLEY-HORN.COM CA 00000696

KHA PROJECT 148400067
DATE OCT 2021
SCALE AS SHOWN
DESIGNED BY TDT
DRAWN BY JLH
CHECKED BY GLW

BAYSHORE YACHT BASIN

LICENSED PROFESSIONAL
TIMOTHY THOMAS, P.E
FL LICENSE NUMBER 47079
DATE:

EQUIPMENT RACK ELEVATIONS

SHEET NUMBER
E-11

This document, together with the concepts and designs presented herein, as an instrument of service, is intended only for the specific purpose and client for which it was prepared. Reuse of and improper reliance on this document without written authorization and adaptation by Kimley-Horn and Associates, Inc. shall be without liability to Kimley-Horn and Associates, Inc.

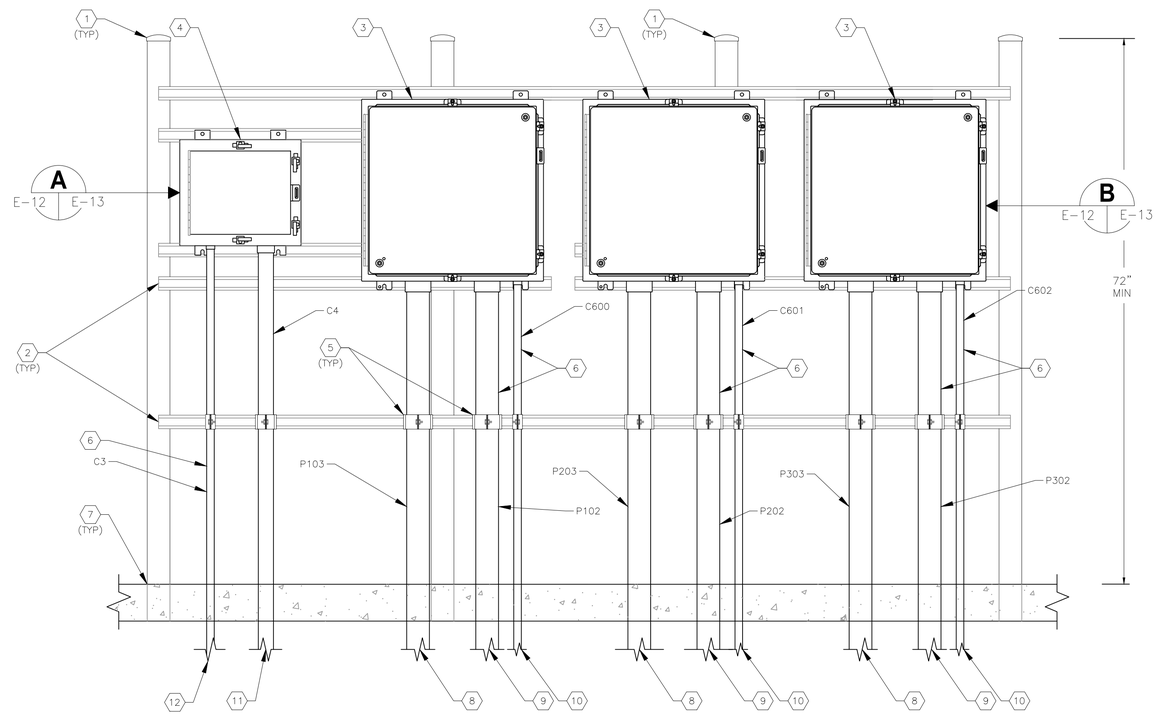

NEW WET WELL JUNCTION BOX
RACK ELEVATION
SCALE: NOT TO SCALE

A
E-2 | E-12

KEYED NOTES:

1. PROVIDE AND INSTALL FOUR (4), 3 INCH, 316 STAINLESS STEEL SCHEDULE 40 PIPES.
2. PROVIDE AND INSTALL 1-5/8" SOLID 316 STAINLESS STEEL UNISTRUT WITH GREY END CAPS. INSTALL FLAT SIDE OUT.
3. PROVIDE AND INSTALL 24" x 24" x 8" NEMA 4X, 304 STAINLESS STEEL ENCLOSURE POWDER COATED WHITE FOR PUMP MOTOR CONDUCTORS. SCHAEFER'S PART #SPN4SS-24248. REFER TO DETAIL ON SHEET E-13.
4. PROVIDE AND INSTALL 14" x 16" x 8" NEMA 4X, 304 STAINLESS STEEL ENCLOSURE. POWDER COATED WHITE FOR INSTRUMENTATION CONDUCTORS. SCHAEFER'S PART #SPN4SS-14168-587. REFER TO DETAIL ON SHEET E-13.
5. PROVIDE 316 STAINLESS STEEL CONDUIT CLAMP (TYP).
6. MANATEE COUNTY SHALL PROVIDE PROVISIONS FOR MEETING THE SEALING REQUIREMENTS PER NEC 501.15(B)(2).
7. STAINLESS STEEL SUPPORT POSTS SHALL BE TREATED WITH TWO COATS OF BITUMINOUS EPOXY TO 16 MILS WHERE EMBEDDED IN CONCRETE (TYP).
8. CONTINUES TO ASSOCIATED PUMP IN WET WELL.
9. CONTINUES TO ASSOCIATED DISCONNECT ON ELEVATED PLATFORM.
10. CONTINUES TO ASSOCIATED VFD.
11. CONTINUES TO FLOATS IN WET WELL.
12. CONTINUES TO DFS TCU/VFD CONTROL PANEL.

TRICON ENGINEERING
777 S. Harbour Island Blvd, STE 350, TAMPA, FL 33602
813.227.9190
Certificate of Authorization No. 00031028

This document, together with the concepts and designs presented herein, as an instrument of service, is intended only for the specific purpose and client for which it was prepared. Reuse of and improper reliance on this document without written authorization and adaptation by Kimley-Horn and Associates, Inc. shall be without liability to Kimley-Horn and Associates, Inc.

No.	REVISIONS	DATE	BY

Kimley»Horn
© 2021 KIMLEY-HORN AND ASSOCIATES, INC.
100 2ND AVENUE SOUTH, SUITE 105-N, ST. PETERSBURG, FL 33701
PHONE: 727-547-3999
WWW.KIMLEY-HORN.COM CA 00000696

KHA PROJECT 148400067
DATE OCT 2021
SCALE AS SHOWN
DESIGNED BY TDT
DRAWN BY JLH
CHECKED BY GLW

BAYSHORE YACHT BASIN

LICENSED PROFESSIONAL
TIMOTHY THOMAS, P.E
FL LICENSE NUMBER 47079
DATE:

WET WELL JUNCTION BOX
RACK ELEVATION

SHEET NUMBER
E-12

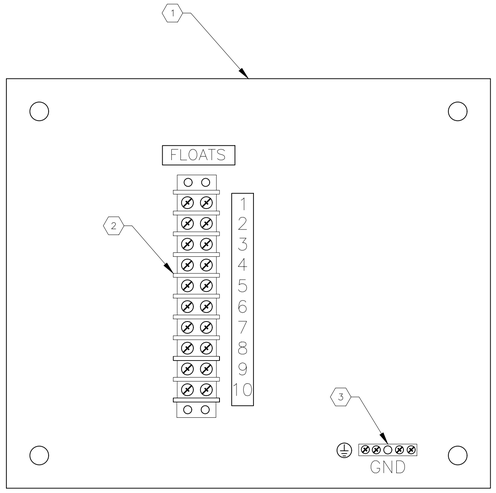

WET WELL INSTRUMENTATION
JUNCTION BOX INTERIOR DETAIL **A**
SCALE: NOT TO SCALE E-12 | E-13

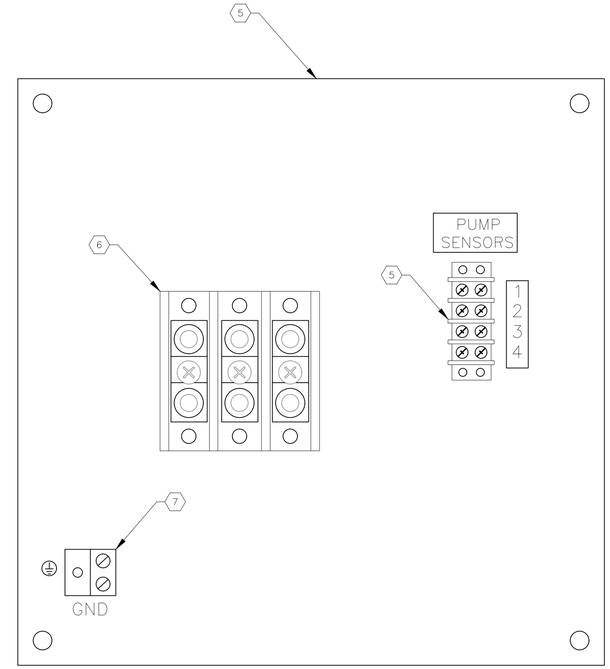

TYPICAL PUMP WET WELL
JUNCTION BOX DETAIL **B**
SCALE: NOT TO SCALE E-12 | E-13

KEYED NOTES:

1. PROVIDE AND INSTALL 14" x 16" SUBPANEL SCHAEFER'S PART #SPP-1416.
2. PROVIDE AND INSTALL 10-POINT TERMINAL BLOCK. IDEAL #89-210 FOR FLOAT CONDUCTORS.
3. PROVIDE AND INSTALL GROUND BAR. EATON PART #GBK5.
4. PROVIDE AND INSTALL 24" x 24" SUBPANEL SCHAEFER'S PART #SPP-2424.
5. PROVIDE AND INSTALL 4-POINT TERMINAL BLOCK. IDEAL #89-204 FOR PUMP MOTOR SENSOR CONDUCTORS.
6. PROVIDE AND INSTALL PUMP MOTOR POWER DISTRIBUTION BLOCK. MARATHON PART #1323572. PROVIDE COVER FOR POWER DISTRIBUTION BLOCK.
7. PROVIDE AND INSTALL TWO BARREL MECHANICAL LUG. BLACKBURN PART #3LN34.

GENERAL NOTES:

1. ALL JUNCTION BOX GROUNDS MUST BE BONDED TO THE CONTROL PANEL GROUND.
2. PROVIDE #12 AWG COPPER THWN (GREEN) BOND BETWEEN ENCLOSURE AND ENCLOSURE DOOR.

TRICON ENGINEERING
777 S. Harbour Island Blvd, STE 350, TAMPA, FL 33602
813.227.6190
Certificate of Authorization No. 00031028

This document, together with the concepts and designs presented herein, as an instrument of service, is intended only for the specific purpose and client for which it was prepared. Reuse of and improper reliance on this document without written authorization and adaptation by Kimley-Horn and Associates, Inc. shall be without liability to Kimley-Horn and Associates, Inc.

No.	REVISIONS	DATE	BY

Kimley»Horn
© 2021 KIMLEY-HORN AND ASSOCIATES, INC.
100 2ND AVENUE SOUTH, SUITE 105-N, ST. PETERSBURG, FL 33701
PHONE: 727-547-3999
WWW.KIMLEY-HORN.COM CA 00000696

KHA PROJECT 148400067
DATE OCT 2021
SCALE AS SHOWN
DESIGNED BY TDT
DRAWN BY JLH
CHECKED BY GLW

BAYSHORE YACHT BASIN

LICENSED PROFESSIONAL
TIMOTHY THOMAS, P.E
FL LICENSE NUMBER 47079
DATE:

WET WELL JUNCTION BOX DETAILS

SHEET NUMBER
E-13

NEW PANEL 'LP' SCHEDULE

PANEL 'LP' ; SQUARE D CO. TYPE NQOD ; 120/208 VOLTS, 3ø, 4W ; 200 AMP MAIN CIRCUIT BREAKER ; 10K AIC RATING ; SURFACE ENCLOSURE TOP AT 5'-6" AFF

EQUIPMENT SERVED	CIRCUIT BREAKER			KVA/PHASE			CIRC.	CIRC.	KVA/PHASE			CIRCUIT BREAKER			EQUIPMENT SERVED
	POLE	AMPS	FRAME	A	B	C	NO.	NO.	A	B	C	POLE	AMPS	FRAME	
RECEPTACLE CIRCUIT	1	20	QOB	0.4			1	2	0.8			1	30	QOB	ELECTRICAL ROOM LIGHTING
RECEPTACLE CIRCUIT	1	20	QOB		0.2		3	4		0.1		1	20	QOB	BUILDING EXTERIOR LIGHTING
HVAC MAINTENANCE RECPTACLE	1	20	QOB			0.2	5	6			0.1	1	20	QOB	AREA LIGHT 'C1'
DFS TCU/VFD PANEL	1	20	QOB	0.8			7	8	0.1			1	20	QOB	AREA LIGHT 'C2'
FLOW METER CONVERTER	1	20	QOB		0.2		9	10				1	20	QOB	SPARE
BUILDING MINI SPLIT SYSTEM	1	40	QOB			4.5	11	12				1	20	QOB	SPARE
" "	–	–	–	4.5			13	14				--	--	--	SPACE
SPACE	--	--	--				15	16				--	--	--	SPACE
SPACE	--	--	--				17	18				--	--	--	SPACE
SPACE	--	--	--				19	20				--	--	--	SPACE
SPACE	--	--	--				21	22				--	--	--	SPACE
SPACE	--	--	--				23	24				--	--	--	SPACE
SPACE	--	--	--				25	26				--	--	--	SPACE
SPACE	--	--	--				27	28				--	--	--	SPACE
SPACE	--	--	--				29	30				--	--	--	SPACE
SPACE	--	--	--				31	32				--	--	--	SPACE
SPACE	--	--	--				33	34				--	--	--	SPACE
SPACE	--	--	--				35	36				--	--	--	SPACE
SPACE	--	--	--				37	38				--	--	--	SPACE
SPACE	--	--	--				39	40				--	--	--	SPACE
SPACE	--	--	--				41	42				--	--	--	SPACE
SUB-TOTAL KVA				5.7	0.4	4.7			0.9	0.1	0.1				

TOTAL CONNECTED LOAD = 11.9 KVA

TOTAL DEMAND LOAD = 11.9 KVA

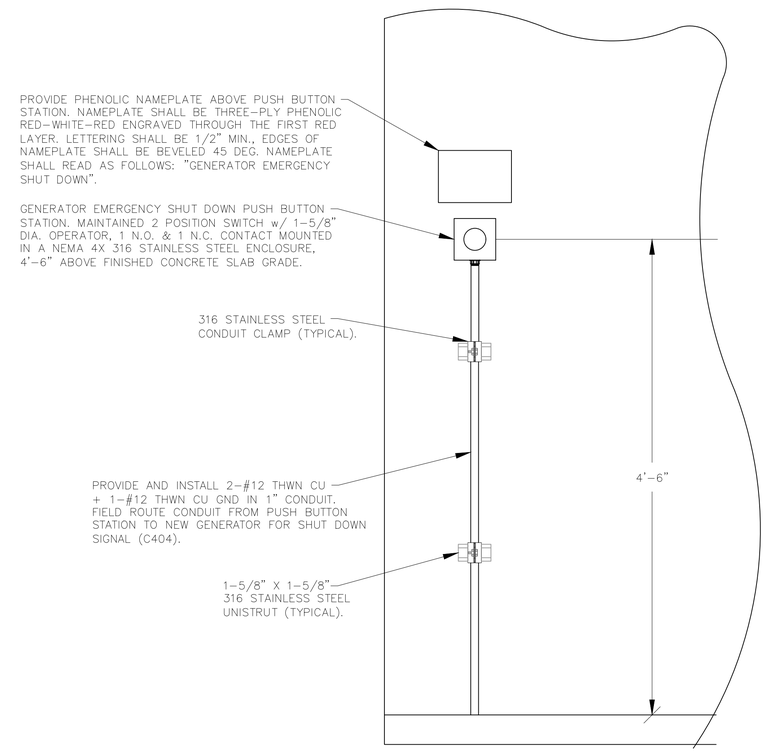

EMERGENCY SHUTOFF PUSH BUTTON ELEVATION

SCALE : NOT TO SCALE

A
E-6 | E-14

TRICON ENGINEERING
777 S. Harbour Island Blvd, STE 350, TAMPA, FL 33602
813.227.9190
Certificate of Authorization No. 00031028

This document, together with the concepts and designs presented herein, as an instrument of service, is intended only for the specific purpose and client for which it was prepared. Reuse of and improper reliance on this document without written authorization and adaptation by Kimley-Horn and Associates, Inc. shall be without liability to Kimley-Horn and Associates, Inc.

No.	REVISIONS	DATE	BY

Kimley»Horn

© 2021 KIMLEY-HORN AND ASSOCIATES, INC.

100 2ND AVENUE SOUTH, SUITE 105-N, ST. PETERSBURG, FL 33701
PHONE: 727-547-3999
WWW.KIMLEY-HORN.COM CA 00000696

KHA PROJECT 148400067
DATE

SCALE AS SHOWN
DESIGNED BY TDT
DRAWN BY JLH
CHECKED BY GLW

BAYSHORE YACHT BASIN

LICENSED PROFESSIONAL
TIMOTHY THOMAS, P.E
FL LICENSE NUMBER 47079
DATE:

PANELBOARD SCHEDULE AND ESO DETAIL

SHEET NUMBER
E-14

This document, together with the concepts and designs presented herein, as an instrument of service, is intended only for the specific purpose and client for which it was prepared. Reuse of and improper reliance on this document without written authorization and adaptation by Kimley-Horn and Associates, Inc. shall be without liability to Kimley-Horn and Associates, Inc.

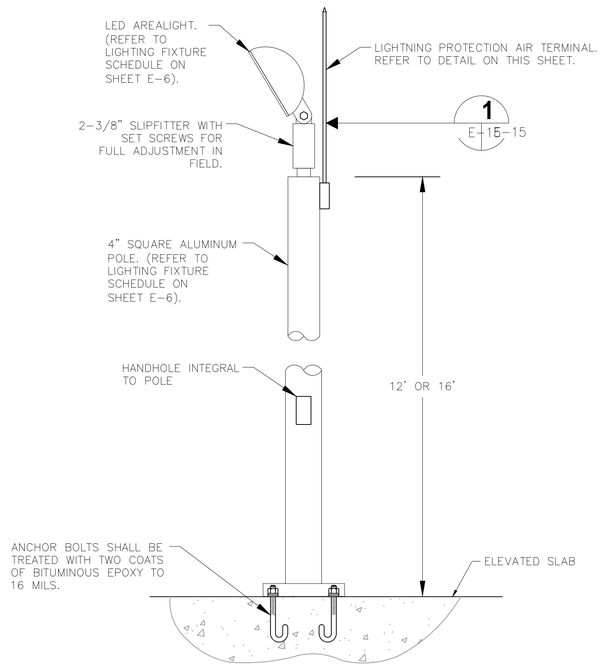

TYPICAL AREA LIGHT MOUNTING DETAIL

SCALE : NOT TO SCALE

1 E-2 E-15 E-4

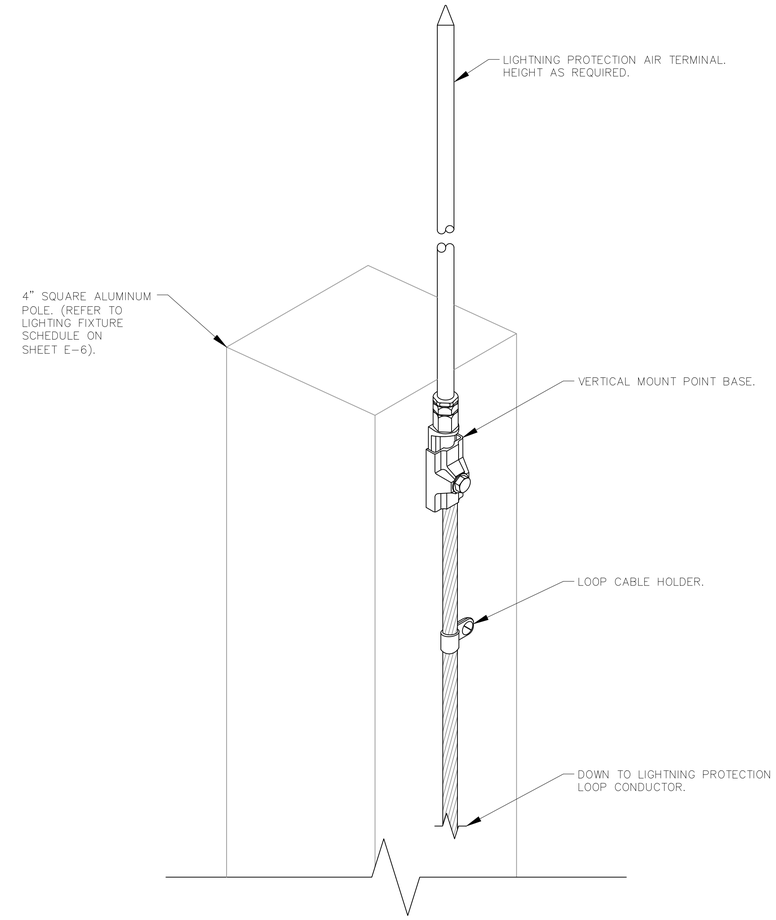

TYPICAL AREA LIGHT LIGHTNING PROTECTION DETAIL

SCALE : NOT TO SCALE

1 E-15 E-15

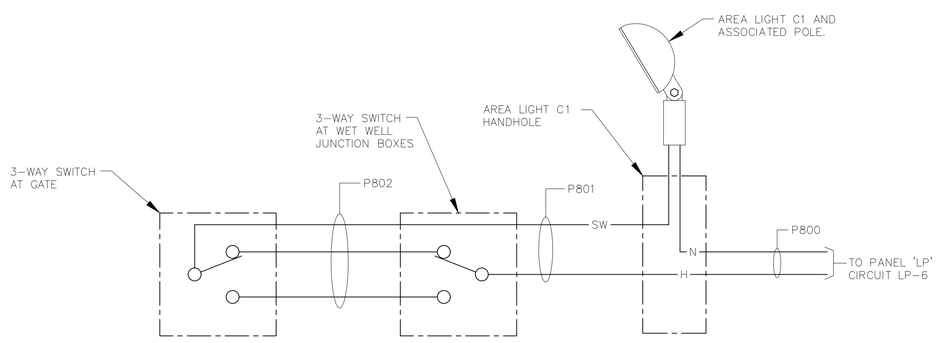

AREA LIGHT C1 WIRING SCHEMATIC

NOTE: GROUNDING CONDUCTORS NOT SHOWN FOR CLARITY.

TRICON ENGINEERING
777 S. Harbour Island Blvd, STE 350, TAMPA, FL 33602
813.227.9190
Certificate of Authorization No. 00031028

No.	REVISIONS	DATE	BY

Kimley»Horn
© 2021 KIMLEY-HORN AND ASSOCIATES, INC.
100 2ND AVENUE SOUTH, SUITE 105-N, ST. PETERSBURG, FL 33701
PHONE: 727-547-3999
WWW.KIMLEY-HORN.COM CA 00000696

KHA PROJECT 148400067
DATE
SCALE AS SHOWN
DESIGNED BY TDT
DRAWN BY JLH
CHECKED BY GLW

BAYSHORE YACHT BASIN

LICENSED PROFESSIONAL
TIMOTHY THOMAS, P.E
FL LICENSE NUMBER 47079
DATE:

AREA LIGHT DETAILS

SHEET NUMBER
E-15

This document, together with the concepts and designs presented herein, as an instrument of service, is intended only for the specific purpose and client for which it was prepared. Reuse of and improper reliance on this document without written authorization and adaptation by Kimley-Horn and Associates, Inc. shall be without liability to Kimley-Horn and Associates, Inc.

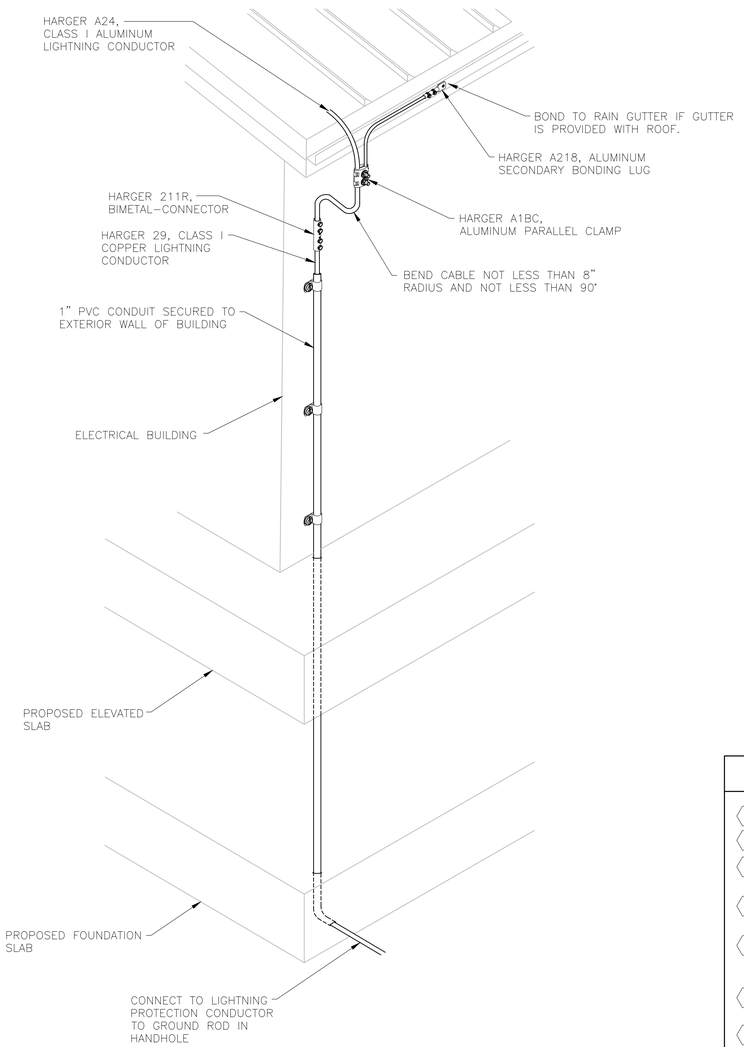

TYPICAL HANDRAIL AIR TERMINAL INSTALLATION DETAIL

SCALE : N.T.S.

1 E-4 | E-16

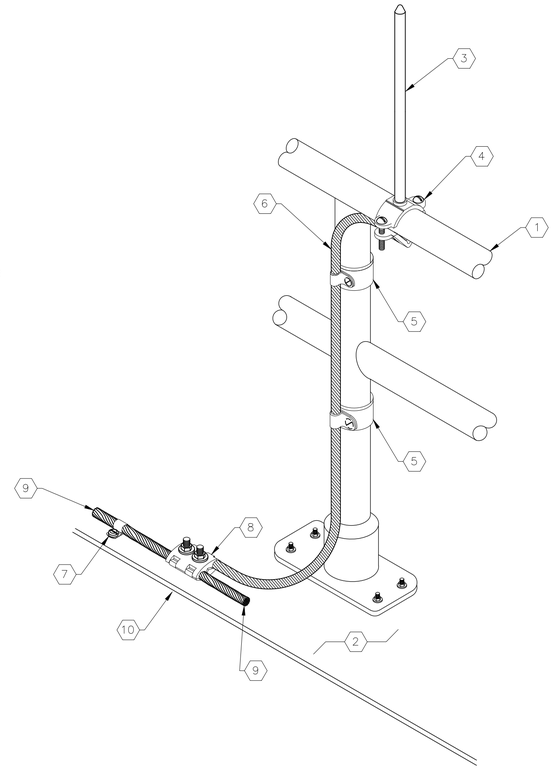

TYPICAL HANDRAIL AIR TERMINAL INSTALLATION DETAIL

SCALE : N.T.S.

2 E-3 | E-16

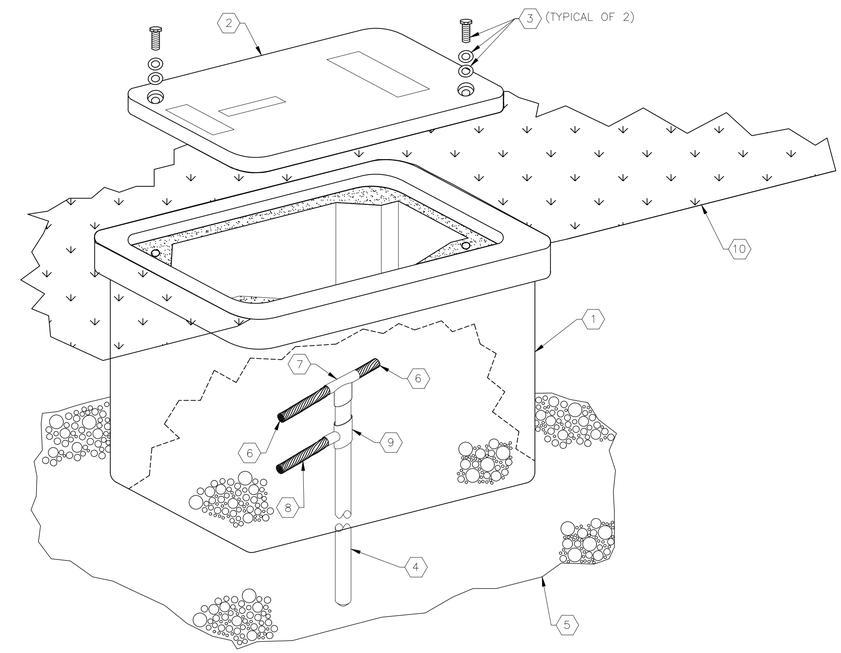

GROUND ROD HANDHOLE DETAIL

SCALE : N.T.S.

3 E-4 | E-16 E-5

HANDRAIL AIR TERMINAL KEYED NOTES:

1. PROPOSED HANDRAIL.
2. TOP OF ELEVATED PLATFORM SLAB.
3. CONTRACTOR TO PROVIDE AND INSTALL 1/2" X 18" SOLID ALUMINUM, BLUNT TIP AIR TERMINAL. THOMPSON LIGHTNING PROTECTION (TLP) A56BT OR APPROVED EQUAL (WITHOUT ADAPTER).
4. CONTRACTOR TO PROVIDE AND INSTALL ALUMINUM PIPE RAIL BASE POINT. THOMPSON LIGHTNING PROTECTION (TLP) A240P-4 OR APPROVED EQUAL.
5. CONTRACTOR TO PROVIDE AND INSTALL ALUMINUM WRAP-AROUND STRAP AND CABLE CLIP TO SECURE LIGHTNING PROTECTION CONDUCTOR. THOMPSON LIGHTNING PROTECTION (TLP) A188M OR APPROVED EQUAL.
6. CONTRACTOR TO PROVIDE AND INSTALL BARE ALUMINUM LIGHTNING PROTECTION CONDUCTOR. MINIMUM BEND RADIUS NOT LESS THAN 8 INCHES.
7. CONTRACTOR TO PROVIDE AND INSTALL ALUMINUM LOOP CABLE HOLDER. THOMPSON LIGHTNING PROTECTION (TLP) A165 OR APPROVED EQUAL. LIGHTNING PROTECTION CONDUCTOR SHALL BE FASTENED EVERY 3'-0" MINIMUM.
8. CONTRACTOR TO PROVIDE AND INSTALL ALUMINUM CABLE SPLICER. THOMPSON LIGHTNING PROTECTION (TLP) A423 OR APPROVED EQUAL.
9. MAIN LIGHTNING PROTECTION CONDUCTOR TO CONTINUE.
10. EDGE OF ELEVATED PLATFORM SLAB.

HANDHOLE KEYED NOTES:

1. CONTRACTOR TO PROVIDE AND INSTALL 13" x 24" x 18" POLYMER CONCRETE HANDHOLE. REFER ALSO TO SPECIFICATIONS.
2. 20,000 POUND RATED LID. PROVIDE RECESSED IDENTIFICATION MARKING OF "LIGHTNING PROTECTION" PERMANENTLY INDENTED IN THE COVER.
3. STAINLESS STEEL BOLTS AND ASSOCIATED HARDWARE. BOLTS SHALL BE A MINIMUM OF 5/8".
4. CONTRACTOR TO PROVIDE AND INSTALL A 3/4" DIAMETER COPPER-CLAD GROUND ROD, MINIMUM OF 20 FEET IN LENGTH (WHEN REQUIRED).
5. CONTRACTOR TO PROVIDE AND INSTALL A BED OF PEA ROCK GRAVEL (6" MINIMUM DEPTH, 3" MINIMUM EXTERIOR OF HANDHOLE) INSIDE THE BOTTOM OF THE HANDHOLE.
6. CONTRACTOR TO PROVIDE AND INSTALL NEW 4/0 AWG BARE COPPER GROUNDING GRID CONDUCTOR BETWEEN ASSOCIATED GROUND RODS.
7. CONTRACTOR TO PROVIDE AND INSTALL EXOTHERMIC WELD. ERICO TYPE GT.
8. CONTRACTOR TO PROVIDE AND INSTALL NEW 57,400 CIRCULAR MIL BARE COPPER CONDUCTOR TO NEW 98,600 CIRCULAR MILS BARE ALUMINUM DOWN CONDUCTOR. REFER ALSO TO DETAIL 2 ON THIS SHEET.
9. CONTRACTOR TO PROVIDE AND INSTALL EXOTHERMIC WELD. ERICO TYPE GJ.
10. FINISHED GRADE.

NOTE: EXOTHERMIC WELD TYPES MAY DIFFER BASED ON APPLICATION.

TRICON ENGINEERING
777 S. Harbour Island Blvd, STE 350, TAMPA, FL 33602
813.227.6190
Certificate of Authorization No. 00031028

No.	REVISIONS	DATE	BY

Kimley»Horn
© 2021 KIMLEY-HORN AND ASSOCIATES, INC.
100 2ND AVENUE SOUTH, SUITE 105-N, ST. PETERSBURG, FL 33701
PHONE: 727-547-3999
WWW.KIMLEY-HORN.COM CA 00000696

KHA PROJECT	148400067
DATE	OCT 2021
SCALE	AS SHOWN
DESIGNED BY	TDT
DRAWN BY	JLH
CHECKED BY	GLW

BAYSHORE YACHT BASIN

LICENSED PROFESSIONAL
TIMOTHY THOMAS, P.E
FL LICENSE NUMBER 47079
DATE:

LIGHTNING PROTECTION DETAILS

SHEET NUMBER
E-16

This document, together with the concepts and designs presented herein, as an instrument of service, is intended only for the specific purpose and client for which it was prepared. Reuse of and improper reliance on this document without written authorization and adaptation by Kimley-Horn and Associates, Inc. shall be without liability to Kimley-Horn and Associates, Inc.

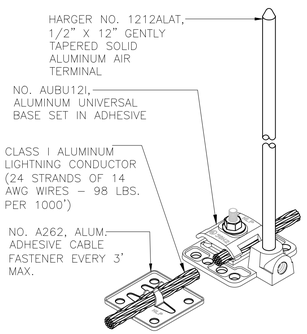

TYPICAL AIR TERMINAL INSTALLATION DETAIL

1 (E-4 | E-17)

SCALE : N.T.S.

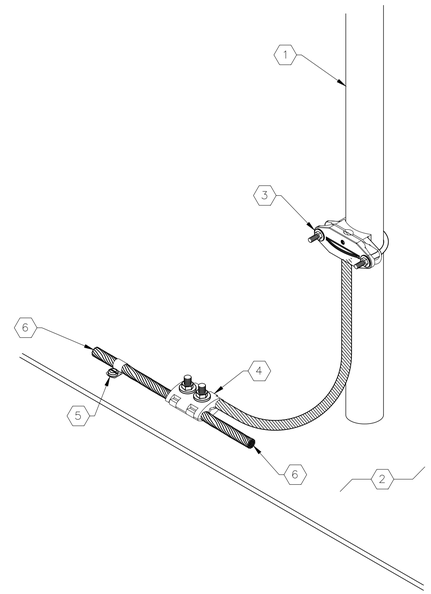

TYPICAL ELECTRICAL RACK BONDING DETAIL

2 (E-4 | E-17)

SCALE : N.T.S.

HANDRAIL BONDING KEYED NOTES:

1. PROPOSED ELECTRICAL RACK POST.
2. TOP OF ELEVATED PLATFORM SLAB.
3. CONTRACTOR TO PROVIDE AND INSTALL ALUMINUM U-BOLT BONDING CLAMP.
4. CONTRACTOR TO PROVIDE AND INSTALL ALUMINUM CABLE SPLICER. THOMPSON LIGHTNING PROTECTION (TLP) A423 OR APPROVED EQUAL.
5. CONTRACTOR TO PROVIDE AND INSTALL ALUMINUM LOOP CABLE HOLDER. THOMPSON LIGHTNING PROTECTION (TLP) A165 OR APPROVED EQUAL. LIGHTNING PROTECTION CONDUCTOR SHALL BE FASTENED EVERY 3'-0" MINIMUM.
6. MAIN LIGHTNING PROTECTION CONDUCTOR TO CONTINUE.
7. EDGE OF ELEVATED PLATFORM SLAB.

NOTE: PROPOSED HANDRAIL TO BE INSTALLED ON TOP OF ELEVATED PLATFORM NOT SHOWN FOR CLARITY.

LIGHTNING PROTECTION GENERAL NOTES:

1. CONTRACTOR SHALL SUBMIT SHOP DRAWINGS FOR APPROVAL PRIOR TO PURCHASING EQUIPMENT OR COMMENCING CONSTRUCTION.
2. LOCATE AIR TERMINALS AS SHOWN. TAKE CARE TO INSURE THAT ALL POINTS ARE WITHIN 2'-0" OF OUTSIDE BUILDING EDGE, OUTSIDE CORNERS, AND RIDGE ENDS, AND THAT MAXIMUM SPACING DOES NOT EXCEED 20'-0", AND THAT MINIMUM PROJECTION ABOVE OBJECT PROTECTED IS 18".
3. MAINTAIN HORIZONTAL OR DOWNWARD COURSING OF MAIN CONDUCTOR AND INSURE THAT ALL BENDS HAVE AT LEAST AN 8" RADIUS AND DO NOT EXCEED 90°.
4. ALL LIGHTNING PROTECTION COMPONENTS SHALL BE ALUMINUM EXCEPT FOR BELOW GRADE INSTALLATIONS.
5. ATTACH ALL EXPOSED ROOF, DOWN LEAD AND BONDING CABLES AT 3'-0" ON CENTER MAXIMUM.
6. INTERCONNECT LIGHTNING PROTECTION GROUND TO ELECTRIC, TELEPHONE, AND OTHER BUILDING GROUND SYSTEMS AS SHOWN OR AS REQUIRED BY CODE.
7. ALL MATERIALS ARE UNDERWRITERS LABORATORIES APPROVED WITH LABELS ON CONDUCTORS AT 10'-0" INTERVALS AND LABELS ON ALL AIR TERMINALS.
8. ALL NEW LIGHTNING PROTECTION SYSTEMS SHALL MEET THE REQUIREMENTS OF NFPA 780 AND AFTER INSTALLATION THE CONTRACTOR SHALL SUBMIT A CERTIFICATION APPLICATION TO UNDERWRITERS LABORATORIES (U.L.) FOR INSPECTION AND THE ISSUANCE OF A U.L. MASTER LABEL.
9. ALL MATERIALS SHOWN AND INTENDED FOR USE ARE TO BE AS MANUFACTURED BY THOMPSON LIGHTNING PROTECTION INC., ERICO OR HARGER WILLL BE CONSIDERED EQUAL.
10. INSTALLATION SHALL COMPLY IN ALL RESPECTS TO L.P.I. CODE 175, U.L. 96A, NFPA 70 AND NFPA 780.
11. ALL NEW LIGHTNING PROTECTION SYSTEMS SHALL MEET THE REQUIREMENTS OF NFPA 780 AND AFTER INSTALLATION THE CONTRACTOR SHALL SUBMIT A CERTIFICATION APPLICATION TO UNDERWRITERS LABORATORIES (U.L.) FOR INSPECTION AND THE ISSUANCE OF A U.L. MASTER LABEL. THE LOCATION AND QUANTITY OF AIR TERMINALS MAY DEVIATE FROM THE CONTRACT DOCUMENTS IF THE FINAL SYSTEM DESIGN CONFORMS TO THE STANDARDS IN THESE SPECIFICATIONS. HOWEVER, OTHER METHODS, MATERIALS AND MEANS SHALL NOT DEVIATE FROM THE STANDARDS ADOPTED BY THE HILLSBOROUGH COUNTY PUBLIC UTILITIES DEPARTMENT. THE HILLSBOROUGH COUNTY STANDARDS INCLUDE :
    A. HANDHOLES ARE TO BE PROVIDED WHERE ANY BUILDING DOWN CONDUCTOR IS ATTACHED TO A GROUND ROD.
    B. HANDHOLES ARE TO BE PROVIDED WHERE ANY GROUNDING ELECTRODE CONDUCTOR IS ATTACHED TO A GROUND ROD.
    C. HANDHOLES ARE TO BE PROVIDED WHERE ANY TWO UNDERGROUND CONDUCTORS ARE ATTACHED.
    D. ALL CONNECTIONS BETWEEN CONDUCTORS, OR WHERE CONDUCTORS ATTACH TO GROUND RODS, SHALL BE VIA EXOTHERMIC WELDS. NO MECHANICAL BONDING CLAMPS WILL BE PERMITTED.
    E. ALL NEW COMPONENTS SHALL BE OF A SIMILAR MATERIAL (ALUMINUM). IN INSTANCES WHERE EXISTING COMPONENTS ARE CONSTRUCTED FROM A MATERIAL OTHER THAN ALUMINUM, METHODS FOR CONNECTING DISSIMILAR METALS WILL BE EMPLOYED.
    F. EVEN WHERE ALLOWED BY N.F.P.A. 780, STRUCTURAL COMPONENTS, SUCH AS HANDRAILS, STANCHIONS, OR LIGHT POLES SHALL NOT BE USED AS CONDUCTORS FOR THE LIGHTNING PROTECTION SYSTEM. ALL CONNECTIONS BETWEEN AIR TERMINALS OR ANY OTHER LIGHTNING SYSTEM COMPONENTS SHALL BE VIA BRAIDED ALUMINUM CONDUCTORS.
    G. AFTER INSTALLATION, THE CONTRACTOR SHALL MEASURE THE GROUND RESISTANCE OF ANY NEW LIGHTNING PROTECTION SYSTEM GROUND ROD. THE MEASURED RESISTANCE SHALL NOT EXCEED MAXIMUM ALLOWED LIGHTNING GROUND ROD RESISTANCE PER NFPA 780 OF 25.0 OHMS.
    H. BENDS IN CONDUCTORS SHALL BE GRADUAL WITH A RADIUS OF 8-INCHES OR GREATER, FORMING AN ANGLE OF AT LEAST 90 DEGREES.
    I. INTERCONNECTION OF METALS.
        a. ALL METAL BODIES WITHIN 6-FEET OF THE CONDUCTOR SHALL BE BONDED TO THE SYSTEM WITH APPROVED FITTINGS AND CONDUCTOR.
        b. BONDING OF ALL METALLIC OBJECTS AND SYSTEMS AT ROOF LEVELS AND ELSEWHERE ON THE STRUCTURE SHALL BE COMPLETE. PRIMARY BONDS FOR METAL BODIES OF CONDUCTANCE SHALL BE BONDED WITH APPROPRIATE FITTINGS AND FULL-SIZE CONDUCTOR; AND SHALL CONSIST OF AT LEAST THE FOLLOWING; ROOF EXHAUST FANS, METALLIC EXHAUST VENTS, METALLIC ACCESS HATCH AND ANY HANDRAILS, LADDERS OR SAFETY CAGES.
        c. METAL BODIES OF INDUCTANCE LOCATED WITHIN 6-FEET OF A CONDUCTOR OR OBJECT WITH SECONDARY BONDS SHALL BE BONDED WITH SECONDARY CABLE AND FITTINGS. TYPICAL OF THESE ARE; STEEL SUPPORTS FOR ANCILLARY EQUIPMENT, VENTS, PIPING AND ANY OTHER SIZEABLE MISCELLANEOUS METALS, ETC.
12. HANDRAILS SHALL BE BONDED TO LIGHTNING PROTECTION CONDUCTOR AT A MAXIMUM OF 40'-0" INTERVALS.

TRICON ENGINEERING
777 S. Harbour Island Blvd, STE 350, TAMPA, FL 33602
813.227.9190
Certificate of Authorization No. 00031028

No.	REVISIONS	DATE	BY

Kimley»Horn
© 2021 KIMLEY-HORN AND ASSOCIATES, INC.
100 2ND AVENUE SOUTH, SUITE 105-N, ST. PETERSBURG, FL 33701
PHONE: 727-547-3999
WWW.KIMLEY-HORN.COM CA 00000696

KHA PROJECT	148400067
DATE	OCT 2021
SCALE	AS SHOWN
DESIGNED BY	TDT
DRAWN BY	JLH
CHECKED BY	GLW

BAYSHORE YACHT BASIN

LICENSED PROFESSIONAL
TIMOTHY THOMAS, P.E
FL LICENSE NUMBER 47079
DATE:

LIGHTNING PROTECTION DETAILS AND NOTES

SHEET NUMBER
E-17

This document, together with the concepts and designs presented herein, as an instrument of service, is intended only for the specific purpose and client for which it was prepared. Reuse of and improper reliance on this document without written authorization and adaptation by Kimley-Horn and Associates, Inc. shall be without liability to Kimley-Horn and Associates, Inc.

CONDUIT AND CABLE SCHEDULE

CONDUIT No.	QTY/SIZE	NUMER OF CONDUCTORS/SIZE	FROM	TO	REMARKS
P000	1"	COORDINATE WITH FPL	EXISTING FPL TRANSFORMER	NEW FPL CT METER	COORDINATE ALL REQUIREMENTS WITH FPL.
P001A	3"	3-#350 + 1-#250 N	DUKE ENERGY TRANSFORMER	MOTOR CONTROL CENTER MAIN CIRCUIT BREAKER	
P001B	3"	3-#350 + 1-#250 N	DUKE ENERGY TRANSFORMER	MOTOR CONTROL CENTER MAIN CIRCUIT BREAKER	
P002A	3"	3-#350 + 1-#250 N + 1-#1 GND	MOTOR CONTROL CENTER ATS	GENERATOR DOCKING STATION	
P002B	3"	3-#350 + 1-#250 N + 1-#1 GND	MOTOR CONTROL CENTER ATS	GENERATOR DOCKING STATION	
P003A	3"	3-#350 + 1-#250 N + 1-#1 GND	GENERATOR DOCKING STATION	400KW GENERATOR	
P003B	3"	3-#350 + 1-#250 N + 1-#1 GND	GENERATOR DOCKING STATION	400KW GENERATOR	
P100	2"	3-2/0 + 1-#6 GND	MOTOR CONTROL CENTER	NEW PUMP #1 VFD	
P101	2"	3-2/0 + 1-#6 GND	NEW PUMP #1 VFD	NEW PUMP #1 VFD DISCONNECT	
P102	2"	3-2/0 + 1-#6 GND	NEW PUMP #1 VFD DISCONNECT	NEW PUMP #1 VFD WET WELL JUNCTION BOX	
P103	3"	AS REQUIRED	NEW PUMP #1 VFD WET WELL JUNCTION BOX	NEW PUMP #1 MOTOR	CABLE TO BE SUPPLIED INTEGRAL TO THE PUMP MOTOR BY MANUFACTURER.
P200	2"	3-2/0 + 1-#6 GND	MOTOR CONTROL CENTER	NEW PUMP #2 VFD	
P201	2"	3-2/0 + 1-#6 GND	NEW PUMP #2 VFD	NEW PUMP #2 VFD DISCONNECT	
P202	2"	3-2/0 + 1-#6 GND	NEW PUMP #2 VFD DISCONNECT	NEW PUMP #2 VFD WET WELL JUNCTION BOX	
P203	3"	AS REQUIRED	NEW PUMP #2 VFD WET WELL JUNCTION BOX	NEW PUMP #2 MOTOR	CABLE TO BE SUPPLIED INTEGRAL TO THE PUMP MOTOR BY MANUFACTURER.
P300	2"	3-2/0 + 1-#6 GND	MOTOR CONTROL CENTER	NEW PUMP #3 VFD	
P301	2"	3-2/0 + 1-#6 GND + 4-#12	NEW PUMP #3 VFD	NEW PUMP #3 VFD DISCONNECT	
P302	2"	3-2/0 + 1-#6 GND	NEW PUMP #3 VFD DISCONNECT	NEW PUMP #3 VFD WET WELL JUNCTION BOX	
P303	3"	AS REQUIRED	NEW PUMP #3 VFD WET WELL JUNCTION BOX	NEW PUMP #3 MOTOR	CABLE TO BE SUPPLIED INTEGRAL TO THE PUMP MOTOR BY MANUFACTURER.
P400	1-1/2"	3-#8 + 1-#10 GND	MOTOR CONTROL CENTER	GENERATOR DISCONNECT	POWER FOR GENERATOR ACCESSORIES.
P500	1"	2-#8 + 1-#10 GND	MOTOR CONTROL CENTER	HVAC UNIT DISCONNECT	
P501	1"	2-#8 + 1-#10 GND	HVAC UNIT DISCONNECT	HVAC UNIT	PROVIDE WEATHERPROOF NON-METALLIC CONNECTION TO HVAC UNIT.
P600	1"	3-#10 + 1-#10 GND	MOTOR CONTROL CENTER	ODOR CONTROL DISCONNECT	
P601	1"	3-#10 + 1-#10 GND	ODOR CONTROL DISCONNECT	ODOR CONTROL UNIT	PROVIDE WEATHERPROOF NON-METALLIC CONNECTION TO ODOR CONTROL UNIT.
P700	1"	3-#10 + 1-#10 GND	MOTOR CONTROL CENTER	CRANE DISCONNECT	
P701	1"	3-#10 + 1-#10 GND	CRANE DISCONNECT	CRANE	PROVIDE WEATHERPROOF NON-METALLIC CONNECTION TO CRANE.
P800	1"	2-#12 + 1-#12 GND	PANELBOARD 'LP'	AREA LIGHT C1	AREA LIGHT C1 120V POWER
P801	1"	2-#12 + 1-#12 GND	AREA LIGHT C1	3-WAY SWITCH AT WET WELL JB RACK	AREA LIGHT C1 CONTROLS
P802	1"	3-#12 + 1-#12 GND	3-WAY SWITCH AT WET WELL JB RACK	3-WAY SWITCH AT GATE	AREA LIGHT C1 CONTROLS
P900	1"	2-#12 + 1-#12 GND	LIGHT SWITCH	AREA LIGHT C2	AREA LIGHT C2 120V POWER

TRICON ENGINEERING
777 S. Harbour Island Blvd, STE 350, TAMPA, FL 33602
813.227.6190
Certificate of Authorization No. 00031028

No.	REVISIONS	DATE	BY

Kimley»Horn
© 2021 KIMLEY-HORN AND ASSOCIATES, INC.
100 2ND AVENUE SOUTH, SUITE 105-N, ST. PETERSBURG, FL 33701
PHONE: 727-547-3999
WWW.KIMLEY-HORN.COM CA 00000696

KHA PROJECT 148400067
DATE OCT 2021
SCALE AS SHOWN
DESIGNED BY TDT
DRAWN BY JLH
CHECKED BY GLW

BAYSHORE YACHT BASIN

LICENSED PROFESSIONAL
TIMOTHY THOMAS, P.E
FL LICENSE NUMBER 47079
DATE:

CONDUIT AND CABLE SCHEDULE

SHEET NUMBER
E-18

This document, together with the concepts and designs presented herein, as an instrument of service, is intended only for the specific purpose and client for which it was prepared. Reuse of and improper reliance on this document without written authorization and adaptation by Kimley-Horn and Associates, Inc. shall be without liability to Kimley-Horn and Associates, Inc.

CONDUIT AND CABLE SCHEDULE

CONDUIT No.	QTY/SIZE	NUMER OF CONDUCTORS/SIZE	FROM	TO	REMARKS
C1	1"	2/C-#16 SHIELDED (BELDEN 8719)	FLOW METER TRANSMITTER	DFS TCU/VFD CONTROL PANEL	FOR NEW FLOW METER 4-20mA SIGNAL.
C2	1"	CABLES BY MANUFACTURER	FLOW METER SENSOR	FLOW METER TRANSMITTER	VERIFY SIG1 AND SIG2 CAN BE COMBINED IN 1 CONDUIT WITH MANUFACTURER. COORDINATE CABLE CONNECTIONS WITH MANUFACTURER. SIG1 & SIG2 ARE NOT TO BE SPLICED.
C3	1"	12-#14 & 1-#14 GND	DFS TCU/VFD CONTROL PANEL	INSTRUMENTATION JB AT WET WELL	FLOAT SWITCH CONDUCTORS. COUNT INCLUDES SPARES.
C4	2"	CABLE BY MANUFACTURER	INSTRUMENTATION JB AT WET WELL	FLOATS IN WET WELL	FLOAT SWITCHES TO EACH BE PROVIDED WITH INTEGRAL CABLE.
C100	1"	14-#14 + 1-#14 GND	VFD #1	DFS TCU/VFD CONTROL PANEL	PUMP/VFD INPUT/OUTPUTS TO DFS TCU/VFD CONTROL PANEL. COUNT INCLUDES SPARES.
C101	1-1/2"	2: 2/C-#16 SHIELDED (BELDEN 8719)	VFD #1	DFS TCU/VFD CONTROL PANEL	VFD 4-20mA SPEED COMMAND AND 4-20mA SPEED REFERENCE SIGNALS.
C200	1"	14-#14 + 1-#14 GND	VFD #2	DFS TCU/VFD CONTROL PANEL	PUMP/VFD INPUT/OUTPUTS TO DFS TCU/VFD CONTROL PANEL. COUNT INCLUDES SPARES.
C201	1-1/2"	2: 2/C-#16 SHIELDED (BELDEN 8719)	VFD #2	DFS TCU/VFD CONTROL PANEL	VFD 4-20mA SPEED COMMAND AND 4-20mA SPEED REFERENCE SIGNALS.
C300	1"	14-#14 + 1-#14 GND	VFD #3	DFS TCU/VFD CONTROL PANEL	PUMP/VFD INPUT/OUTPUTS TO DFS TCU/VFD CONTROL PANEL. COUNT INCLUDES SPARES.
C301	1-1/2"	2: 2/C-#16 SHIELDED (BELDEN 8719)	VFD #3	DFS TCU/VFD CONTROL PANEL	VFD 4-20mA SPEED COMMAND AND 4-20mA SPEED REFERENCE SIGNALS.
C400	1"	12-#12 + 1-#12 GND	GENERATOR	DFS TCU/VFD CONTROL PANEL	GENERATOR MONITORING CONDUCTORS. COUNT INCLUDES SPARES.
C401	1"	4-#12 + 1-#12 GND	GENERATOR	AUTOMATIC TRANSFER SWITCH	GENERATOR START CIRCUIT. COUNT INCLUDES SPARES.
C402	1"	10-#12 + 1-#12 GND	GENERATOR DIESEL TANK	DFS TCU/VFD CONTROL PANEL	GENERATOR DIESEL TANK MONITORING CONDUCTORS. COUNT INCLUDES SPARES.
C403	1"	2/C-#16 SHIELDED (BELDEN 8719)	GENERATOR DIESEL TANK	DFS TCU/VFD CONTROL PANEL	GENERATOR DIESEL TANK LEVEL TRANSMITTER.
C404	1"	2-#12 + 1-#12 GND	GENERATOR	GENERATOR SHUTOFF PUSHBUTTON	EMERGENCY SHUTOFF CIRCUIT.
C405	1"	12-#12 + 1-#12 GND	AUTOMATIC TRANSFER SWITCH	DFS TCU/VFD CONTROL PANEL	ATS MONITORING CONDUCTORS. COUNT INCLUDES SPARES.
C500	1"	2-#12 + 1-#12 GND	MOTOR CONTROL CENTER	DFS TCU/VFD CONTROL PANEL	PHASE MONITOR RELAY CONDUCTORS.
C600	1"	4-#12 + 1-#12 GND	PUMP #1 WET WELL JUNCTION BOX	VFD #1	PUMP #1 LEAK AND TEMP SENSOR CONDUCTORS.
C601	1"	4-#12 + 1-#12 GND	PUMP #2 WET WELL JUNCTION BOX	VFD #2	PUMP #2 LEAK AND TEMP SENSOR CONDUCTORS.
C602	1"	4-#12 + 1-#12 GND	PUMP #3 WET WELL JUNCTION BOX	VFD #3	PUMP #3 LEAK AND TEMP SENSOR CONDUCTORS.

TRICON ENGINEERING
777 S. Harbour Island Blvd, STE 350, TAMPA, FL 33602
813.227.6190
Certificate of Authorization No. 00031028

No.	REVISIONS	DATE	BY

Kimley»Horn
© 2021 KIMLEY-HORN AND ASSOCIATES, INC.
100 2ND AVENUE SOUTH, SUITE 105-N, ST. PETERSBURG, FL 33701
PHONE: 727-547-3999
WWW.KIMLEY-HORN.COM CA 00000696

KHA PROJECT 148400067
DATE OCT 2021
SCALE AS SHOWN
DESIGNED BY TDT
DRAWN BY JLH
CHECKED BY GLW

BAYSHORE YACHT BASIN

LICENSED PROFESSIONAL
TIMOTHY THOMAS, P.E
FL LICENSE NUMBER 47079
DATE:

CONDUIT AND CABLE SCHEDULE

SHEET NUMBER
E-19

This document, together with the concepts and designs presented herein, as an instrument of service, is intended only for the specific purpose and client for which it was prepared. Reuse of and improper reliance on this document without written authorization and adaptation by Kimley-Horn and Associates, Inc. shall be without liability to Kimley-Horn and Associates, Inc.

FUNCTION SYMBOL SCHEDULE

IDENTIFICATION LETTERS

	FIRST LETTER		SUCCEEDING LETTERS		
	MEASURED OR INITIATING VARIABLE	MODIFIER	READOUT OR PASSIVE FUNCTION	OUTPUT FUNCTION	MODIFIER
A	ANALYSIS		ALARM		
B	BURNER, COMBUSTION		PROGRAMMER		
C	CONDUCTIVITY			CONTROL	CLOSED
D	DENSITY	DIFFERENTIAL			
E	VOLTAGE		SENSOR (PRIMARY ELEMENT)		
F	FLOW RATE	RATIO (FRACTION)			
G	GAGING		GLASS VIEWING DEVICE		
H	HAND				HIGH
I	CURRENT (ELECTRICAL)		INDICATE		
J	POWER	SCAN			
K	TIME, TIME SCHEDULE	TIME RATE OF CHANGE		CONTROL STATION	
L	LEVEL		LIGHT (PILOT)		LOW
M	MOTOR	MOMENTARY			MIDDLE, INTERMEDIATE
N	VIBRATION		IGNITOR	ISOLATOR	
O	OPERATION	OFFSET	ORIFICE, RESTRICTION		OPEN
P	PRESSURE, VACUUM		POINT (TEST) CONNECTION		
Q	QUANTITY, EVENT	INTEGRATE, TOTALIZE	INTEGRATE		
R	RADIATION		RECORD, PRINT		
S	SPEED, FREQUENCY	SAFETY		SWITCH	
T	TEMPERATURE			TRANSMIT	
U	MULTIVARIABLE	TREND	MULTIFUNCTION	MULTIFUNCTION	MULTIFUNCTION
V	VISCOSITY	VACUUM		VALVE, DAMPER, LOUVER, GATE	
W	WEIGHT, FORCE, TORQUE		WELL		
X	UNCLASSIFIED		UNCLASSIFIED	UNCLASSIFIED	UNCLASSIFIED
Y				RELAY, COMPUTE, CONVERT	
Z	POSITION			FINAL CONTROL ELEMENT	UNCLASSIFIED

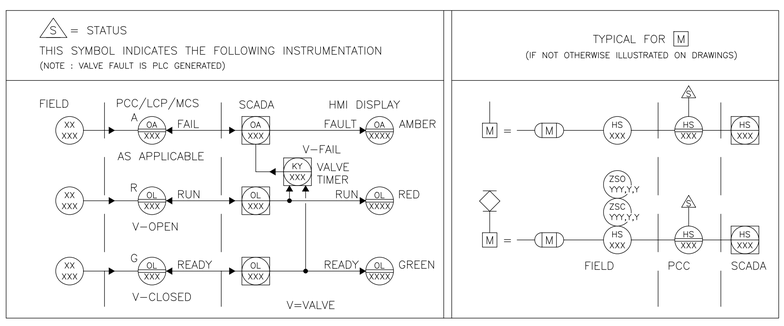

LINE DESIGNATIONS

INSTRUMENTATION SIGNAL
ELECTRICAL POWER
DATA LINK — D — D —
RADIO LINK — R — R —
FIBER OPTIC DATA — F — F —

CONTROLLER NOTATION

PV= PROCESS VARIABLE INPUT
SP= SET POINT INPUT
C= CONTROL OUTPUT

INPUT/OUTPUT NOTATIONS

AI = ANALOG INPUT
AO= ANALOG OUTPUT
DI = DISCRETE INPUT
DO= DISCRETE OUTPUT

HAND SWITCH NOTATION

HOA = HAND-OFF-AUTO
S/S = START/STOP
SEL = SELECTOR
O/C = OPEN/CLOSE
O/O = ON/OFF
LOS = LOCKOUT-START
LOR = LOCAL-OFF-REMOTE
OAC = OPEN-AUTO CLOSE
CAO = CLOSED-AUTO OPEN

MISCELLANEOUS NOTATIONS

S/D = SHUTDOWN
O/R = OVERRIDE
MCS = MASTER CONTROL STATION
VFD = VARIABLE FREQUENCY DRIVE
PCC = PROCESS CONTROL CABINET
LCP = LOCAL CONTROL PANEL
ES = ELECTRICAL SUPPLY (120VAC)

EQUIPMENT NOTATION

B = BLOWER OR FAN
E = ENGINE
G = GENERATOR
F = FILTER
GS = GRINDER/SCREEN
K = COMPRESSOR
H = HOIST
ME = MECHANICAL EQUIPMENT
MX = MIXER
P = PUMP
T = TANK OR SUMP

VALVE DESIGNATIONS

MOV = MOTOR OPERATED VALVE

GENERAL ABBREVIATIONS

SCADA – SUPERVISORY CONTROL AND DATA ACQUISITION.
PLC – PROGRAMMABLE LOGIC CONTROL
SA – SURGE SUPPRESSOR DEVICE

I INTERLOCK

I-3 CONTINUATION OF SIGNAL OR DATA TO/FROM SHEET NUMBER INDICATED

BASIC SYMBOLS

SINGLE FUNCTION		MUTIPLE FUNCTION	
	OR		FIELD MOUNTED INSTRUMENT OR DEVICE
	OR		FRONT OF PANEL MOUNTED INSTRUMENT ON LCP, PCC, MCS, OR VFD
	OR		REAR OF PANEL MOUNTED INSTRUMENT ON LCP, PCC, MCS, OR VFD
	OR		FRONT OF PANEL MOUNTED INSTRUMENT ON MAIN PANEL
	OR		REAR OF PANEL MOUNTED INSTRUMENT ON MAIN PANEL
	OR		PLC AND/OR COMPUTER SOFTWARE COMPONENT (OPERATOR ACCESSIBLE UNDER NORMAL CONDITIONS) OR
	OR		PLC AND/OR COMPUTER GENERATED COMPONENT (NOT OPERATOR ACCESSIBLE UNDER NORMAL CONDITIONS)
RTU	OR	RTU RTU	DATA FLOW SYSTEMS RTU INPUT/OUTPUT

TRICON ENGINEERING
777 S. Harbour Island Blvd, STE 350, TAMPA, FL 33602
813.227.9190
Certificate of Authorization No. 00031028

No.	REVISIONS	DATE	BY

Kimley»Horn
© 2021 KIMLEY-HORN AND ASSOCIATES, INC.
100 2ND AVENUE SOUTH, SUITE 105-N, ST. PETERSBURG, FL 33701
PHONE: 727-547-3999
WWW.KIMLEY-HORN.COM REGISTRY NO. 696

KHA PROJECT 148400067
DATE OCT 2021
SCALE AS SHOWN
DESIGNED BY TDT
DRAWN BY JLT
CHECKED BY GLW

Manatee County Florida

BAYSHORE YACHT BASIN FORCE MAIN AND LIFT STATION REPLACEMENT

LICENSED PROFESSIONAL
TIMOTHY THOMAS, P.E.
47079
DATE:

INSTRUMENTATION LEGEND AND ABBREVIATIONS

SHEET NUMBER
I-1

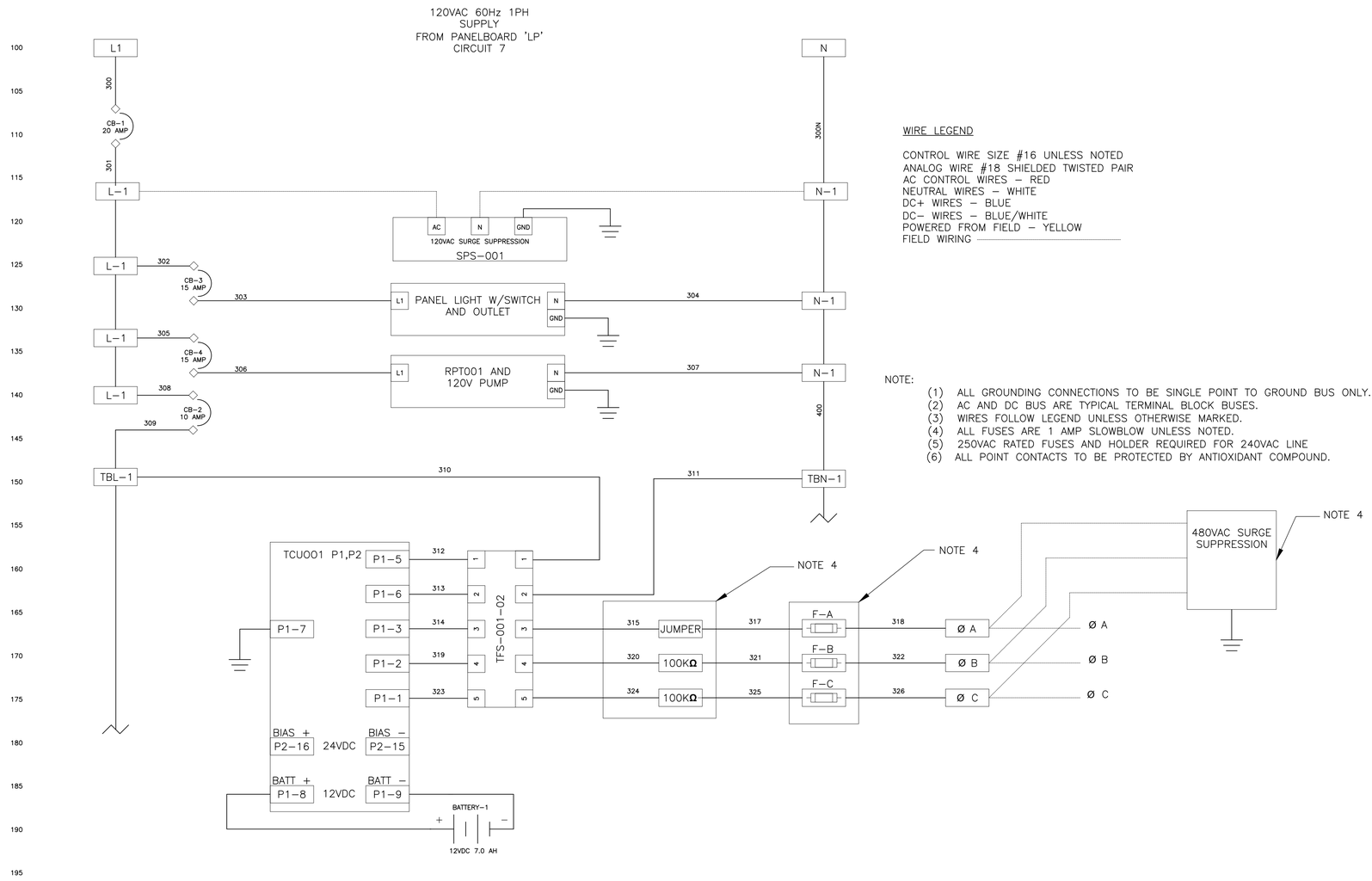

WIRE LEGEND

CONTROL WIRE SIZE #16 UNLESS NOTED
ANALOG WIRE #18 SHIELDED TWISTED PAIR
AC CONTROL WIRES – RED
NEUTRAL WIRES – WHITE
DC+ WIRES – BLUE
DC– WIRES – BLUE/WHITE
POWERED FROM FIELD – YELLOW
FIELD WIRING

NOTE:

(1) ALL GROUNDING CONNECTIONS TO BE SINGLE POINT TO GROUND BUS ONLY.
(2) AC AND DC BUS ARE TYPICAL TERMINAL BLOCK BUSES.
(3) WIRES FOLLOW LEGEND UNLESS OTHERWISE MARKED.
(4) ALL FUSES ARE 1 AMP SLOWBLOW UNLESS NOTED.
(5) 250VAC RATED FUSES AND HOLDER REQUIRED FOR 240VAC LINE
(6) ALL POINT CONTACTS TO BE PROTECTED BY ANTIOXIDANT COMPOUND.

TRICON ENGINEERING
777 S. Harbour Island Blvd, STE 350, TAMPA, FL 33602
813.227.5190
Certificate of Authorization No. 00031028

This document, together with the concepts and designs presented herein, as an instrument of service, is intended only for the specific purpose and client for which it was prepared. Reuse of and improper reliance on this document without written authorization and adaptation by Kimley-Horn and Associates, Inc. shall be without liability to Kimley-Horn and Associates, Inc.

No.	REVISIONS	DATE	BY

Kimley»Horn
© 2021 KIMLEY-HORN AND ASSOCIATES, INC.
100 2ND AVENUE SOUTH, SUITE 105-N, ST. PETERSBURG, FL 33701
PHONE: 727-547-3999
WWW.KIMLEY-HORN.COM REGISTRY NO. 696

KHA PROJECT 148400067
DATE OCT 2021
SCALE AS SHOWN
DESIGNED BY TDT
DRAWN BY JLT
CHECKED BY GLW

Manatee County FLORIDA

BAYSHORE YACHT BASIN FORCE MAIN
AND LIFT STATION REPLACEMENT

LICENSED PROFESSIONAL
TIMOTHY THOMAS, P.E.
47079
DATE:

DATA FLOW SYSTEMS CONTROL PANEL WIRING DIAGRAMS

SHEET NUMBER
I-2

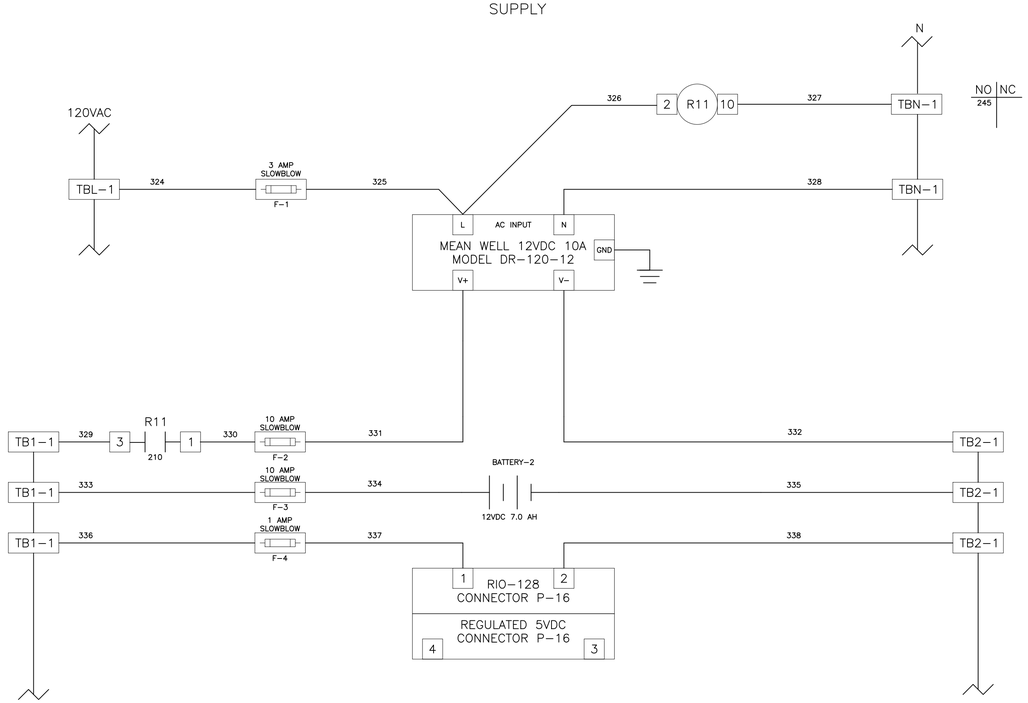

WIRE LEGEND

CONTROL WIRE SIZE #16 UNLESS NOTED
ANALOG WIRE #18 SHIELDED TWISTED PAIR
AC CONTROL WIRES – RED
NEUTRAL WIRES – WHITE
DC+ WIRES – BLUE
DC– WIRES – BLUE/WHITE
POWERED FROM FIELD – YELLOW
FIELD WIRING

NOTE:

(1) ALL GROUNDING CONNECTIONS TO BE SINGLE POINT TO GROUND BUS ONLY.
(2) AC AND DC BUS ARE TYPICAL TERMINAL BLOCK BUSES.
(3) WIRES FOLLOW LEGEND UNLESS OTHERWISE MARKED.
(4) ALL POINT CONTACTS TO BE PROTECTED BY ANTIOXIDANT COMPOUND.

TRICON ENGINEERING
777 S. Harbour Island Blvd, STE 350, TAMPA, FL 33602
813.227.9190
Certificate of Authorization No. 00031028

This document, together with the concepts and designs presented herein, as an instrument of service, is intended only for the specific purpose and client for which it was prepared. Reuse of and improper reliance on this document without written authorization and adaptation by Kimley-Horn and Associates, Inc. shall be without liability to Kimley-Horn and Associates, Inc.

No.	REVISIONS	DATE	BY

Kimley»Horn
© 2021 KIMLEY-HORN AND ASSOCIATES, INC.
100 2ND AVENUE SOUTH, SUITE 105-N, ST. PETERSBURG, FL 33701
PHONE: 727-547-3999
WWW.KIMLEY-HORN.COM REGISTRY NO. 696

KHA PROJECT 148400067
DATE OCT 2021
SCALE AS SHOWN
DESIGNED BY TDT
DRAWN BY JLT
CHECKED BY GLW

Manatee County Florida

BAYSHORE YACHT BASIN FORCE MAIN AND LIFT STATION REPLACEMENT

LICENSED PROFESSIONAL
TIMOTHY THOMAS, P.E.
47079
DATE:

DATA FLOW SYSTEMS
CONTROL PANEL
WIRING DIAGRAMS

SHEET NUMBER
I-3

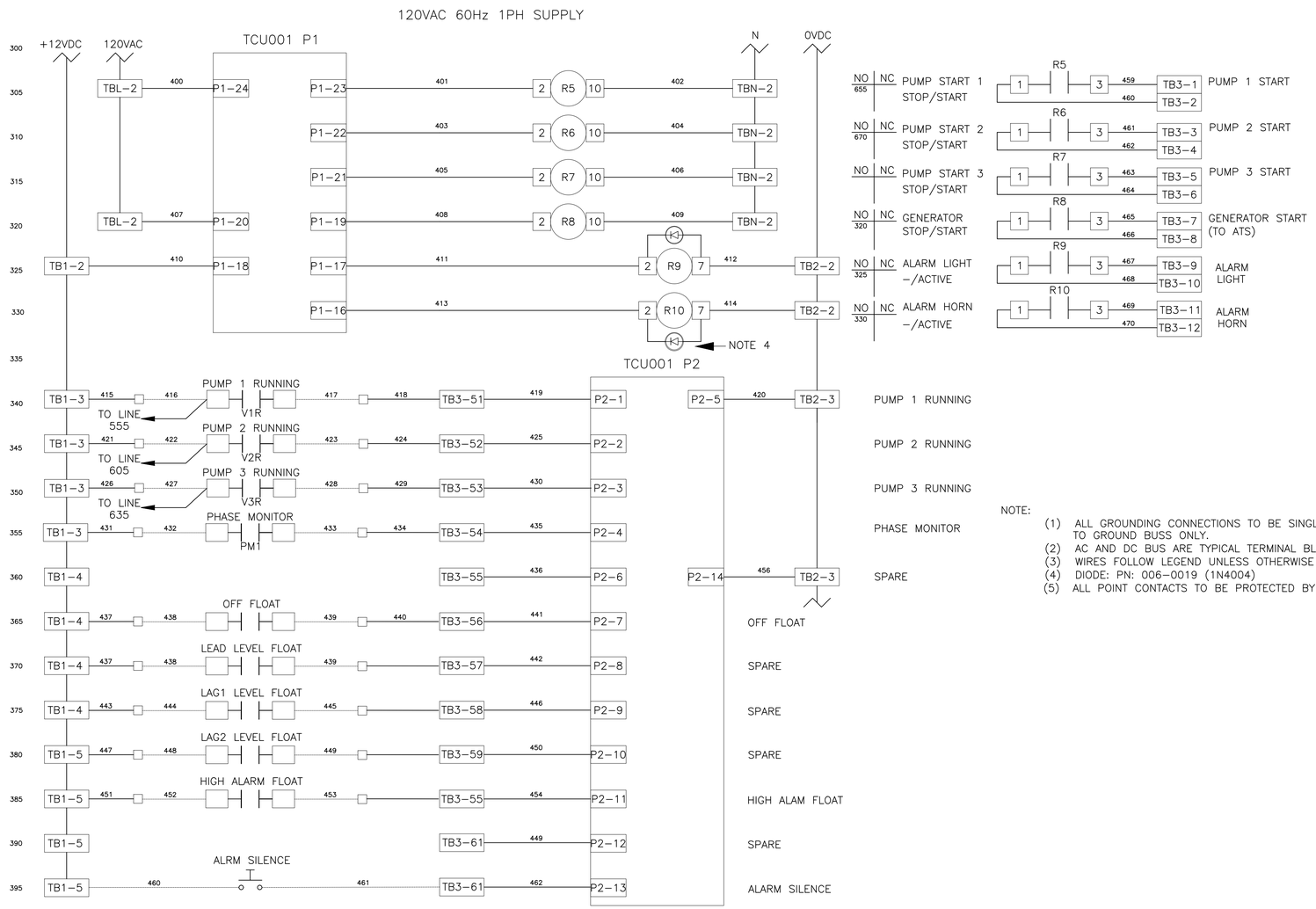

NOTE:

(1) ALL GROUNDING CONNECTIONS TO BE SINGLE POINT TO GROUND BUSS ONLY.
(2) AC AND DC BUS ARE TYPICAL TERMINAL BLOCK BUSSES.
(3) WIRES FOLLOW LEGEND UNLESS OTHERWISE MARKED.
(4) DIODE: PN: 006-0019 (1N4004)
(5) ALL POINT CONTACTS TO BE PROTECTED BY ANTIOXIDANT COMPOUND.

This document, together with the concepts and designs presented herein, as an instrument of service, is intended only for the specific purpose and client for which it was prepared. Reuse of and improper reliance on this document without written authorization and adaptation by Kimley-Horn and Associates, Inc. shall be without liability to Kimley-Horn and Associates, Inc.

TRICON ENGINEERING
777 S. Harbour Island Blvd, STE 350, TAMPA, FL 33602
813.227.5190
Certificate of Authorization No. 00031028

No.	REVISIONS	DATE	BY

Kimley»Horn
© 2021 KIMLEY-HORN AND ASSOCIATES, INC.
100 2ND AVENUE SOUTH, SUITE 105-N, ST. PETERSBURG, FL 33701
PHONE: 727-547-3999
WWW.KIMLEY-HORN.COM REGISTRY NO. 696

KHA PROJECT 148400067
DATE OCT 2021
SCALE AS SHOWN
DESIGNED BY TDT
DRAWN BY JLT
CHECKED BY GLW

Manatee County FLORIDA

BAYSHORE YACHT BASIN FORCE MAIN AND LIFT STATION REPLACEMENT

LICENSED PROFESSIONAL
TIMOTHY THOMAS, P.E.
47079
DATE:

DATA FLOW SYSTEMS CONTROL PANEL WIRING DIAGRAMS

SHEET NUMBER
I-4

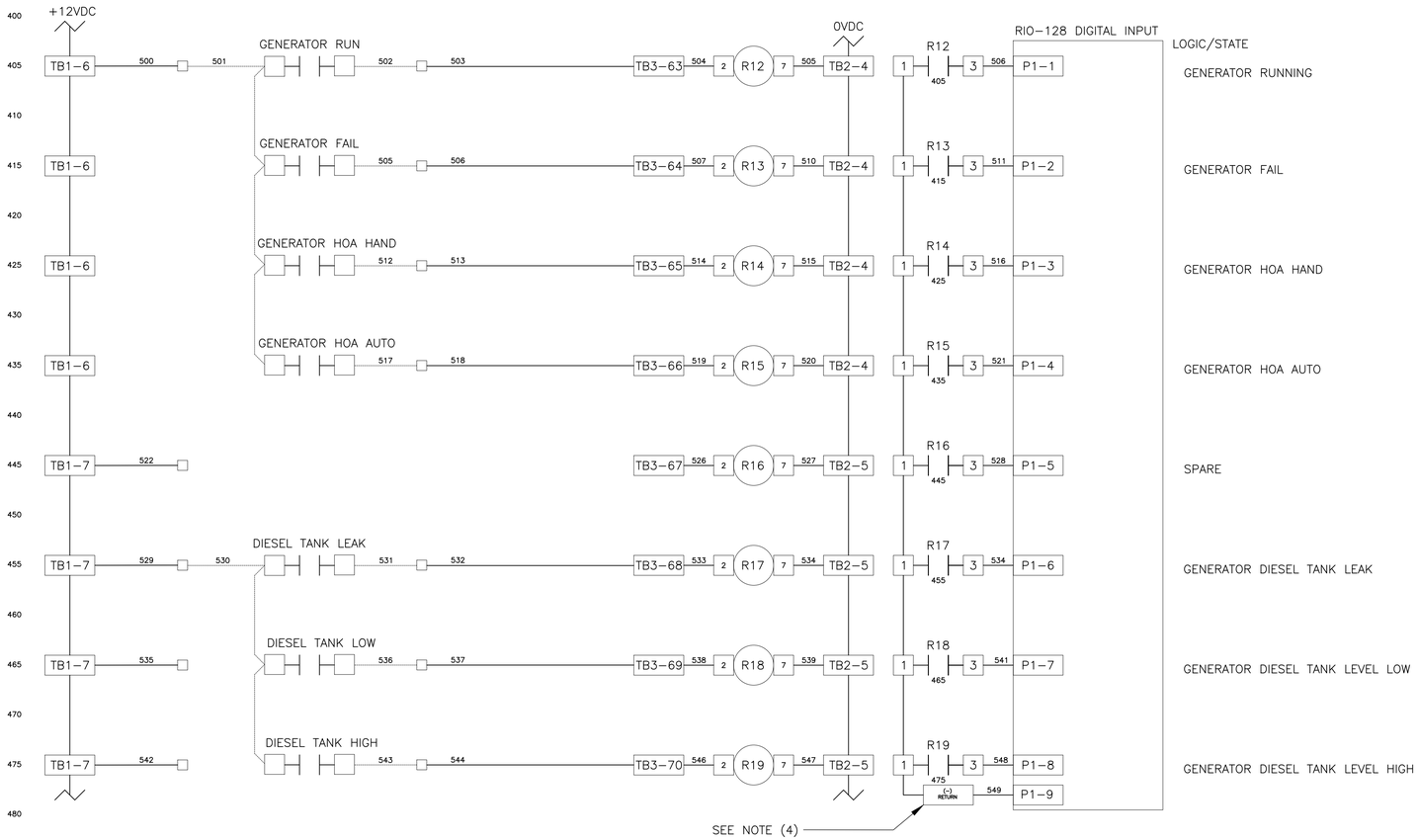

WIRE LEGEND

CONTROL WIRE SIZE #16 UNLESS NOTED
ANALOG WIRE #18 SHIELDED TWISTED PAIR
AC CONTROL WIRES – RED
NEUTRAL WIRES – WHITE
DC+ WIRES – BLUE
DC– WIRES – BLUE/WHITE
POWERED FROM FIELD – YELLOW
FIELD WIRING

NOTE:
(1) ALL GROUNDING CONNECTIONS TO BE SINGLE POINT TO GROUND BUS ONLY.
(2) AC AND DC BUS ARE TYPICAL TERMINAL BLOCK BUSES.
(3) WIRES FOLLOW LEGEND UNLESS OTHERWISE MARKED.
(4) TERMINAL BLOCKS ARE FOR THE DC RETURN (–) BUS FOR THE RIO–128 DIGITAL INPUTS.
(5) ALL POINT CONTACTS TO BE PROTECTED BY ANTIOXIDANT COMPOUND.

TRICON ENGINEERING
777 S. Harbour Island Blvd, STE 350, TAMPA, FL 33602
813.227.9190
Certificate of Authorization No. 00031028

This document, together with the concepts and designs presented herein, as an instrument of service, is intended only for the specific purpose and client for which it was prepared. Reuse of and improper reliance on this document without written authorization and adaptation by Kimley-Horn and Associates, Inc. shall be without liability to Kimley-Horn and Associates, Inc.

No.	REVISIONS	DATE	BY

Kimley»Horn
© 2021 KIMLEY–HORN AND ASSOCIATES, INC.
100 2ND AVENUE SOUTH, SUITE 105–N, ST. PETERSBURG, FL 33701
PHONE: 727–547–3999
WWW.KIMLEY–HORN.COM REGISTRY NO. 696

KHA PROJECT 148400067
DATE OCT 2021
SCALE AS SHOWN
DESIGNED BY TDT
DRAWN BY JLT
CHECKED BY GLW

Manatee County

BAYSHORE YACHT BASIN FORCE MAIN AND LIFT STATION REPLACEMENT

LICENSED PROFESSIONAL
TIMOTHY THOMAS, P.E.
47079
DATE:

DATA FLOW SYSTEMS CONTROL PANEL WIRING DIAGRAMS

SHEET NUMBER
I-5

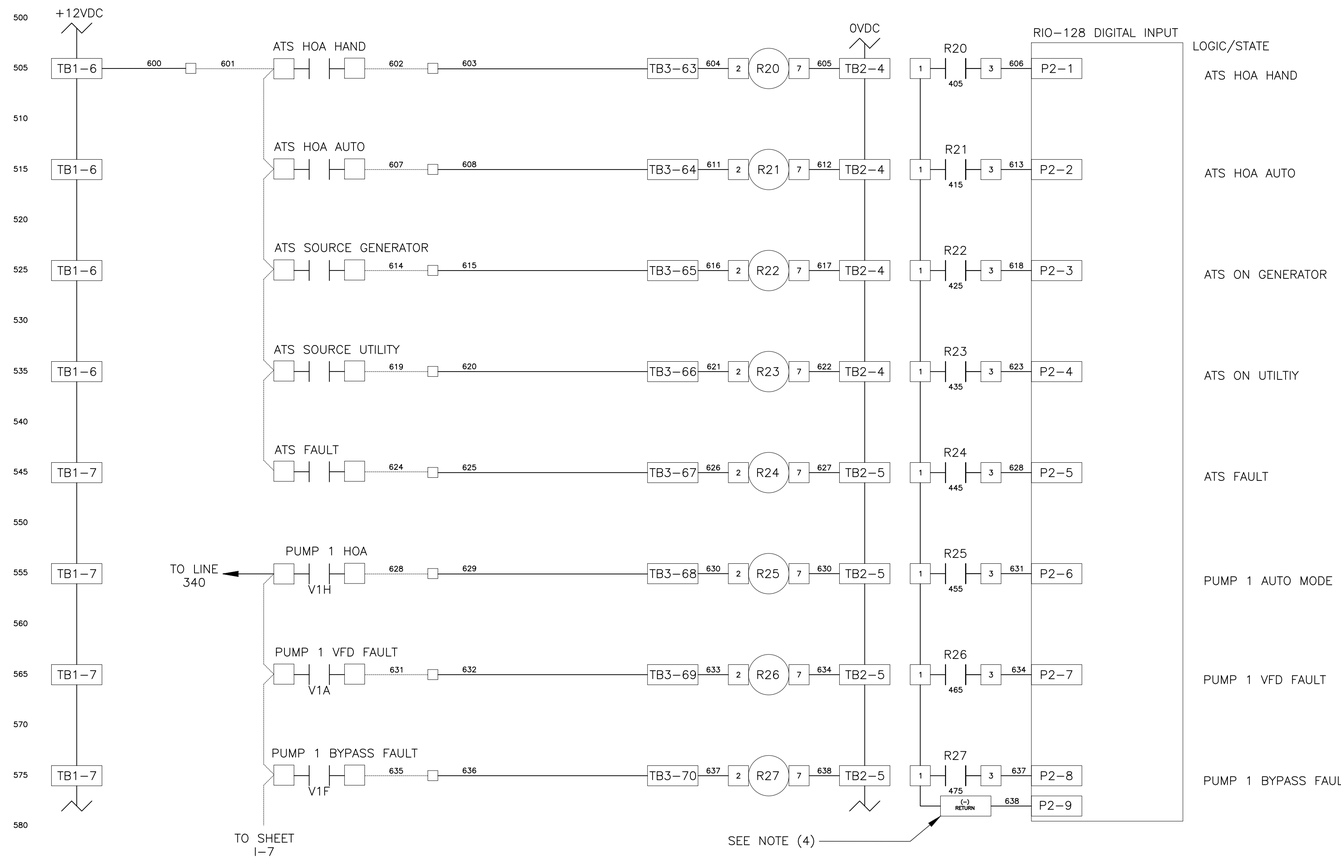

WIRE LEGEND

CONTROL WIRE SIZE #16 UNLESS NOTED
ANALOG WIRE #18 SHIELDED TWISTED PAIR
AC CONTROL WIRES – RED
NEUTRAL WIRES – WHITE
DC+ WIRES – BLUE
DC– WIRES – BLUE/WHITE
POWERED FROM FIELD – YELLOW
FIELD WIRING

NOTE:
(1) ALL GROUNDING CONNECTIONS TO BE SINGLE POINT TO GROUND BUS ONLY.
(2) AC AND DC BUS ARE TYPICAL TERMINAL BLOCK BUSES.
(3) WIRES FOLLOW LEGEND UNLESS OTHERWISE MARKED.
(4) TERMINAL BLOCKS ARE FOR THE DC RETURN (–) BUS FOR THE RIO–128 DIGITAL INPUTS.
(5) ALL POINT CONTACTS TO BE PROTECTED BY ANTIOXIDANT COMPOUND.

TRICON ENGINEERING
777 S. Harbour Island Blvd, STE 350, TAMPA, FL 33602
813.227.9190
Certificate of Authorization No. 00031028

This document, together with the concepts and designs presented herein, as an instrument of service, is intended only for the specific purpose and client for which it was prepared. Reuse of and improper reliance on this document without written authorization and adaptation by Kimley-Horn and Associates, Inc. shall be without liability to Kimley-Horn and Associates, Inc.

No.	REVISIONS	DATE	BY

Kimley»Horn
© 2021 KIMLEY–HORN AND ASSOCIATES, INC.
100 2ND AVENUE SOUTH, SUITE 105–N, ST. PETERSBURG, FL 33701
PHONE: 727–547–3999
WWW.KIMLEY–HORN.COM REGISTRY NO. 696

KHA PROJECT 148400067
DATE OCT 2021
SCALE AS SHOWN
DESIGNED BY TDT
DRAWN BY JLT
CHECKED BY GLW

Manatee County

BAYSHORE YACHT BASIN FORCE MAIN AND LIFT STATION REPLACEMENT

LICENSED PROFESSIONAL
TIMOTHY THOMAS, P.E.
47079
DATE:

DATA FLOW SYSTEMS CONTROL PANEL WIRING DIAGRAMS

SHEET NUMBER
I-6

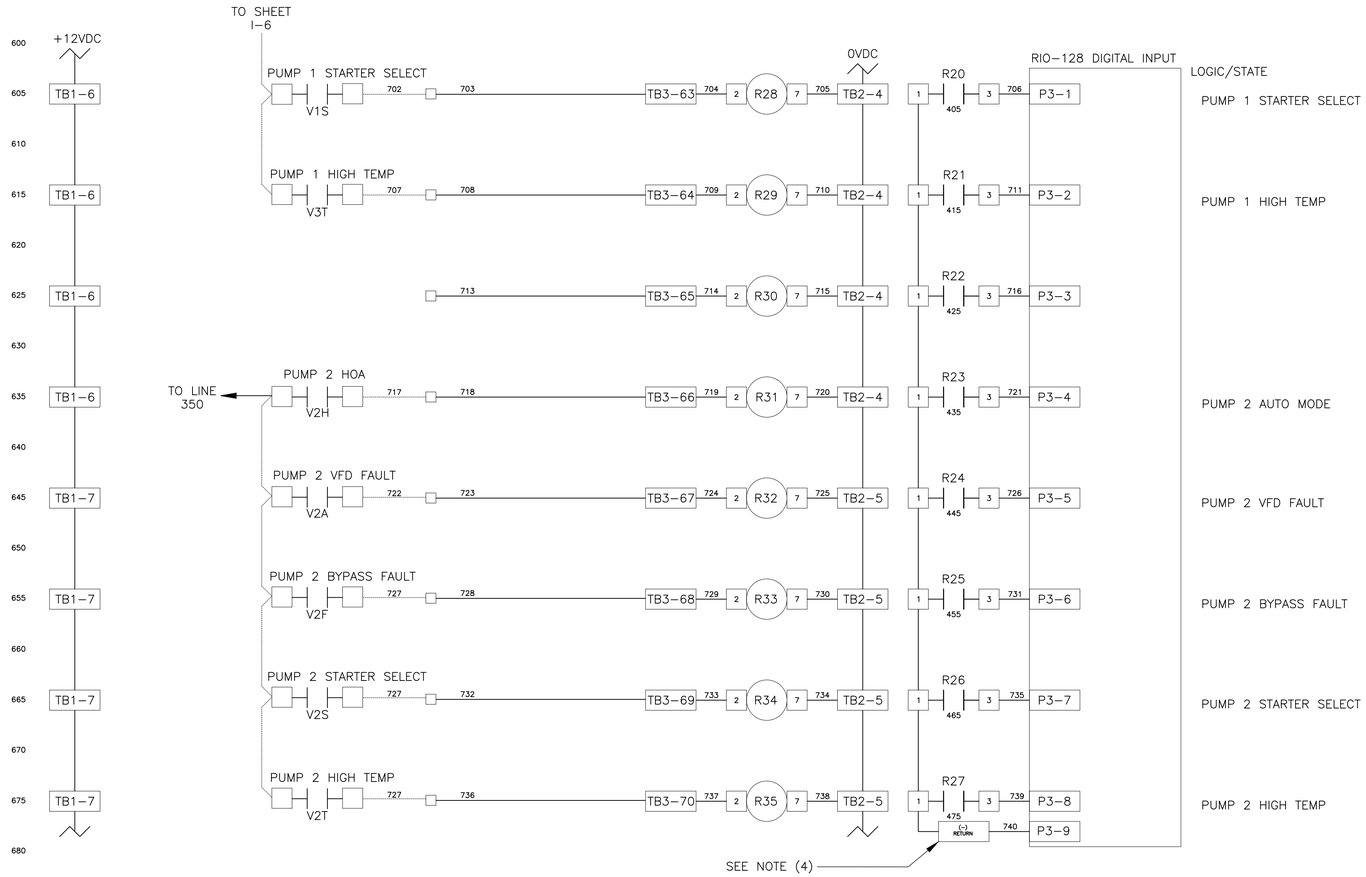

WIRE LEGEND

CONTROL WIRE SIZE #16 UNLESS NOTED
ANALOG WIRE #18 SHIELDED TWISTED PAIR
AC CONTROL WIRES – RED
NEUTRAL WIRES – WHITE
DC+ WIRES – BLUE
DC– WIRES – BLUE/WHITE
POWERED FROM FIELD – YELLOW
FIELD WIRING

NOTE:
(1) ALL GROUNDING CONNECTIONS TO BE SINGLE POINT TO GROUND BUS ONLY.
(2) AC AND DC BUS ARE TYPICAL TERMINAL BLOCK BUSES.
(3) WIRES FOLLOW LEGEND UNLESS OTHERWISE MARKED.
(4) TERMINAL BLOCKS ARE FOR THE DC RETURN (–) BUS FOR THE RIO–128 DIGITAL INPUTS.
(5) ALL POINT CONTACTS TO BE PROTECTED BY ANTIOXIDANT COMPOUND.

TRICON ENGINEERING
777 S. Harbour Island Blvd, STE 350, TAMPA, FL 33602
813.227.9190
Certificate of Authorization No. 00031028

This document, together with the concepts and designs presented herein, as an instrument of service, is intended only for the specific purpose and client for which it was prepared. Reuse of and improper reliance on this document without written authorization and adaptation by Kimley-Horn and Associates, Inc. shall be without liability to Kimley-Horn and Associates, Inc.

No.	REVISIONS	DATE	BY

Kimley»Horn
© 2021 KIMLEY–HORN AND ASSOCIATES, INC.
100 2ND AVENUE SOUTH, SUITE 105–N, ST. PETERSBURG, FL 33701
PHONE: 727–547–3999
WWW.KIMLEY–HORN.COM REGISTRY NO. 696

KHA PROJECT 148400067
DATE OCT 2021
SCALE AS SHOWN
DESIGNED BY TDT
DRAWN BY JLT
CHECKED BY GLW

Manatee County

BAYSHORE YACHT BASIN FORCE MAIN AND LIFT STATION REPLACEMENT

LICENSED PROFESSIONAL
TIMOTHY THOMAS, P.E.
47079
DATE:

DATA FLOW SYSTEMS CONTROL PANEL WIRING DIAGRAMS

SHEET NUMBER
I-7

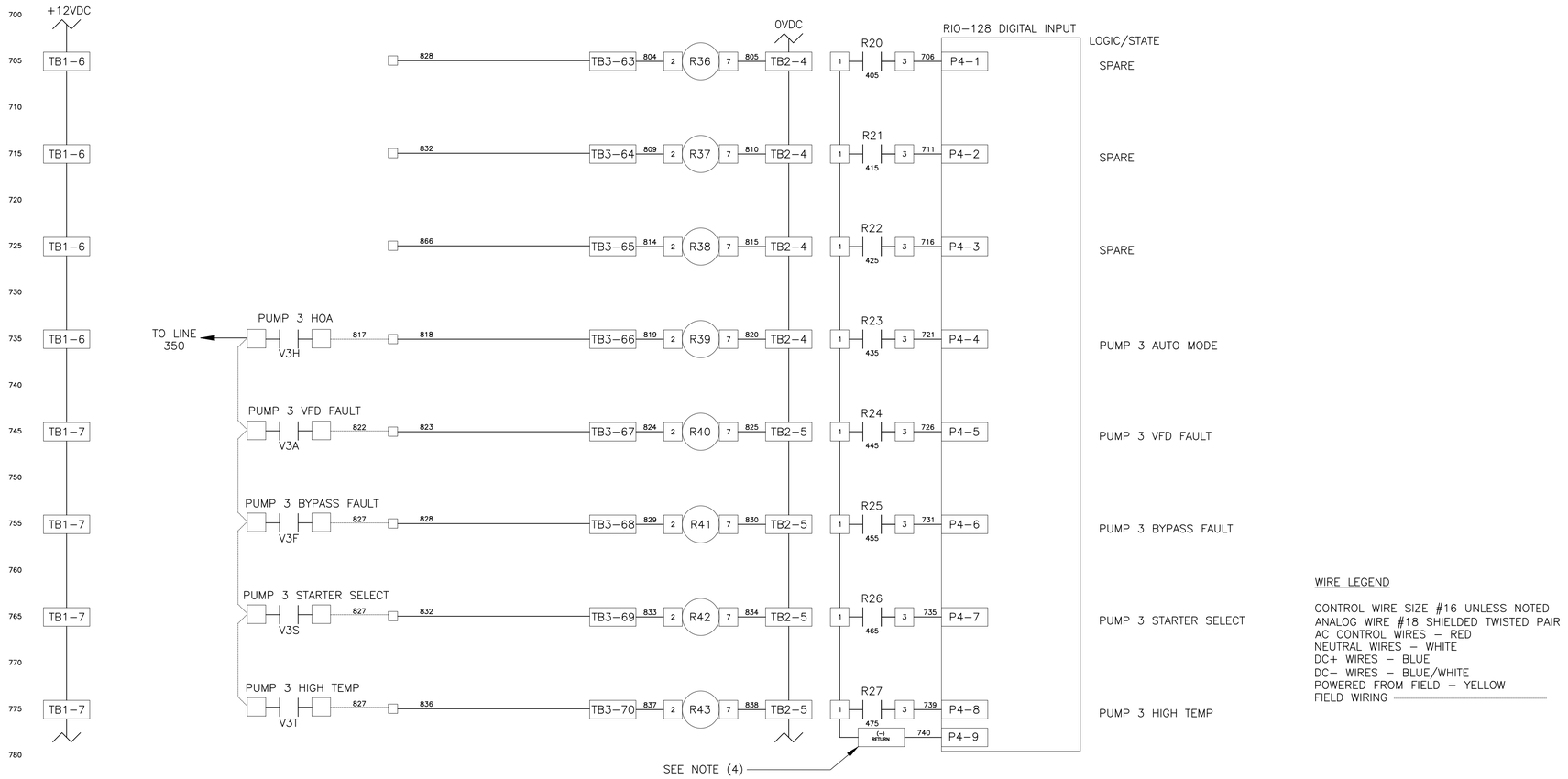

WIRE LEGEND

CONTROL WIRE SIZE #16 UNLESS NOTED
ANALOG WIRE #18 SHIELDED TWISTED PAIR
AC CONTROL WIRES – RED
NEUTRAL WIRES – WHITE
DC+ WIRES – BLUE
DC– WIRES – BLUE/WHITE
POWERED FROM FIELD – YELLOW
FIELD WIRING

NOTE:
(1) ALL GROUNDING CONNECTIONS TO BE SINGLE POINT TO GROUND BUS ONLY.
(2) AC AND DC BUS ARE TYPICAL TERMINAL BLOCK BUSES.
(3) WIRES FOLLOW LEGEND UNLESS OTHERWISE MARKED.
(4) TERMINAL BLOCKS ARE FOR THE DC RETURN (–) BUS FOR THE RIO–128 DIGITAL INPUTS.
(5) ALL POINT CONTACTS TO BE PROTECTED BY ANTIOXIDANT COMPOUND.

TRICON ENGINEERING
777 S. Harbour Island Blvd, STE 350, TAMPA, FL 33602
813.227.9190
Certificate of Authorization No. 00031028

This document, together with the concepts and designs presented herein, as an instrument of service, is intended only for the specific purpose and client for which it was prepared. Reuse of and improper reliance on this document without written authorization and adaptation by Kimley-Horn and Associates, Inc. shall be without liability to Kimley-Horn and Associates, Inc.

No.	REVISIONS	DATE	BY

Kimley»Horn
© 2021 KIMLEY–HORN AND ASSOCIATES, INC.
100 2ND AVENUE SOUTH, SUITE 105–N, ST. PETERSBURG, FL 33701
PHONE: 727–547–3999
WWW.KIMLEY–HORN.COM REGISTRY NO. 696

KHA PROJECT 148400067
DATE OCT 2021
SCALE AS SHOWN
DESIGNED BY TDT
DRAWN BY JLT
CHECKED BY GLW

Manatee County

BAYSHORE YACHT BASIN FORCE MAIN AND LIFT STATION REPLACEMENT

LICENSED PROFESSIONAL
TIMOTHY THOMAS, P.E.
47079
DATE:

DATA FLOW SYSTEMS CONTROL PANEL WIRING DIAGRAMS

SHEET NUMBER
I-8

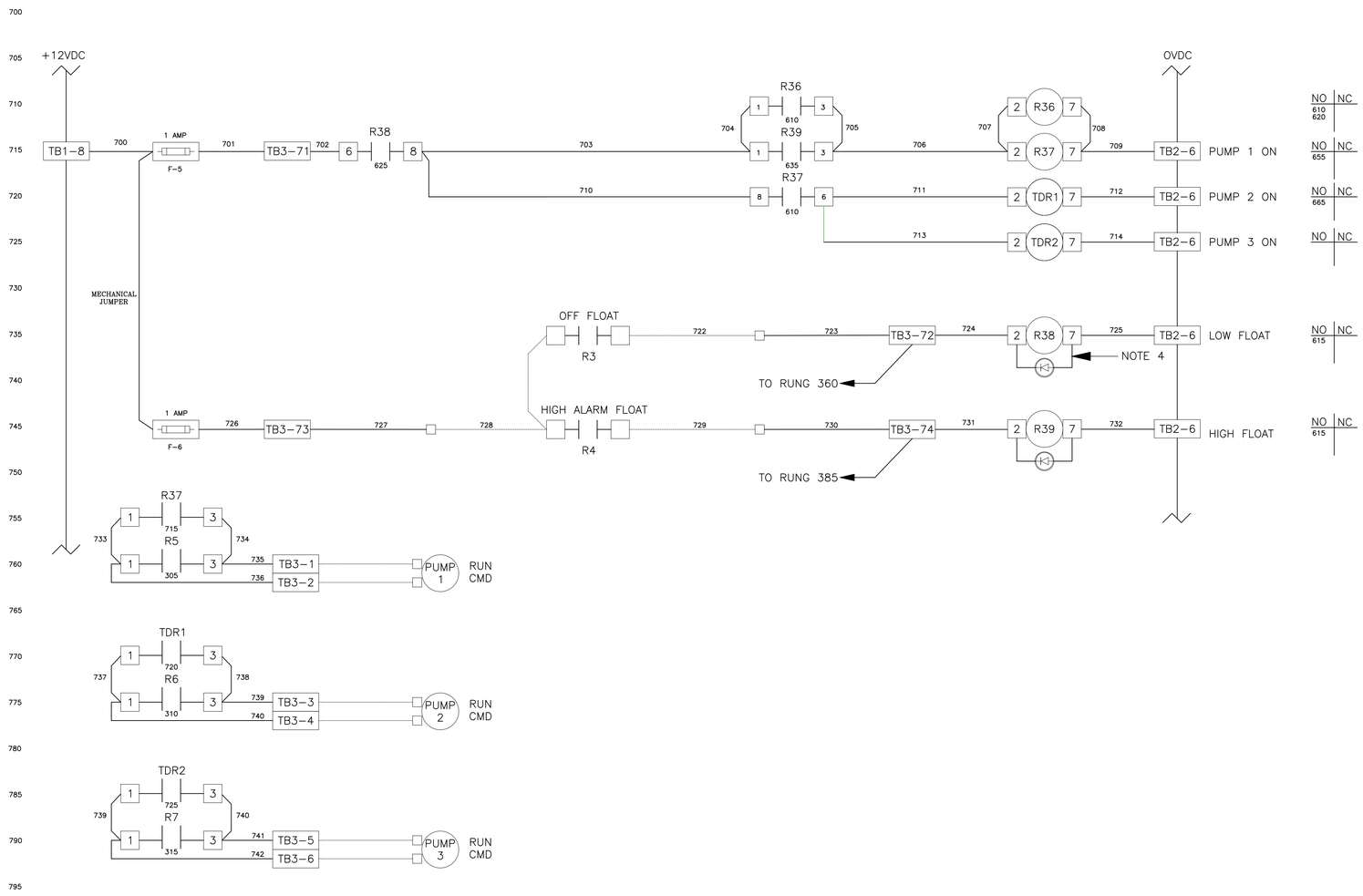

NOTE:

(1) ALL GROUNDING CONNECTIONS TO BE SINGLE POINT TO GROUND BUS ONLY.
(2) AC AND DC BUS ARE TYPICAL TERMINAL BLOCK BUSES.
(3) WIRES FOLLOW LEGEND UNLESS OTHERWISE MARKED.
(4) DIODE: PN: 006-0019 (1N4004)
(5) ALL POINT CONTACTS TO BE PROTECTED BY ANTIOXIDANT COMPOUND.

TRICON ENGINEERING
777 S. Harbour Island Blvd, STE 350, TAMPA, FL 33602
813.227.5190
Certificate of Authorization No. 00031028

This document, together with the concepts and designs presented herein, as an instrument of service, is intended only for the specific purpose and client for which it was prepared. Reuse of and improper reliance on this document without written authorization and adaptation by Kimley-Horn and Associates, Inc. shall be without liability to Kimley-Horn and Associates, Inc.

No.	REVISIONS	DATE	BY

Kimley»Horn

© 2021 KIMLEY-HORN AND ASSOCIATES, INC.

100 2ND AVENUE SOUTH, SUITE 105-N, ST. PETERSBURG, FL 33701
PHONE: 727-547-3999
WWW.KIMLEY-HORN.COM REGISTRY NO. 696

KHA PROJECT 148400067
DATE OCT 2021
SCALE AS SHOWN
DESIGNED BY TDT
DRAWN BY JLT
CHECKED BY GLW

Manatee County FLORIDA

BAYSHORE YACHT BASIN FORCE MAIN AND LIFT STATION REPLACEMENT

LICENSED PROFESSIONAL
TIMOTHY THOMAS, P.E.
47079
DATE:

DATA FLOW SYSTEMS CONTROL PANEL WIRING DIAGRAMS

SHEET NUMBER
I-9

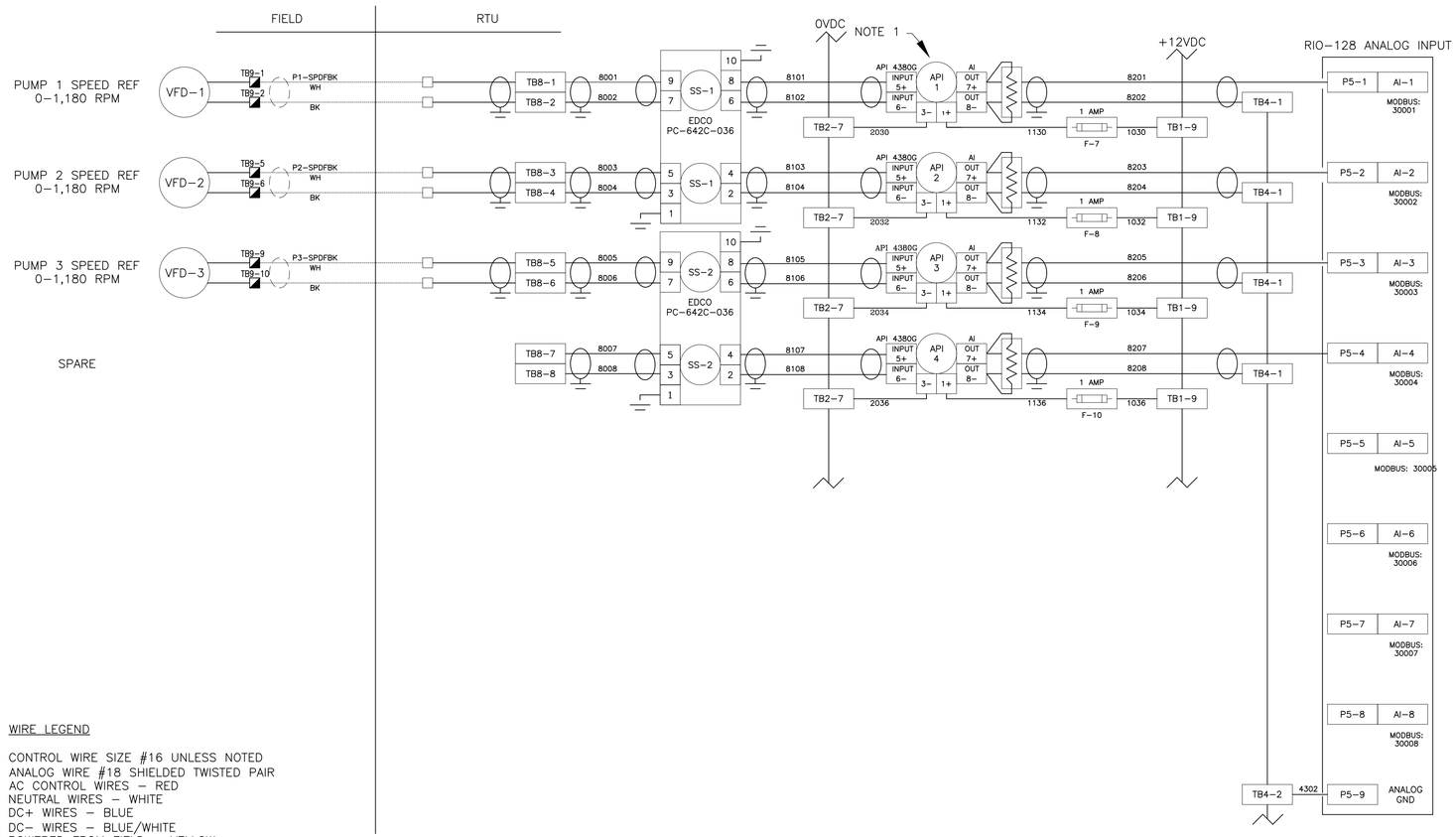

WIRE LEGEND

CONTROL WIRE SIZE #16 UNLESS NOTED
ANALOG WIRE #18 SHIELDED TWISTED PAIR
AC CONTROL WIRES – RED
NEUTRAL WIRES – WHITE
DC+ WIRES – BLUE
DC– WIRES – BLUE/WHITE
POWERED FROM FIELD – YELLOW
FIELD WIRING

NOTE:
(1) LOOP ISOLATORS ON ANALOG INPUTS MUST BE CORRECTLY CONFIGURED FOR 4–20ma INPUT & 4–20ma OUTPUT BEFORE INSTALLING; FAILURE TO DO SO WILL RESULT IN EQUIPMENT DAMAGE AND VOIDS FACTORY WARRANTY
(2) DO NOT EXCEED 5.5 VOLTS ON ANALOG INPUTS.
(3) LOOP ISOLATORS ARE RECOMMENDED FOR CIRCUIT PROTECTION.
(4) STATIC SENSITIVE DEVICES; OBSERVE PROPER ESD PROCEDURES DURING INSTALLATION.
(5) ALL POINT CONTACTS TO BE PROTECTED BY ANTIOXIDANT COMPOUND.

TRICON ENGINEERING
777 S. Harbour Island Blvd, STE 350, TAMPA, FL 33602
813.227.9190
Certificate of Authorization No. 00031028

This document, together with the concepts and designs presented herein, as an instrument of service, is intended only for the specific purpose and client for which it was prepared. Reuse of and improper reliance on this document without written authorization and adaptation by Kimley-Horn and Associates, Inc. shall be without liability to Kimley-Horn and Associates, Inc.

No.	REVISIONS	DATE	BY

Kimley»Horn
© 2021 KIMLEY–HORN AND ASSOCIATES, INC.
100 2ND AVENUE SOUTH, SUITE 105–N, ST. PETERSBURG, FL 33701
PHONE: 727–547–3999
WWW.KIMLEY–HORN.COM REGISTRY NO. 696

KHA PROJECT 148400067
DATE OCT 2021
SCALE AS SHOWN
DESIGNED BY TDT
DRAWN BY JLT
CHECKED BY GLW

Manatee County FLORIDA

BAYSHORE YACHT BASIN FORCE MAIN AND LIFT STATION REPLACEMENT

LICENSED PROFESSIONAL
TIMOTHY THOMAS, P.E.
47079
DATE:

DATA FLOW SYSTEMS CONTROL PANEL WIRING DIAGRAMS

SHEET NUMBER
I-10

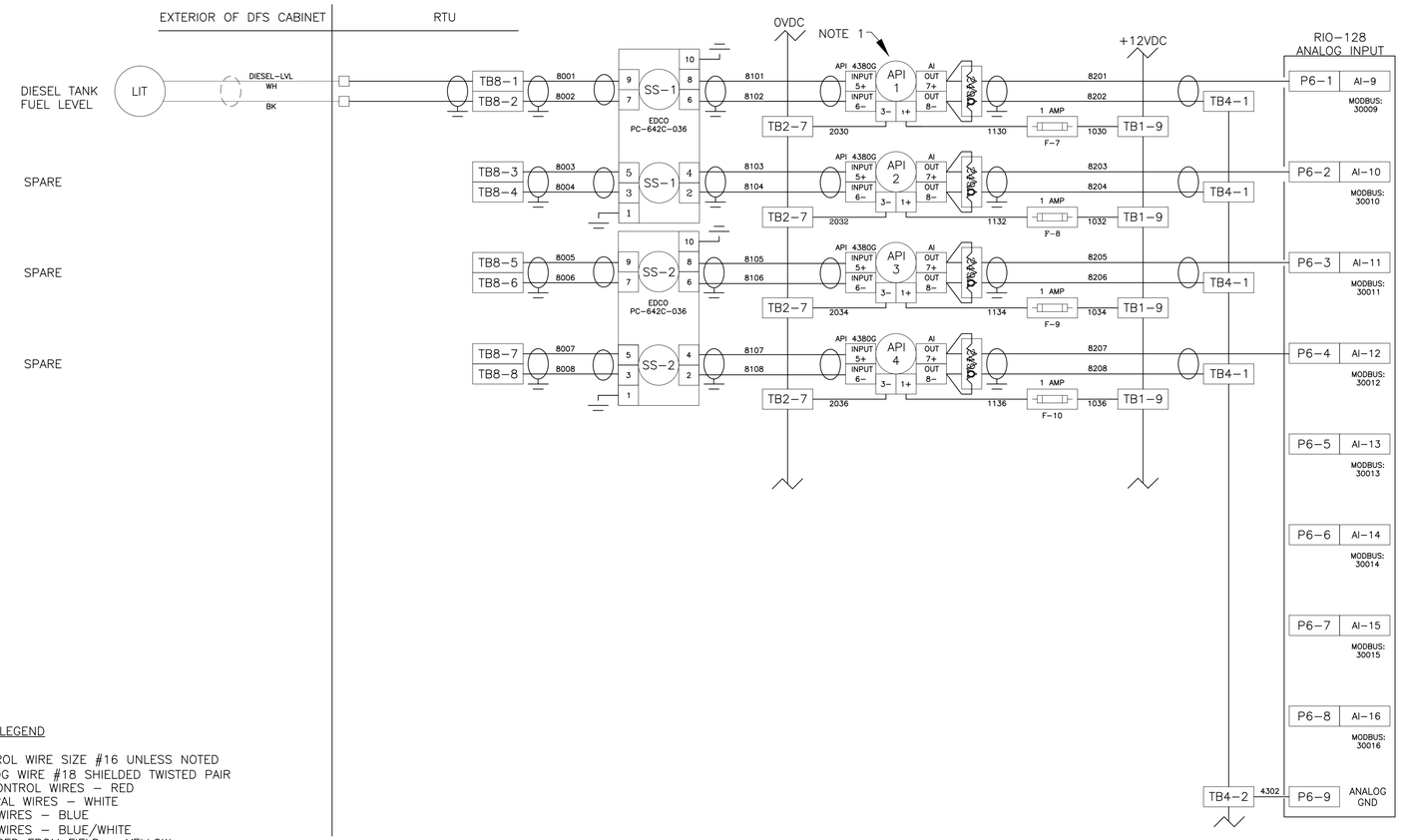

WIRE LEGEND

CONTROL WIRE SIZE #16 UNLESS NOTED
ANALOG WIRE #18 SHIELDED TWISTED PAIR
AC CONTROL WIRES – RED
NEUTRAL WIRES – WHITE
DC+ WIRES – BLUE
DC– WIRES – BLUE/WHITE
POWERED FROM FIELD – YELLOW
FIELD WIRING

NOTE:
(1) LOOP ISOLATORS ON ANALOG INPUTS MUST BE CORRECTLY CONFIGURED FOR 4–20ma INPUT & 4–20ma OUTPUT BEFORE INSTALLING; FAILURE TO DO SO WILL RESULT IN EQUIPMENT DAMAGE AND VOIDS FACTORY WARRANTY
(2) DO NOT EXCEED 5.5 VOLTS ON ANALOG INPUTS.
(3) LOOP ISOLATORS ARE RECOMMENDED FOR CIRCUIT PROTECTION.
(4) STATIC SENSITIVE DEVICES; OBSERVE PROPER ESD PROCEDURES DURING INSTALLATION.
(5) ALL POINT CONTACTS TO BE PROTECTED BY ANTIOXIDANT COMPOUND.

TRICON ENGINEERING
777 S. Harbour Island Blvd, STE 350, TAMPA, FL 33602
813.227.9190
Certificate of Authorization No. 00031028

This document, together with the concepts and designs presented herein, as an instrument of service, is intended only for the specific purpose and client for which it was prepared. Reuse of and improper reliance on this document without written authorization and adaptation by Kimley-Horn and Associates, Inc. shall be without liability to Kimley-Horn and Associates, Inc.

No.	REVISIONS	DATE	BY

Kimley»Horn
© 2021 KIMLEY-HORN AND ASSOCIATES, INC.
100 2ND AVENUE SOUTH, SUITE 105-N, ST. PETERSBURG, FL 33701
PHONE: 727-547-3999
WWW.KIMLEY-HORN.COM REGISTRY NO. 696

KHA PROJECT 148400067
DATE OCT 2021
SCALE AS SHOWN
DESIGNED BY TDT
DRAWN BY JLT
CHECKED BY GLW

Manatee County Florida

BAYSHORE YACHT BASIN FORCE MAIN AND LIFT STATION REPLACEMENT

LICENSED PROFESSIONAL
TIMOTHY THOMAS, P.E.
47079
DATE:

DATA FLOW SYSTEMS CONTROL PANEL WIRING DIAGRAMS

SHEET NUMBER
I-11

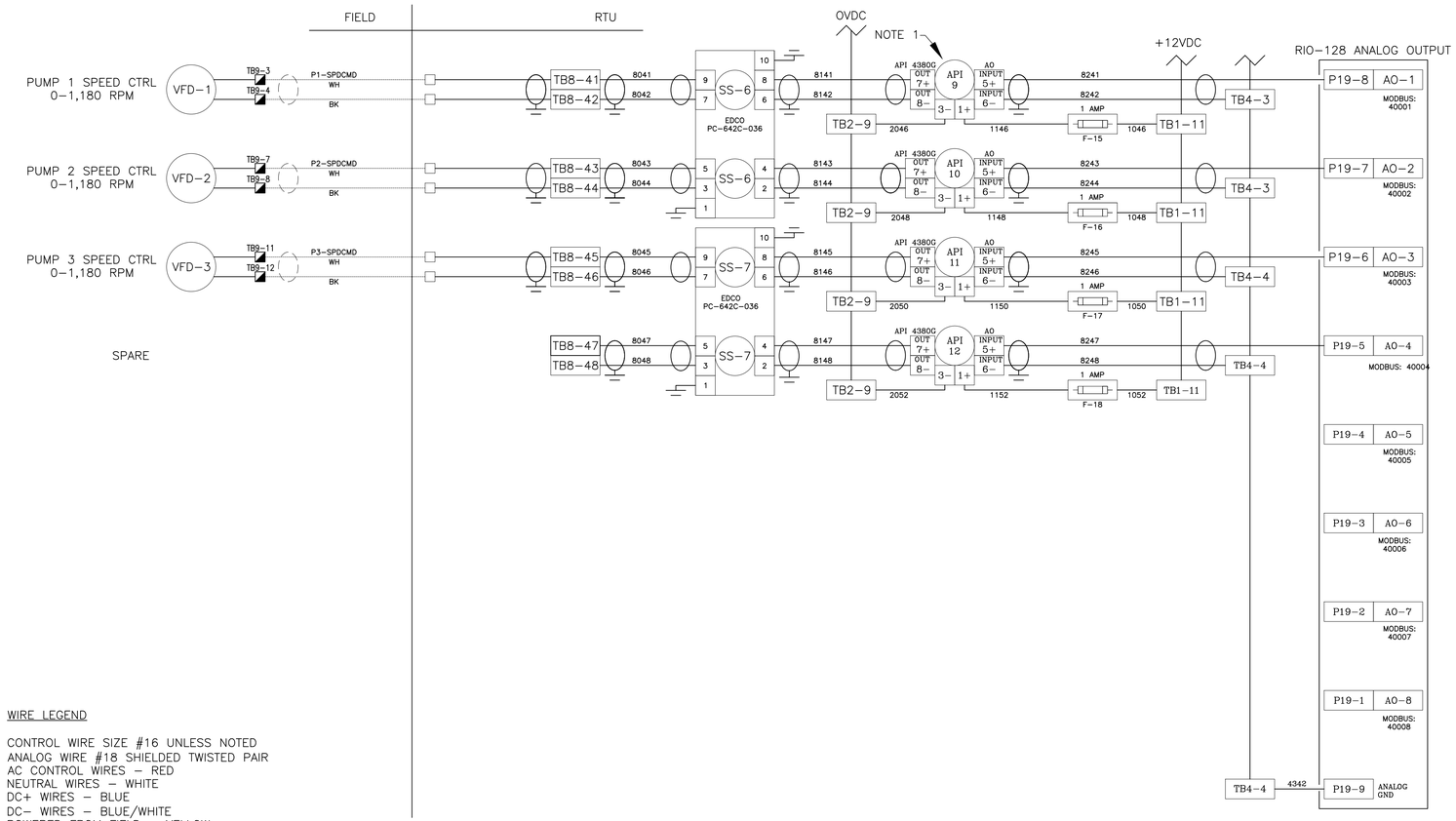

WIRE LEGEND

CONTROL WIRE SIZE #16 UNLESS NOTED
ANALOG WIRE #18 SHIELDED TWISTED PAIR
AC CONTROL WIRES – RED
NEUTRAL WIRES – WHITE
DC+ WIRES – BLUE
DC– WIRES – BLUE/WHITE
POWERED FROM FIELD – YELLOW
FIELD WIRING ————————————

NOTE:
(1) LOOP ISOLATORS ON ANALOG INPUTS MUST BE CORRECTLY CONFIGURED FOR 4–20ma INPUT & 4–20ma OUTPUT BEFORE INSTALLING; FAILURE TO DO SO WILL RESULT IN EQUIPMENT DAMAGE AND VOIDS FACTORY WARRANTY
(2) DO NOT EXCEED 5.5 VOLTS ON ANALOG INPUTS.
(3) LOOP ISOLATORS ARE RECOMMENDED FOR CIRCUIT PROTECTION.
(4) STATIC SENSITIVE DEVICES; OBSERVE PROPER ESD PROCEDURES DURING INSTALLATION.
(5) ALL POINT CONTACTS TO BE PROTECTED BY ANTIOXIDANT COMPOUND.

TRICON ENGINEERING
777 S. Harbour Island Blvd, STE 350, TAMPA, FL 33602
813.227.9190
Certificate of Authorization No. 00031028

This document, together with the concepts and designs presented herein, as an instrument of service, is intended only for the specific purpose and client for which it was prepared. Reuse of and improper reliance on this document without written authorization and adaptation by Kimley-Horn and Associates, Inc. shall be without liability to Kimley-Horn and Associates, Inc.

No.	REVISIONS	DATE	BY

Kimley»Horn
© 2021 KIMLEY-HORN AND ASSOCIATES, INC.
100 2ND AVENUE SOUTH, SUITE 105-N, ST. PETERSBURG, FL 33701
PHONE: 727-547-3999
WWW.KIMLEY-HORN.COM REGISTRY NO. 696

KHA PROJECT 148400067
DATE OCT 2021
SCALE AS SHOWN
DESIGNED BY TDT
DRAWN BY JLT
CHECKED BY GLW

Manatee County

BAYSHORE YACHT BASIN FORCE MAIN AND LIFT STATION REPLACEMENT

LICENSED PROFESSIONAL
TIMOTHY THOMAS, P.E.
47079
DATE:

DATA FLOW SYSTEMS CONTROL PANEL WIRING DIAGRAMS

SHEET NUMBER
I-12

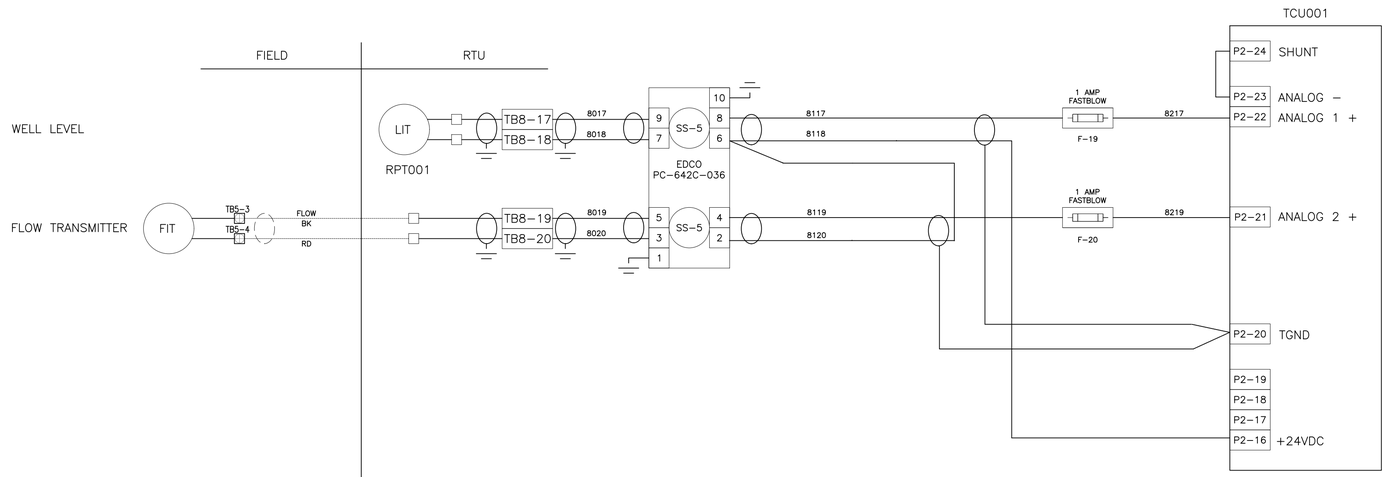

WIRE LEGEND

CONTROL WIRE SIZE #16 UNLESS NOTED
ANALOG WIRE #18 SHIELDED TWISTED PAIR
AC CONTROL WIRES – RED
NEUTRAL WIRES – WHITE
DC+ WIRES – BLUE
DC– WIRES – BLUE/WHITE
POWERED FROM FIELD – YELLOW
FIELD WIRING

NOTE:
(1) LOOP ISOLATORS ON ANALOG INPUTS MUST BE CORRECTLY CONFIGURED FOR 4–20ma INPUT & 4–20ma OUTPUT BEFORE INSTALLING; FAILURE TO DO SO WILL RESULT IN EQUIPMENT DAMAGE AND VOIDS FACTORY WARRANTY
(2) DO NOT EXCEED 5.5 VOLTS ON ANALOG INPUTS.
(3) LOOP ISOLATORS ARE RECOMMENDED FOR CIRCUIT PROTECTION.
(4) STATIC SENSITIVE DEVICES; OBSERVE PROPER ESD PROCEDURES DURING INSTALLATION.
(5) ALL POINT CONTACTS TO BE PROTECTED BY ANTIOXIDANT COMPOUND.

TRICON ENGINEERING
777 S. Harbour Island Blvd, STE 350, TAMPA, FL 33602
813.227.9190
Certificate of Authorization No. 00031028

This document, together with the concepts and designs presented herein, as an instrument of service, is intended only for the specific purpose and client for which it was prepared. Reuse of and improper reliance on this document without written authorization and adaptation by Kimley-Horn and Associates, Inc. shall be without liability to Kimley-Horn and Associates, Inc.

No.	REVISIONS	DATE	BY

Kimley»Horn
© 2021 KIMLEY–HORN AND ASSOCIATES, INC.
100 2ND AVENUE SOUTH, SUITE 105–N, ST. PETERSBURG, FL 33701
PHONE: 727–547–3999
WWW.KIMLEY–HORN.COM REGISTRY NO. 696

KHA PROJECT 148400067
DATE OCT 2021
SCALE AS SHOWN
DESIGNED BY TDT
DRAWN BY JLT
CHECKED BY GLW

Manatee County

BAYSHORE YACHT BASIN FORCE MAIN AND LIFT STATION REPLACEMENT

LICENSED PROFESSIONAL
TIMOTHY THOMAS, P.E.
47079
DATE:

DATA FLOW SYSTEMS CONTROL PANEL WIRING DIAGRAMS

SHEET NUMBER
I-13

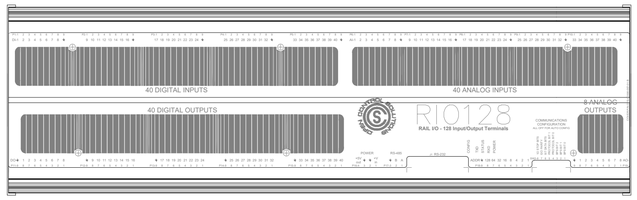

SEE NOTES

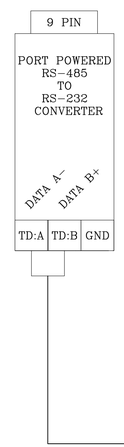

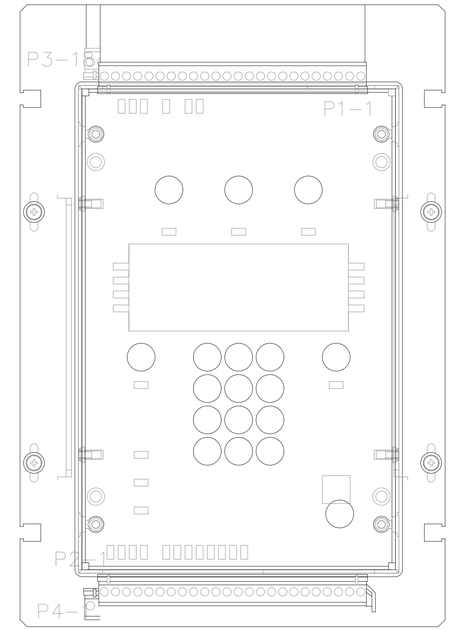

SEE NOTES

NOTE:
(1) RIO-128 CONNECTOR J1 (RS-232) CONNECT RS-485 PORT POWERED CONNECTOR
(2) RS-485 TERMINAL BLOCK TD:B (DATA B+) TERMINATES TO TCU CONNECTOR P4-3
(3) RS-485 TERMINAL BLOCK TD:A (DATA A-) TERMINATES TO TCU CONNECTOR P4-4
(4) TERMINATE THE SHIELD OF THE COMMUNICATION CABLE TO TCU CONNECTOR P4-5

TRICON ENGINEERING
777 S. Harbour Island Blvd, STE 350, TAMPA, FL 33602
813.227.5190
Certificate of Authorization No. 00031028

This document, together with the concepts and designs presented herein, as an instrument of service, is intended only for the specific purpose and client for which it was prepared. Reuse of and improper reliance on this document without written authorization and adaptation by Kimley-Horn and Associates, Inc. shall be without liability to Kimley-Horn and Associates, Inc.

No.	REVISIONS	DATE	BY

Kimley»Horn
© 2021 KIMLEY-HORN AND ASSOCIATES, INC.
100 2ND AVENUE SOUTH, SUITE 105-N, ST. PETERSBURG, FL 33701
PHONE: 727-547-3999
WWW.KIMLEY-HORN.COM REGISTRY NO. 696

KHA PROJECT 148400067
DATE OCT 2021
SCALE AS SHOWN
DESIGNED BY TDT
DRAWN BY JLT
CHECKED BY GLW

Manatee County FLORIDA

BAYSHORE YACHT BASIN FORCE MAIN AND LIFT STATION REPLACEMENT

LICENSED PROFESSIONAL
TIMOTHY THOMAS, P.E.
47079
DATE:

DATA FLOW SYSTEMS CONTROL PANEL WIRING DIAGRAMS

SHEET NUMBER
I-14

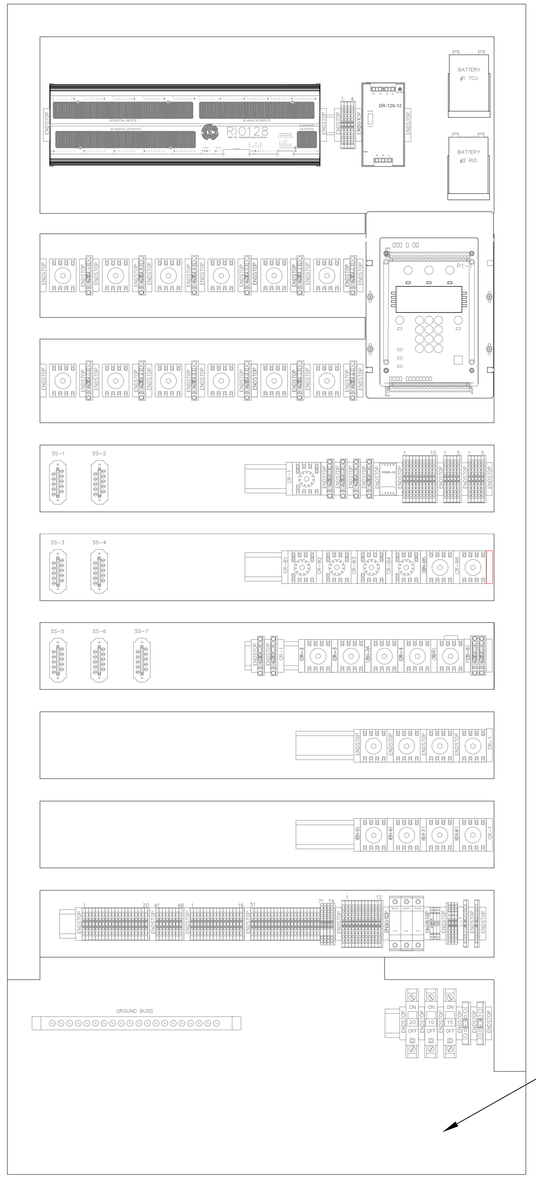

TCU/VFD CABINET TO BE PROVIDED WITH RAIL PRESSURE TRANSDUCER, DFS RPT001, 120V PUMP AND REQUIRED ACCESSORIES (DFS SMALL PARTS KIT DFS-00526-008-02).

DFS TCU/VFD PANEL INTERIOR ELEVATION

SCALE: NOT TO SCALE

A
E-6 | I-15

TRICON ENGINEERING
777 S. Harbour Island Blvd, STE 350, TAMPA, FL 33602
813.227.9190
Certificate of Authorization No. 00031028

This document, together with the concepts and designs presented herein, as an instrument of service, is intended only for the specific purpose and client for which it was prepared. Reuse of and improper reliance on this document without written authorization and adaptation by Kimley-Horn and Associates, Inc. shall be without liability to Kimley-Horn and Associates, Inc.

No.	REVISIONS	DATE	BY

Kimley»Horn

© 2021 KIMLEY-HORN AND ASSOCIATES, INC.

100 2ND AVENUE SOUTH, SUITE 105-N, ST. PETERSBURG, FL 33701
PHONE: 727-547-3999
WWW.KIMLEY-HORN.COM REGISTRY NO. 696

KHA PROJECT 148400067
DATE OCT 2021
SCALE AS SHOWN
DESIGNED BY TDT
DRAWN BY JLT
CHECKED BY GLW

Manatee County FLORIDA

BAYSHORE YACHT BASIN FORCE MAIN AND LIFT STATION REPLACEMENT

LICENSED PROFESSIONAL
TIMOTHY THOMAS, P.E.
47079
DATE:

DATA FLOW SYSTEMS
TCU/VFD PANEL LAYOUT

SHEET NUMBER
I-15

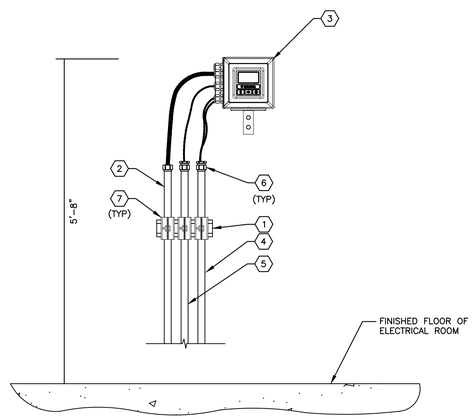

FLOW METER PANEL ELEVATION 1

SCALE: NOT TO SCAL

E-6 | I-16

KEYED NOTES:

1. PROVIDE AND INSTALL 1-5/8" 316 STAINLESS STEEL UNISTRUT (OR EQUAL) TO FASTEN CONDUITS TO WALL.
2. PROVIDE AND INSTALL 2-#12 + 1-#12 GND IN 1" CONDUIT FROM PANELBOARD 'LP' TO FLOW METER CONVERTER FOR 120V POWER. PROVIDE FLEXIBLE SEALTITE CONNECTION TO FLOW METER CONVERTER. (LP-9).
3. PROVIDE AND INSTALL FLOW METER CONVERTER. MOUNT TO WALL OF ELECTRICAL BUILDING. REFER ALSO TO SPECIFICATIONS.
4. PROVIDE AND INSTALL MANUFACTURER SUPPLIED SENSOR CABLES (SIG1 AND SIG2) IN 1"C. TO FIELD SENSOR (C2).
5. PROVIDE AND INSTALL 2/C-#16 SHIELDED (BELDEN 8719) IN 1"C. (4-20mA FLOW METER SIGNAL) TO DFS TCU/VFD CONTROL PANEL (C1).
6. PROVIDE AND INSTALL CABLE GLAND ON THE END OF EACH CONDUIT. REFER ALSO TO GENERAL NOTES.
7. PROVIDE AND INSTALL 316 STAINLESS STEEL CONDUIT CLAMPS.

GENERAL NOTES:

1. THE FLOW METER CONVERTER SPECIFIED ACCEPTS ONLY CABLE TYPE CONNECTIONS. THE CONTRACTOR SHALL PROVIDE AND APPROPRIATE CABLE GLAND ON THE END OF EACH CONDUIT AS REQUIRED.
2. THE CONTRACTOR SHALL PROVIDE ALL GROUNDING AND BONDING AS REQUIRED BY THE FLOW CONVERTER MANUFACTURER. REFER TO THE MANUFACTURER'S SPECIFICATIONS.

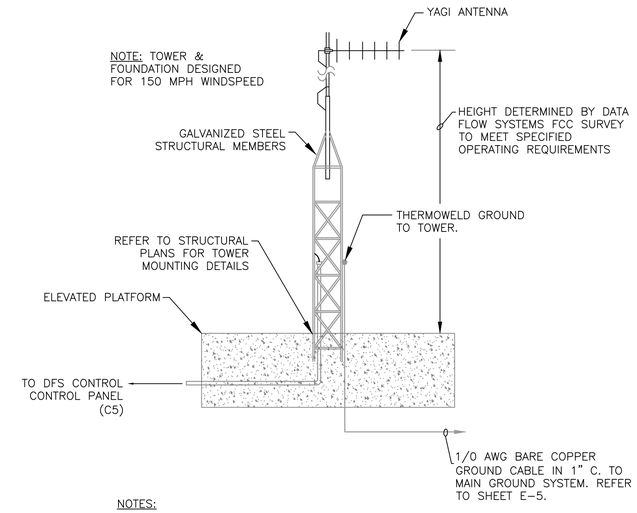

NOTES:

1. THE CONTRACTOR SHALL INSTALL NEW GROUND ROD, GROUND TEST WELL AND CONNECT TO NEW GROUNDING GRID. CONTRACTOR SHALL ALSO INSTALL NEW CONDUIT AND COAXIAL CABLE.
2. THE NEW TELEMETRY SYSTEM ANTENNA SHALL BE SUPPLIED BY "DATA FLOW SYSTEMS" AND BE COMPATIBLE WITH EXISTING SYSTEMS-NO EXCEPTIONS.
3. USE COMPRESSION FITTING TO SEAL COAX CABLE INTO J-BOX.
4. J-BOX TO BE W.P. STAINLESS STEEL CONSTRUCTION-NO EXCEPTIONS.

DFS ANTENNA/TOWER DETAIL 1

SCALE: NOT TO SCAL

E-2 | I-16

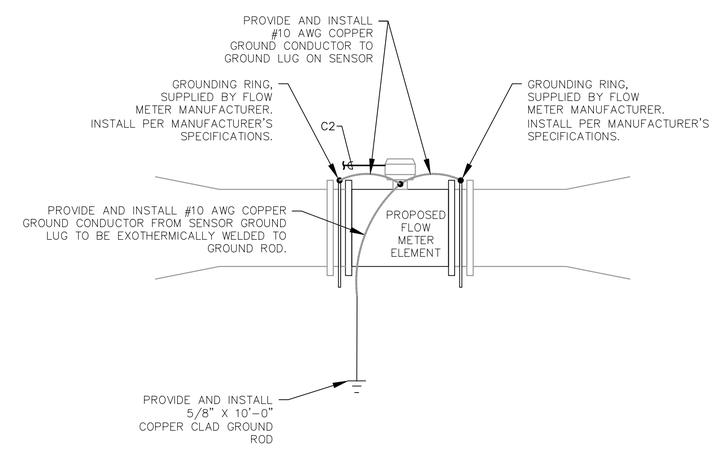

FLOW ELEMENT INSTALLATION DETAIL 2

SCALE: NOT TO SCAL

E-2 | I-16

TRICON ENGINEERING
777 S. Harbour Island Blvd, STE 350, TAMPA, FL 33602
813.227.9190
Certificate of Authorization No. 00031028

This document, together with the concepts and designs presented herein, as an instrument of service, is intended only for the specific purpose and client for which it was prepared. Reuse of and improper reliance on this document without written authorization and adaptation by Kimley-Horn and Associates, Inc. shall be without liability to Kimley-Horn and Associates, Inc.

No.	REVISIONS	DATE	BY

Kimley»Horn
© 2021 KIMLEY-HORN AND ASSOCIATES, INC.
100 2ND AVENUE SOUTH, SUITE 105-N, ST. PETERSBURG, FL 33701
PHONE: 727-547-3999
WWW.KIMLEY-HORN.COM REGISTRY NO. 696

KHA PROJECT 148400067
DATE OCT 2021
SCALE AS SHOWN
DESIGNED BY TDT
DRAWN BY JLT
CHECKED BY GLW

Manatee County FLORIDA

BAYSHORE YACHT BASIN FORCE MAIN AND LIFT STATION REPLACEMENT

LICENSED PROFESSIONAL
TIMOTHY THOMAS, P.E.
47079
DATE:

INSTRUMENTATION DETAILS

SHEET NUMBER
I-16