PLUMBING SPECIFICATIONS

PLUMBING

SCOPE OF WORK AND GENERAL CONDITIONS

THE WORK COVERED INCLUDES ALL LABOR, MATERIAL AND EQUIPMENT REQUIRED FOR FURNISHING, INSTALLING AND TESTING COMPLETE AND READY FOR OPERATION ALL THE WORK SHOWN ON THE PLUMBING DRAWINGS AND AS SPECIFIED HEREIN, AND SHALL INCLUDE BUT NOT NECESSARILY BE LIMITED TO THE FOLLOWING ITEMS:

THE INSTALLATION OF AN 8,000 GALLON ABOVEGROUND DOUBLE WALL STEEL DIESEL FUEL TANK AND ASSOCIATED PIPING AND COMPONENTS.

THE DEMOLITION OF AN EXISTING 8,000 GALLON UNDERGROUND DIESEL FUEL TANK. TANK SHALL BE FILLED WITH INERT FOAM AND ASSOCIATED PIPING SHALL BE REMOVED OR ABANDONED.

CONTRACTOR SHALL COORDINATE ALL WORK WITH OTHER TRADES AND OTHER CONSTRUCTION DOCUMENTS.

NO ASBESTOS CONTAINING BUILDING MATERIAL (ACBM) HAS BEEN SPECIFIED AS A BUILDING MATERIAL IN ANY CONSTRUCTION DOCUMENT FOR THE BUILDING. NO ASBESTOS CONTAINING BUILDING MATERIAL (ACBM) SHALL BE INSTALLED.

THE DESIGN AND CONSTRUCTION OF THIS PROJECT SHALL BE IN COMPLETE CONFORMANCE WITH THE FOLLOWING:

1. LIFE SAFETY CODE NFPA 101–2006.
2. NATIONAL ELECTRIC CODE NFPA 70–2005.
3. FLORIDA BUILDING CODE 2007, BUILDING.
4. FLORIDA BUILDING CODE 2007, MECHANICAL.
5. FLORIDA BUILDING CODE 2007, PLUMBING.
6. FLORIDA BUILDING CODE 2007, FUEL GAS.
7. FLORIDA ENERGY EFFICIENCY CODE FOR BUILDING CONSTRUCTION, 2007.
8. U.L. 142, UNDERWRITERS LABORATORIES, INC., STEEL ABOVEGROUND TANKS FOR FLAMMABLE AND COMBUSTIBLE LIQUIDS.
9. U.L. 2085, UNDERWRITERS LABORATORIES 2 HOUR FIRE RATING'S STANDARD FOR INSULATED ABOVEGROUND STORAGE TANKS FOR FLAMMABLE AND COMBUSTIBLE LIQUIDS.
10. NFPA 30, NATIONAL FIRE PROTECTION ASSOCIATION FLAMMABLE AND COMBUSTIBLE CODE.

SUBMITTALS

SUBMITTALS ARE REQUIRED FOR ALL MATERIAL AND EQUIPMENT WHICH THE CONTRACTOR PROPOSES TO FURNISH. SHOP DRAWINGS MUST BE APPROVED BY THE ARCHITECT PRIOR TO ORDERING AND INSTALLING EQUIPMENT. DATA SHALL BE COMPILED IN BROCHURE FORM AND ALL SUBMITTED AT ONE TIME.

SHOP DRAWINGS OR CUT SHEETS REQUIRED, INCLUDE:

ABOVEGROUND STORAGE TANK
PLUMBING TUBE, PIPE, AND FITTINGS
REMOTE FILL STATION
REMOTE PUMPING UNIT
FLOATS
VALVES
PROBES
SHOP DRAWINGS OF PIPING LAYOUT AND FITTINGS

PERMITS AND FEES

THE CONTRACTOR SHALL ARRANGE AND PAY FOR ALL PERMITS AND INSPECTIONS REQUIRED IN THIS WORK. OWNER SHALL PAY FOR ALL UTILITY IMPACT AND TAPPING FEES.

PIPING INSTALLATION

GENERAL

ARRANGE, INSTALL PIPING APPROXIMATELY AS INDICATED, STRAIGHT, PLUMB AND AS DIRECT AS POSSIBLE; FORM RIGHT ANGLES OR PARALLEL LINES WITH BUILDING WALLS.

CLOSE OPEN ENDS OF WORK WITH TEMPORARY COVERS OR PLUGS DURING STORAGE AND CONSTRUCTION TO PREVENT ENTRY OF OBSTRUCTING MATERIAL.

KEEP PIPES CLOSE TO WALLS, PARTITIONS, CEILING; OFF–SET ONLY WHERE NECESSARY TO FOLLOW WALLS AS DIRECTED.

LOCATE GROUPS OF PIPES PARALLEL TO EACH OTHER; SPACE THE PIPES AT DISTANCE TO PERMIT APPLYING FULL INSULATION AND TO PERMIT ACCESS FOR SERVICING VALVES.

REAM ENDS OF PIPES AND TUBES AND REMOVE BURRS.

GRADING

INSTALL HORIZONTAL PIPING AS HIGH AS POSSIBLE WITHOUT SAGS OR HUMPS.

INSTALL VENT PIPING PITCHED TO DRAIN AT MINIMUM SLOPE OF 1/4" PER FOOT (2 PERCENT) FOR PIPING 2" AND SMALLER, AND 1/8" PER FOOT (1 PERCENT) FOR PIPING 3" AND LARGER.

HANGERS AND INSERTS

PROVIDE A SUFFICIENT NUMBER OF HANGERS PROPERLY LOCATED TO SUPPORT THE PIPING AND EQUIPMENT. HANGERS SHALL BE PLACED TO PERMIT EXPANSION AND CONTRACTION OF THE PIPING. PIPE HANGERS SHALL BE SPLIT RING HANGERS CAPABLE OF VERTICAL ADJUSTMENT AFTER ERECTION OF THE PIPING. TRAPEZE TYPE HANGERS MAY BE USED FOR MULTIPLE PIPE RUNS INSTALLED AT THE SAME LEVEL AND GRADE. PIPE SHALL BE SECURED TO TRAPEZE USING U–BOLTS.

THE SIZE OF THE HANGER SHALL BE SUITABLE FOR THE PIPE SIZE AND APPLICATION.

INSERTS REQUIRED IN EXISTING CONCRETE WORK, SHALL BE "RAMSETS" OR "LEAD TAMPIN" EXPANSION SHIELDS.

SLEEVES

INSTALL SLEEVES FOR PIPING PENETRATIONS OF WALLS, CEILINGS, AND FLOORS.

INSTALL SLEEVE SEALS FOR PIPING PENETRATIONS OF CONCRETE WALLS AND SLABS.

SLEEVES THROUGH WALLS, PARTITIONS, CEILINGS, AND FLOORS ON GRADE SHALL BE OF SUFFICIENT LENGTH TO EXTEND THROUGH FINISHED SURFACE.

ALL SLEEVES SHALL BE OF ADEQUATE SIZE TO PERMIT CLEARANCE FOR PIPE MOVEMENT AND PROPER GRADING OF PIPES. SLEEVES FOR INSULATED PIPE SHALL BE ADEQUATELY SIZED TO CLEAR THE INSULATION.

DIELECTRIC UNIONS

IN CASES WHERE IT IS NECESSARY TO CONNECT FERROUS PIPING TO NON–FERROUS PIPING, INSTALL AN INSULATING FITTING EQUAL TO EPCO DIELECTRIC PIPE FITTINGS AS MANUFACTURED BY EPCO SALES, INC. OR APPROVED EQUAL.

FUEL PIPING

FUEL PIPING SHALL BE ONE OF THE FOLLOWING:
BLACK STEEL, SCHEDULE 40, TYPE E OR S, ASTM A 53/A 53M

VENT PIPING

FUEL VENT PIPING SHALL BE ONE OF THE FOLLOWING:
BLACK STEEL, SCHEDULE 40, TYPE E OR S, ASTM A 53/A 53M

GENERAL

VENT PIPING SHALL BE RUN AS DIRECT AS POSSIBLE. VENTS SHALL TERMINATE NOT LESS THAN 12' ABOVE THE GROUND AND NOT LESS THAN 5' FROM OPENINGS ON THE BUILDING.

VALVES AND SPECIALTY ITEMS

ALL VALVES AND SPECIALTY ITEMS MAY NOT BE SHOWN IN EVERY INSTANCE ON THE DRAWINGS, BUT ARE TO BE PROVIDED WHETHER SHOWN OR NOT WHEN NECESSARY FOR PROPER OPERATION AND MAINTENANCE OF THE SYSTEM.

UNLESS OTHERWISE NOTED, VALVES AND SPECIALTY ITEMS ARE TO BE RATED AT 125 PSIG.

EQUIPMENT

ABOVEGROUND STORAGE TANK(AST)

THE AST SHALL BE A MODERN WELDING COMPANY FIREGUARD DOUBLE WALL CYLINDRICAL TANK. THE INTERSTITIAL SPACE BETWEEN THE PRIMARY AND SECONDARY TANKS SHALL BE FILLED WITH LIGHTWEIGHT THERMAL INSULATION. THE AST SHALL BE APPROXIMATELY 21'–10" BY 102" IN DIAMETER. THE AST SHALL WEIGHT APPROXIMATELY 23,000 LBS. EMPTY.

FITTINGS: THREADED/NPT
MONITOR PIPE: 2"
FILL OPENING: 3"
PUMP OPENING: 4"
GAUGE OPENING: 4"
GAUGE OPENING: 4"
MANWAY: SIZED BY MANUFACTURER
PRIMARY NORMAL VENT: SIZED BY MANUFACTURER
SECONDARY EMERGENCY VENT: SIZED BY MANUFACTURER
PRIMARY EMERGENCY VENT: SIZED BY MANUFACTURER

REMOTE FILL STATION(RFS)

THE RFS SHALL BE A PRYCO #230 REMOTE FILL STATION, WITH LOCKABLE, WEATHERPROOF, DUAL DOOR ENCLOSURE. THE ELECTRICAL COMPARTMENT HOUSES CONTROL COMPONENTS. THE FUELING COMPARTMENT HOUSES A 3" CAMLOCK CONNECTOR, A CHECK VALVE, AND A MANUAL SHUT–OFF VALVE. THIS COMPARTMENT IS DESIGNED WITH A 7.5 GALLON SUMP WITH DRAIN. PROVIDE 95% TANK FILL SOLENOID VALVE, 90% TANK FILL FLOAT, AND 95% TANK FILL FLOAT.

REMOTE PUMPING UNIT(RPU)

THE RPU SHALL BE A PRYCO REMOTE PUMPING UNIT #397–18A WITH THE FOLLOWING COMPONENTS;
LOW FUEL LEVEL SWITCH, DRY CONTACTS, 15–150 GALLONS
FLOAT SWITCH
CHECK VALVE, PUMP INTAKE, 1" NPT, ON RETURN
8 GPM PUMP, FOR PART ONLY, RETURN
1/2 HP MOTOR, 1Ø, RETURN
INSPECTION PLATE GASKET
INSPECTION PLATE, CAT YELLO

TANK MONITORING SYSTEM(TMS)

THE TMS SHALL BE A VEEDER ROOT TLS–300C TANK MONITORING SYSTEM WITH INTEGRAL PRINTER. AN INTERSTITIAL SENSOR FOR STEEL TANKS AND A MAGNETOSTRICTIVE PROBE FOR INVENTORY MONITORING SHALL BE WIRED TO TMS. PROVIDE A LIGHT AND ALARM HORN FOR CONNECTION TO TMS OUTPUT RELAYS.

COMPLETION OF WORK

TESTING

ALL PIPING INSTALLED ON THE PROJECT, UNLESS SPECIFICALLY SHOWN OTHERWISE, SHALL BE TESTED AS SPECIFIED HEREIN. THE PLUMBING CONTRACTOR SHALL PROVIDE ALL EQUIPMENT REQUIRED TO MAKE THE TESTS SPECIFIED HEREIN. ALL PIPING SHALL BE TESTED PRIOR TO BACKFILLING OR CONCEALING.

FUEL GAS PIPING SHALL BE TESTED, INSPECTED, AND PURGED ACCORDING TO NFPA 58, NFPA 54, AND THE REQUIREMENTS OF AUTHORITIES HAVING JURISDICTION.

DELICATE CONTROLS

WHEN DELICATE CONTROL MECHANISMS ARE INSTALLED IN THE PIPING SYSTEM, THEY SHALL BE REMOVED DURING THE TESTS TO PREVENT SHOCK DAMAGE. THIS DOES NOT APPLY TO CONTROL VALVES.

LEAKS

LEAKS DEVELOPING SUBSEQUENT TO THESE TESTS SHALL NOT BE REPAIRED BY MASTIC OR OTHER TEMPORARY MEANS. ALL LEAKS SHALL BE REPAIRED BY REMOVAL OF THE VALVE, FITTING, JOINT, OR SECTION THAT IS LEAKING AND REINSTALLING NEW MATERIAL WITH JOINTS AS SPECIFIED HEREIN BEFORE.

WARRANTY

ALL PARTS, MATERIAL, EQUIPMENT AND LABOR FURNISHED UNDER THIS SECTION OF THE SPECIFICATIONS SHALL BEAR A ONE (1) YEAR, NO COST TO THE OWNER, WARRANTY FROM DATE OF SUBSTANTIAL COMPLETION.

THE PLUMBING CONTRACTOR SHALL PROVIDE ALL OF THE ABOVE WARRANTY REQUIREMENTS IN A WRITTEN STATEMENT ALONG WITH EQUIPMENT MANUFACTURER'S WARRANTIES.

DEMOLITION NOTES:

SEE DEMOLITION NOTES ON SHEET E–1. CONTRACTOR SHALL REVIEW AND COMPLY WITH STATED REQUIREMENTS.

SEQUENCE OF OPERATION:

MAIN TANK:
WHEN THE MAIN TANK LEVEL FALLS TO 50% CAPACITY, A LIGHT LOCATED ON THE WALL ABOVE THE REMOTE FILL STATION AND LABELED "FUEL TANK LEVEL LOW" SHALL COME ON.

WHEN THE MAIN TANK IS FILLED TO 90% CAPACITY, A WARNING LIGHT SHALL COME ON AND ALARM HORN SHALL SOUND. IF FILLING CONTINUES TO 95% CAPACITY, A SECOND LIGHT SHALL COME ON AND ALARM HORN SHALL SOUND AGAIN. AT THIS TIME, THE 95% TANK FILL N/O SOLENOID SHALL CLOSE ALLOWING NO MORE FUEL TO ENTER THE TANK.

MAIN TANK SHALL HAVE AN INTERSTITIAL SENSOR INSTALLED IN THE 2" MONITOR PIPE. INTERSTITIAL SENSOR SHALL BE WIRED TO NEW TANK MONITORING SYSTEM. MAGNETOSTRICTIVE PROBE FOR INVENTORY MONITORING SHALL BE WIRED TO TANK MONITORING SYSTEM.

DAY TANK:
SUCTION PUMP AND CONTROLS MOUNTED ON DAY TANK ARE EXISTING TO REMAIN.

RETURN PUMP MOUNTED ON REMOTE PUMPING UNIT SHALL TURN ON WHEN DAY TANK LEVEL IS 1/2" ABOVE SUCTION PUMP SHUT OFF LEVEL. RETURN PUMP SHALL RUN UNTIL DAY TANK LEVEL IS 1/2" ABOVE THE SUCTION PUMP TURN ON LEVEL.

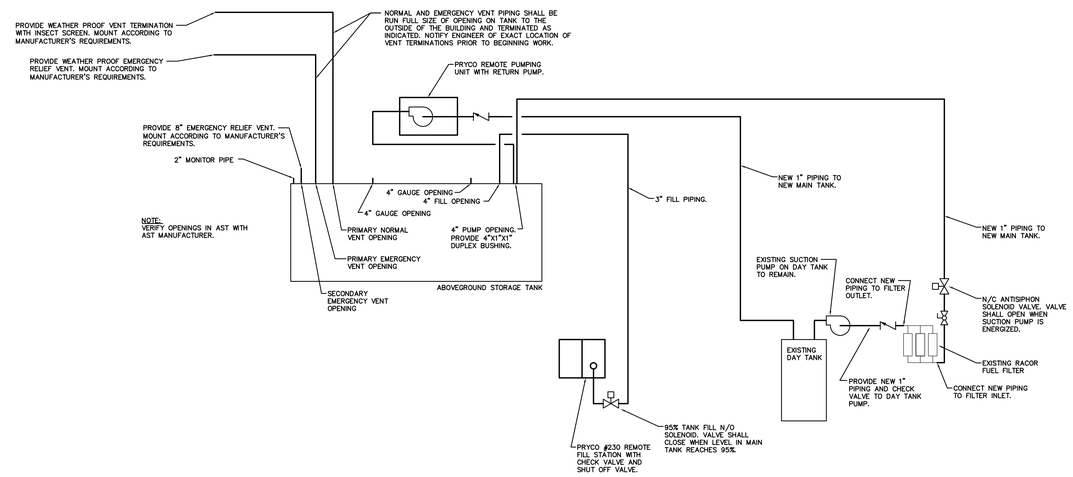

FUEL PIPING SCHEMATIC

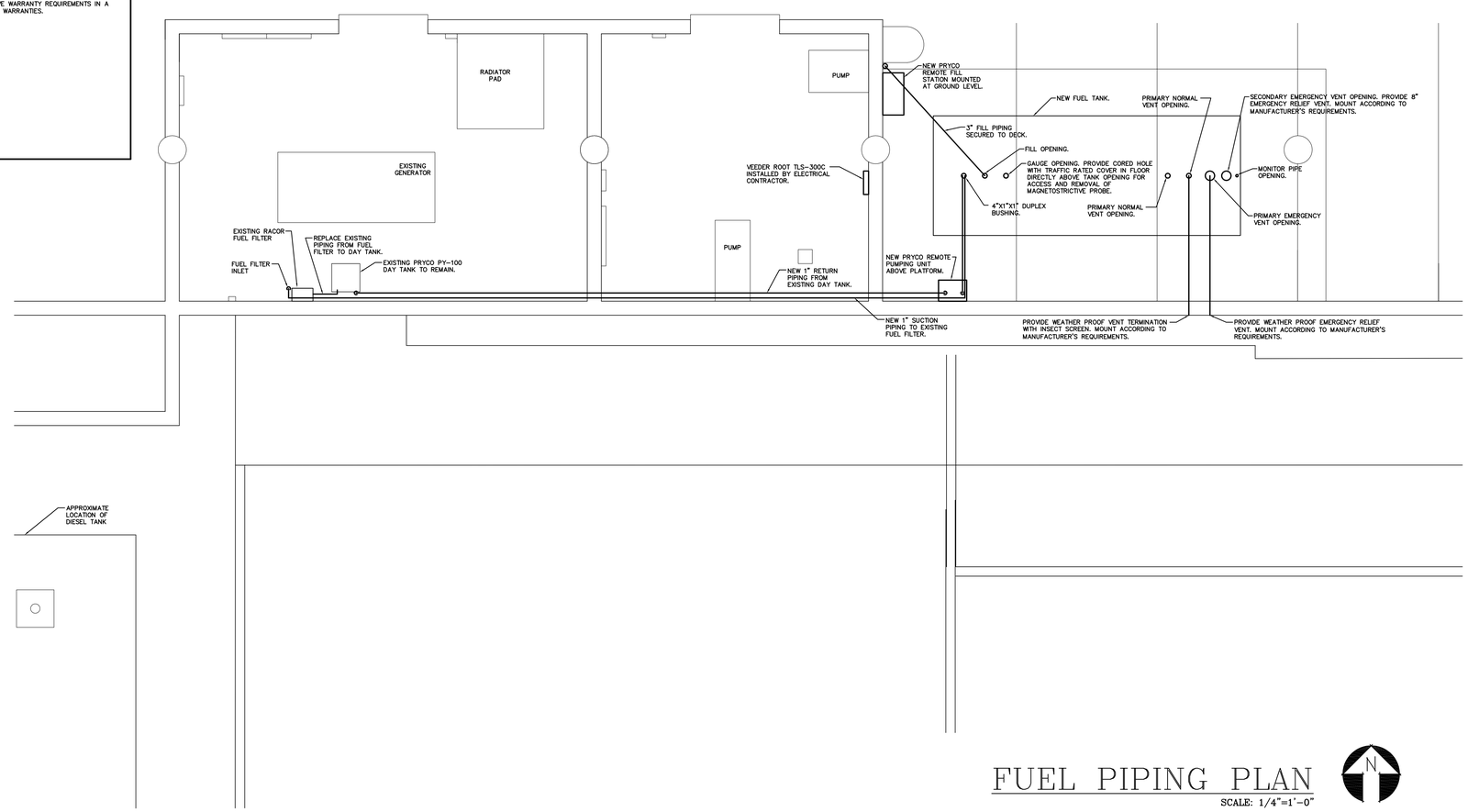

FUEL PIPING PLAN

SCALE: 1/4"=1'–0"

FORNEY ENGINEERING, INC.
MECHANICAL & ELECTRICAL CONSULTING ENGINEERS
5215 FOURTH AVE. CIRCLE EAST, BRADENTON, FL. 34208 C.O.A. #4049
PHONE (941) 748–5884 FAX (941) 747–6240 E–MAIL fei@forneyengineering.com

COPYRIGHT 2007, FORNEY ENGINEERING, INC. ALL RIGHTS RESERVED

MANATEE COUNTY ADMINISTRATION FUEL TANK
1112 MANATEE AVENUE WEST
BRADENTON, FL 34206

TO THE BEST OF MY KNOWLEDGE, SAID PLANS AND SPECIFICATIONS COMPLY WITH ALL APPLICABLE BUILDING CODES.

BY _____
GERARD L. ABRAMS
47786

DATE: _____

S E A L

REV. #	DATE

JOB NO. : 08-2156
DATE : 5-14-09
DRAWN BY : NJM
CHECKED BY : NJM
SHEET No. :
P–1

ARCHITECTURAL ABBREVIATIONS

A/C	AIR CONDITIONING
AB	ANCHOR BOLT
ABV	ABOVE
AC	ACOUSTICAL
ACC	ACCESS
ACFL	ACCESS FLOOR
ACPL	ACOUSTICAL PLASTER
ACR	ACRYLIC PLASTIC
ACOUST	ACOUSTIC (AL)
ACT	ACOUSTICAL TILE
AD	AREA DRAIN
ADA	AMERICANS WITH DISABILITIES ACT
ADH	ADHESIVE
ADJ	ADJACENT
ADJT	ADJUSTABLE
AFF	ABOVE FINISHED FLOOR
AGG	AGGREGATE
AL	ALUMINUM
ALES	ALUMINUM ENTRY SYSTEM
ALT	ALTERNATE
ALUM	ALUMINUM
ANC	ANCHOR, ANCHORAGE
ANOD	ANODIZED
AOC	AREA OF CONTRACT
AP	ACCESS PANEL
APX	APPROXIMATE
ARCH	ARCHITECT (URAL)
ARCH'L	ARCHITECT (URAL)
ART	ARTICULATION
ASB	ASBESTOS
ASC	ABOVE SUSPENDED CEILING
ASPH	ASPHALT
ASS'Y	ASSEMBLY
AT	ASPHALT TILE
AUTO	AUTOMATIC
BBD	BULLETIN BOARD
BD	BOARD
BEL	BELOW
BET	BETWEEN
BF	BLOCK FILLER
BIT	BITUMINOUS
BJT	BED JOINT
BLDG	BUILDING
BLK	BLOCK
BLKG	BLOCKING
BM	BENCH MARK
BO	BOTTOM OF
BOT	BOTTOM
BP	BACK PLASTER (ED)
BPL	BASE PLATE
BRG	BEARING
BRK	BRICK
BRZ	BRONZE
BS	BOTH SIDES
BSMT	BASEMENT
BUR	BUILT UP ROOFING
BVL	BEVELED
BW	BOTH WAYS
CAB	CABINET
CAD	CADMIUM
CB	CATCH BASIN
CBU	CEMENTITOUS BACKER UNITS
CBW	COLD BOX WALL
CEM	CEMENT
CER	CERAMIC
CFL	COUNTERFLASHING
CFT	CUBIC FOOT
CG	CORNER GUARD
CHAM	CHAMFER
CHBD	CHALKBOARD
CHT	CEILING HEIGHT
CI	CAST IRON
CIPC	CAST IN PLACE CONCRETE
CIR	CIRCLE
CIRC	CIRCUMFERENCE
CJ	CONTROL JOINT
CK	CALK (ING) \ CAULK (ING)
℄	CENTERLINE
CLG	CEILING
CLL	CONTRACT LIMIT LINE
CLR	CLEAR
CLS	CLOSURE
CM	CENTIMETER (S)
CMT	CERAMIC MOSAIC (TILE)
CMU	CONCRETE MASONRY UNIT
CMU-C	CMU W/ MODIFIED CEMENT COVER
CO	CONCRETE OPENING
COL	COLUMN
COMB	COMBINATION
COMP	COMPRESS (ED),(ION),(IBLE)
COMPO	COMPOSITION (COMPOSITE)
CONC	CONCRETE
COND	CONDITION
CONSTR	CONSTRUCTION
CONT	CONTINUOUS OR CONTINUE
CONTR	CONTRACT (OR)
COORD	COORDINATE (TION)
CORR	CORRIDOR
CPR	COPPER
CPT	CARPET (ED)
CR	CHROMIUM (PLATED)
CRG	CROSS GRAIN
CRS	COURSE (S)
CRT	CLEAN ROOM TILE
CS	COUNTERSINK
CSMT	CASEMENT
CST	CAST STONE
CT	CERAMIC TILE
CTR	COUNTER
CTW	CERAMIC TILE WALL
CTSK	COUNTERSUNK SCREW
CX	CONNECTION
CYD	CUBIC YARD
CUH	CABINET UNIT HEATER
D	DRAIN
DA	DOUBLEACTING
DEM	DEMOLISH, DEMOLITION
DEP	DEPRESSED
DF	DRINKING FOUNTAIN
DH	DOUBLE HUNG
DIAG	DIAGONAL
DIA	DIAMETER
DIM	DIMENSION
DIV	DIVISION
DL	DEAD LOAD
DMT	DEMOUNTABLE
DP	DAMPPROOFING
DPR	DAMPER
DR	DOOR
DRB	DRAINBOARD
DS	DOWNSPOUT
DT	DRAIN TILE
DTA	DOVETAIL ANCHOR
DTL	DETAIL
DTS	DOVETAIL ANCHOR SLOT
DW	DUMBWAITER
DWG	DRAWING
DWR	DRAWER
E	EAST
EA	EACH
EB	EXPANSION BOLT
EF	EACH FACE
EL	ELEVATION
ELECT	ELECTRIC (AL)
ELEV	ELEVATOR
EMER	EMERGENCY
EMWPS	EXTERIOR MANUFACTURED WALL PANEL SYSTEM
ENC	ENCLOSE (URE)
ENG	ENGINEER
EP	EPOXY PAINT
EPX/T	EPOXY TERAZZO
EQ	EQUAL
EQP	EQUIPMENT
ESC	ESCALATOR
EST	ESTIMATE
EWC	ELECTRIC WATER COOLER
EXCA	EXCAVATE
EXIST	EXISTING
EXH	EXHAUST
EXMP	EXPANDED METAL PLATE
EXP	EXPOSED
EXS	EXTRA STRONG
EXT	EXTERIOR
FA	FIRE ALARM
FAS	FASTEN, FASTENER
FB	FACE BRICK
FBD	FIBERBOARD
FBO	FURNISHED BY OTHERS
FBRK	FIRE BRICK
FD	FLOOR DRAIN
FE	FIRE EXTINGUISHER
FEB	BRACKETED FIRE EXTINGUISHER
FEC	FIRE EXTINGUISHER CABINET
FF	FINISHED FLOOR
FFE	FINISHED FLOOR ELEVATION
FFL	FINISHED FLOOR LINE
FGL, F	FIBERGLASS
FHMS	FLATHEAD MACHINE SCREW
FHS	FIRE HOSE STATION
FHWS	FLATHEAD WOOD SCREW

FIN	FINISH (ED)
FIXT	FIXTURE
FJT	FLUSH JOINT
FL	FLOOR
FLCO	FLOOR CLEANOUT
FLG	FLASHING
FLR	FLOOR (ING)
FLUR	FLUORESCENT
FLX	FLEXIBLE
FN	FENCE
FND	FOUNDATION
FOC	FACE OF CONCRETE
FOF	FACE OF FINISH
FOM	FACE OF MASONRY
FOS	FACE OF STUDS
FP	FIREPROOF
FPLA	FLOOR PLATE
FR	FRAME (D),(ING)
FRA	FRESH AIR
FRC	FIRE-RESISTANT COATING
FRCG	FIRE RATED CERAMIC GLAZING
FRG	FORGED
FRP	FIBER REINFORCED PLASTIC
FRT	FIRE-RETARDANT
FS	FULL SIZE
FSS	FLAT STEEL SLATS
FTG	FOOTING
FUR	FURRED (ING)
FUT	FUTURE
GA	GAGE, GAUGE
GALV	GALVANIZED
GB	GRAB BAR
GC	GENERAL CONTRACT (OR)
GCMU	GLAZED CONCRETE MASONRY UNITS
GD	GRADE, GRADING
GI	GALVANIZED IRON
GKT	GASKET (ED)
GL	GLASS, GLAZING
GLB	GLASS BLOCK
GLF	GLASS FIBER
GP	GALVANIZED PIPE
GPDW	GYPSUM DRY WALL
GPL	GYPSUM LATH
GPPL	GYPSUM PLASTER
GPT	GYPSUM TILE
GRN	GRANITE
GSS	GALVANIZED STEEL SHEET
GST	GLAZED STRUCTURAL TILE
GT	GROUT
GVL	GRAVEL
GWB	GYPSUM WALL BOARD
GWB-MR	MOISTURE RESISTANT GWB
GWB-WR	WATER RESISTANT GWB
GWB-C	CEMENTITIOUS TILE BACKER BOARD
HB	HOSE BIB
HBD	HARDBOARD
HC	HOLLOW CORE
HD	HEAVY DUTY
HDR	HEADER
HDW	HARDWARE
HES	HIGH EARLY-STRENGTH CEMENT
HF	HEPA FILTERS
HH	HANDHOLE
HJT	HEAD JOINT
HK	HOOK (S)
HM	HOLLOW METAL
HORIZ	HORIZONTAL
HP	HIGH POINT
HR	HOUR
HT	HEIGHT
HTG	HEATING
HVAC	HEATING/VENTILATING/A/C
HWD	HARDWOOD
HWH	HOT WATER HEATER
HX	HEXAGONAL
ID	INSIDE DIAMETER
ILK	INTERLOCK
INCIN	INCINERATOR
INCL	INCLUDE (D),(ING)
INSUL	INSULATE (D),(ION)
INSC	INSULATING CONCRETE
INSF	INSULATING FILL
INT	INTERIOR
INTM	INTERMEDIATE
INV	INVERT
IPS	IRON PIPE SIZE
J	JOIST
JAN CL	JANITOR'S CLOSET
JO	JAMB OPENING
JT	JOINT
JTF	JOINT FILLER
KIT	KITCHEN
KO	KNOCKOUT
KPL	KICKPLATE
L	LENGTH
LAB	LABORATORY
LAD	LADDER
LAM	LAMINATE (D)
LAND'G	LANDING
LAV	LAVATORY
LB	LAG BOLT
LBL	LABEL
LC	LIGHT CONTROL
LH	LEFT HAND
LL	LIVE LOAD
LMS	LIMESTONE
LP	LOW POINT
LPT	LATEX PAINT
LT	LIGHT
LTL	LINTEL
LVR	LOUVER
LW	LIGHTWEIGHT
LWC	LIGHTWEIGHT CONCRETE
M	METER (S)
MAINT	MAINTENANCE
MANUF	MANUFACTURER (ING)
MAS	MASONRY
MAT	MATERIAL
MAX	MAXIMUM
MB	MACHINE BOLT
MBR	MEMBER
MC	MEDICINE CABINET
MECH	MECHANIC (AL)
MED	MEDIUM
MEZZ	equipment platform
MFD	METAL FLOOR DECKING
MFR	MANUFACTURE (ER)
MH	MANHOLE
MI	MALLEABLE IRON
MIC	MULTICOLOR INTERIOR COATING
MIN	MINIMUM
MIR	MIRROR
MISC	MISCELLANEOUS
MLD	MOLDING
MM	MILLIMETER (S)
MMB	MEMBRANE
MO	MASONRY OPENING
MOD	MODULAR
MOV	MOVABLE
MR	MOP RECEPTOR
MRB	MARBLE
MRD	METAL ROOF DECKING
MT	MOUNT (ED),(ING)
MTFR	METAL FURRING
MTHR	METAL THRESHOLD
MTL	METAL
MULL	MULLION
MWK	MILLWORK
N	NORTH
NA	NOT APPLICABLE
NAT	NATURAL
NI	NICKEL
NIC	NOT IN CONTRACT
NL	NAILABLE
NMT	NONMETALLIC
NO	NUMBER
NOM	NOMINAL
NR	NOISE REDUCTION
NPD	NOMINAL PIPE DIAMETER
NRC	NOISE REDUCTION COEFFICIENT
NREP	NON-REINFORCED EPOXY PAINT
NSTOC	NON-SLIP TROWELED ON EPOXY
NTS	NOT TO SCALE
OA	OVERALL
OBS	OBSCURE
OC	ON CENTER (S)
OD	OUTSIDE DIAMETER (DIMENSION)
OF	OUTSIDE FACE
OFD	OVERFLOW DRAIN
OH	OVERHEAD
OHCD	OVERHEAD COILING DOOR
OHMS	OVALHEAD MACHINE SCREW
OHWS	OVALHEAD WOOD SCREW
OJ	OPEN-WEB JOIST
OP	OPAQUE
OPG	OPENING

OPH	OPPOSITE HAND
OPP	OPPOSITE
OPS	OPPOSITE SURFACE
OSA	OPEN TO STRUCTURE ABOVE
P	PAINT
PAR	PARALLEL
PB	PUSH BUTTON
PBD	PARTICLE BOARD
PC	PRECAST CONCRETE (FINISH SCHEDULE ONLY)
PCC	PRECAST CONCRETE
PCF	POUNDS PER CUBIC FOOT
PCPL	CEMENT PLASTER (PORTLAND)
PE	PORCELAIN ENAMEL
PED	PEDESTAL
PERF	PERFORATE (D)
PERI	PERIMETER
PFB	PREFABRICATE (D)
PFL	POUNDS PER LINEAL FOOT
PFN	PREFINISHED
PG	PLATE GLASS
PK	PARKING
PL	PLATE
PLN	PROPERTY LINE
PLAM	PLASTIC LAMINATE
PLAS	PLASTER
PLUMB'G	PLUMBING
PNL	PANEL
PNT	PAINT (ED)
PRESS	PRESSURE
PRF	PREFORMED
PSC	PRESTRESSED CONCRETE
PSF	POUNDS PER SQUARE FOOT
PSI	POUNDS PER SQUARE INCH
PT	POINT, PASS THROUGH
PTC	POST-TENSIONED CONCRETE
PTD	PAPER TOWEL DISPENSER
PTN	PARTITION
PTR	PAPER TOWEL RECEPTOR
PV	PAVE (D),(ING)
PVC	POLYVINYL CHLORIDE
PVMT	PAVEMENT
PLYWD	PLYWOOD
QT	QUARRY TILE
R	RISER
RA	RETURN AIR
RAD	RADIUS
RAF	RAISED ACCESS FLOOR
RB	RUBBER BASE
RBL	RUBBLE STONE
RBT	RABBET, REBATE
RBT	RUBBER TILE
RC	REMOTE CONTROL
RCP	REINFORCED CONCRETE PIPE
RD	ROOF DRAIN
REINF	REINFORCE (D),(ING)
REF	REFERENCE
REFR	REFRIGERATOR
REG	REGISTER
REM	REMOVE
REP	REINFORCED EPOXY PAINT
RES	RESILIENT
RET	RETURN
REV	REVISION (S), REVISED
RF	RESINOUS FLOORING
RFG	ROOFING
RFH	ROOF HATCH
RFL	REFLECT (ED),(IVE),(OR)
RH	RIGHT HAND
RL	RAIL (ING)
RM	ROOM
RO	ROUGH OPENING
ROW	RIGHT OF WAY
RUB MAT	RUBBER MAT
RVS	REVERSE (SIDE)
RVT	RIVET
RWC	RAINWATER CONDUCTOR
S	SOUTH
SAFB	SOUND ATTENUATION FIRE BLANKET
SAF	SAFETY SHOWER
SC	SEALED CONCRETE
SCH	SCHEDULE
SCN	SCREEN
SD	STORM DRAIN
SEC	SECTION
SFGL	SAFETY GLASS
SG	SHEET GLASS
SH	SHELF, SHELVING
SHO	SHORE (D),(ING)
SHT	SHEET
SHTH	SHEATHING
SI	SQUARE INCH
SIM	SIMILAR
SKL	SKYLIGHT
SL	SLEEVE
SNT	SEALANT
SP	SOUNDPROOF
SPC	SPACER
SPEC	SPECIFICATION (S)
SPK	SPEAKER
SPD	SUMP DRAIN
SQ	SQUARE
SSK	SERVICE SINK
SS	STAINLESS STEEL
STL, ST	STEEL
STA	STATION
STD	STANDARD
STG	SEATING
STOR	STORAGE
STR	STRUCTURE (AL)
STRUCT'L	STRUCTURE (AL)
SUBST	SUBSTRATE
SUSP	SUSPENDED
SV	SOLID VINYL SHEET FLOORING
SYM	SYMMETRY (ICAL)
SYN	SYNTHETIC
SYS	SYSTEM
T	TREAD
T&G	TONGUE AND GROOVE
TB	TOWEL BAR
TC	TERRA COTTA
TD	TRENCH DRAIN
TEL	TELEPHONE
TEMP	TEMPERED
TEX	TEXTURE
THK	THICK (NESS)
THR	THRESHOLD
TKBD	TACKBOARD
TKS	TACKSTRIP
TO	TOP OF
TOS	TOP OF STEEL
TOE	TROWELED ON EPOXY
TOL	TOLERANCE
TPD	TOILET PAPER DISPENSER
TPTN	TOILET PARTITION
TR	TRANSOM
TV	TELEVISION
TW	TOP OF WALL
TYP	TYPICAL
TZ	TERRAZZO
UC	UNDERCUT
UNF	UNFINISHED
UNO	UNLESS NOTED OTHERWISE
UR	URINAL
V	VINYL
VAT	VINYL ASBESTOS TILE
VB	VAPOR BARRIER
VB	VINYL BASE
VCB	VINYL COVE BASE
VCT	VINYL COMPOSITE TILE
VERT	VERTICAL
VF	VINYL FABRIC
VG	VERTICAL GRAIN
VIF	VERIFY IN FIELD
VIN	VINYL
VNR	VENEER
VRM	VERMICULITE
VT	VINYL TILE
VWC	VINYL WALL COVERING
W/	WITH
W	WIDTH, WIDE
WB	WOOD BASE
WC	WATER CLOSET
WD	WOOD
WG	WIRED GLASS
WH	WALL HUNG
WHB	WHEEL BUMER
WI	WROUGHT IRON
WDW	WINDOW
WM	WIRE MESH
W/O	WITHOUT
WFOD	WINDOW FRAME O.D.
WP	WATERPROOFING
WP	WORKING POINT
WR	WATER RESISTANT
WS	WATERSTOP
WTW	WALL TO WALL
WWF	WELDED WIRE FABRIC

MANATEE COUNTY ADMINISTRATION: FUEL TANK REPLACEMENT

1112 MANATEE AVENUE WEST, BRADENTON, FLORIDA 34206

- PERMITTING & CONSTRUCTION SET - (05/14/09) -

CONTRACT DOCUMENTS

1.0 DRAWINGS

ARCHITECTURAL

DRAWING NUMBER	DRAWING TITLE	DATE ISSUE 04/15/09	40% PROGRESS SET 05/14/09	PERMITTING & CONSTRUCTION SET
A0.00	COVER SHEET	●	●	
A3.01	FLOOR PLAN, ELEVATIONS, SPECS & DETAILS	●	●	
A5.01	EXTERIOR ELEVATIONS	●		

STRUCTURAL

DRAWING NUMBER	DRAWING TITLE	DATE ISSUE 04/15/09	40% PROGRESS SET 05/14/09	PERMITTING & CONSTRUCTION SET
S1.00	STRUCTURAL NOTES AND DETAILS		●	
S1.1	STRUCTURAL PLANS AND DETAILS	●	●	

MECHANICAL

DRAWING NUMBER	DRAWING TITLE	DATE ISSUE 04/15/09	40% PROGRESS SET 05/14/09	PERMITTING & CONSTRUCTION SET
M-1	EXHAUST PIPING PLAN	●	●	

PLUMBING

DRAWING NUMBER	DRAWING TITLE	DATE ISSUE 04/15/09	40% PROGRESS SET 05/14/09	PERMITTING & CONSTRUCTION SET
P-1	FUEL PIPING PLAN	●	●	
P-2	FUEL PIPING DEMOLITION, NOTES & SPECIFICATIONS	●		

ELECTRICAL

DRAWING NUMBER	DRAWING TITLE	DATE ISSUE 04/15/09	40% PROGRESS SET 05/14/09	PERMITTING & CONSTRUCTION SET
E-1	ELECTRICAL PLAN	●	●	
E-2	ELECTRICAL NOTES & SPECIFICATIONS	●		

FIRE PROTECTION

DRAWING NUMBER	DRAWING TITLE	DATE ISSUE 04/15/09	40% PROGRESS SET 05/14/09	PERMITTING & CONSTRUCTION SET
FP 1.0	SPECIFICATIONS AND DETAILS		●	
FP 2.0	FIRE SPRINKLER PLAN		●	

2.0 BOOKLET SPECIFICATIONS

Refer to specification booklet for updated TOC. These are representative of the specs booklet. Specs are subject to change.

3.0 SEE OWNER/CONTRACTOR CONTRACT

BUILDING CODE SUMMARY

1.0 APPLICABLE CODES

1.01 2007 Florida Building Code
1.02 National Electric Code, 2002 Edition
1.03 Florida Fire Prevention Code.(includes NFPA 1 and NFPA 101) 2004 Edition.
1.04 2007 Florida Mechanical Code, 2nd Edition
1.05 2007 Florida Plumbing Code, 2nd Edition
1.06 NFPA 13, 2002 Edition – Installation of Fire Sprinkler System
1.06 NFPA 70, 2008 Edition – National Electrical Code
1.07 NFPA 10, 2007 Edition – Portable Fire Extinguishers
1.08 NFPA 101, 2009 Edition – Life Safety Code
1.09 NFPA 30, 2008 Edition – Flammable and Combustible Liquids Code
1.10 Local Codes for Manatee County

2.0 USE OR OCCUPANCY CLASSIFICATION

2.01 Section 308, Group H – Hazard Occupancy
Subclassification H2: Buildings or parts thereof used for the manufacturing, processing generation of storage of materials which present a deflagration hazard or a hazard from accelerated burning. Deflagration hazards include Class I, II and III–A flammable of combustible liquids in open containers of containers pressurized at more than 15 psi, combustible dusts stored in piles or within open containers, Class 3 liquid and solid oxidizers, Class I organic peroxides, solid, liquid and gaseous pyrophorics, class 3 nondetonatable unstable (reactive) materials and flammable cryogenic fluids in excess of the amounts given in Table 308.2B.
Table 308.2B – Exempt Quantities of H2 Materials
Class IIIA – (Diesel)
330 gal – in sprinklered building, not in a cabinet
990 gal – in sprinklered building, within a cabinet
2.02 Section 312, Group S – Storage Occupancy
S2 Low Hazard Storage – Parking Garages
2.03 Section 303, Mixed Occupancy – A building that is used for two or more occupancies, classified within different occupancy groups, shall be considered a mixed occupancy building.
2.04 Occupancy Separation – Per Table 302.3.2 Occupancies H–2 and S–2 shall be separated by a 2–Hour Rated Assembly. A 2–Hour UL Rated Fireguard Storage Tank shall be used.

3.0 GENERAL BUILDING LIMITATIONS
3.01 Table 503 Height and Area Group H–2, Type IIB
Unprotected, fully sprinklered, per Table 503, 7,000 SF is allowed for single story. (520 SF Mezzanine provided)
3.02 Table 406.3.5 Open Parking Garages Areas & Height Group S–2, Type IIB, Unprotected, fully sprinklered, Un–Limited S.F for up to 12–stories.
3.03 Per 503.2.3, the mezzanine shall not be counted as a story when it meets the following requirements: 1) the construction of the mezzanine is consistent with the type of materials and construction – yes; 2) the total SF does not exceed 1/3 of the space it is located in – yes; 3) not required to be open to the room in which they are located, provided the occupant load of the aggregate area of the enclosed space does not exceed 10 – yes.

4.0 TYPES OF CONSTRUCTION
4.01 Type IIB, Unprotected, Fully Sprinklered
4.02 Structural framework shall be noncombustible construction.
4.03 Walls and Partitions: N/A
4.04 Floors shall be of noncombustible materials.

5.0 MEANS OF EGRESS
5.01 Occupancy Load Per Table 1004.1.2

Building:		Per Table 1004.1.2	
Existing Open Parking Garage	275,800 g.s.f.	/ 200	= 1,379
New Storage Tank Mezzanine	520 g.s.f.	/ 300	= 2
Overall Total			= 1,381

5.02 Table 1014.1 Spaces With One Means of Egress: A single means of egress may be provided for H–2 Occupancies provided the Overall Occupant Load does not exceed (3). A single means of egress has been provided per the Occupant Load noted above of (2) for the Mezzanine.

5.03 Occupancy H–2 – Table 1004
a. Maximum travel distance allowed – 100'
b. Dead End Corridors allowed – 20'
5.04 Exit width in corridors shall not be less than 44". 1004.1 Exception (10) 36 inches is acceptable if stair or corridor serves occupant load of less than 50. 44" or more has been provided.
5.05 2 people times .07 equals 1.4" min. wide for egress doors. 36" egress width provided.
5.06 Industrial equipment access stairs – 1007.3.1 Exception 3. Industrial equipment access stairs and landings that serve as a component of means of egress from the involved equipment and do not serve more than 20 people shall be permitted to have a minimum clear width of 22 inches, minimum tread depth of 10 inches, maximum riser height of 9 inches, minimum head room of 6 feet 8 inches, and a maximum height between landings of 12 feet.
5.07 Fire Doors – N/A

7.0 FIRE RESISTIVE STANDARDS
7.01 Section 704.1.2.1
Per Table 302.3.2 Occupancies H–2 and S–2 shall be separated by a 2–Hour Rated Assembly.
A 2–Hour UL Rated Fireguard Storage Tank shall be used.

8.0 INTERIOR FINISHES: N/A

9.0 PORTABLE FIRE EXTINGUISHERS

9.01 In buildings of Group H–2 occupancy: One 4A–Rated Extinguisher to each 11,250 SF of floor area, but not less than one to each path of egress or within a travel distance of 75 feet.

12.0 CHEMICAL STORAGE REQUIREMENTS

12.01 NFPA 30 – 4.3 Design, Construction, and Capacity of Storage Cabinets.
12.02 Section 4.3.1 – Not more than 120 gal of Class I, Class II, Class III and Class IIIA liquids shall be stored in a storage cabinet.
12.03 Section 4.3.2 – Not more than three storage cabinets shall be located in any one fire area.
Exception No.2: In industrial occupancy that is protected by an automatic sprinkler system that is designed and installed in accordance with NFPA 13, Standard for Installation of Sprinkler Systems, the number of cabinets in any one group shall be permitted to be increased to six.
12.04 NFPA 30 – 4.4 Design, Construction, and Operation of Inside Liquid Storage Areas.
12.05 Section 4.4.2.1 – All Storage Areas shall be constructed to meet the specified fire resistance ratings in Table 4.4.2.1.
Inside Rooms – Floor area < 150 sq.ft. – 1Hr. Fire Resistance Rating
Inside Rooms – Floor area > 150 sq.ft. and < 500 sq.ft. – 2hr Fire Resistance Rating
12.06 Section 5.5.4.1 – The aggregate of the sum of all incidental operations in each single fire area shall not exceed the sum of the following:
1. 25 gal of Class 1A liquids in containers.
2. 120 gal of Class 1B, Class 1C, Class II, or Class III liquids in containers
3. Two portable tanks each not exceeding 660 gal of class IB, Class IC Class II or Class IIA liquids.
4. 20 portable tanks each not exceeding 660 gal of Class IIIB Liquids.

13.0 LAB DESIGNATIONS: N/A

14.0 ASSUMED FINISHED FLOOR HGT.

14.01 THE FINISHED FLOOR HEIGHT OF THE GROUND LEVEL PLAN IS ASSUMED AT AN ELEVATION OF 100.0' FOR THE SAKE OF CONSISTENCY THROUGHOUT THE CONSTRUCTION DRAWINGS.

PERMITTING & CONSTRUCTION SET

SEAL

05/14/09

J. Anthony Huggins
FL Lic. No. AR-9456

JAHarchitects, LLC

1121 E Twiggs Street
Suite 200
Tampa, Florida 33602
FL Architectural License No. AA26001219
NC Architectural License No. 51951

813.223.2725 phone
813.223.2722 fax
www.JAHarchitectsllc.com

THESE CONSTRUCTION DOCUMENTS HAVE BEEN PREPARED BY A LICENSED ARCHITECT AND ARE INTENDED TO BE IMPLEMENTED BY A LICENSED GENERAL CONTRACTOR. THEY ARE PREPARED TO WORK IN UNISON WITH THE WRITTEN SPECIFICATION, SCHEDULED TESTING, PROJECT MANAGEMENT AS OUTLINED IN THE SPECIFICATION, MOCK-UPS, PRE INSTALLATION CONFERENCES, SHOP DRAWINGS, RFI'S, AND PROFFESSIONAL COMMUNICATIONS BETWEEN THE ARCHITECT & G.C.. THE USE OF THESE DOCUMENTS, INCONSISTENT WITH THIS INTENT, AND THE ARCHITECT NOT PROVIDING CONSTRUCTION ADMINISTRATION SERVICES MAY RESULT IN COST OVER RUNS, SCHEDULE DELAYS, INFERIOR BUILT SOLUTIONS, INCONSISTENT WITH THE ORIGINAL INTENT, AND MAYBE HARMFUL TO THE HEALTH SAFETY & WAREFARE OF THE PUBLIC.

REVISION	DATE	DESCRIPTION	BY
–	04/15/09	40% PROGRESS SET	RE
–	05/14/09	PERMITTING & CONSTRUCTION SET	RE

VICINITY MAP

NORTH

KEY PLAN

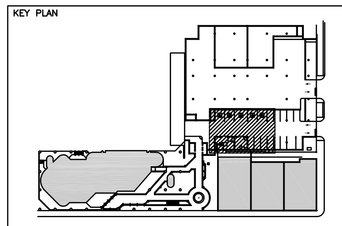

CONFIDENTIAL

THE INFORMATION CONTAINED HEREIN MAY NOT BE USED OR REPRODUCED IN ANY MANNER WITHOUT WRITTEN PERMISSION OF JAHarchitects, LLC.

CLIENT

MANATEE COUNTY ADMINISTRATION FUEL TANK REPLACEMENT

DRAWING TITLE

COVER SHEET

ENGINEER	ARCHITECT	DESIGNER
–	TH	JRM
DRAWN BY	REVIEWED BY	SCALE
JRM	TH	NONE

RECORDS CONTROL

JAH # 153
CADD FILE # A000
XREF FILE(S) TTL XRC –

DRAWING NUMBER

A0.00

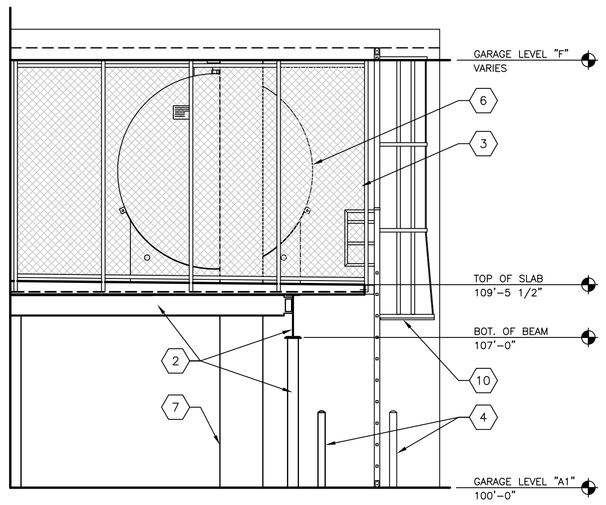

1 A3.01 SIDE ELEVATION - MEZZANINE

SCALE: 1/4" = 1' - 0"

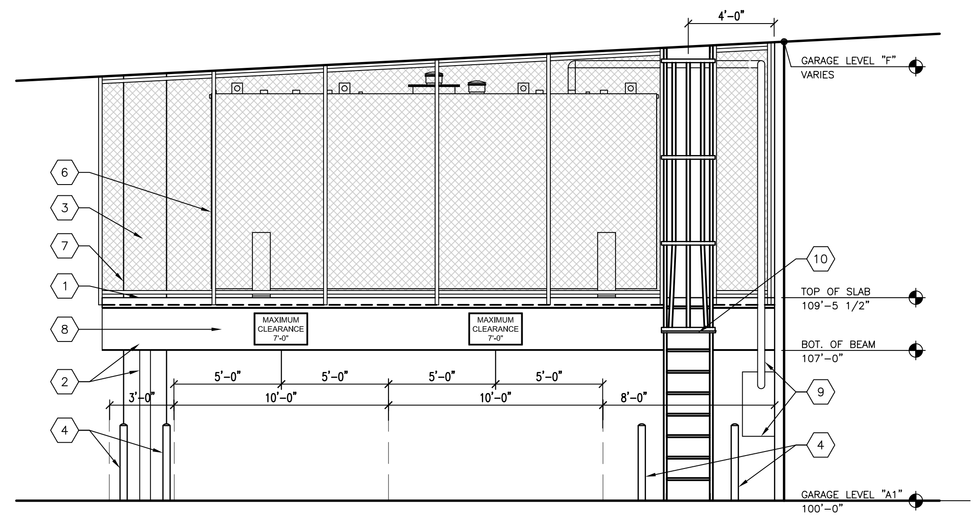

2 A3.01 FRONT ELEVATION - MEZZANINE

SCALE: 1/4" = 1' - 0"

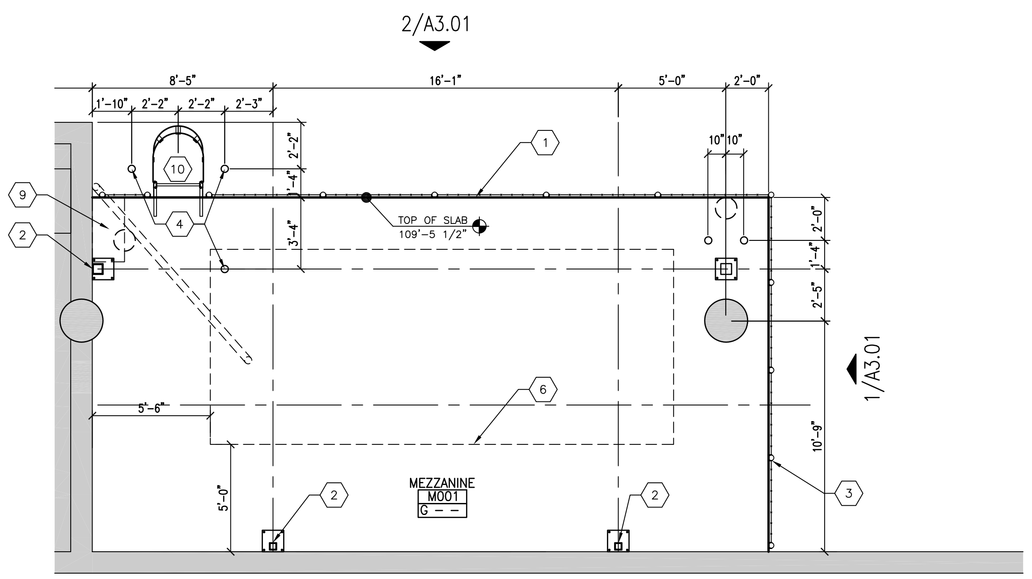

A A3.01 FLOOR PLAN - FUEL TANK MEZZANINE

SCALE: 1/4" = 1' - 0"

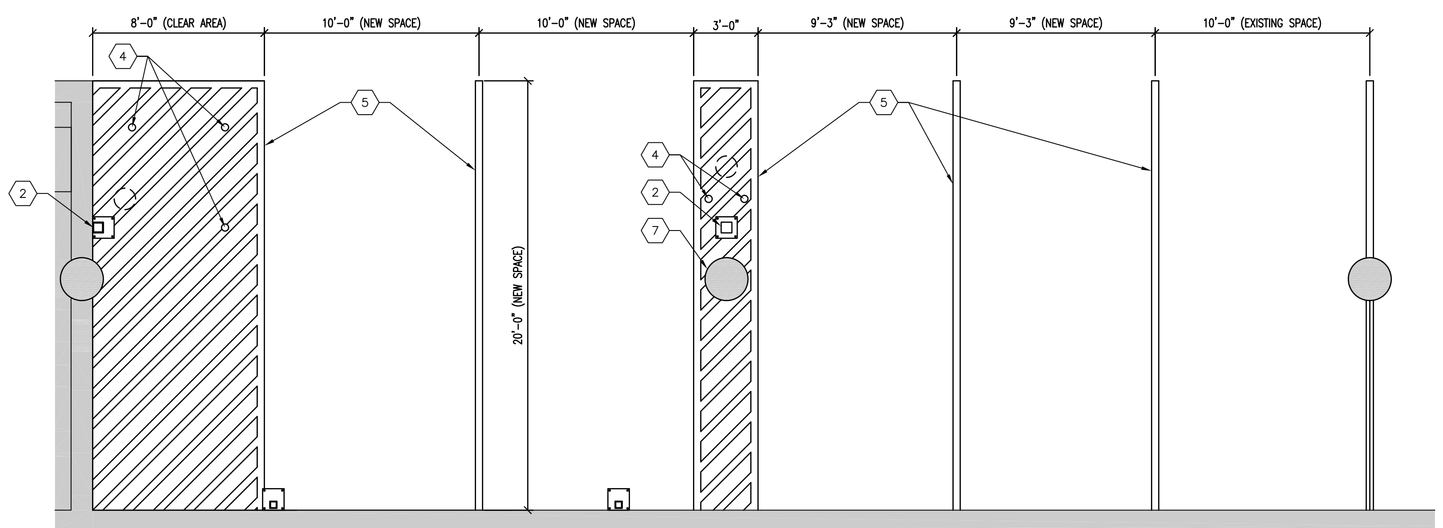

B A3.01 RE-STRIPING PLAN

SCALE: 1/4" = 1' - 0"

SECTION 01732 SELECTIVE DEMOLITION

GENERAL
DEMOLISH EXISTING CONSTRUCTION AS REQUIRED TO PERFORM THE WORK SHOWN ON THE DRAWINGS. DO ALL WORK IN A NEAT AND WORKMANLIKE MANNER. ALL CUTTING TO BE DONE IN SUCH A MANNER TO CREATE STRAIGHT LINE WITH SHARP EDGES; I.E. SAWCUT CONCRETE AND MASONRY, DO NOT CUT STEEL WITH A TORCH, ETC.
SCHEDULE AND COORDINATE DEMOLITION WORK. REMOVE MATERIALS FROM SITE AND DISPOSE OF PROPERLY AND IN A LEGAL MANNER.

PATCHING
PATCH EXISTING SURFACES DAMAGED DURING CONSTRUCTION. REPAIR, REPLACE, AND/OR REFINISH TO MATCH ADJACENT CONSTRUCTION AND FINISHES. THE JUNCTURE BETWEEN PATCHED AND ADJACENT SURFACES SHALL NOT BE VISIBLE. THE ARCHITECT SHALL BE THE FINAL ARBITOR OF ACCEPTABILITY OF THE WORK.

SECTION 05500 METAL FABRICATIONS

GENERAL

PROVIDE MISCELLANEOUS METAL AS SHOWN ON THE DRAWINGS, INCLUDING,BUT NOT LIMITED TO LADDERS, HANDRAILS AND GUARDRAILS, LOOSE BEARING AND LEVELING PLATES, MISCELLANEOUS FRAMING FOR SUSPENDED TOILET PARTITIONS, ELEVATOR HOISTWAY BEAM, LOADING DOCK LEVELER EDGE ANGLES, PIPE GUARDS AND BOLLARDS, AND ELSEWHERE AS REQUIRED FOR THE WORK.

SUBMITTALS

SUBMIT CALCULATIONS SEALED BY A PROFESSIONAL ENGINEER, PRODUCT DATA AND SHOP DRAWINGS DETAILING FABRICATION AND INSTALLATION.
SUBMIT WELDING CERTIFICATES SIGNED BY CONTRACTOR INDICATING WELDERS COMPLY WITH AWS REQUIREMENTS.

PRODUCTS
STRUCTURAL STEEL BEAMS AND COLUMNS: SEE STRUCTURAL DRAWINGS
STEEL PLATES, SHAPES AND BARS: ASTM A36
STEEL PIPE: ASTM A53
NUTS, BOLTS, WASHERS: ASTM A563 GRADE A, ASTM A 307, AND ASME B18.2.1
GALVANIZE PER ASTM 090 WHERE SHOWN AND WHERE IN CONTACT WITH GROUND
WELDING: PER AWS; QUALIFY PROCEDURES AND PERSONNEL PER AWS D1.1
LADDERS: ANSI A14.3 LADDERS SHALL BE PAINTED PER PAINT SPECIFICATION
LADDER RUNGS TO BE PERMANENTLY NON-SLIP
GROUT: NON-METALIC, NON-SHRINK ASTM C1107

DESIGN PERFORMANCE

DESIGN HANDRAIL AND GUARDRAIL STRUCTURAL PERFORMANCE PER ASTM E985, TESTED PER ASTM E894 AND E935; OSHA; AND OTHER APPLICABLE CODES AND STANDARDS; FOR COMMERCIAL/INDUSTRIAL APPLICATIONS.
ALLOW FOR THERMAL MOVEMENT TO PREVENT BUCKLING, JOINT AND MEMBER OVERSTRESSING, OR OTHER DELETERIOUS EFFECTS FOR AN AMBIENT TEMPERATURE RANGE OF 120° F.
MINIMUM SIZE AND MAXIMUM SPACING SHALL BE AS SHOWN ON THE DRAWINGS.

FINISHES

CLEAN UNPRIMED FERROUS METAL PRIOR TO FINISHING PER SSPC-SP6 (EXTERIOR) AND SSPC-SP3 (INTERIOR).
IMMEDIATELY AFTER CLEANING, PRIME WITH MANUFACTURER'S STANDARD UNIVERSAL METAL MODIFIED-ALKYD PRIMER, FS TT-P-664
IMMEDIATELY AFTER ERECTION, CLEAN AND TOUCH UP PAINT AT WELDS, BOLTED CONNECTIONS, AND ABRADED AND DAMAGED AREAS. COMPLY WITH SSPC-PA 1 FOR PAINTED SURFACES AND ASTM A780 FOR GALVANIZED SURFACES.
FINISH PAINT IN ACCORDANCE WITH SECTION 09900 "PAINTING".

SECTION 07900 SEALANTS

GENERAL

PROVIDE SEALANTS WHERE SHOWN ON THE DRAWINGS AND AT ALL HORIZONTAL AND VERTICAL JOINTS BETWEEN SIMILAR AND DISIMILAR MATERIALS, INCLUDING, BUT NOT LIMITED TO:
- PERIMETER OF DOORS AND FRAMES
- CONTROL AND EXPANSION JOINTS IN FLOORS, WALLS, AND CEILINGS
- BETWEEN EXISTING AND NEW CONSTRUCTION
- PERIMETER OF ALL WALLS CONTAINING ACOUSTIC BLANKETS
- WALL PERIMETERS AND PENETRATIONS
- WHERE RECOMMENDED BY OTHER MATERIAL SUPPLIERS

SUBMITTALS

SUBMIT MANUFACTURER'S PRODUCT DATA, INSTALLATION INSTRUCTIONS, AND COLOR SAMPLES SHOWING FULL RANGE OF AVAILABLE COLORS.

PRODUCTS

PROVIDE SEALANTS RECOMMENDED BY THE MANUFACTURER FOR THE INTENDED PURPOSE
COMPLY WITH ASTM C920
COLORS SHALL BE CHOSEN BY THE OWNER FROM THE FULL RANGE OF AVAILABLE COLORS

FOR GENERAL USE, EXCEPT AS NOTED BELOW:
- ONE PART, NON-ACID CURING SILICONE SEALANT
  "864" OR "895" BY PECORA

FOR SANITARY APPLICATIONS:
- ONE PART, MILDEW RESISTANT SILICONE
  "863" BY PECORA

FOR PAINTABLE APPLICATIONS:
- "TRADE MATE PAINTABLE" BY DOW CORNING

FOR HORIZONTAL TRAFFIC JOINTS:
- "DYNATRED" TWO PART URETHANE BY PECORA

FOR ACOUSTICAL JOINTS:
- "AC-20" BY PECORA

FOR JOINTS IN SUBSTRATES FURNISHED BY A SINGLE MANUFACTURER, PROVIDE SEALANTS RECOMMENDED BY THE SYSTEM MANUFACTURER.

PROVIDE CLEANERS, PRIMERS, BACKERS, BOND BREAKERS, AND OTHER ACCESSORIES AS RECOMMENDED BY THE SEALANT MANUFACTURER.

EXECUTION
INSTALL SEALANTS IN ACCORDANCE WITH MANUFACTURER'S WRITTEN INSTRUCTIONS AND ASTM C1193.
DO NOT INSTALL SEALANTS ON SUBSTRATES THAT ARE DAMP OR CONTAIN IMPURITIES THAT COULD REDUCE ADHESION.
INSTALL SEALANTS WHEN THE AMBIENT TEMPERATURE IS ABOVE 50°F AND BELOW 90°F.
INSTALL SEALANT ACCESSORIES INCLUDING BOND BREAKER TAPE AND FOAM BACKER ROD.
TOOL ALL JOINTS CONCAVE EXCEPT:
- EXPOSED JOINTS IN CLEAN ROOMS, USE FLUSH TOOLED JOINTS WHERE FINISHED SURFACES ARE CO-PLANER

SECTION 09900 PAINTING

GENERAL

FIELD PAINTING OF ALL UNFINISHED EXPOSED SURFACES AND TOUCH-UP OF FINISHED, DAMAGED SURFACES; FOR ALL TRADES INCLUDING MECHANICAL, ELECTRICAL, AND PIPING. INCLUDE SURFACE PREPARATION, PRIMING, COORDINATION OF PRIME AND FINISH COATS, AND FINISH PAINTING.

SUBMITTALS

SUBMIT PRODUCT DATA, MSDS SHEETS, APPLICATION INSTRUCTIONS, COLOR CHARTS FOR INITIAL COLOR SELECTION, COLOR CHIPS FOR FINAL SELECTION, AND CLEANING AND MAINTENANCE RECOMENDATIONS.

PRODUCTS

PROVIDE COMMERCIAL QUALITY, PROFESSIONALLY APPLIED PRODUCTS.
COMPLY WITH VOC AND ENVIRONMENTAL REGULATIONS.
COMPLY WITH SSPC GUIDES AND STANDARDS.
DESIGN BASIS: SHERWIN-WILLIAMS

EXTERIOR PAINT SCHEDULE:
FERROUS METALS:
- PRIMER: KEM KROMIK, 3 MILS.
- FINISH: TWO COATS INDUSTRIAL ENAMEL, B-54, 2 MILS EACH COAT

GALVANIZED:
- PRIMER: GALVITE HS PAINT, B50WZ3, 2 MILS
- FINISH: TWO COATS INDUSTRIAL ENAMEL, B-54, 2 MILS EACH COAT

EXECUTION
REMOVE HARDWARE, PLATES, AND ALL ITEMS NOT TO BE PAINTED. REINSTALL AFTER COMPLETION OF PAINTING.

CLEAN AND PREPARE SURFACES ACCORDING TO MANUFACTURER'S INSTRUCTIONS AND THE RECOMMENDATIONS OF SSPC.
- BLAST UNPRIMED STEEL PER SSPC-SP10. HAND TOOL CLEAN AND TOUCH UP PRIMED STEEL.

VERIFY COMPATIBILITY OF PRIMERS AND FINISH COATS.
PAINT TOPS, BOTTOMS, AND EDGES OF DOORS TO MATCH FACES.
IMMEDIATELY PRIOR TO FINAL INSPECTION, TOUCH UP ALL PAINTED SURFACES.
CLEAN UP AND REMOVE TRASH DAILY.

SECTION 10522 FIRE EXTINGUISHER CABINETS

PROVIDE FIRE EXTINGUISHER CABINETS WHERE SHOWN; LARSEN CAMEO SERIES, MODEL C-2409-SR, SEMI-RECESSED MOUNTING, WITH CLEAR BUBBLE AND SATIN ANODIZED ALUMINUM TRIM.

PROVIDE MANUFACTURER'S STANDARD HOOK-TYPE BRACKET WHERE SHOWN.

PROVIDE FIRE EXTINGUISHER AT EACH CABINET AND BRACKET; 10 LB. NOMINAL CAPACITY DRY CHEMICAL TYPE WITH UL 4A:60BC RATING; LARSEN MODEL MP-10.

SECTION 10605 WIRE MESH PARTITIONS

PROVIDE HEAVY DUTY WIRE MESH PARTITIONS WHERE SHOWN, INCLUDING DOORS, WINDOWS, AND SUPPLEMENTAL BRACING. MATCH ACORN 130AL.

SUBMIT COLOR CHARTS, PRODUCT DATA, AND SHOP DRAWINGS SHOWING LAYOUT, ELEVATIONS, AND DETAILS OF CONSTRUCTION.

WIRE MESH: 1-1/2"x2" DIAMOND MESH, MINIMUM 10 GAGE WIRE, ASTM E437.
FRAMING: 1-1/4"x3/4" CHANNELS.
POSTS: 3-1/2"x5/16" FLAT BAR
TOP CAP: 3"x4.1 LB/FT CHANNEL
PROVIDE CHANNEL FRAMING AT HEAD AND JAMBS OF DOORS.
PASS MESH THRU CENTER BAR. CRIMP MESH TO FRAMING.
FLOOR SOCKETS, DOORS, AND OTHER ACCESSORIES: MANUFACTURER'S STANDARD.
FINISH: MANUFACTURER'S STANDARD BAKED ENAMEL FINISH.

SECURE TO FLOOR AND WALLS; PROVIDE BRACES TO BUILDING FRAMING AT 15'-0" MAXIMUM. PROVIDE SUPPLEMENTAL BRACING AS REQUIRED.

GENERAL PLAN NOTES

1. GENERAL CONTRACTOR TO COORDINATE LOCATION OF ALL EXISTING UNDERGROUND UTILITIES WITH NEW UNDERGROUND CONSTRUCTION AND NOTIFY ARCHITECT OF ANY CONFLICTS PRIOR TO COMMENCEMENT OF CONSTRUCTION.

2. CONTRACTOR IS RESPONSIBLE FOR EXAMINING ALL CONTRACT DOCUMENTS, FIELD CONDITIONS, AND CONFIRMING THAT WORK IS BUILDABLE AS SHOWN BEFORE PROCEEDING WITH CONSTRUCTION. IF THERE ARE ANY QUESTIONS REGARDING THESE OR OTHER COORDINATION ITEMS, THE CONTRACTOR IS RESPONSIBLE FOR OBTAINING CLARIFICATION FROM THE ARCHITECT/ENGINEER PRIOR TO PROCEEDING WITH THE WORK IN QUESTION OR RELATED WORK.

3. ERECT AND MAINTAIN SUITABLE FENCES AND BARRIERS FOR THE DURATION OF THE WORK TO PREVENT TRAFFIC INTO TO THE CONSTRUCTION AREA.

4. THE CONTRACTOR'S WORK PERFORMED UNDER THESE CONTRACT DOCUMENTS SHALL CONFORM TO THE CONTRACT REQUIREMENTS AND SHALL BE FREE OF ANY DEFECTS IN EQUIPMENT, MATERIAL, AND/OR WORKMANSHIP. THIS SHALL ALSO APPLY TO ALL SUBCONTRACTORS AND SUPPLIERS.

5. THE INTENT OF THE DRAWINGS AND SPECIFICATIONS IS TO INCLUDE ALL LABOR, MATERIALS, AND SERVICES NECESSARY FOR THE COMPLETION OF ALL WORK SHOWN, DESCRIBED OR REASONABLY IMPLIED, BUT NOT LIMITED TO THAT EXPLICITLY INDICATED IN THE CONTRACT DOCUMENTS.

6. THE CONTRACTOR SHALL NOTIFY THE ENGINEER IMMEDIATELY OF ANY SPECIFIED MATERIALS OR EQUIPMENT WHICH ARE EITHER UNAVAILABLE OR THAT WILL CAUSE A DELAY IN THE CONSTRUCTION COMPLETION SCHEDULE. THE CONTRACTOR SHALL SUBMIT CONFIRMATIONS OF DELIVERY DATES FOR ORDERS OF MATERIAL AND EQUIPMENT.

7. ANY WORK INSTALLED IN CONFLICT WITH THE CONSTRUCTION DRAWINGS, WITHOUT THE PRIOR APPROVAL OF THE OWNER AND THE ARCHITECT/ENGINEER, SHALL BE CORRECTED AT THE CONTRACTOR'S EXPENSE.

8. INSTALL ALL MANUFACTURED ITEMS, MATERIALS AND EQUIPMENT IN STRICT ACCORDANCE WITH THE MANUFACTURER'S SPECIFICATIONS.

GENERAL FINISH NOTES

ROOM FINISH DESIGNATION IS AS FOLLOWS:

ROOM NAME
XXXX
$C_1V_2P_2$

- FLOOR FINISH
- BASE MATERIAL
- WALL FINISH (WHEN ALL WALLS ARE SAME FINISH)
- FINISH # (WHEN MORE THAN ONE TYPE OF DESIGNATED FINISH IS USED. BEGIN WITH #2)TYP.

WHEN WALL FINISHES OF A ROOM ARE DIFFERENT, WALL DESIGNATION IS USED:

ROOM NAME
XXXX
C_1V_2*
P T T W

- NORTH WALL FINISH
- SOUTH WALL FINISH
- WEST WALL FINISH
- EAST WALL FINISH

NOTE: DIRECTIONS ARE BASED ON PLAN NORTH

Floor Finish

C = CARPET	S = SEALED CONCRETE ASHFORD FORMULA BY CURGERETE CHEMICAL CO. OR EQUAL.
E = RESINOUS EPOXY	V = VCT
G = METAL GRATING	- = NO FINISH
P = PAINTED FLOOR	M = 1/4" DIAMOND PLATE METAL
T = CERAMIC TILE	
W = WOOD	

Base Finish

E = RESINOUS EPOXY	T = CERAMIC TILE
V = VINYL	W = WOOD
	- = NO FINISH

Wall Finish

P = PAINT	T = CERAMIC TILE
E = EPOXY PAINT	F = FRP
S = STAINLESS STEEL	- = NO FINISH

Finish Notes:

1. PAINT ALL BOLLARDS "SAFETY" YELLOW.
2. PPAINT EXPOSED STEEL STRUCTURE INCLUDING, BUT NOT LIMITED TO, COLUMNS, BAR JOISTS AND BEAMS.
3. DO NOT PAINT METAL DECK.
4. PAINT ALL CONC. COLUMN PROTECTION "SAFETY" YELLOW TO MATCH EXISITNG.

KEY NOTES

1. CONCRETE SLAB ON METAL DECKING (SLOPE 1/8" PER FOOT TO FRONT OF SLAB) SEE STRUCTURAL DRAWINGS FOR ADDITIONAL INFORMATION.
2. STRUCTURAL STEEL COLUMN SEE STRUCTURAL DRAWINGS FOR ADDITIONAL INFORMATION.
3. CHAINLINK FENCING TO BOTTOM OF STRUCTURE ABOVE.
4. 4" DIAMETER STEEL BOLLARD EXPANSION BOLTED TO EXISTING PAVEMENT (FILL SOLID WITH CONCRETE AND DOME TOP TO DRAIN.) PAINT BOLLARD "SAFETY YELLOW"
5. NEW 4" WIDE PAINTED PAVEMENT MARKING STRIPE (COLOR: MATCH EXISTING)
6. NEW 8,000 GALLON DOUBLE-WALL FUEL STORAGE TANK.
7. EXISTING COLUMN TO REMAIN.
8. NEW FIBERGLASS VERTICAL CLEARANCE SIGN PANEL - MOUNT TO SIDE OF BEAM, CENTERED ABOVE NEW PARKING SPACES.
9. REMOTE FILLING STATION & ASSOCIATED PIPNG - SEE MECHANICAL DRAWINGS FOR ADDITIONAL INFORMATION.
10. FIXED ALUMINUM ACCESS LADDER W/ CAGE (B.O.D. - MANUFACTURER: OKEEFFE'S - MODEL #532) PROVIDE LOCKABLE ACCESS PANEL AT UNDERSIDE OF CAGE. EXTEND AND SECURE CAGE FROM EXISTING SLAB TO UNDERSIDE OF PARKING STRUCTURE ABOVE W/ HILTI HSA-F M6 ANCHOR (TYP.)

PERMITTING & CONSTRUCTION SET

SEAL
05/14/09
J. Anthony Huggins
FL Lic. No. AR-9456

JAHarchitects, LLC
1121 E Twiggs Street
Suite 200
Tampa, Florida 33602
FL Architectural License No. AA26001219
NC Architectural License No. 51951
813.223.2725 phone
813.223.2722 fax
www.JAHarchitectsllc.com

THESE CONSTRUCTION DOCUMENTS HAVE BEEN PREPARED BY A LICENSED ARCHITECT AND ARE INTENDED TO BE IMPLEMENTED BY A LICENSED GENERAL CONTRACTOR. THEY ARE PREPARED TO WORK IN UNISON WITH THE WRITTEN SPECIFICATION, SCHEDULED TESTING, PROJECT MANAGEMENT AS OUTLINED IN THE SPECIFICATION, MOCK-UPS, PRE INSTALLATION CONFERENCES, SHOP DRAWINGS, RFI'S, AND PROFFESSIONAL COMMUNICATIONS BETWEEN THE ARCHITECT & G.C.. THE USE OF THESE DOCUMENTS, INCONSISTENT WITH THIS INTENT, AND THE ARCHITECT NOT PROVIDING CONSTRUCTION ADMINISTRATION SERVICES MAY RESULT IN COST OVER RUNS, SCHEDULE DELAYS, INFERIOR BUILT SOLUTIONS, INCONSISTENT WITH THE ORIGINAL INTENT, AND MAYBE HARMFUL TO THE HEALTH SAFETY & WAREFARE OF THE PUBLIC.

REVISION	DATE	DESCRIPTION	BY
-	04/15/09	40% PROGRESS SET	RE
-	05/14/09	PERMITTING & CONSTRUCTION SET	RE

KEY PLAN

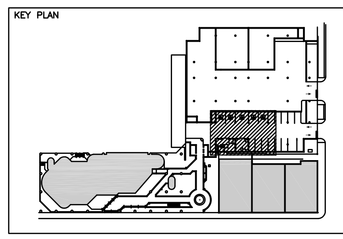

CONFIDENTIAL
THE INFORMATION CONTAINED HEREIN MAY NOT BE USED OR REPRODUCED IN ANY MANNER WITHOUT WRITTEN PERMISSION OF JAHarchitects, LLC.

CLIENT

MANATEE COUNTY ADMINISTRATION
FUEL TANK REPLACEMENT

DRAWING TITLE

FLOOR PLAN, ELEVATIONS, NOTES SPECS & DETAILS

ENGINEER	ARCHITECT	DESIGNER
-	TH	PS
DRAWN BY	REVIEWED BY	SCALE
RH	TH	AS NOTED

RECORDS CONTROL
JAH # 153
CADD FILE # --A301
XREF FILE(S) --TTL - -

DRAWING NUMBER
A3.01

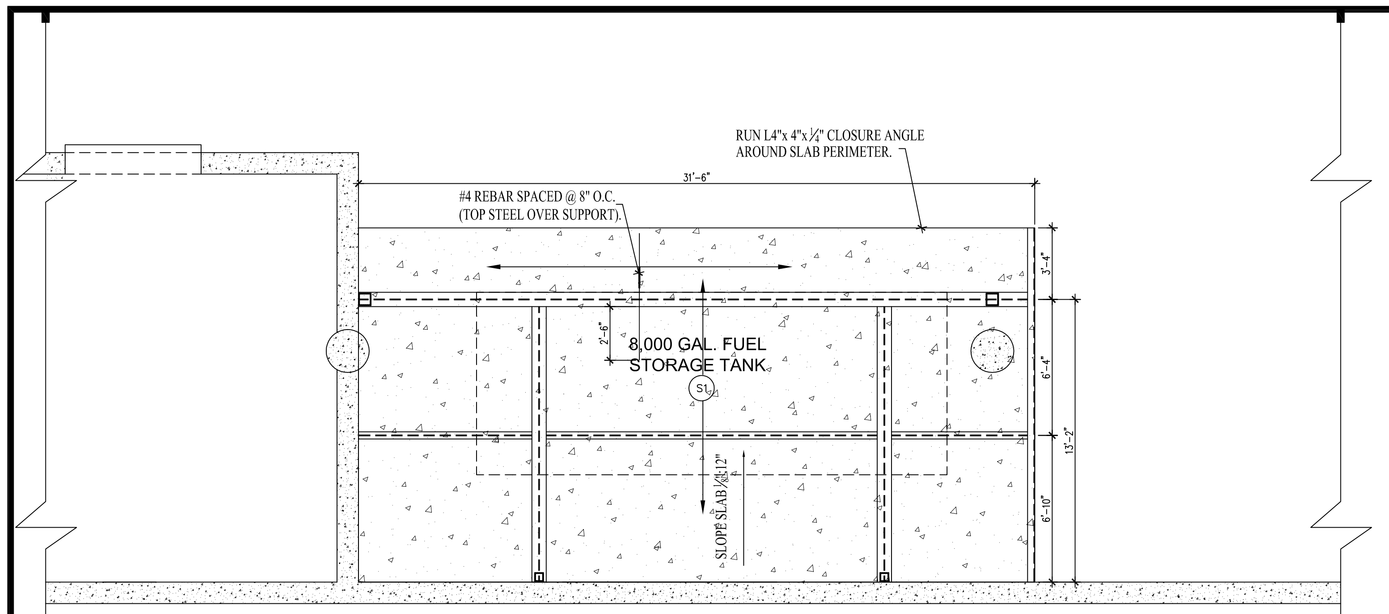

CONCRETE DECK PLAN

SCALE: N.T.S

C

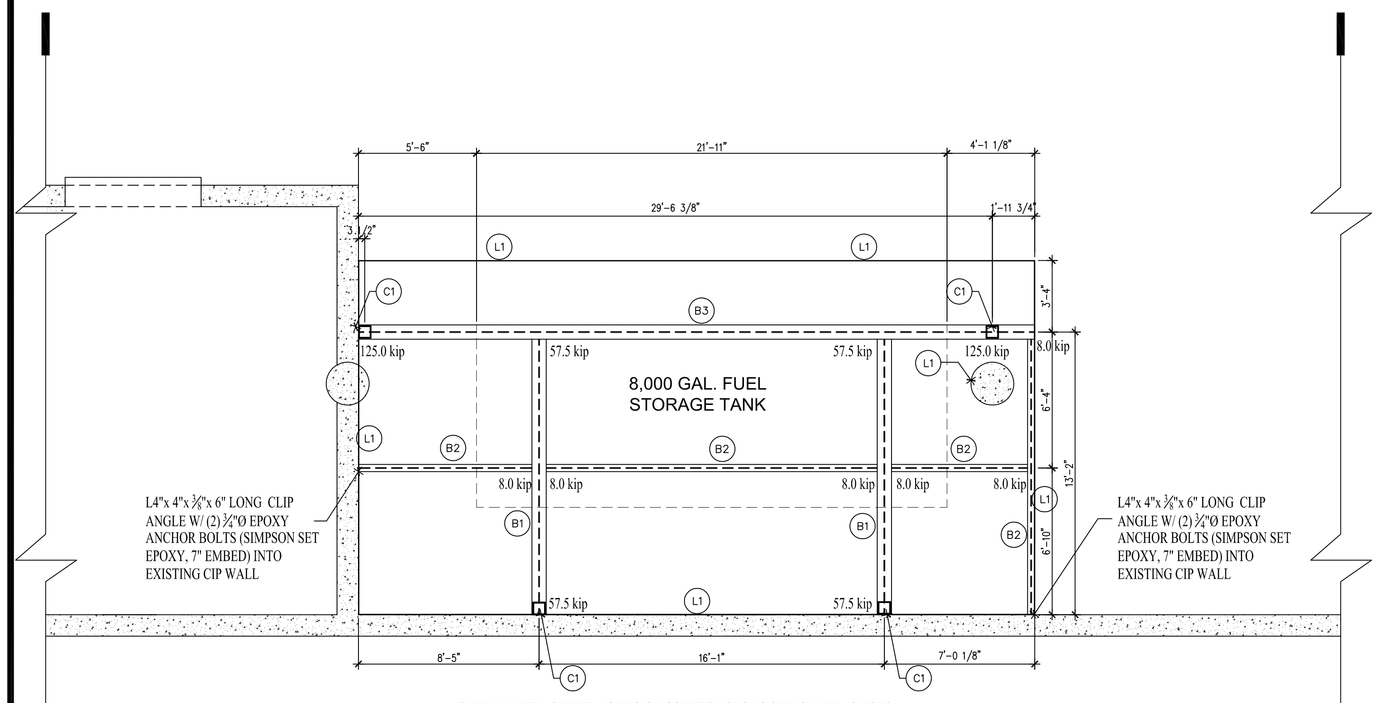

STEEL MANUFACTURER TO DESIGN CONNECTIONS TO SUPPORT REACTIONS LISTED HERE AND SUBMIT SIGNED AND SEALED CALCULATIONS AND SHOP DRAWINGS FOR REVIEW BY ENGINEER OF RECORD.

STEEL FRAMING PLAN

SCALE: N.T.S

B

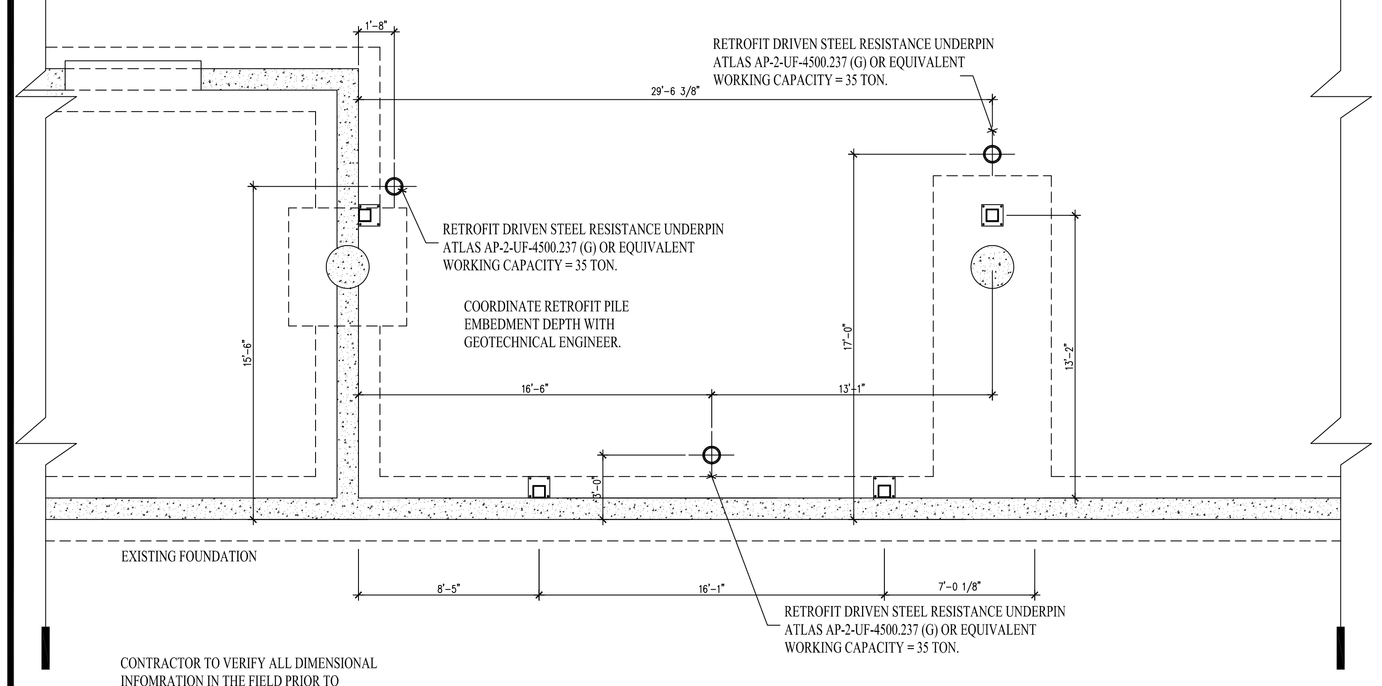

CONTRACTOR TO VERIFY ALL DIMENSIONAL INFOMRATION IN THE FIELD PRIOR TO CONSTRUCTION

FOUNDATION PLAN

SCALE: N.T.S

A

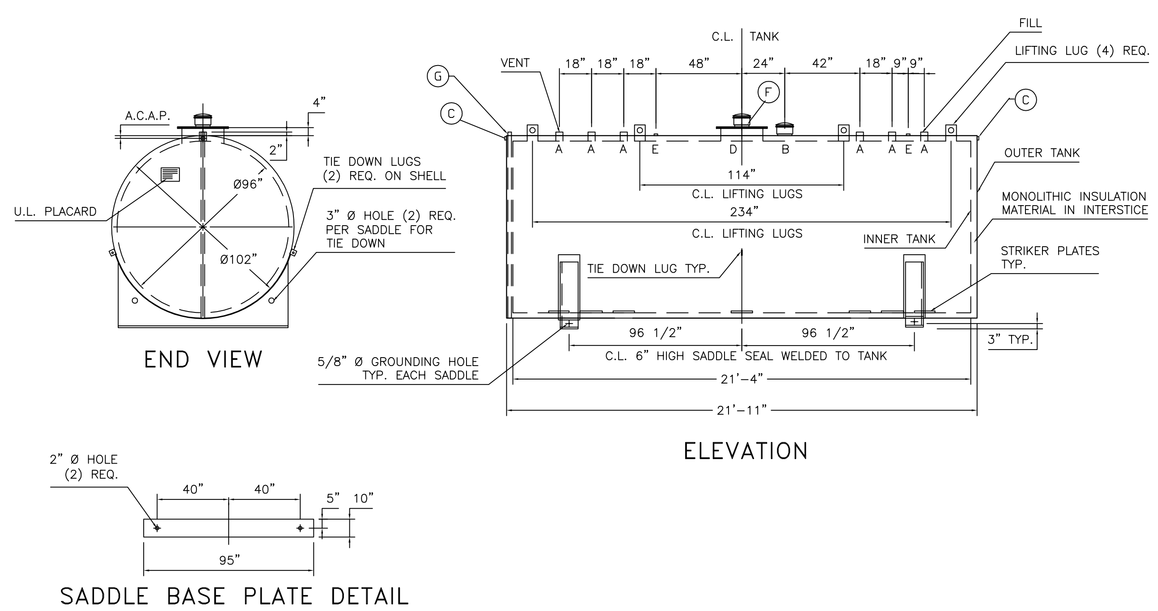

TANK INFORMATION

ALL INFORMATION SHOWN ON THIS DETAIL IS THE RESPONSIBILITY OF THE FUEL TANK MANUFACTURER.

SCALE: N.T.S

D

	STRUCTURAL NOTES
S1	4" THICK CONCRETE SLAB ON 1.5VL18 METAL PAN DECK W/ 6x 6 W1.4W1.4 WWF. 5/8"Ø PUDDLE WELDS & SIDELAP WELDS IN 36/4 PATTERN W/ 5 SIDELAP FASTENERS (TYPE 22) - 1909 LB/FT SHEAR CAPACITY
B1	WF 16x 40 STEEL BEAM. INSTALL AS PER THE CONSTRUCTION DETAILS THIS SHEET.
B2	WF 12x 14 STEEL BEAM. INSTALL AS PER THE CONSTRUCTION DETAILS THIS SHEET.
B3	WF 24x 84 STEEL BEAM. INSTALL AS PER THE CONSTRUCTION DETAILS THIS SHEET.
C1	HSS 6"x 6"x ½" COLUMN W/ 12"x 12"x ½" BASE PLATE W/ (4) ¾"Ø ANCHOR BOLTS @ BASE. ANCHOR TO EXISTING FOUNDATION W/ EPOXY ANCHORS (SIMPSON SET EPOXY, 9" EMBEDMENT)
L1	L4"x 4"x ¼" STEEL CLOSURE ANGLE. ANCHOR TO SUPPORT WALLS W/ ½"Ø EPOXY ANCHORS @ 24" O.C. (SIMPSON SET EPOXY, 6" EMBED).

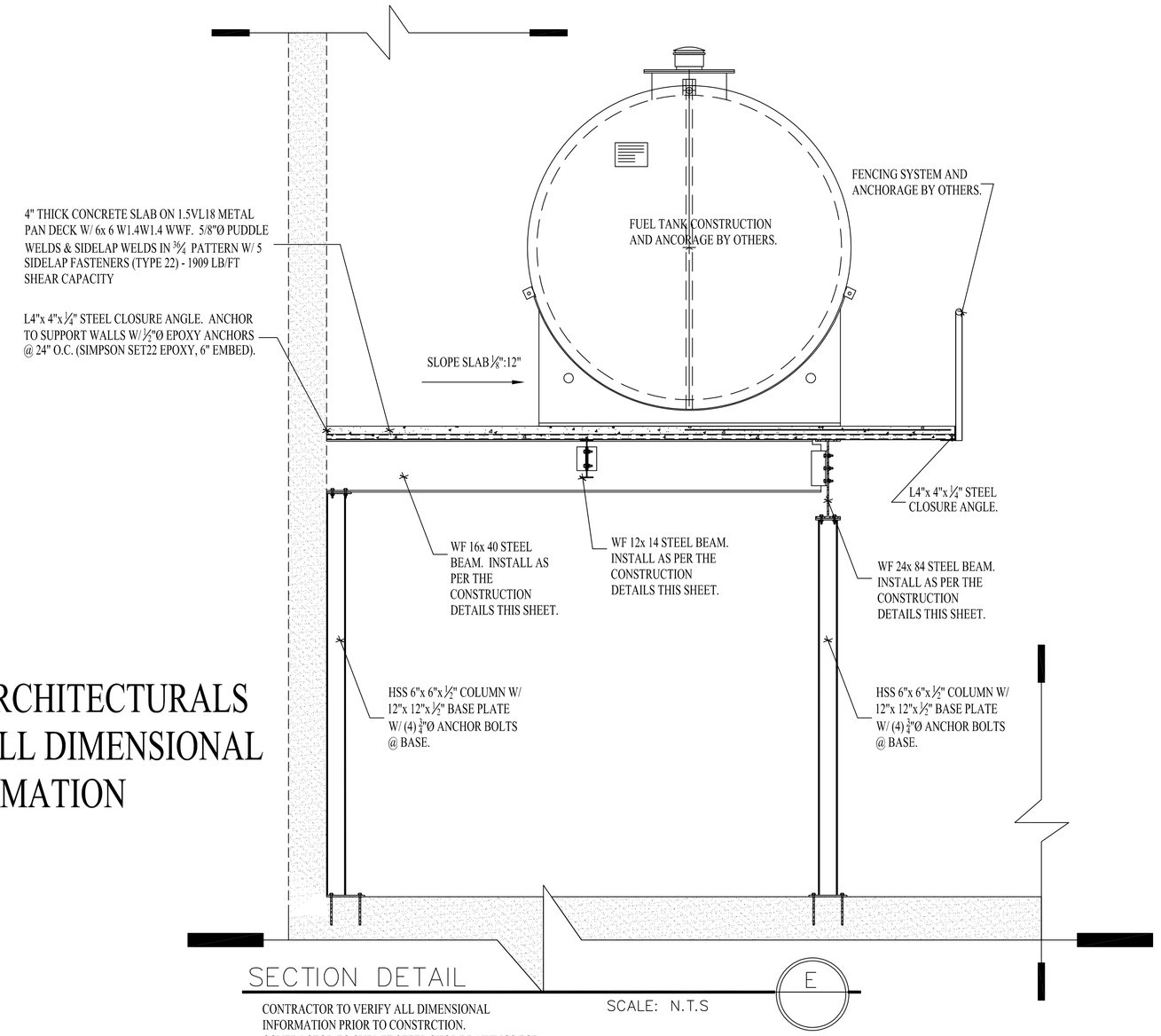

SEE ARCHITECTURALS FOR ALL DIMENSIONAL INFORMATION

SECTION DETAIL

CONTRACTOR TO VERIFY ALL DIMENSIONAL INFORMATION PRIOR TO CONSTRCTION.
CONTRACTOR TO SUBMIT STEEL SHOP DRAWINGS FOR REVIEW AND APPROVAL PRIOR TO CONSTRUCTION.

SCALE: N.T.S

E

The Structures Group, Inc.
Dr. Nick M. Bradford, P.E. S.E. S.I. LEED AP
FL Reg. #52585
1714 N. Armenia Avenue, #B
Tampa, FL 33607
Phone (813)875-3421
EB Fx #8866
Fax (813)875-9320
www.Structures-Group.com

©THESE DRAWINGS ARE THE PROPERTY OF NICK M. BRADFORD, P.E.
ANY REPRODUCTION OR UNAUTHORIZED USE IS PROHIBITED.

NOTE: IT IS THE CONTRACTORS RESPONSIBILITY TO REVIEW ALL DRAWINGS BEFORE CONSTRUCTION BEGINS. THE ENGINEER OF RECORD IS RESPONSIBLE FOR THE STRUCTURAL INTEGRITY OF THIS PROJECT ONLY. ANY DISCREPANCY BETWEEN FIELD CONDITIONS, OTHER DESIGN PROFESSIONALS' SHOP DRAWINGS, CONTRACTORS' BUILDING METHODS, AND THESE SIGNED AND SEALED DRAWINGS MUST BE BROUGHT TO THE ATTENTION OF THE ENGINEER OF RECORD PRIOR TO THE COMMENCEMENT OF CONSTRUCTION.

CONTRACTOR TO VERIFY ALL DIMENSIONS PRIOR TO START OF ANY CONSTRUCTION. THE STRUCTURES GROUP IS NOT RESPONSIBLE FOR ANY DIMENSIONS.

THE STRUCTURES GROUP IS RESPONSIBLE FOR PROPOSED CHANGES TO ORIGINAL STRUCTURE SHOWN ON THESE PAGES ONLY. THE STRUCTURES GROUP IS NOT RESPONSIBLE FOR EXISTING STRUCTURAL COMPONENTS.

Plans and specifications comply with the Florida building code, section 1609 for 130 mph wind zone (2007 edition)

This drawing is valid for 12 months after the date it is signed and sealed or until the requirements of the 2007 edition of the Florida Building Code is changed.

This drawing is signed and sealed for the structural portions of the drawing only. Architectural, electrical, or mechanical details, if shown, are for visual reference only and are not covered under this seal.

REV.	DATE & COMMENTS	BY

MANATEE FUEL TANK Center

Florida

JOB NUMBER :	20090097
DATE :	MAY 15, 2009
DRAWN BY :	NMB
SCALE :	

SHEET NUMBER

S1.1

SIGN & SEAL

Dr. Nick M. Bradford, P.E. S.E. S.I.
FL. Reg. #52585

GENERAL NOTES

1.0 GENERAL

1.1 STRUCTURAL WORK SHALL BE IN ACCORDANCE WITH THE FLORIDA BUILDING CODE 2007 AS ADOPTED AND SUPPLEMENTED BY LOCAL REGULATIONS.
1.2 VERIFY ALL DIMENSIONS AND SITE CONDITIONS PRIOR TO STARTING CONSTRUCTION. NOTIFY THE ARCHITECT OF ANY DISCREPANCIES OR INCONSISTENCIES.
1.3 DO NOT SCALE DRAWINGS.
1.4 SEE ARCHITECTURAL, MECHANICAL AND ELECTRICAL DRAWINGS FOR MISCELLANEOUS STEEL ITEMS NOT SHOWN HEREON.
1.5 SEE ARCHITECTURAL, MECHANICAL AND ELECTRICAL DRAWINGS FOR ANCHORED, SUPPORTED AND EMBEDDED ITEMS WHICH AFFECT THE STRUCTURAL WORK. VERIFY DETAILS AND DIMENSIONS WITH EQUIPMENT PURCHASED.
1.6 COORDINATE SIZES AND LOCATIONS OF OPENINGS IN FLOORS AND ROOF WITH ARCHITECTURAL, MECHANICAL, AND ELECTRICAL REQUIREMENTS.
1.7 NO STRUCTURAL MEMBER SHALL BE CUT, NOTCHED OR OTHERWISE ALTERED UNLESS APPROVED IN WRITING BY THE ENGINEER.
1.8 TOP OF SLAB AT GROUND LEVEL REFERENCE EL. 100'-0". SEE SITE PLAN FOR ACTUAL ELEVATION.
1.9 NO CHANGES IN CONSTRUCTION FROM THAT SHOWN IN THE APPROVED SHOP DRAWINGS SHALL BE MADE WITHOUT THE SPECIFIC WRITTEN APPROVAL OF THE ENGINEER.
1.10 SUBMITTALS SHALL CONFORM TO REQUIREMENTS OF CONTRACT DOCUMENTS, AND SHALL BE CHECKED AND MARKED "APPROVED" BY CONTRACTOR PRIOR TO SUBMITTAL. NON-CONFORMING SUBMITTALS WILL BE RETURNED WITHOUT REVIEW.
1.11 SHOP DRAWINGS SHALL NOT BE REPRINTS OF CONTRACT DOCUMENTS.
1.12 THE STRUCTURE IS DESIGNED TO BE SELF-SUPPORTING AND STABLE AFTER THE BUILDING IS COMPLETE. IT IS THE CONTRACTOR'S RESPONSIBILITY TO DETERMINE ERECTION PROCEDURES AND SEQUENCE TO INSURE SAFETY OF THE BUILDING AND ITS COMPONENTS DURING ERECTION. THIS INCLUDES. THE ADDITION OF NECESSARY SHORING, SHEETING, TEMPORARY BRACING, GUYS OR TIEDOWNS.
1.13 DETAILS LABELED "TYPICAL DETAILS" ON THE DRAWINGS SHALL APPLY TO ALL SITUATIONS OCCURRING ON THE PROJECT THAT ARE THE SAME OR SIMILAR TO THOSE SPECIFICALLY DETAILED. THE APPLICABILITY OF THE DETAIL TO ITS LOCATION ON THE PLANS CAN BE DETERMINED BY THE TITLE OF DETAIL. SUCH DETAILS SHALL APPLY WHETHER OR NOT THEY ARE KEYED IN AT EACH LOCATION. QUESTIONS REGARDING APPLICABILITY OF TYPICAL DETAILS SHALL BE DETERMINED BY THE ENGINEER OF RECORD.
1.14 THE GENERAL CONTRACTOR SHALL COMPARE THE ARCHITECTURAL AND STRUCTURAL DRAWINGS AND REPORT ANY DISCREPANCIES BETWEEN EACH SET OF DRAWINGS AND WITHIN EACH SET OF DRAWINGS TO THE ARCHITECT AND ENGINEER OF RECORD PRIOR TO THE FABRICATION AND INSTALLATION OF ANY STRUCTURAL MEMBERS.
1.15DESIGN DATA
1.12.1 LIVE LOADS:
MECHANICAL PLATFORMS — 40 PSF
1.12.2 DEAD LOADS
FUEL TANK — 120,000 LB
1.16 WIND VELOCITY — 130 MPH (I = 1.0), EXP. C, PER FBC 2007 U.O.N.
1.17 ALLOWABLE SOIL PRESSURE — 2500 PSF (ASSUMED)

2.0 FOUNDATIONS

2.1 PREPARE SITE & COMPACT BEARING SOIL IN ACCORDANCE WITH THE GEOTECHNICAL ENGINEERING REPORT. PREPARED SPECIFICALLY FOR THIS PROJECT. ENGINEER ASSUMES NO RESPONSIBILITY FOR SETTLEMENT OR OTHER FOUNDATION ISSUES DUE TO FAILURE OF OWNER OR CONTRACTOR TO PERFORM THE NECESSARY GEOTECHNICAL INVESTIGATION.

3.0 REINFORCING

3.1 SUBMITTALS FOR REVIEW
3.1.1 SHOP DRAWINGS: INDICATE BAR SIZES, SPACINGS, LOCATIONS, AND QUANTITIES OF REINFORCING STEEL AND WIRE FABRIC, BENDING AND CUTTING SCHEDULES, AND SUPPORTING AND SPACING DEVICES.
3.1.2 MANUFACTURER'S CERTIFICATE: CERTIFY THAT PRODUCTS MEET OR EXCEED SPECIFIED REQUIREMENTS.
3.2 PERFORM WORK IN ACCORDANCE WITH CRSI 63 AND MANUAL OF PRACTICE, ACI 301, ACI SP-66 AND ACI 318. MAINTAIN ONE COPY OF EACH DOCUMENT ON SITE.
3.3 REINFORCEMENT
3.3.1 REINFORCING BARS SHALL CONFORM TO ASTM A-615, GRADE 60, LATEST REVISION, WITH SUPPLEMENT (S1), MARKED "S".
3.3.2 STIRRUP STEEL: ASTM A82.
3.3.3 WELDED STEEL WIRE FABRIC: ASTM A185 PLAIN TYPE INSTALL ON BRICKS OR BOLSTERS AT MID-DEPTH OF SLAB.
3.4 ACCESSORIES
3.4.1 TIE WIRE: MINIMUM 16 GAGE ANNEALED TYPES.
3.4.2 CHAIRS, BOLSTERS, BAR SUPPORTS, SPACERS: SIZED AND SHAPED FOR STRENGTH AND SUPPORT OF REINFORCEMENT DURING CONCRETE PLACEMENT CONDITIONS INCLUDING LOAD BEARING PAD ON BOTTOM TO PREVENT VAPOR BARRIER PUNCTURE.
3.5 FABRICATION
3.5.1 FABRICATE CONCRETE REINFORCING IN ACCORDANCE WITH CRSI MANUAL OF STANDARD PRACTICE AND ASTM A184.
3.5.2 LOCATE REINFORCING SPLICES NOT INDICATED ON DRAWINGS, AT POINT OF MINIMUM STRESS. REVIEW LOCATION OF SPLICES WITH ENGINEER. LENGTH OF LAP SPLICES AND BAR EMBEDMENT SHALL BE AS SHOWN IN TABLE, UNLESS OTHERWISE NOTED:

MINIMUM SPLICE LENGTH FOR DEFORMED BARS		3000 PSI		5000 PSI	
		CLASS A	CLASS B	CLASS A	CLASS B
T<12"	#6 OR LESS	44Db	57Db	38Db	49Db
	#7 OR MORE	55Db	71Db	47Db	61Db
T>12"	#6 OR LESS	57Db	74Db	50Db	65Db
	#7 OR MORE	71Db	81Db	61Db	79Db

NOTES:
"T" IS DEPTH OF CONCRETE UNDER BARS
3.5.3 PROVIDE STANDARD HOOKS AT DISCONTINUOUS ENDS OF TOP BARS.
3.5.4 AT CHANGES IN DIRECTION OF CONCRETE WALLS AND TIE BEAMS, PROVIDE CORNER BARS OF SAME SIZE AND SPACING AS HORIZONTAL STEEL.
3.6 PLACEMENT
3.6.1 PLACE, SUPPORT AND SECURE REINFORCEMENT AGAINST DISPLACEMENT. DO NOT DEVIATE FROM REQUIRED POSITION.
3.6.2 DO NOT DISPLACE OR DAMAGE VAPOR BARRIER.
3.6.3 ACCOMMODATE PLACEMENT OF FORMED OPENINGS.
3.6.4 MAINTAIN CONCRETE COVER AS INDICATED ON DESIGN DRAWINGS.
3.6.5 WHERE BEAM REINFORCING IS SHOWN CONTINUOUS, SPLICE BOTTOM BARS OVER SUPPORT AND TOP BARS AT CENTER OF SPAN.
3.6.6 WHERE PIPING PENETRATES CONCRETE BEAMS, PLACE TWO #3 STIRRUPS @ 3" O.C. EACH SIDE OF PIPE, UNLESS OTHERWISE NOTED.

4.0 CIP CONCRETE

4.1 SUBMITTALS FOR REVIEW
4.1.1 PRODUCT DATA: SUBMIT CONCRETE DESIGN MIXES FOR APPROVAL.
4.2 SUBMITTALS AT PROJECT CLOSEOUT
4.2.1 ACCURATELY RECORD ACTUAL LOCATIONS OF EMBEDDED UTILITIES AND COMPONENTS WHICH ARE CONCEALED FROM VIEW.
4.3 QUALITY ASSURANCE
4.3.1 PERFORM WORK IN ACCORDANCE WITH ACI 301.
4.3.2 MAINTAIN ONE COPY OF EACH DOCUMENT ON SITE.
4.3.3 ACQUIRE CEMENT AND AGGREGATE FROM SAME SOURCE FOR ALL WORK.
4.3.4 CONFORM TO ACI 305R WHEN CONCRETING DURING HOT WEATHER.
4.3.5 CONFORM TO ACI 306R WHEN CONCRETING DURING COLD WEATHER.
4.4 CONCRETE MATERIALS
4.4.1 CEMENT: ASTM C150, TYPE II - MODERATE.
4.4.2 FINE AND COARSE AGGREGATES: ASTM C33.
4.4.3 WATER: CLEAN AND NOT DETRIMENTAL TO CONCRETE.
4.5 ADMIXTURES
4.5.1 AIR ENTRAINMENT: ASTM C260.
4.5.2 CHEMICAL: ASTM C494 TYPE A-WATER REDUCING; TYPE B-RETARDING; TYPE C-ACCELERATING; TYPE D-WATER REDUCING AND RETARDING; TYPE E-WATER REDUCING AND ACCELERATING; TYPE F-WATER REDUCING, HIGH RANGE; TYPE G-WATER REDUCING, HIGH RANGE AND RETARDING.
4.5.3 FLY ASH: ASTM C618 CLASS A.
4.6 ACCESSORIES
4.6.1 BONDING AGENT: POLYMER RESIN EMULSION OR POLYVINYL ACETATE.
4.6.2 VAPOR RETARDER: 10 MIL THICK CLEAR POLYETHYLENE FILM TYPE RECOMMENDED FOR BELOW GRADE APPLICATION.
4.6.3 NON-SHRINK GROUT: PREMIXED COMPOUND CONSISTING OF NON-METALLIC AGGREGATE, CEMENT, WATER REDUCING AND PLASTICIZING AGENTS; CAPABLE OF DEVELOPING MINIMUM COMPRESSIVE STRENGTH OF 2,400 PSI IN 48 HOURS AND 7,000 PSI IN 28 DAYS. VIBROPRUF #11, BY LAMBERT CORPORATION OR APPROVED EQUAL.
4.7 CONCRETE MIX
4.7.1 MIX CONCRETE IN ACCORDANCE WITH ACI 304. DELIVER CONCRETE IN ACCORDANCE WITH ASTM C94.
4.7.2 SELECT PROPORTIONS FOR NORMAL WEIGHT CONCRETE IN ACCORDANCE WITH ACI 301. PROVIDE CONCRETE TO THE CRITERIA AS FOLLOWS:

	28 DAY COMP. STRENGTH	SLUMP (+/- 1)	W/C RATIO (MAX.)	MAX. AGGREGATE
FOUNDATIONS	5000 PSI	5"	0.48	3/4"
SLABS ON GRADE	5000 PSI	4"	0.45	3/4"

SUBMIT DESIGN MIXES FOR APPROVAL AT LEAST ONE WEEK PRIOR TO CONCRETE POUR. DESIGN MIX SUBMITTALS MUST INDICATE PROPOSED LOCATION OR TYPE OF USE. FAILURE TO DO SO WILL CAUSE DELAY AND/OR REJECTION OF SUBMITTALS.
4.7.3 USE ACCELERATING ADMIXTURES IN COLD WEATHER ONLY WHEN APPROVED BY ENGINEER. USE OF ADMIXTURES WILL NOT RELAX COLD WEATHER PLACEMENT REQUIREMENTS.
4.7.4 USE OF CALCIUM CHLORIDE PROHIBITED.
4.7.5 USE SET RETARDING ADMIXTURES DURING HOT WEATHER ONLY WHEN APPROVED BY ENGINEER.
4.7.6 ADD AIR ENTRAINING AGENT TO NORMAL WEIGHT CONCRETE MIX FOR WORK EXPOSED TO EXTERIOR.
4.7.7 FLY ASH CONTENT NOT TO EXCEED 20 % OF CEMENTITIOUS MATERIAL BY WEIGHT.
4.8 VERIFY SITE CONDITIONS PRIOR TO PLACING CONCRETE.
4.9 VERIFY REQUIREMENTS FOR CONCRETE COVER OVER REINFORCEMENT.
4.10 PROVIDE CONCRETE COVER OVER REINFORCEMENT AS FOLLOWS, UNLESS OTHERWISE NOTED:

LOCATION AND CONDITION:	MINIMUM COVER:
A. CONCRETE CAST AGAINST AND PERMANENTLY EXPOSED TO EARTH	ALL BARS 3"
B. CONCRETE EXPOSED TO EARTH OR WEATHER	#6 OR GREATER 2"
	#5 OR SMALLER 1-1/2"
C. CONCRETE NOT EXPOSED TO WEATHER OR IN CONTACT WITH GROUND	
1. SLABS, WALLS, AND JOISTS	#11 OR SMALLER 3/4"
	#14-#18 1-1/2"
2. BEAMS AND COLUMNS: (PRIMARY REINFORCEMENT, TIES, STIRRUPS, AND SPIRALS)	ALL BARS 1-1/2"

4.11 VERIFY THAT ANCHORS, SEATS, PLATES, REINFORCEMENT AND OTHER ITEMS TO BE CAST INTO CONCRETE ARE ACCURATELY PLACED, POSITIONED SECURELY, AND WILL NOT CAUSE HARDSHIP IN PLACING CONCRETE.
4.12 PREPARATION
4.12.1 PREPARE PREVIOUSLY PLACED CONCRETE BY CLEANING WITH STEEL BRUSH AND APPLYING BONDING AGENT IN ACCORDANCE WITH MANUFACTURER'S INSTRUCTIONS.
4.12.2 COORDINATE THE PLACEMENT OF JOINT DEVICES WITH ERECTION OF CONCRETE FORMWORK AND PLACEMENT OF FORM ACCESSORIES.
4.13 PLACING CONCRETE
4.13.1 PLACE CONCRETE IN ACCORDANCE WITH ACI 304.
4.13.2 NOTIFY ENGINEER MINIMUM 24 HOURS PRIOR TO COMMENCEMENT OF OPERATIONS TO ALLOW INSPECTION OF FORMWORK, REBAR REPLACEMENT AND CONFORMANCE WITH CONTRACT SPECIFICATIONS. DO NOT CALL FOR INSPECTION UNLESS ALL PREPARATIONS ARE COMPLETE. ENSURE REINFORCEMENT, INSERTS, EMBEDDED PARTS, FORMED EXPANSION AND CONTRACTION JOINTS, AND ARE NOT DISTURBED DURING CONCRETE PLACEMENT.
4.13.3 INSTALL VAPOR RETARDER UNDER INTERIOR SLABS ON GRADE. LAP JOINTS MINIMUM 6 INCHES AND SEAL WATERTIGHT BY TAPING EDGES AND ENDS.
4.13.4 REPAIR VAPOR RETARDER DAMAGED DURING PLACEMENT OF CONCRETE REINFORCING. REPAIR WITH VAPOR RETARDER MATERIAL; LAP OVER DAMAGED AREAS MINIMUM 6 INCHES AND SEAL WATERTIGHT.
4.13.5 MAINTAIN RECORDS OF CONCRETE PLACEMENT. RECORD DATE, LOCATION, QUANTITY, AIR TEMPERATURE, AND TEST SAMPLES TAKEN.
4.13.6 PLACE CONCRETE CONTINUOUSLY BETWEEN PREDETERMINED EXPANSION, CONTROL, AND CONSTRUCTION JOINTS.
4.13.7 DO NOT INTERRUPT SUCCESSIVE PLACEMENT; DO NOT PERMIT COLD JOINTS TO OCCUR.
4.13.8 SCREED SLABS ON GRADE LEVEL, MAINTAINING SURFACE FLATNESS OF MAXIMUM 1/4 INCH IN 10 FT.; PROVIDE FINAL FLOOR FINISH PER REQUIREMENTS SPECIFIED UNDER CONCRETE FINISHING.
4.14 CONCRETE FINISHING
4.14.1 PROVIDE FORMED CONCRETE SURFACES TO BE LEFT EXPOSED CONCRETE WITH SACK RUBBED FINISH.
4.14.2 FINISH CONCRETE FLOOR SURFACES IN ACCORDANCE WITH ACI 301.
4.14.3 WOOD FLOAT SURFACES WHICH WILL RECEIVE CERAMIC TILE WITH FULL BED SETTING SYSTEM. STEEL TROWEL SURFACES WHICH WILL RECEIVE CARPETING, RESILIENT FLOORING OR THIN SET CERAMIC TILE.
4.14.4 STEEL TROWEL SURFACES WHICH ARE SCHEDULED TO BE EXPOSED.
4.14.5 PROVIDE NONSLIP BROOM FINISH TO EXTERIOR CONCRETE SLABS. PLACE FINISH PERPENDICULAR TO TRAFFIC FLOW.
4.14.6 IN AREAS WITH FLOOR DRAINS, MAINTAIN FLOOR ELEVATION AT WALLS; PITCH SURFACES UNIFORMLY AS INDICATED ON DRAWINGS.
4.14.7 FINISH INTERIOR SLABS ON GRADE ACCORDING TO THE FOLLOWING FF/FL METHODS FOR LOCATIONS INDICATED:
4.14.8 SLAB SURFACES TO RECEIVE RESILIENT FLOORING, PAINT, OR OTHER THIN FILM COATING SYSTEM; SPECIFIED OVERALL VALUE, FF 36/FL25; MINIMUM LOCAL VALUE FF30/FL22.
4.14.9 SLAB SURFACES TO RECEIVE CARPET; SPECIFIED OVERALL VALUE FF25/FL20; MINIMUM LOCAL VALUE FF25/FL20.
4.15 CURING AND PROTECTION
4.15.1 IMMEDIATELY AFTER PLACEMENT, PROTECT CONCRETE FROM PREMATURE DRYING, EXCESSIVELY HOT OR COLD TEMPERATURES, AND MECHANICAL INJURY.
4.15.2 MAINTAIN CONCRETE WITH MINIMAL MOISTURE LOSS AT RELATIVELY CONSTANT TEMPERATURE FOR PERIOD NECESSARY FOR HYDRATION OF CEMENT AND HARDENING OF CONCRETE.
4.15.3 CURE FLOOR SURFACES IN ACCORDANCE WITH ACI 308.
4.15.4 PONDING: MAINTAIN 100 PERCENT COVERAGE OF WATER OVER FLOOR SLAB AREAS CONTINUOUSLY FOR 4 DAYS.
4.15.5 SPRAYING: SPRAY WATER OVER FLOOR SLAB AREAS AND MAINTAIN WET FOR 7 DAYS.
4.15.6 MEMBRANE CURING COMPOUND: APPLY CURING COMPOUND TO CONCRETE AS SOON AS FINAL FINISHING OPERATIONS ARE COMPLETE. APPLY ACCORDING TO MANUFACTURER'S RECOMMENDATIONS. USE MEMBRANE CURING COMPOUNDS THAT WILL NOT AFFECT SURFACES TO BE COVERED WITH FINISH MATERIALS APPLIED DIRECTLY TO CONCRETE.
4.15.7 MOISTURE-RETAINING COVER: COVER CONCRETE SURFACES WITH MOISTURE-RETAINING COVER FOR CURING CONCRETE, PLACED IN WIDEST PRACTICAL WIDTH WITH SIDES AND ENDS LAPPED AT LEAST THREE INCHES (3") AND SEALED BY WATERPROOF TAPE OR ADHESIVE. IMMEDIATELY REPAIR ANY HOLES OR TEARS DURING CURING PERIOD USING COVER MATERIAL AND WATERPROOF TAPE.
4.15.8 CURING FORMED SURFACES: CURE FORMED SURFACE, INCLUDING UNDERSIDES OF BEAMS, COLUMNS, SUPPORTED SLABS, AND OTHER SIMILAR SURFACES BY MOIST CURING WITH FORMS IN PLACE FOR FULL CURING PERIOD OR UNTIL FORMS ARE REMOVED. IF FORMS ARE REMOVED, CONTINUE CURING BY MEMBRANE-CURING COMPOUND, MOISTURE-RETAINING COVER; OR WATER SPRAY AND MOISTURE-RETAINING COVER.
4.16 FIELD QUALITY CONTROL
4.16.1 FIELD INSPECTION AND TESTING WILL BE PERFORMED IN ACCORDANCE WITH ACI 301. PROVIDE FREE ACCESS TO WORK AND COOPERATE WITH APPOINTED FIRM.
4.16.2 SUBMIT PROPOSED MIX DESIGN OF EACH CLASS OF CONCRETE TO ENGINEER FOR REVIEW PRIOR TO COMMENCEMENT OF WORK.
4.16.3 TESTS OF CEMENT AND AGGREGATES MAY BE PERFORMED TO ENSURE CONFORMANCE WITH SPECIFIED REQUIREMENTS.
4.16.4 THREE CONCRETE TEST CYLINDERS WILL BE TAKEN FOR EVERY 75 OR LESS CU YDS OF EACH CLASS OF CONCRETE PLACED.
4.16.5 ONE ADDITIONAL TEST CYLINDER WILL BE TAKEN DURING COLD WEATHER CONCRETING, CURED ON JOB SITE UNDER SAME CONDITIONS AS CONCRETE IT REPRESENTS.
4.16.6 ONE SLUMP TEST WILL BE TAKEN FOR EACH SET OF TEST CYLINDERS TAKEN.
4.17 PATCHING
4.17.1 ALLOW ENGINEER TO INSPECT CONCRETE SURFACES IMMEDIATELY UPON REMOVAL OF FORMS.
4.1.2 EXCESSIVE HONEYCOMB OR EMBEDDED DEBRIS IN CONCRETE IS NOT ACCEPTABLE. NOTIFY ENGINEER UPON DISCOVERY.
4.17.3 PATCH IMPERFECTIONS AS DIRECTED.
4.18 DEFECTIVE CONCRETE
4.18.1 DEFECTIVE CONCRETE: CONCRETE NOT CONFORMING TO REQUIRED LINES, DETAILS, DIMENSIONS, TOLERANCES OR SPECIFIED REQUIREMENTS.
4.18.2 REPAIR OR REPLACEMENT OF DEFECTIVE CONCRETE WILL BE DETERMINED BY THE ENGINEER.
4.18.3 DO NOT PATCH, FILL, TOUCH-UP, REPAIR, OR REPLACE EXPOSED CONCRETE EXCEPT UPON EXPRESS DIRECTION OF ENGINEER FOR EACH INDIVIDUAL AREA.
4.19 THE CONTRACTOR, AT HIS OPTION, MAY SUBSTITUTE SYNTHETIC FIBER REINFORCING IN LIEU OF WELDED WIRE FABRIC FOR CONCRETE SLABS ON GRADE. THE SYNTHETIC FIBER REINFORCING SHALL BE ADDED TO THE CONCRETE MIX AT A MINIMUM RATE OF 1.5 LBS OF FIBER PER CUBIC YARD OF CONCRETE, OR AS SPECIFIED BY THE FIBER MANUFACTURER FOR CONTROL OF SHRINKAGE AND TEMPERATURE CRACKING, WHICHEVER IS GREATER. HOWEVER, THE STRUCTURAL ENGINEER WILL NOT BE RESPONSIBLE FOR CRACKING OF ANY SLABS UTILIZING SYNTHETIC FIBERS IN LIEU OF WELDED WIRE FABRIC.

10.0 RETRO-FIT ANCHORS

10.1 ALL POST-INSTALLED ANCHORS SHALL BE EPOXY ADHESIVE TYPE WITH A307 OR A36 THREADED ROD, U.O.N. BRAND AND TYPE OF EPOXY ADHESIVE SHALL BE SIMPSON SET 22 EPOXY. OR HILTI HIT HY 150 EPOXY. NO SUBSTITUTIONS WILL BE ALLOWED WITHOUT WRITTEN PERMISSION FROM THE ENGINEER OF RECORD. EVALUATION OF SUBSTITUTION REQUESTS WILL INVOLVE ADDITIONAL ENGINEERING TIME, AND POSSIBLE REDESIGN OF CONNECTIONS, WHICH WILL AFFECT OTHER TRADES.
10.2 INSTALLATION OF ANCHORS SHALL STRICTLY FOLLOW ALL MANUFACTURER'S WRITTEN SPECIFICATIONS AND RECOMMENDATIONS. ALL DRILLED HOLE PREPARATIONS REQUIRED TO ACHIEVE FULL DESIGN STRENGTH SHALL BE FOLLOWED.
10.3 NO LOAD SHALL BE APPLIED TO EPOXY ANCHORS PRIOR TO FULL CURE TIME SPECIFIED BY MANUFACTURER.
10.4 EMBEDMENT DEPTH OF ANCHORS SHALL BE A MINIMUM AS SPECIFIED ON DRAWINGS; OR IF NOT SHOWN ON DRAWING, EMBED DEPTH SHALL BE AS SPECIFIED BY EPOXY MANUFACTURER TO DEVELOP THE MAXIMUM PUBLISHED BOND STRENGTH.

12.0 STRUCTURAL STEEL

12.1 A CERTIFIED TESTING AGENCY SHALL BE ENGAGED TO PERFORM INDUSTRY STANDARD INSPECTIONS TO ENSURE CONFORMANCE WITH PLANS AND SPECIFICATIONS (IF PROVIDED). SUBMIT REPORTS TO ARCHITECT AND ENGINEER.
12.2 FABRICATE AND ERECT STRUCTURAL STEEL IN CONFORMANCE WITH THE AISC "SPECIFICATIONS" FOR THE DESIGN, FABRICATION AND ERECTION OF STRUCTURAL STEEL BUILDINGS", 9th EDITION OF THE ALLOWABLE STRESS DESIGN.
12.3 MATERIAL SPECIFICATIONS:
- ALL STEEL SHALL BE PRODUCED DOMESTICALLY.
- ROLLED SHAPES, PLATES AND BARS: ASTM A36 EXCEPT WIDE FLANGE SECTIONS SHALL BE ASTM A572.
- PIPE: ASTM A53, TYPE E, GRADE B.
- TUBES: ASTM A500 GRADE B.
- ANCHOR BOLTS, RODS, NUTS AND WASHERS: ASTM A36
- HEADED STUDS: ASTM A108 GRADE 1015 THROUGH 1020, COLD FINISHED CARBON STEEL, AWS D1.1, TYPE B.
- BOLTED STRUCTURAL CONNECTIONS: UNLESS NOTED OTHERWISE ALL BOLTS SHALL BE 3/4"~ ASTM A325, TYPE N BOLTS INDICATED LESS THAN 5/8"~ SHALL BE ASTM A307.
- WELDED CONNECTIONS: ELECTRODES - E70XX UNO (LOW HYDROGEN). FILLET WELDS SHALL BE 3/16" UNO.

12.4 HIGH-STRENGTH FIELD BOLTED CONNECTIONS SHALL BE INSTALLED, TIGHTENED, TESTED AND INSPECTED ACCORDING TO "SPECIFICATION FOR STRUCTURAL JOINTS USING ASTM A325 OR A490 BOLTS" BY RESEARCH COUNCIL ON STRUCTURAL CONNECTIONS (RCSC). CONNECTIONS SHALL NOT BE CLASSIFIED AS SLIP-CRITICAL (SC) UNLESS INDICATED ON PLANS AS SUCH. "SNUG-TIGHT" AS DEFINED IN THE SPECIFICATION IS SUFFICIENT FOR ALL BOLTED CONNECTIONS UNLESS THE BOLTS IN SUCH A CONNECTION ARE INDICATED AS SLIP CRITICAL (SC). SLIP CRITICAL BOLTS MUST BE FULLY TENSIONED PER SPECIFICATION.
12.5 BRACE AND MAINTAIN ALL STEEL IN ALIGNMENT UNTIL OTHER PARTS OF CONSTRUCTION NECESSARY FOR PERMANENT SUPPORT ARE COMPLETED. CONTRACTOR SHALL BE RESPONSIBLE FOR INSTALLING TEMPORARY SHORING AS REQUIRED FOR THE STABILITY OF THE STEEL FRAME UNTIL ALL STRUCTURAL ELEMENTS HAVE BEEN COMPLETED AND BUILDING IS ENCLOSED.
12.6 ALL WELDING SHALL CONFORM TO THE REQUIREMENTS OF "THE STANDARD CODE FOR WELDING IN BUILDING CONSTRUCTION" OF THE AMERICAN WELDING SOCIETY.
12.7 GROUT FOR COLUMN BASE PLATES AND PRESET BEARING PLATES SHALL BE NON-SHRINK, NON-METALLIC GROUT. (5000 PSI MIN)
12.8 SUBMIT SHOP DRAWINGS INDICATING ALL SHOP AND ERECTION DETAILS INCLUDING PROFILES, SIZES, SPACING AND LOCATIONS OF STRUCTURAL MEMBERS, CONNECTION ATTACHMENTS, FASTENERS, LOADS AND TOLERANCES.
12.9 ALL STEEL EXPOSED TO WEATHER SHALL BE HOT DIPPED GALVANIZED IN ACCORDANCE WITH ASTM A123. STRUCTURAL SHALL RECEIVE SHOP COAT OF PRIMER (COLOR AS DIRECTED BY ARCHITECT) EXCEPT AREAS THAT WILL RECEIVE SPRAY-ON FIRE PROTECTION SHOULD NOT BE PRIMED.

130 ENCLOSED EXP C

WIND - THIS PLAN HAS BEEN DESIGNED TO COMPLY WITH ALL PROVISIONS OFF FBC-2007 INCLUSIVE OF ASCE 7-05 WIND PROVISIONS FOR A NOMINAL DESIGN 3-SEC GUST OF 130 MPH. AS DEFINED IN SECTION 1609.2, DEFINITION (2), THIS STRUCTURE DOES MEET THE REQUIREMENTS FOR AN ENCLOSED BUILDING AND AS SUCH HAS BEEN DESIGNED WITH AN INTERNAL PRESSURE COEFFICIENT OF +.18 AND -.18, UNADJUSTED FOR ZONES 1,2, AND 3. DESIGN HAS UTILIZED A WIND IMPORTANCE FACTOR OF 1.00 FOR BUILDING CATAGORY II IN AN EXPOSURE C AREA AND COMPLIES WITH WIND SPEED MAPS AS ADOPTED BY COUNTY JURISDICTION.

WINDOWS, DOORS, COMPONENTS
DESIGN WIND PRESSURES
ENCLOSED BUILDING

DESIGN WIND PRESSURE (PSF)

Zone 4	Effective Wind Area	Basic Wind Speed 130 MPH 3-sec. Gust		Zone 5	Effective Wind Area	Basic Wind Speed 130 MPH 3-sec. Gust	
	SQ FT	+	-		SQ FT	+	-
ZONE 4 - W 1	<10	42.6	46.2	ZONE 5 - W 2	<10	42.6	57.0
	15	41.6	45.2		15	41.6	55.1
	20	40.6	44.3		20	40.6	53.2
	25	40.2	43.8		25	40.2	52.9
	30	39.8	43.4		30	39.8	51.7
	35	39.4	43.0		35	39.4	50.6
	40	39.0	42.6		40	39.0	49.9
	45	38.6	42.2		45	38.6	48.9
	50	38.1	41.7		50	38.1	48.0
	75	37.2	40.7		75	37.2	46.1
	100	36.3	39.8		100	36.3	44.2
GARAGE DOOR			9'-0" WIDE	7'-0" HEIGHT		37.4	42.3
			18'-0" WIDE	7'-0" HEIGHT		35.9	39.9
ROOF WIND ZONES DESIGN PRESSURES FOR THE ROOF ZONES ARE TAKEN FROM THE MOST CONSERVATIVE CASE. (INCLUDING ROOF SLOPE, EFFECTIVE AREA AND OVERHANG CONDITIONS)				ZONE 1		38.9	42.6
				ZONE 2		38.9	71.4
				ZONE 3		38.9	107.5

NOTES:
1. ANY WINDOW, ALL OR PART, WHICH IS WITHIN 6' OF A CORNER SHALL BE CONSIDERED ZONE 5 PER CHART ABOVE, ALL OTHER WINDOWS ARE CLASSIFIED IN ZONE 4.
2. ROUND AREA DOWN TO THE LARGEST PRESSURE IN THE CHART ABOVE.

- DESIGN PRESSURES ABOVE REPRESENT THE NET PRESSURE (SUM OF EXTERNAL AND INTERNAL PRESSURES) APPLIED NORMAL TO ALL SURFACES. COMPONENT MANUFACTURER SHALL USE THE HIGHER OF THE TWO NUMBERS FOR APPLICABLE SQUARE FOOTAGE.

The Structures Group, Inc.
Dr. Nick M. Bradford, P.E. S.E. S.I. LEEDAP
FL. Reg. #52585
1714 N. Armenia Avenue, #B
Tampa, FL 33607
Phone (813)877-3421
Fax (813)875-9320
EB FL #8956
www.Structures-Group.com

© THESE DRAWINGS ARE THE PROPERTY OF NICK M. BRADFORD, P.E. ANY REPRODUCTION OR UNAUTHORIZED USE IS PROHIBITED.

NOTE: IT IS THE CONTRACTORS RESPONSIBILITY TO REVIEW ALL DRAWINGS BEFORE CONSTRUCTION BEGINS. THE ENGINEER OF RECORD IS RESPONSIBLE FOR THE STRUCTURAL INTEGRITY OF THIS PROJECT ONLY. ANY DISCREPANCY BETWEEN FIELD CONDITIONS, OTHER DESIGN PROFESSIONALS' SHOP DRAWINGS, CONTRACTORS' BUILDING METHODS, AND THESE SIGNED AND SEALED DRAWINGS MUST BE BROUGHT TO THE ATTENTION OF THE ENGINEER OF RECORD PRIOR TO THE COMMENCEMENT OF CONSTRUCTION.

CONTRACTOR TO VERIFY ALL DIMENSIONS PRIOR TO START OF ANY CONSTRUCTION. THE STRUCTURES GROUP IS NOT RESPONSIBLE FOR ANY DIMENSIONS.

THE STRUCTURES GROUP IS RESPONSIBLE FOR PROPOSED CHANGES TO ORIGINAL STRUCTURE SHOWN ON THESE PAGES ONLY. THE STRUCTURES GROUP IS NOT RESPONSIBLE FOR EXISTING STRUCTURAL COMPONENTS.

Plans and specifications comply with the Florida building code, section 1609 for 130 mph wind zone (2007 edition)

This drawing is valid for 12 months after the date it is signed and sealed or until the requirements of the 2007 edition of the Florida Building Code is changed.

This drawing is signed and sealed for the structural portions of the drawing only. Architectural, electrical, or mechanical details, if shown, are for visual reference only and are not covered under this seal.

REV.	DATE & COMMENTS	BY

MANATEE FUEL TANK
Center
Florida

JOB NUMBER :	20090097
DATE :	MAY 15, 2009
DRAWN BY :	NMB
SCALE :	

SHEET NUMBER
S1.00

SIGN & SEAL

Dr. Nick M. Bradford, P.E. S.E. S.I.
FL. Reg. #52585

ELECTRICAL SPECIFICATIONS – DIVISION 16

SCOPE OF WORK AND GENERAL CONDITIONS:
THE SCOPE OF WORK SPECIFIED HEREIN CONSISTS OF PROVIDING (DEFINED AS FURNISH AND INSTALL) ALL LABOR, MATERIALS, EQUIPMENT AND SERVICES REQUIRED TO COMPLETE THE ELECTRICAL AND RELATED WORK INDICATED ON THE DRAWINGS, AS SPECIFIED HEREIN AND SUBJECT TO THE TERMS AND CONDITIONS OF THE CONTRACT. ELECTRICAL WORK INCLUDES, BUT IS NOT LIMITED TO, THE FOLLOWING:
DISCONNECT SWITCHES
GROUNDING
RACEWAY FOR POWER DISTRIBUTION
CONDUCTORS FOR POWER DISTRIBUTION
WIRING DEVICES
LIGHTING FIXTURES
CONNECTION OF MOTORS, CONTROL DEVICES AND ELECTRICAL EQUIPMENT FURNISHED BY OTHERS
TESTING
FINAL ACCEPTANCE/WARRANTY
RECORD DRAWINGS

ITEMS SPECIFIED HEREIN, SHOWN ON THE DRAWINGS, AND/OR REASONABLY INTERPRETED FROM THE DRAWINGS THAT ARE NECESSARY TO COMPLETE THE ELECTRICAL WORK SHALL BE PROVIDED BY THIS DIVISION, WHETHER ITEM IS SPECIFICALLY SHOWN OR NOT.

GENERAL:
CONTRACTOR SHALL BECOME THOROUGHLY ACQUAINTED WITH THE PROJECT SITE (e.g. EXISTING CONDITIONS) AND THE ENTIRE CONSTRUCTION DOCUMENTS PACKAGE (e.g. ARCHITECTURAL, STRUCTURAL, MECHANICAL, PLUMBING, FIRE PROTECTION, ELECTRICAL DRAWINGS AND SPECIFICATIONS) BEFORE BID SUBMISSION. WORK OF THE ELECTRICAL CONTRACTOR MUST BE COORDINATED WITH THE WORK OF ALL TRADES.

INTENT:
THE INTENT OF THE DRAWINGS AND SPECIFICATIONS IS TO DESCRIBE THAT COMPLETE ELECTRICAL AND SPECIAL SYSTEMS ARE REQUIRED. HOWEVER, THE WORK SHALL BE COMPLETE EVEN THOUGH ITEMS MAY NOT BE SPECIFICALLY CALLED FOR OR SHOWN. INSTALLATIONS SHALL MEET ALL GOVERNING CODES, SHALL BE SUBJECT TO THE APPROVAL OF THE ARCHITECT/ENGINEER AND ALL AGENCIES HAVING JURISDICTION.

WORK NOT COVERED IN THIS SECTION:
RECESSES, CHASES, AND OTHER PROVISIONS TO BE MADE IN THE STRUCTURE AS REQUIRED TO ACCOMMODATE ELECTRICAL ITEMS, SUCH AS CONDUIT, PANELS, SWITCHES, ETC, SHALL BE PROVIDED BY THE TRADES CONCERNED. THE ELECTRICIAN SHALL, HOWEVER, NOTIFY ALL SUCH TRADES OF HIS EXACT REQUIREMENTS AHEAD OF TIME AND SHALL PAY THE COSTS OF ANY CUTTING OR PATCHING CAUSED BY FAILURE TO DO SO. ALL SUCH REMEDIAL WORK SHALL BE DONE ONLY BY MECHANICS OF THE TRADES INVOLVED.

PERMITS, TAXES, FEES:
CONTRACTOR SHALL OBTAIN ALL GOVERNMENTAL PERMITS, PAY ALL SALES TAXES AND OTHER ASSOCIATED FEES INCLUDING COSTS FOR UTILITY CONNECTIONS, REQUIRED TO PERFORM THE INTENDED ELECTRICAL WORK. CONTRACTOR SHALL FILE ALL NECESSARY PLANS, PREPARE ALL DOCUMENTS AND OBTAIN ALL NECESSARY APPROVALS OF ALL GOVERNMENTAL AGENCIES HAVING JURISDICTION. CONTRACTOR SHALL OBTAIN ALL REQUIRED CERTIFICATES OF INSPECTION FOR ELECTRICAL WORK AND DELIVER SAME TO THE OWNER AND ARCHITECT BEFORE REQUEST FOR ACCEPTANCE AND FINAL PAYMENT FOR THE WORK.

CONTRACTOR SHALL INCLUDE IN THE WORK, WITHOUT EXTRA COST TO THE OWNER, ALL LABOR, MATERIALS, SERVICES, APPARATUS, OR DRAWINGS NECESSARY TO COMPLY WITH ALL APPLICABLE LAWS, ORDINANCES, RULES AND REGULATIONS, WHETHER OR NOT SHOWN ON DRAWINGS AND/OR SPECIFIED.

ALL MATERIALS FURNISHED AND ALL WORK INSTALLED SHALL COMPLY WITH THE FOLLOWING:
NATIONAL ELECTRIC CODE
APPLICABLE STATE AND LOCAL CODES
NATIONAL BUREAU OF FIRE UNDERWRITERS
NFPA 30–2008
NFPA 101–2006

ALL MATERIAL AND EQUIPMENT PROVIDED FOR THE ELECTRICAL WORK SHALL BEAR THE APPROVAL LABEL, OR SHALL BE LISTED, BY UNDERWRITERS' LABORATORIES, INC.

MEASUREMENTS:
SHOULD THE CONTRACTOR DISCOVER ANY DISCREPANCY BETWEEN ACTUAL MEASUREMENTS AND THOSE INDICATED ON THE DRAWINGS, WHICH PREVENTS FOLLOWING GOOD PRACTICE OR THE INTENT OF THE DRAWINGS AND SPECIFICATIONS, HE SHALL NOTIFY THE ARCHITECT/ENGINEER THROUGH THE GENERAL CONTRACTOR, AND SHALL NOT PROCEED WITH HIS WORK UNTIL HE HAS RECEIVED INSTRUCTIONS FROM THE ARCHITECT/ENGINEER. ALL REQUESTS FOR INFORMATION (RFI) SHALL INCLUDE A PROPOSED SOLUTION.

PRIOR TO ROUGH–IN OF EQUIPMENT THE OWNER, ARCHITECT AND ENGINEER RESERVE THE RIGHT TO RELOCATE ANY PANELBOARD, DISCONNECT, STARTER, LIGHTING FIXTURE, WIRING DEVICE, COMMUNICATIONS OUTLET, ETC THREE (3) FEET IN ANY DIRECTION WITHOUT ANY ADDITIONAL CHARGE, FEE, OR CHANGE ORDER.

DRAWINGS:
DRAWINGS ARE DIAGRAMMATIC AND INDICATE THE GENERAL LOCATION OF THE ELECTRICAL AND SPECIAL SYSTEMS WORK INCLUDED IN THE CONTRACT. THE ENTIRE CONSTRUCTION DOCUMENTS PACKAGE (DRAWINGS AND SPECIFICATIONS) SHALL BE EXAMINED FOR EXACT LOCATION OF FIXTURES, DEVICES AND EQUIPMENT. WHERE ITEMS ARE NOT LOCATED BY THE DRAWINGS OR SPECIFICATIONS OF OTHER CONSULTANTS THEN THE ITEMS SHALL BE LOCATED PER THE ENGINEERING DRAWINGS, HOWEVER, THE DRAWINGS ARE NOT TO BE SCALED.

CONTRACTOR SHALL FOLLOW THE ELECTRICAL DRAWINGS IN LAYING OUT WORK AND SHALL COORDINATE WITH THE DRAWINGS OF OTHER TRADES TO VERIFY SPACES IN WHICH WORK WILL BE INSTALLED. MAINTAIN MAXIMUM HEADROOM AND SPACE AT ALL LOCATIONS. WHERE HEADROOM OR SPACE CONDITIONS APPEAR INADEQUATE, THE ARCHITECT/ENGINEER SHALL BE NOTIFIED BEFORE PROCEEDING WITH INSTALLATION. ALL REQUESTS FOR INFORMATION (RFI) SHALL INCLUDE A PROPOSED SOLUTION.

IF DIRECTED BY THE ARCHITECT/ENGINEER, THE CONTRACTOR SHALL, WITHOUT EXTRA CHARGE, MAKE REASONABLE MODIFICATIONS IN THE LOCATIONS OF ELECTRICAL WORK AS NEEDED TO PREVENT CONFLICTS WITH WORK OF OTHER TRADES AND FOR PROPER INSTALLATION OF THE WORK.

COOPERATION WITH OTHER TRADES:
CONTRACTOR SHALL GIVE FULL COOPERATION TO OTHER TRADES AND SHALL FURNISH IN WRITING TO THE ARCHITECT/ENGINEER ANY INFORMATION NECESSARY TO PERMIT THE WORK OF OTHER TRADES TO BE INSTALLED SATISFACTORILY AND WITH THE LEAST POSSIBLE INTERFERENCE OR DELAY.

WHERE ELECTRICAL WORK WILL BE INSTALLED IN CLOSE PROXIMITY TO, OR MAY INTERFERE WITH, WORK OF OTHER TRADES THE CONTRACTORS SHALL ASSIST EACH OTHER IN WORKING OUT A SATISFACTORY SPACE FOR EACH CONTRACTORS WORK. IF DIRECTED BY THE ARCHITECT/ENGINEER, THE CONTRACTOR SHALL PREPARE COMPOSITE WORKING DRAWINGS AND SECTIONS AT SUITABLE SCALE, NOT LESS THAN 1/4" = 1'–0", CLEARLY SHOWING HOW WORK IS TO BE INSTALLED IN RELATION TO WORK OF OTHER TRADES. IF THE CONTRACTOR INSTALLS HIS WORK BEFORE COORDINATING WITH OTHER TRADES, OR CAUSES ANY INTERFERENCE WITH WORK OF OTHER TRADES, THE CONTRACTOR SHALL MAKE THE NECESSARY CHANGES IN THE ELECTRICAL WORK TO CORRECT THE CONDITIONS WITHOUT EXTRA CHARGE.

CONTRACTOR SHALL FURNISH TO OTHER TRADES, AS REQUIRED, ALL NECESSARY TEMPLATES, PATTERNS, AND ASSEMBLY DETAILS FOR THE PROPER INSTALLATION OF WORK AND FOR THE PURPOSE OF COORDINATING ADJACENT WORK.

SCAFFOLDING, RIGGING, HOISTING:
CONTRACTOR SHALL PROVIDE ALL SCAFFOLDING, RIGGING AND HOISTING NECESSARY FOR ERECTION AND DELIVERY INTO THE PREMISES OF ALL ELECTRICAL EQUIPMENT. REMOVE SAME FROM PREMISES WHEN NO LONGER REQUIRED.

MATERIAL AND WORKMANSHIP:
ALL MATERIALS AND APPARATUS REQUIRED FOR ELECTRICAL WORK, EXCEPT AS SPECIFICALLY NOTED OTHERWISE, SHALL BE NEW, OF FIRST CLASS QUALITY, AND SHALL BE FURNISHED, DELIVERED, ERECTED, CONNECTED AND FINISHED IN EVERY DETAIL AND SHALL BE SO SELECTED AND ARRANGED AS TO FIT PROPERLY INTO THE BUILDING SPACES. WHERE NO SPECIFIC KIND OR QUALITY OF MATERIAL IS GIVEN, A FIRST CLASS STANDARD ARTICLE, AS APPROVED BY THE ENGINEER, SHALL BE PROVIDED.

CONTRACTOR SHALL PROCURE THE SERVICES OF AN EXPERIENCED SUPERINTENDENT, WHO SHALL BE CONSTANTLY IN CHARGE OF THE INSTALLATION OF THE WORK, TOGETHER WITH ALL SKILLED WORK PERSONNEL, FITTERS, METAL WORKERS, WELDERS, HELPERS, AND LABOR REQUIRED TO UNLOAD, TRANSFER, ERECT, CONNECT, ADJUST, START, OPERATE AND TEST EACH SYSTEM.

ALL EQUIPMENT AND MATERIALS SHALL BE INSTALLED IN ACCORDANCE WITH THE RECOMMENDATIONS OF THE MANUFACTURER. THIS INCLUDES THE PERFORMANCE OF ALL TESTS RECOMMENDED BY THE MANUFACTURER.

CUTTING AND PATCHING:
CONTRACTOR SHALL PROVIDE ALL CUTTING AND PATCHING NECESSARY TO INSTALL ELECTRICAL WORK. PATCHING SHALL MATCH ADJACENT SURFACES AND SHALL MEET THE APPROVAL OF THE ARCHITECT AND OWNER.

NO STRUCTURAL MEMBERS SHALL BE CUT OR MODIFIED IN ANY WAY WITHOUT THE WRITTEN APPROVAL OF THE STRUCTURAL ENGINEER. ANY MODIFICATION SHALL BE DONE IN A MANNER APPROVED BY THE STRUCTURAL ENGINEER.

SLEEVES AND PLATES:
CONTRACTOR SHALL PROVIDE AND LOCATE ALL SLEEVES REQUIRED FOR ELECTRICAL WORK BEFORE THE FLOORS, WALLS AND CEILINGS ARE CONSTRUCTED, OR SHALL BE RESPONSIBLE FOR THE COST OF CUTTING AND PATCHING WHERE SLEEVES WERE NOT INSTALLED, OR WHERE INCORRECTLY LOCATED. CONTRACTOR SHALL PROVIDE ALL DRILLING REQUIRED FOR THE INSTALLATION OF HIS HANGERS. SLEEVES SHALL BE PROVIDED FOR ALL CONDUIT PASSING THROUGH CONCRETE FLOOR SLABS ABOVE GRADE AND CONCRETE, MASONRY, TILE AND GYPSUM WALL CONSTRUCTION.

CONDUIT THROUGH FLOORS AND WALLS SHALL UTILIZE A U.L. APPROVED FIRE RATED PENETRATION SYSTEM. WHERE SLEEVES ARE PLACED IN EXTERIOR WALLS BELOW GRADE, THE SPACE BETWEEN THE CONDUIT AND THE SLEEVES SHALL BE SEALED WATERTIGHT.

WHERE CONDUIT MOTION DUE TO EXPANSION AND CONTRACTION WILL OCCUR, PROVIDE SLEEVES OF SUFFICIENT DIAMETER TO PERMIT FREE MOVEMENT OF THE CONDUIT. CHECK FLOOR AND WALL CONSTRUCTION FINISHES TO DETERMINE PROPER LENGTH OF SLEEVES FOR VARIOUS LOCATIONS. PROVIDE ACTUAL LENGTHS TO SUIT THE FOLLOWING:
1. TERMINATE SLEEVES FLUSH WITH WALLS, PARTITIONS AND CEILING.
2. IN AREAS WHERE CONDUIT IS CONCEALED, AS IN CHASES, TERMINATE SLEEVES 1" ABOVE FLOOR.
3. IN AREAS WHERE CONDUIT IS EXPOSED, EXTEND SLEEVES 2" ABOVE FINISHED FLOOR.
4. SLEEVES SHALL BE CONSTRUCTED OF SCHEDULE 40 STEEL PIPE.

FASTEN SLEEVES SECURELY IN FLOORS AND WALLS SO THEY WILL NOT BECOME DISPLACED WHEN CONCRETE IS POURED OR WHEN OTHER CONSTRUCTION IS BUILT AROUND THEM. TAKE PRECAUTIONS TO PREVENT CONCRETE, PLASTER OR OTHER MATERIALS FROM BEING FORCED INTO THE SPACE BETWEEN PIPE AND SLEEVE DURING CONSTRUCTION.

PENETRATIONS:
ALL PENETRATIONS THROUGH FIRE RATED FLOORS, WALLS AND CEILINGS SHALL BE PROVIDED WITH A U.L. APPROVED FIRE STOP METHOD IN ACCORDANCE WITH THE NFPA 101–2006 LIFE SAFETY CODE BOOK.

SUBSTITUTION OF SPECIFIED EQUIPMENT:
MATERIALS OR PRODUCTS SPECIFIED BY TRADE NAME, MANUFACTURER'S NAME OR CATALOG NUMBER SHALL BE PROVIDED AS SPECIFIED.

SUBSTITUTIONS ARE NOT PERMITTED WITHOUT WRITTEN APPROVAL TEN (10) WORKING DAYS PRIOR TO BID DATE FROM THE ENGINEER. APPROVALS OF 'EQUIVALENT' MATERIALS OR PRODUCTS WILL BE MADE AVAILABLE TO ALL KNOWN BIDDERS AND ISSUED AS AN ADDENDUM (PRIOR TO BID) TO THE CONTRACT DOCUMENTS IF SUBSTITUTED MATERIALS OR PRODUCTS ARE APPROVED BY ARCHITECT/ENGINEER.

ANY CONTRACTOR PROPOSING AN 'EQUIVALENT' MATERIAL OR PRODUCT MUST SUBMIT, WITH THE REQUEST, COMPLETE CATALOG INFORMATION TO PERMIT EVALUATION OF THE PRODUCT. IN THE CASE OF LIGHTING FIXTURES, AN INDEPENDENT TESTING LABORATORY TEST REPORT (NOT THE MANUFACTURER'S) STATING FIXTURE EFFICIENCY AND PERFORMANCE, SHALL ACCOMPANY THE REQUEST.

CONTRACTOR SHALL BE RESPONSIBLE TO PROVIDE CORRECTIONS TO ALL SITUATIONS CREATED BY THE SUBSTITUTION OF MATERIALS OR PRODUCTS. THE ACCEPTANCE OF SUBSTITUTED MATERIALS OR PRODUCTS, EITHER PRIOR TO BID OR THEREAFTER, DOES NOT RELIEVE THE CONTRACTOR FROM THE RESPONSIBILITY TO PROVIDE CORRECTIONS, AT HIS/HER EXPENSE, FOR ALL DISCREPANCIES AND CONFLICTS CREATED BY THE SUBSTITUTION OF MATERIALS OR PRODUCTS.

SHOP DRAWINGS:
CONTRACTOR SHALL SUBMIT FOR REVIEW AND APPROVAL SHOP DRAWINGS OF ALL MATERIALS OR PRODUCTS REQUIRED TO COMPLETE THE PROJECT AND NO MATERIALS OR PRODUCTS SHALL BE DELIVERED TO THE JOB SITE OR INSTALLED UNTIL THE CONTRACTOR HAS ENGINEER REVIEWED SHOP DRAWINGS. SHOP DRAWINGS FOR MATERIALS OR PRODUCTS SHALL BE SUBMITTED AS ONE COMPLETE PACKAGE. CONTRACTOR SHALL FURNISH THE NUMBER OF COPIES REQUIRED BY THE GENERAL AND SPECIAL CONDITIONS OF THE CONTRACT, BUT IN NO CASE LESS THAN SIX (6) IDENTICAL COPIES. SHOP DRAWINGS SHALL BE REVIEWED AND STAMPED BY THE ELECTRICAL AND GENERAL CONTRACTORS FOR COMPLIANCE WITH THE SPECIFIED MATERIALS AND PRODUCTS PRIOR TO SUBMISSION TO THE ARCHITECT/ENGINEER.

SAMPLES, DRAWINGS, SPECIFICATIONS, CUT SHEETS, ETC SUBMITTED FOR REVIEW SHALL BE PROPERLY LABELED AND SHALL INDICATE THE SPECIFIC ITEM FOR WHICH THE CONTRACTOR IS PROPOSING TO PROVIDE.

"NO EXCEPTION" RENDERED ON SHOP DRAWINGS SHALL NOT BE CONSIDERED AS A GUARANTEE THAT THE MATERIAL OR PRODUCTS COMPLY WITH THE BUILDING CONDITIONS OR MEASUREMENTS. WHERE SHOP DRAWINGS ARE REVIEWED, SAID "NO EXCEPTION" DOES NOT IN ANY WAY RELIEVE THE CONTRACTOR FROM THE RESPONSIBILITY OF PROVIDING LABOR, MATERIAL OR PRODUCTS REQUIRED TO PERFORM THE WORK AS REQUIRED BY THE DRAWINGS AND SPECIFICATIONS.

SHOP DRAWINGS SUBMITTALS ARE REQUIRED ON ELECTRICAL DISTRIBUTION EQUIPMENT, CONDUIT, CONDUCTORS (WIRE), DISCONNECT SWITCHES, WIRING DEVICES, AND LIGHT FIXTURES. PROVIDE WIRING DIAGRAMS FOR ALL EQUIPMENT AND A WIRING SCHEMATIC DEPICTING ALL CONTROLS AND POWER WIRING.

DISCONNECT SWITCHES:
DISCONNECT SWITCHES SHALL BE U.L. LISTED AND FROM SAME MANUFACTURER AS POWER DISTRIBUTION EQUIPMENT. SWITCH BLADES SHALL BE FULLY VISIBLE IN THE "OFF" POSITION WITH THE DOOR OPEN. ALL CURRENT CARRYING PARTS SHALL BE PLATED TO RESIST CORROSION.

SWITCHES SHALL BE QUICK–MAKE, QUICK–BREAK SUCH THAT, DURING NORMAL OPERATION, THE CONTACTS SHALL NOT BE CAPABLE OF BEING RESTRAINED BY THE OPERATING HANDLE AFTER THE CLOSING OR OPENING ACTION OF THE CONTACTS HAS STARTED. THE HANDLE AND MECHANISM SHALL BE AN INTEGRAL PART OF THE BOX, NOT THE COVER, WITH POSITIVE PADLOCKING PROVISIONS IN THE "OFF" POSTION.

PROVIDE HEAVY–DUTY, NEMA–1 ENCLOSURE UNLESS NEMA–3R (RAIN PROOF) IS REQUIRED BY THE SWITCH LOCATION. ENCLOSURES SHALL BE PROVIDED WITH A POST FABRICATION APPLIED GRAY ENAMEL FINISH.

GROUNDING:
PROVIDE A SINGLE, COMPLETE GROUNDING NETWORK FOR THE ENTIRE ELECTRICAL AND SPECIAL SYSTEMS WHICH COMPLIES WITH NEC REQUIREMENTS.

PROVIDE BONDING CONNECTION WITH GROUND BUSHING TO CONDUIT FROM DISTRIBUTION PANEL TO THE BREAKERS AND PANELS SERVED.

CONDUIT FOR POWER DISTRIBUTION WIRING:
WIRING FOR POWER DISTRIBUTION SHALL BE INSTALLED IN *RIGID GALVANIZED STEEL (RGS)*. PROVIDE THE CONDUIT TYPE INDICATED IN THIS SPECIFICATION WHERE CONDUIT TYPE IS NOT NOTED ON THE DRAWINGS.

RIGID *GALVANIZED* STEEL (RGS) CONDUIT WITH THREADED FITTINGS SHALL BE PROVIDED ABOVE GROUND AT EXPOSED INTERIOR AND EXTERIOR LOCATIONS WHERE CONDUIT MAY BE SUBJECTED TO PHYSICAL DAMAGE FROM VEHICLES, MAINTENANCE EQUIPMENT, ETC. PROVIDE LARGE RADIUS SWEEP ELBOWS FOR RGS CONDUIT.

DURING CONSTRUCTION CONDUIT SHALL BE PROTECTED AGAINST DAMAGE AND ENTRANCE OF WATER, DIRT OR FOREIGN MATERIAL. FIRE RATED ASSEMBLIES SHALL BE PROVIDED WHERE CONDUIT PASSES THROUGH FIRE RATED CONSTRUCTION. REFER TO THE ARCHITECTURAL DRAWINGS FOR EXACT LOCATIONS OF FIRE RATED CONSTRUCTION. REFER TO THE FIRE STOP PENETRATION DETAILS ON THE ELECTRICAL DRAWINGS.

INSULATING BUSHINGS WITH DOUBLE LOCK–NUTS SHALL BE USED WHEREVER A CONDUIT 1–1/4" DIA OR LARGER ENTERS A BOX, PANEL, DISCONNECT OR ELECTRICAL EQUIPMENT.

CONDUIT SIZES SHOWN ON THE DRAWINGS AND SCHEDULES ARE THE MINIMUM SIZES REQUIRED. LARGER SIZE CONDUIT TO FACILITATE WIRE PULLS, ETC, IS PERMITTED.

CONDUCTORS:
PROVIDE 75 DEGREE CELSIUS (167 DEGREE FAHRENHEIT) TYPE THHW, THW, THWN, OR XHHW INSULATED COPPER CONDUCTORS RATED AT 600V FOR POWER DISTRIBUTION WIRING. CONDUIT WIRE FILL SHOWN ON THE DRAWINGS AND FEEDER SCHEDULES ARE BASED ON TYPE THW WIRE UNLESS NOTED OTHERWISE.

CONDUCTORS UP TO AND INCLUDING NO. 10 AWG SHALL BE SOLID AND CONDUCTORS NO. 8 AWG AND LARGER SHALL BE STRANDED. MINIMUM CONDUCTOR SIZE SHALL BE NO.12 AWG. CONDUCTORS SHALL BE CONTINUOUS BETWEEN EQUIPMENT AND DEVICES. SPLICES ARE TO BE MADE ONLY IN ACCESSIBLE JUNCTION OR OUTLET BOXES AND SHOULD BE KEPT TO A MINIMUM. SPLICES ON NO.12 AND NO.10 WIRE SHALL BE MADE WITH PRESSURE CONNECTORS CAPABLE OF CARRYING FULL WIRE CAPACITY. SPLICES ON NO.8 WIRE AND LARGER SHALL BE MADE WITH INSULATED MECHANICAL TAPS. CONNECTIONS TO FIXED EQUIPMENT TERMINALS ARE TO BE MADE WITH SOLDERLESS LUGS.

ALL CONDUIT USED FOR POWER DISTRIBUTION SHALL CONTAIN A GROUNDING CONDUCTOR. CONDUIT RACEWAY SHALL NOT BE USED IN PLACE OF A GROUNDING CONDUCTOR.

WIRING DEVICES:
THE EXTENT OF WIRING DEVICE WORK IS INDICATED ON THE DRAWINGS. WIRING DEVICES ARE DEFINED AS SINGLE DISCRETE UNITS OF ELECTRICAL DISTRIBUTION SYSTEMS THAT ARE INTENDED TO CARRY BUT NOT UTILIZE ELECTRIC ENERGY. TYPES OF WIRING DEVICES IN THIS SECTION INCLUDE:
- RECEPTACLES,
- GROUND FAULT CIRCUIT INTERRUPTERS,
- ARC FAULT CIRCUIT INTERRUPTERS, AND
- LIGHT SWITCHES.

PROVIDE WHITE COLORED WIRING DEVICES AND METAL COVERPLATES UNLESS NOTED OTHERWISE. FINAL COLOR SELECTION SHALL BE COORDINATED WITH OWNER/ARCHITECT PRIOR TO BID.

QUALITY ASSURANCE:
NEC COMPLIANCE: COMPLY WITH NEC AS APPLICABLE TO INSTALLATION AND WIRING OF ELECTRICAL WIRING DEVICES.

UL COMPLIANCE: COMPLY WITH APPLICABLE REQUIREMENTS OF U.L. 20, 486A, 498 AND 943 PERTAINING TO INSTALLATION OF WIRING DEVICES. PROVIDE WIRING DEVICES WHICH ARE U.L. LISTED AND LABELED.

NEMA COMPLIANCE: COMPLY WITH APPLICABLE PORTIONS OF NEMA STANDARDS PUBLICATION NUMBER WD–1, "GENERAL PURPOSE WIRING DEVICES", WD–2, "SEMICONDUCTOR DIMMERS FOR INCANDESCENT LAMPS", AND WD–5, "SPECIFIC PURPOSE WIRING DEVICES".

RECEPTACLES:
SIMPLEX: PROVIDE SPECIFICATION GRADE 20–AMPERE, 125 VOLT, HEAVY–DUTY, 2–POLE, 3–WIRE, RECEPTACLE WITH GREEN HEXAGONAL EQUIPMENT GROUND SCREW AND METAL PLASTER EARS DESIGNED FOR SIDE AND BACK WIRING WITH SPRING LOADED, SCREW ACTIVATED PRESSURE PLATE IN NEMA 5–20R CONFIGURATION UNLESS NOTED OTHERWISE. COORDINATE ALL "SPECIAL" RECEPTACLES WITH THE EQUIPMENT SERVED PRIOR TO ROUGH–IN. PROVIDE RECEPTACLE RATING AND CONFIGURATION TO MATCH EQUIPMENT SERVED.

DUPLEX: PROVIDE SPECIFICATION GRADE 20–AMPERE, 125 VOLT, HEAVY–DUTY, 2–POLE, 3–WIRE, RECEPTACLE WITH GREEN HEXAGONAL EQUIPMENT GROUND SCREW AND METAL PLASTER EARS DESIGNED FOR SIDE AND BACK WIRING WITH SPRING LOADED, SCREW ACTIVATED PRESSURE PLATE IN NEMA 5–20R CONFIGURATION.

GROUND–FAULT CIRCUIT INTERRUPTERS:
PROVIDE SPECIFICATION GRADE "FEED–THRU" TYPE GROUND–FAULT CIRCUIT INTERRUPTERS, WITH HEAVY–DUTY DUPLEX RECEPTACLES, CAPABLE OF PROTECTING CONNECTED DOWNSTREAM RECEPTACLES ON SINGLE CIRCUIT, AND OF BEING INSTALLED IN A 2–3/4" DEEP OUTLET BOX WITHOUT ADAPTER, GROUNDING TYPE U.L. RATED CLASS A, GROUP 1, RATED 20–AMPERES, 120–VOLTS, 60 HZ, WITH SOLID–STATE GROUND–FAULT SENSING AND SIGNALING, WITH 5 MILLIAMPERES GROUND–FAULT TRIP LEVEL, EQUIP WITH NEMA 5–20R CONFIGURATION.

LIGHT SWITCHES:
SINGLE AND TWO POLE: PROVIDE HARD USE SPECIFICATION GRADE RECESS MOUNTED SINGLE AND TWO–POLE QUIET TOGGLE SWITCHES, 20–AMPERE, 120/277 VOLTS AC. PROVIDE WITH MOUNTING YOKE INSULATED FROM MECHANISM, PLASTER EARS, SWITCH HANDLE, AND SIDE–WIRED SCREW TERMINALS.

THREE AND FOUR WAY: PROVIDE HARD USE SPECIFICATION GRADE RECESS MOUNTED 3 AND 4–WAY AC QUIET SWITCHES, 20–AMPERES, 120/277 VOLTS PROVIDE WITH MOUNTING YOKE INSULATED FROM MECHANISM, PLASTER EARS, SWITCH HANDLE, SIDE–WIRED SCREW TERMINALS, WITH BREAK–OFF TAB FEATURES, WHICH ALLOWS WIRING WITH SEPARATE OR COMMON FEED.

LIGHTING FIXTURES:
CONTRACTOR SHALL PROVIDE, WIRE AND LAMP ALL LIGHTING FIXTURES SHOWN ON SITE PLAN, FLOOR PLANS AND LIGHTING FIXTURE SCHEDULE. AT SUBSTANTIAL COMPLETION, CONTRACTOR SHALL CLEAN DUST, DEBRIS, FINGERPRINTS, ETC FROM ALL FIXTURE LENSES, LOUVERS, AND REFLECTORS AND SHALL REPLACE ALL LAMPS, BALLASTS, ETC THAT ARE NOT WORKING.

CONTRACTOR SHALL REVIEW THE ARCHITECTURAL DRAWINGS (SECTIONS, ELEVATIONS, DETAILS, ETC.) FOR LIGHTING FIXTURES WHICH MAY BE SHOWN AND SHALL NOTIFY THE ARCHITECT/ ENGINEER PRIOR TO BID IF FIXTURES APPEAR ON THE ARCHITECTURAL DRAWINGS THAT DO NOT APPEAR ON THE ELECTRICAL DRAWINGS.

EQUIPMENT FURNISHED BY OTHERS:
CONTRACTOR SHALL PROVIDE ELECTRICAL SERVICE TO EQUIPMENT PROVIDED BY OTHERS INCLUDING, BUT NOT LIMITED TO, PUMPS, CONDUIT, WIRE, DISCONNECT SWITCHES, ETC AS REQUIRED BY OTHERS.

PROJECT CLOSE–OUT:
TESTING: FINAL TESTS SHALL BE MADE AFTER WORK HAS BEEN COMPLETED. PROVIDE COPY OF FINAL TEST TO OWNER/ ARCHITECT/ ENGINEER. WHEN REQUESTED, THE CONTRACTOR SHALL CONDUCT REQUIRED OPERATING TEST(S) IN THE PRESENCE OF THE ARCHITECT/ ENGINEER AND OTHER AUTHORIZED PERSONS.

TESTS SHALL DEMONSTRATE THAT THE SYSTEM FUNCTIONS PROPERLY THROUGHOUT, THAT IT IS FREE FROM GROUNDS AND SHORTS, AND THAT ALL REQUIREMENTS HEREIN HAVE BEEN COMPLIED WITH. CONTRACTOR SHALL PROVIDE ALL NECESSARY INSTRUMENTS AND PERSONNEL FOR TESTS AND THE OWNER WILL SUPPLY THE CURRENT. TESTS SHALL BE AS PRESCRIBED BY THE AUTHORITY HAVING JURISDICTION AND ENGINEER AND SHALL INCLUDE MEGGER TESTS IN ACCORDANCE WITH N.E.C. RECOMMENDATIONS.

FINAL ACCEPTANCE:
AFTER TESTING, A FINAL INSPECTION SHALL BE MADE BY THE OWNER/ ARCHITECT/ ENGINEER AND OTHER AUTHORIZED PERSONS WITH THE CONTRACTOR. THE INSPECTION SHALL INCLUDE, BUT NOT BE LIMITED TO, CHECK ALL PANELS ARE COMPLETE WITH NAMEPLATES AND CIRCUIT DIRECTORIES, ALL LIGHTING FIXTURES ARE OPERATING, PROPERLY CLEANED AND LAMPED, AND THAT ALL WORK HAS BEEN PERFORMED IN PROFESSIONAL MANNER.

FINAL ACCEPTANCE OF THE PROJECT SHALL NOT PREJUDICE THE OWNER'S RIGHT TO REQUIRE REPLACEMENT AND/OR REPAIR OF ANY DEFECTIVE WORK OR MATERIALS.

WARRANTY:
ALL PARTS, MATERIALS, EQUIPMENT AND LABOR FURNISHED UNDER THIS SECTION OF THE SPECIFICATIONS SHALL BEAR A ONE (1) YEAR, NO COST TO THE OWNER, WARRANTY FROM THE DATE OF FINAL ACCEPTANCE. CONTRACTOR SHALL PROVIDE ALL OF THE ABOVE WARRANTY REQUIREMENTS IN A WRITTEN STATEMENT ALONG WITH EQUIPMENT MANUFACTURER'S WARRANTIES.

RECORD DRAWINGS:
CONTRACTOR SHALL KEEP ACCURATE RECORDS OF ACTUAL CONDITIONS INCLUDING DEVICE LOCATIONS AND CONDUIT RUNS WHERE DIFFERENT FROM THE CONTRACT DOCUMENTS. CONTRACTOR SHALL PROVIDE OWNER WITH A REPRODUCIBLE SET OF "AS BUILT" PLANS SHOWING THE COMPLETE ELECTRICAL AND FIRE ALARM SYSTEMS AS INSTALLED (AS BUILT DRAWINGS). THE SCALE ON THESE AS BUILT DRAWINGS SHALL BE NO SMALLER THAN THE SCALE USED ON THE ORIGINAL PLANS.

END OF DIVISION 16

DEMOLITION NOTES:

EXISTING UNDERGROUND STORAGE TANK (UST)
THE UST SHALL BE DEMOLISHED ACCORDING TO THE PROCEDURES AND DESIRED PHASING, SETUP, AND SCHEDULING MUTUALLY AGREED UPON BY THE OWNER AND THE DEMOLITION CONTRACTOR. THE PROJECT SHALL BE PHASED SO THAT THE GENERATOR REMAINS FULLY OPERABLE AND AVAILABLE THROUGHOUT CONSTRUCTION. THE MAXIMUM DOWN TIME SHALL BE 1 HOUR. THE NEW ABOVEGROUND STORAGE TANK (AST) SHALL BE INSTALLED AND PUT INTO SERVICE PRIOR TO THE DISCONNECTION OF THE EXISTING UST. THE UST SHALL BE FILLED WITH INERT FOAM APPROVED BY THE AUTHORITY HAVING JURISDICTION. ALL TANK OPENINGS SHALL BE SEALED AND ALL PIPING TO TANK SHALL BE REMOVED. REMOVE VENT RISER PIPING AND ASSOCIATED SUPPORTS. EXISTING FUEL IN UST SHALL BE REMOVED FROM EXISTING TANK TO WITHIN 2" OF THE BOTTOM OF THE TANK, FILTERED TO REMOVE ANY PARTICLES LARGER THAN 2 MICRONS AND WATER, AND SHALL BE PUMPED INTO NEW TANK. EXISTING IN GROUND MONITORING WELL AND DEVICES SHALL REMAIN.

EXISTING DAY TANK
INSPECT SUCTION PUMP AND CONTROLS AND VERIFY THE INTEGRITY OF ALL PIPING CONNECTIONS. CLEAN EXTERIOR OF DAY TANK, SUCTION PUMP, COVER, ETC. AND INSPECT TANK FOR RUST OR CORROSION. ALL RUST SHALL BE REMOVED, AND EXPOSED METAL SHALL BE PRIMED AND PAINTED.

HURRICANE PREPAREDNESS PLAN
CONTRACTOR SHALL SUBMIT A HURRICANE PREPAREDNESS PLAN OUTLINING THE SCHEDULE FOR COMPLETION AND SECURING SITE IN HURRICANE EVENT. NO WORK SHALL BE PERFORMED DURING A HURRICANE EVENT, OR WHEN A NAMED STORM HAS A PROJECTED LANDFALL WITHIN THE STATE OF FLORIDA WITHIN 48 HOURS.

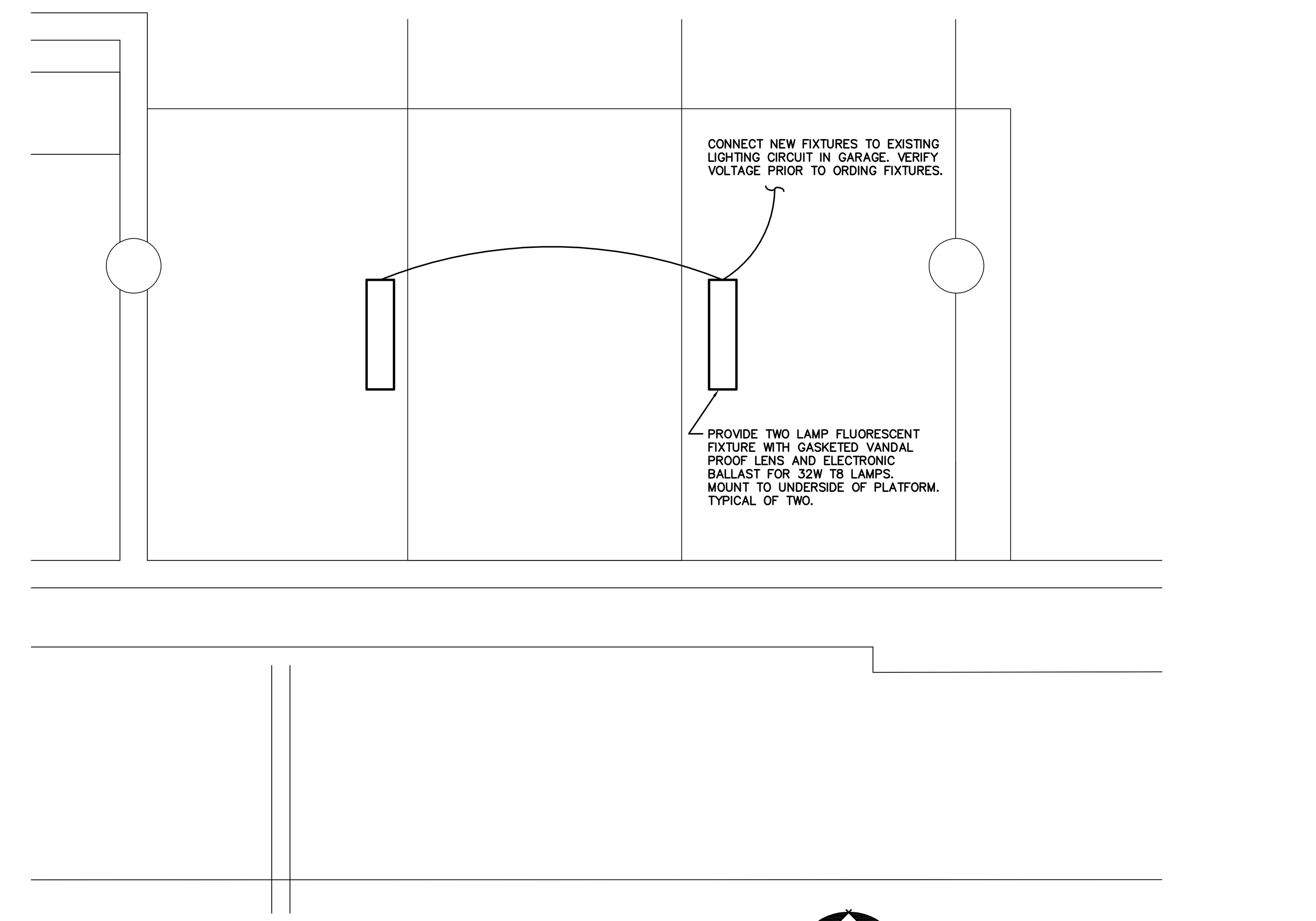

LIGHTING PLAN
SCALE: 1/4"=1'–0"

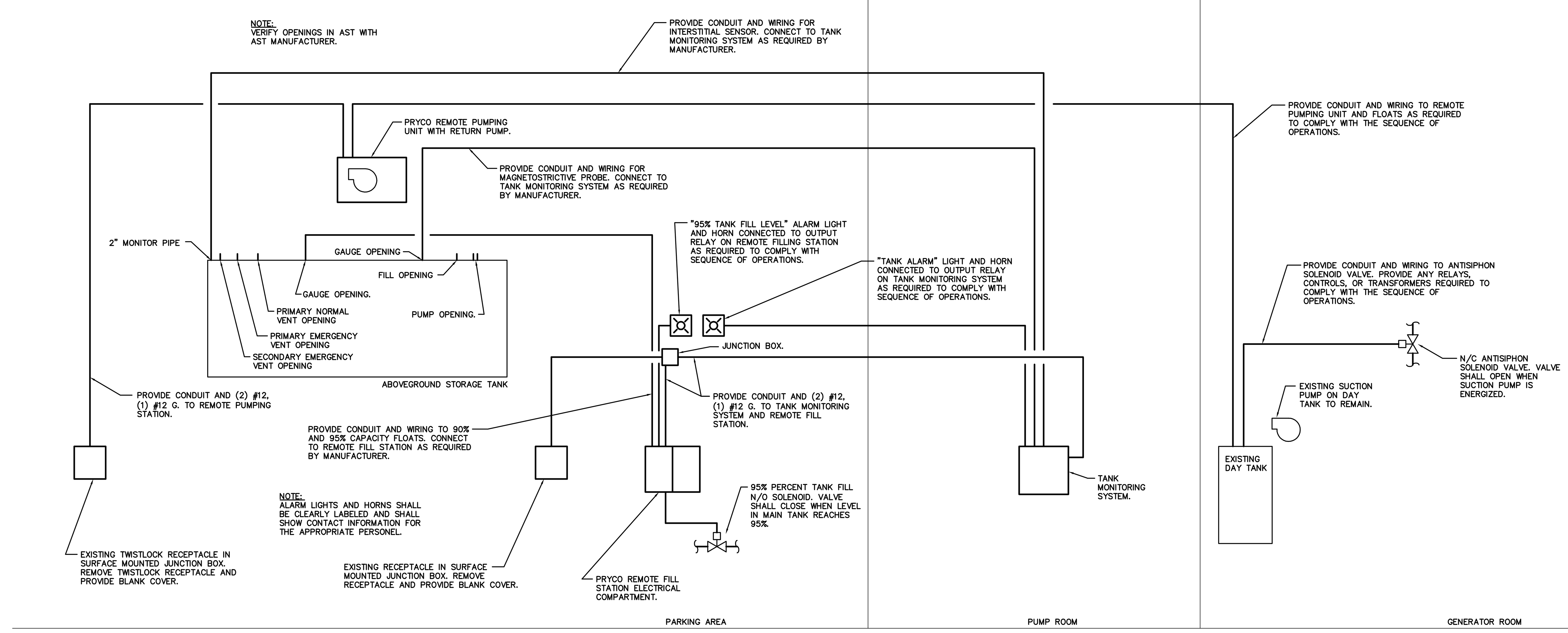

WIRING AND CONDUIT SCHEMATIC

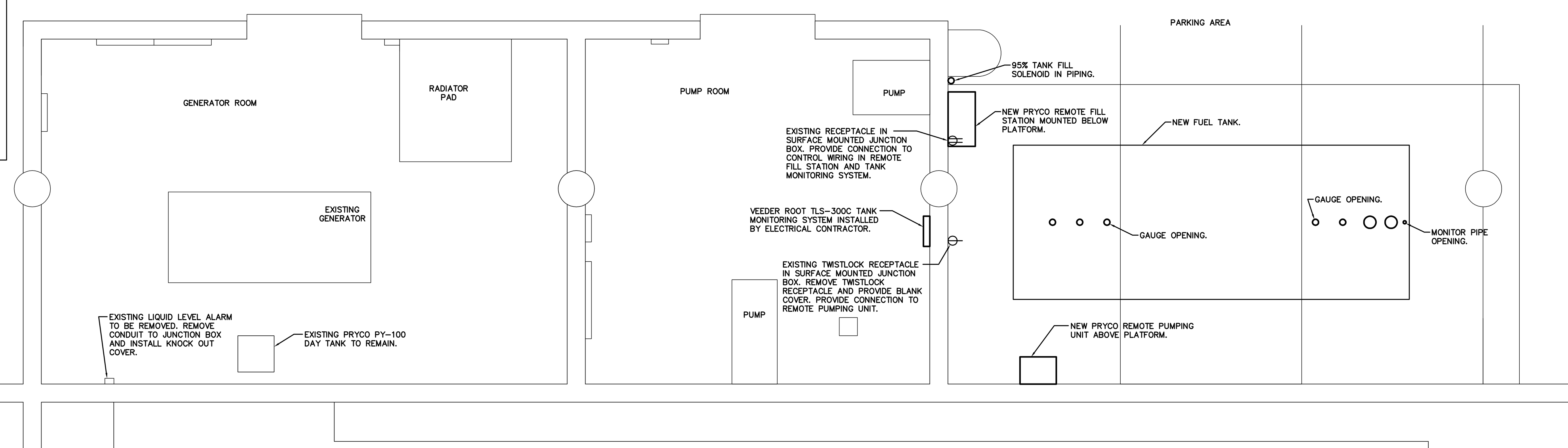

ELECTRICAL PLAN
SCALE: 1/4"=1'–0"

FORNEY ENGINEERING, INC.
MECHANICAL & ELECTRICAL CONSULTING ENGINEERS
5213 FOURTH AVE. CIRCLE EAST, BRADENTON, FL. 34208 C.O.A. #4049
PHONE (941) 748–5884 FAX (941) 747–6240 E–MAIL fei@forneyengineering.com

COPYRIGHT 2007, FORNEY ENGINEERING, INC. ALL RIGHTS RESERVED

MANATEE COUNTY ADMINISTRATION FUEL TANK
1112 MANATEE AVENUE WEST
BRADENTON, FL 34206

TO THE BEST OF MY KNOWLEDGE, SAID PLANS AND SPECIFICATIONS COMPLY WITH ALL APPLICABLE BUILDING CODES.
BY: GERARD L. ABRAMS 47786
DATE:
S E A L

REV. #	DATE

JOB NO. : 08-2156
DATE : 5-14-09
DRAWN BY : NJM
CHECKED BY : NJM
SHEET No. : E–1

FIRE PROTECTION HYDRAULIC NODE SITE PLAN – SEE CIVIL PLANS FOR CONSTRUCTION DETAILS

(TO BE USED FOR HYDRAULIC NODE REFERENCE ONLY)

SCALE: 1" = 40'

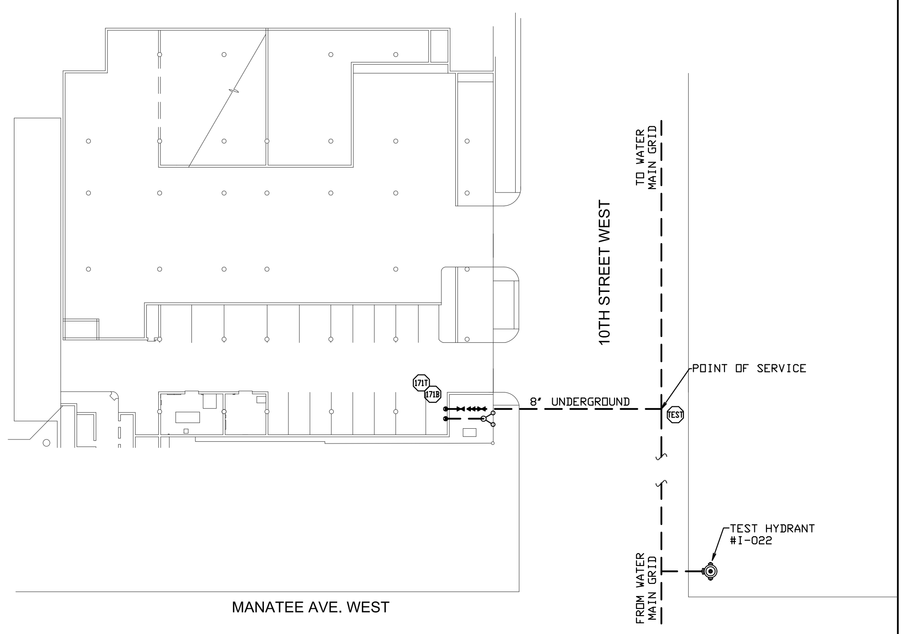

FIRE PROTECTION WATER SUPPLY	
☒ PUBLIC ☐ PUBLIC + PUMP ☐ FIRE PUMP ☐ OTHER	
PUBLIC FLOW TEST: STATIC = 58 RESIDUAL = 42 FLOW = 978	
SOURCE OF TEST: CITY OF BRADENTON FIRE DEPARTMENT	
DATE OF TEST: 4-26-2009	
TEST LOCATION: HYDRANT #1-022	
FIRE PUMP DATA: N/A RATED GPM = N/A	RATED PSI = N/A
STORAGE TANK SIZE: N/A	MISC. NOTE:

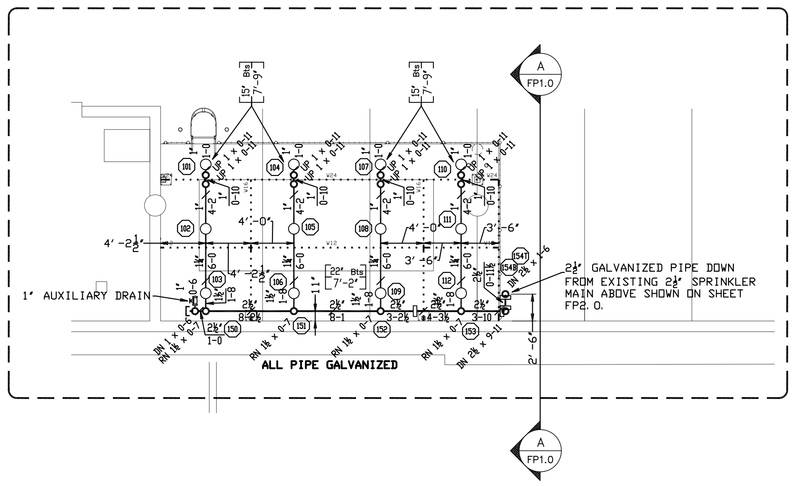

MANATEE COUNTY - ADMIN BLDG - UNDER PLATFORM

SCALE: 1/8" = 1'-0

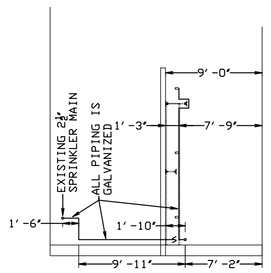

A-A / FP1.0 MANATEE COUNTY - ADMIN BLDG - DIESEL TANK
SCALE: 1/8" = 1'-0

PIPING LEGEND	
X" / X-X	SOLID LINE REPRESENTS NEW PIPING. SEE PLAN FOR SIZES.
X"	EXISTING SPRINKLER PIPE. SEE PLAN FOR PIPE SIZES.

FIRE SPRINKLER GENERAL NOTES AND SPECIFICATIONS

I. GENERAL PROJECT SCOPE

THE PROJECT INVOLVES THE INSTALLATION OF A NEW FIRE SPRINKLER SYSTEM TO PROTECT UNDER A NEW PLATFORM IN AN EXISTING GARAGE. THE SUPPLY FOR THE FIRE SPRINKLER PIPING WILL COME FROM THE EXISTING OVERHEAD SYSTEM IN THE PARKING GARAGE. THE BUILDING'S SPRINKLER SYSTEM IS FED FROM AN EXISTING ELECTRIC FIRE PUMP RATED FOR 1000 GPM @ 120 PSI.

II. DESIGN PARAMETERS

A. THE FIRE SPRINKLER PLAN SHALL CONFORM TO NFPA-13 (2002 EDITION) AND THE 2007 FLORIDA FIRE PREVENTION CODE. THE FIRE SPRINKLER CONTRACTOR SHALL COMPLY WITH ALL APPLICABLE REQUIREMENTS OF THE REFERENCED CODES. DEVIATIONS OR ABNORMAL CONDITIONS THAT WOULD RESULT IN NON-CODE OR STANDARD COMPLIANCE SHALL BE BROUGHT TO THE ATTENTION OF THE ENGINEER IN WRITING FOR ASSISTANCE IN THE RESOLUTION OF THE PROBLEM.

B. UNDER PLATFORM AREA: THIS AREA IS PROTECTED AS ORDINARY HAZARD GROUP 1 FOR PARKING GARAGES. A SPRINKLER SYSTEM SHALL BE CALCULATED FOR A 0.15 GPM/SQ.FT. OVER THE ENTIRE AREA. A HOSE DEMAND OF 250 GPM SHALL BE INCLUDED IN THE CALCULATIONS. THE EXISTING SPRINKLER SYSTEM IS FEED BY A FIRE PUMP.

C. ALL HANGERS TO BE ACCORDANCE WITH NFPA-13.

D. THIS AREA IS NOT KNOWN TO HAVE PROBLEMS WITH MICROBIAL INDUCED CORROSION. NO PREVENTATIVE MEASURES HAVE BEEN DESIGNED INTO THIS SYSTEM.

E. THE ENGINEER HAS OBSERVED THE ROOF FRAMING DESIGN AND IS SATISFIED THAT THE SPRINKLER PIPING CAN BE SAFELY SUPPORTED FROM THE STRUCTURE.

F. CONTRACTOR SUBMITTALS WHICH DEVIATE FROM THE DESIGN SHOWN IN THIS PLAN SET SHALL BE CONSIDERED A MATERIAL DEVIATION. ALL MATERIAL DEVIATIONS REQUIRE THE APPROVAL OF THE ENGINEER OF RECORD AND THE LOCAL AUTHORITY HAVING JURISDICTION.

III. MATERIALS

A. ALL FIRE PROTECTION EQUIPMENT AND MATERIALS SHALL BE U.L. LISTED (WHEN APPLICABLE).
B. ALL SCREWED FITTINGS ARE TO BE GALVANIZED CLASS 125 CAST IRON OR CLASS 150 MALLEABLE IRON.
C. GALVANIZED GROOVED FITTINGS ARE TO BE UL LISTED FOR FIRE PROTECTION SERVICE AND RATED FOR 175 PSI SERVICE.
D. ALL THREADED PIPE IS TO BE GALVANIZED, SCHEDULE 40. USE OF THREADABLE LIGHTWALL PIPE WITH SCREWED FITTINGS SHALL NOT BE PERMITTED.
E. NORMALLY EMPTY PIPE (DRAINS, ETC.), SHALL BE SCHEDULE 40 GALVANIZED PIPE WITH GROOVED OR SCREWED GALVANIZED FITTINGS.
F. SPRINKLER HEADS SHOWN ON THIS SHEET OR IN THIS PLAN SET SHALL BE THE BASIS OF THE DESIGN. EQUAL CORDSSION RESISTANT HEADS BY OTHER MANUFACTURERS WILL BE EVALUATED AND APPROVED IF FUNCTIONALLY EQUIVALENT.

IV. PROJECT REQUIREMENTS

1. THE FIRE SPRINKLER CONTRACTOR SHALL PREPARE A 'MATERIAL SUBMITTAL PACKAGE', AND SUBMIT TO THE ENGINEER AND AUTHORITY HAVING JURISDICTION, FOR APPROVAL. THE FIRE SPRINKLER CONTRACTOR MAY ELECT TO RESUBMIT THE ENGINEERING DRAWINGS WITH HIS COMPANY INFORMATION SUBSTITUTED FOR THE ENGINEER OF RECORD. THE USE OF THE ENGINEERS DRAWINGS FOR SHOP DRAWINGS DOES NOT RELIEVE THE CONTRACTOR OF THE RESPONSIBILITY FOR FIELD COORDINATION AS WOULD BE REQUIRED IF HE HAD PRODUCED SHOP DRAWINGS FROM SCRATCH. THE CONTRACTOR SHALL VERIFY ALL QUANTITIES DURING THE BIDDING PHASE AND IMMEDIATELY NOTIFY THE ENGINEER IN WRITING SO THAT A RESOLUTION CAN BE FORMULATED. THE ENGINEER OF RECORD SHALL FURNISH THE FIRE SPRINKLER CONTRACTOR WITH AUTOCAD VERSION 2004 DRAWINGS PREPARED WITH HYDRACAD SPRINKLER DESIGN SOFTWARE FOR USE IN MAKING WORKING DRAWINGS AND AS-BUILTS. THE ENGINEER WILL NOT CONVERT THE DRAWINGS TO AUTOCAD 14 OR EARLIER RELEASES OF AUTOCAD.

2. THE FIRE PROTECTION ENGINEER OF RECORD SHALL FURNISH THE FIRE SPRINKLER CONTRACTOR, UP TO FOUR (4) SETS OF ENGINEERING DRAWING BLUEPRINTS BEARING THE SEAL OF THE ENGINEER, FOR PERMITTING SHOP DRAWINGS. THE SHOP DRAWINGS SHALL BE REVIEWED BY THE ENGINEER AND STAMPED 'APPROVED', 'APPROVED AS NOTED', OR 'REJECTED'. THE ENGINEER SHALL NOT SIGN AND SEAL ANY SHOP DRAWINGS (IN VIOLATION OF STATE LAW). THE CONTRACTOR MAY ELECT TO RESUBMIT THE ENGINEERING DRAWINGS WITH HIS(HER) TITLE BLOCK (SUBSTITUTED FOR THE ENGINEER AND ARCHITECT'S TITLE BLOCK), ALONG WITH ADDED FABRICATION AND COORDINATION NOTES.

3. SPRINKLER CONTRACTOR IS RESPONSIBLE FOR MAINTAINING AS-BUILTS. THE CONTRACTOR SHALL SUPPLY THE OWNER WITH AS-BUILT DRAWINGS AND SHALL PROVIDE UPDATED CAD FILES TO THE ENGINEER OF RECORD IN AUTOCAD.

4. A NOMINAL QUANTITY OF ADDITIONAL SPRINKLERS MAY BE REQUIRED TO CORRECT FIELD OBSTRUCTIONS OR PARTITION CHANGES. THE FIRE SPRINKLER SHALL INSTALL THE THE REQUIRED ADDITIONAL HEADS FOR A FLAT RATE OF 150 DOLLARS PER HEAD (INCLUDES MATERIAL, LABOR, AND MARKUP).

5. NO UNDERGROUND PIPING WORK IS REQUIRED FOR THIS PROJECT.

6. ALL PENETRATIONS THROUGH RATED WALLS/FLOORS SHALL BE FIRE STOPPED/WATERPROOFED TO MATCH THE RATING OF THE WALL/FLOOR.

C. COMPLETION AND TESTING REQUIREMENTS

1. THE FIRE SPRINKLER SYSTEM SHALL BE PRESSURE TESTED AT 200 PSI FOR 2 HOURS IN ACCORDANCE WITH NFPA 13. THE SYSTEM SHALL MAINTAIN THE TEST PRESSURE FOR THE REQUIRED PERIOD WITHOUT LOSS. ALL REQUIREMENTS OF CHAPTER 16 OF NFPA 13 'SYSTEM ACCEPTANCE' SHALL BE COMPLETED BY THE INSTALLING FIRE SPRINKLER CONTRACTOR.

2. CONTRACTOR'S MATERIAL AND TEST CERTIFICATION DOCUMENTS SHALL BE COMPLETED FOR THIS PROJECT AND DELIVERED TO THE AUTHORITY MAKING THE FINAL INSPECTION.

3. THE CONTRACTOR SHALL PROVIDE A COPY OF NFPA 25 AND MANUFACTURERS EQUIPMENT AND MAINTENANCE CUTSHEETS TO THE OWNER, UPON COMPLETION OF THE WORK AND AS PART OF THE APPLICATION FOR PAYMENT.

4. A HYDRAULIC PLACARD SHALL BE INSTALLED IN THE FIRE SPRINKLER RISER FOR THE TENANT SPACE IMPROVEMENTS. THE PLACARD SHALL BE OF NON-CORROSIVE MATERIALS AND THE DATA MUST BE STAMPED INTO THE METAL SURFACE USING METAL STAMPS WITH ¼" HIGH LETTERING. USE OF MARKING PENS FOR COMPLETING THE DATA SHALL BE GROUNDS FOR AN INSPECTION FAILURE.

PIPE SUPPORT – TYPE C01

DROP-IN ANCHOR ATTACHMENT W/RING HGR

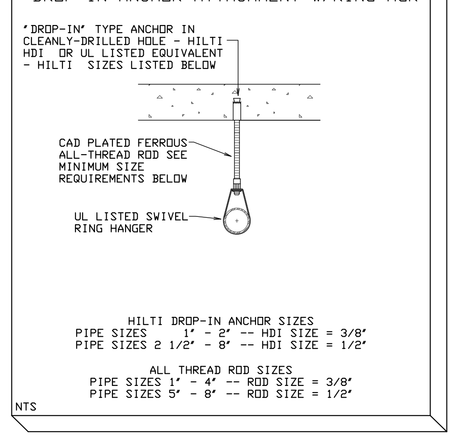

PIPE SUPPORT – TYPE S01

TOP BEAM CLAMP WITH RING HANGER

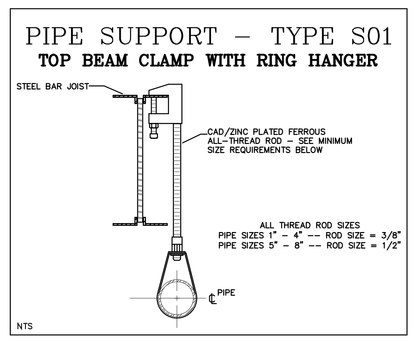

THE SPRINKLER HEAD COUNT SHOWN ON THIS PLAN SHALL BE CONSIDERED APPROXIMATE UNTIL VERIFIED BY THE CONTRACTOR. ANY DESCREPANCY SHALL BE IMMEDIATELY BROUGHT TO THE ENGINEER'S ATTENTION

FITTING TAKEOUTS

IN ORDER TO MAINTAIN A MORE COMPLETE BID DOCUMENT, GROOVED COUPLINGS AND STANDARD GROOVED FITTINGS TAKE-OUTS HAVE BEEN SHOWN ON ALL OF THE HORIZONTAL RUNS OF BULK MAIN PIPING. ALL VERTICAL RUNS OF PIPE ARE SHOWN AS CENTER-TO-CENTER DIMENSIONS. IF THE INSTALLING CONTRACTOR WISHES TO USE ALTERNATE APPROVED FITTINGS IT IS HIS/HER RESPONSIBILITY TO ADJUST THE PIPING DIMENSIONS SHOWN BASED ON NEW TAKE-OUTS. IT IS ALSO THE CONTRACTORS RESPONSIBILITY TO VERIFY FITTING LOCATIONS AND QUANTITIES AT THE TIME OF BIDDING.

HYDRAULIC DESIGN DATA

SYSTEM OR CALC. ID.	SPECIFIC AREA PROTECTED	DENSITY (GPM/SQ. FT.)	DESIGN AREA (SQ. FT.)	HOSE ALLOW. (GPM) INSIDE/OUTSIDE	NUMBER OF HEADS CALCULATED	WATER DEMAND AT NODE "TEST" INCLUDING HOSE DEMAND (GPM @ PSI)	WATER DEMAND AT THE PUMP OUTLET (GPM @ PSI)	CALCULATION SAFETY FACTOR (PSI)
3157-1.WXF	UNDER PLATFORM	0.15	ENTIRE AREA	0 / 250	12	540.6 @ 52.6	290.6 @ 49.9	156.9

SPRINKLER HEADS – BASIS OF DESIGN

MANUF.	MODEL	TYPE	RESPONSE	"K"	NPT	MANUFACTURER SPRK ID #	TEMP.	FINISH	SYMBOL	QTY.	COMMENTS
TYCO	TY-B	UPRIGHT W/ HEAD GUARD	STANDARD	8.0	3/4"	TY4151	200°F	LEAD OR WHITE POLYESTER	○	12	LISTED EQUIVALENT CORROSION RESISTANT HEADS MAY BE SUBSTITUTED (ADD 1 SPARE HEADS)
PROVIDE CABINETS, SPARE HEADS & HEAD WRENCHES FOR EACH HEAD TYPE PER NFPA 13 – EXCLUDING DRY PENDENTS AND DRY SIDEWALLS										12	TOTAL NUMBER OF HEADS THIS JOB. (EXCLUDING SPARE HEADS)

ENGRS. SEAL

I HEREBY CERTIFY THAT THIS PLAN AND SPECIFICATION WAS PREPARED BY ME OR UNDER MY DIRECT SUPERVISION AND THAT I AM A DULY LICENSED PROFESSIONAL ENGINEER UNDER THE LAWS OF THE STATE OF FLORIDA AS SIGNIFIED BY MY HAND AND SEAL.

BRIAN R. FOSTER, #43938

NO.	DATE	BY	REVISIONS

© COPYRIGHT 2004 GLOBAL FIRE ENGINEERING, P.A.

PREPARED BY:
GLOBAL FIRE ENGINEERING, INC
8450 LINGER LODGE ROAD
BRADENTON, FL 34202
PHONE: (941)758-2551 FAX: (941)739-6383
E-MAIL: brfoster@global-fire.com EB LICENSE#: 6237
THE ENGINEER CERTIFIES THAT THIS PLAN, TO THE BEST OF HIS KNOWLEDGE MEETS THE APPLICABLE MINIMUM CODES AND STANDARDS AND WAS PREPARED BY HIM OR UNDER HIS DIRECT SUPERVISION.

PREPARED FOR:
FORNEY ENGINEERING, INC
5213 4th Avenue Circle East
BRADENTON, FL 34208

PROJECT
MANATEE COUNTY – ADMIN BLDG
DIESEL FUEL TANK REPLACEMENT
1112 MANATEE AVE. WEST, BRADENTON, FLORIDA

DESCRIPTION:
FIRE SPRINKLER SPECIFICATIONS, DETAILS AND PLANS

DATE: 05/14/09

SCALE: AS NOTED

GFE Job No. 3157-09

Drawn By JARROD POORMAN

Sheet No. FP1.0

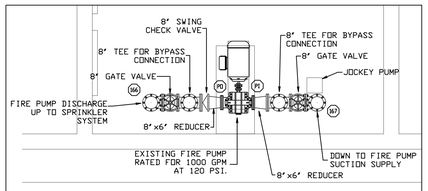

FIRE PUMP DETAIL
SCALE: 1/4" = 1'-0

MANATEE COUNTY - ADMIN BLDG - ROOF PLAN
SCALE: 1/8" = 1'-0

ENGRS. SEAL
I HEREBY CERTIFY THAT THIS PLAN AND SPECIFICATION WAS PREPARED BY ME OR UNDER MY DIRECT SUPERVISION AND THAT I AM A DULY REGISTERED ENGINEER UNDER THE LAWS OF THE STATE OF FLORIDA AS SIGNIFIED BY MY HAND AND SEAL.
BRIAN R. FOSTER, #43938

NO.	DATE	BY	REVISIONS

©COPYRIGHT 2004 GLOBAL FIRE ENGINEERING, P.A.

PREPARED BY:
GLOBAL FIRE ENGINEERING, INC
8401 LAKEWOOD RANCH BLVD
BRADENTON, FL 34202
PHONE: (941)758-2551 FAX: (941)739-6383
E-MAIL: brfoster@global-fire.com EB LICENSE#: 6237
THE ENGINEER CERTIFIES THAT THIS PLAN, TO THE BEST OF HIS KNOWLEDGE MEETS THE APPLICABLE MINIMUM CODES AND STANDARDS AND WAS PREPARED BY HIM OR UNDER HIS DIRECT SUPERVISION.

PREPARED FOR:
FORNEY ENGINEERING, INC
5213 4th Avenue Circle East
BRADENTON, FL 34208

PROJECT
MANATEE COUNTY – ADMIN BLDG
DIESEL FUEL TANK REPLACEMENT
1112 MANATEE AVE. WEST, BRADENTON, FLORIDA

DESCRIPTION:
FIRE SPRINKLER ROOF PLAN

DATE: 05/14/09

SCALE: AS NOTED

GFE Job No. 3157-09

Drawn By JARROD POORMAN

Sheet No. FP2.0

MECHANICAL SPECIFICATIONS

MECHANICAL

SCOPE OF WORK AND GENERAL CONDITIONS

THE WORK COVERED INCLUDES ALL LABOR, MATERIAL AND EQUIPMENT REQUIRED FOR FURNISHING, INSTALLING AND TESTING COMPLETE AND READY FOR OPERATION ALL THE WORK SHOWN ON THE MECHANICAL DRAWING AND AS SPECIFIED HEREIN, AND SHALL INCLUDE BUT NOT NECESSARILY BE LIMITED TO THE FOLLOWING ITEMS:

THE INSTALLATION OF A NEW MUFFLER AND EXHAUST PIPING AND ASSOCIATED COMPONENTS.

THE DEMOLITION OF EXISTING EXHAUST PIPING AND MUFFLER.

THE DESIGN AND CONSTRUCTION OF THIS PROJECT SHALL BE IN COMPLETE CONFORMANCE WITH THE FOLLOWING:

1. LIFE SAFETY CODE NFPA 101–2006.
2. NATIONAL ELECTRIC CODE NFPA 70–2005.
3. FLORIDA BUILDING CODE 2007, BUILDING.
4. FLORIDA BUILDING CODE 2007, MECHANICAL.
5. FLORIDA BUILDING CODE 2007, PLUMBING.
6. FLORIDA BUILDING CODE 2007, FUEL GAS.
7. FLORIDA ENERGY EFFICIENCY CODE FOR BUILDING CONSTRUCTION, 2007.
8. NFPA 30, NATIONAL FIRE PROTECTION ASSOCIATION FLAMMABLE AND COMBUSTIBLE CODE.

SUBMITTALS

SUBMITTALS ARE REQUIRED FOR ALL MATERIAL AND EQUIPMENT WHICH THE CONTRACTOR PROPOSES TO FURNISH. SHOP DRAWINGS MUST BE APPROVED BY THE ARCHITECT PRIOR TO ORDERING AND INSTALLING EQUIPMENT. DATA SHALL BE COMPILED IN BROCHURE FORM AND ALL SUBMITTED AT ONE TIME.

SHOP DRAWINGS OR CUT SHEETS REQUIRED, INCLUDE:

EXHAUST PIPE AND FITTINGS
INSULATION
MUFFLER
HANGERS
ANCHORS

PERMITS AND FEES

THE CONTRACTOR SHALL ARRANGE AND PAY FOR ALL PERMITS AND INSPECTIONS REQUIRED IN THIS WORK.

HANGERS AND INSERTS

PROVIDE A SUFFICIENT NUMBER OF HANGERS PROPERLY LOCATED TO SUPPORT THE PIPING AND EQUIPMENT. VERTICAL PIPE HANGERS SHALL BE OFFSET PIPE CLAMPS LOCATED 5'0" ON CENTER. HORIZONTAL PIPE HANGERS SHALL BE CLEVIS HANGERS.

THE SIZE OF THE HANGER SHALL BE SUITABLE FOR THE PIPE SIZE AND APPLICATION.

INSERTS REQUIRED IN EXISTING CONCRETE WORK, SHALL BE "RAMSETS" OR "LEAD TAMPIN" EXPANSION SHIELDS WITH EPOXY.

EXHAUST PIPING

UNINSULATED EXHAUST PIPING SHALL BE THE FOLLOWING:
STEEL, SCHEDULE 10

INSULATED EXHAUST PIPING SHALL BE THE FOLLOWING:
STEEL, SCHEDULE 10, WITH 3" CALCIUM SILICATE INSULATION WITH ALUMINUM JACKET

JOINTS SHALL BE WELDED ACCORDING TO AWS D10.12.

EXHAUST PIPE AND HANGERS SHALL BE PRIMED WITH A HEAT RESISTANT RUST INHIBITING PRIMER AND PAINTED TO MATCH EXISTING BUILDING FINISH WITH A HEAT RESISTANT PAINT. CLEAN AND DEGREASE PIPE AND HANGERS PRIOR TO PRIMING.

MUFFLER

MUFFLER SHALL BE A GTE INDUSTRIES #201–2112–2, 12" COMMERCIAL GRADE SILENCER, STYLE 2, 12" INLET/OUTLET, CARBON STEEL.

WARRANTY

ALL PARTS, MATERIAL, EQUIPMENT AND LABOR FURNISHED UNDER THIS SECTION OF THE SPECIFICATIONS SHALL BEAR A ONE (1) YEAR, NO COST TO THE OWNER, WARRANTY FROM DATE OF SUBSTANTIAL COMPLETION.

THE MECHANICAL CONTRACTOR SHALL PROVIDE ALL OF THE ABOVE WARRANTY REQUIREMENTS IN A WRITTEN STATEMENT ALONG WITH EQUIPMENT MANUFACTURER'S WARRANTIES.

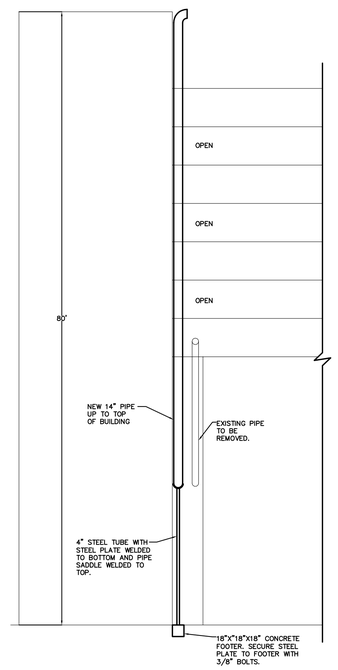

SOUTH PARKING GARAGE ELEVATION

SCALE: 1/8"=1'–0"

DEMOLITION NOTES:

SEE DEMOLITION NOTES ON SHEET E–1. CONTRACTOR SHALL REVIEW AND COMPLY WITH STATED REQUIREMENTS.

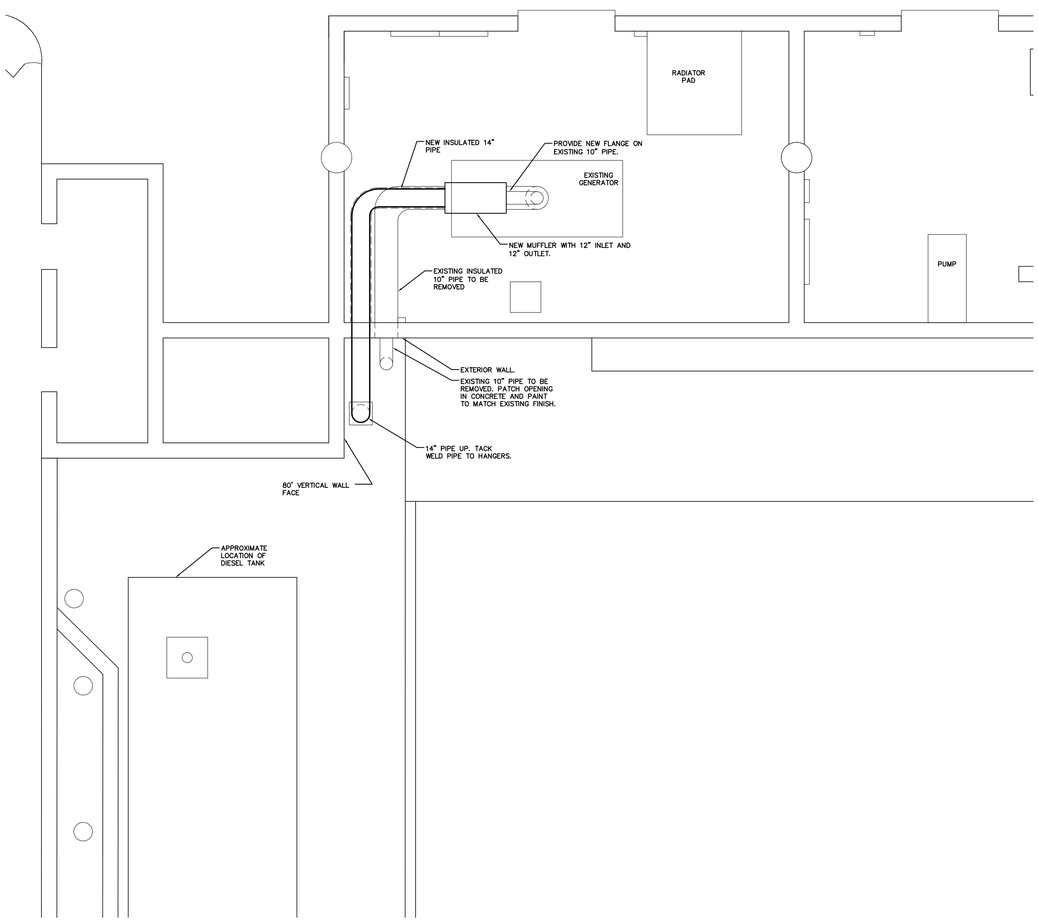

EXHAUST PIPING PLAN

SCALE: 1/4"=1'–0"

FORNEY ENGINEERING, INC.
MECHANICAL & ELECTRICAL CONSULTING ENGINEERS
5215 FOURTH AVE. CIRCLE EAST, BRADENTON, FL. 34208 C.O.A. #4049
PHONE (941) 748-5884 FAX (941) 747-6240 E-MAIL fei@forneyengineering.com

COPYRIGHT 2007, FORNEY ENGINEERING, INC. ALL RIGHTS RESERVED

MANATEE COUNTY ADMINISTRATION FUEL TANK
1112 MANATEE AVENUE WEST
BRADENTON, FL 34206

TO THE BEST OF MY KNOWLEDGE, SAID PLANS AND SPECIFICATIONS COMPLY WITH ALL APPLICABLE BUILDING CODES.

BY _____
GERARD L. ABRAMS
47786

DATE: _____

S E A L

REV. #	DATE

JOB NO. : 08-2156
DATE : 5-14-09
DRAWN BY : NJM
CHECKED BY : NJM
SHEET No. :
M–1