SATELLITE LIFT STATION R&R
2024 GROUP 1
402-0019707 / 5001301

BID PLANS

October 2023

L.S. NAME	RTU	ADDRESS	PROJECT JL NO.	INFLUENT MH
12–D	221	7830 DESOTO MEMORIAL DR., BRADENTON	402–5163888	PUBLIC
SR–70	381	5236 45TH ST. E., BRADENTON	402–5163887	PUBLIC
RIVERWOODS 1	564	3202 RIVERWOODS DR., PARRISH	402–5163886	PUBLIC
KINGSFIELDS GROVES 1	572	11710 OLD TAMPA RD., PARRISH	402–5163885	PUBLIC

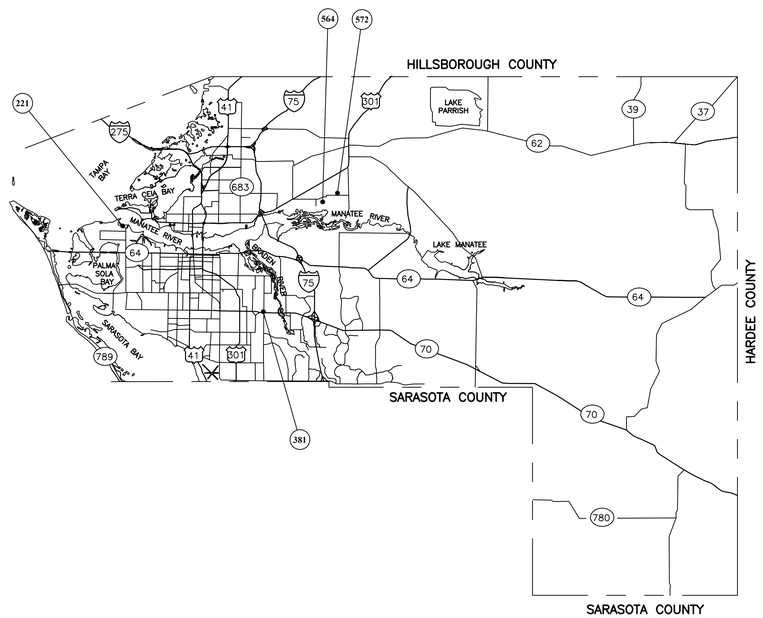

NO.	INDEX OF SHEETS
01	COVER
02	GENERAL NOTES & LEGEND
03	VICINTIY MAPS
04	12–D, RTU 221
05	SR–70, RTU 381
06	RIVERWOODS 1, RTU 564
07	KINGSFIELD GROVES 1, RTU 572
08	DETAILS1
09	DETAILS2
10	DETAILS3
11	EROSION CONTROL DETAILS

PROJECT DESCRIPTION

REHABILITATE SEWAGE LIFT STATIONS (AND/OR MANHOLES) TO REDUCE RISK TO PUBLIC HEALTH AND ENVIRONMENTAL POLLUTION. THE WORK SHALL CONSIST OF, BUT NOT LIMITED TO, UPGRADE OR FULL REPLACEMENT OF THE ELECTRICAL CONTROL EQUIPMENT, WET WELL CLEANING, THE REPLACEMENT OF DISCHARGE PIPING, FITTINGS, VALVES, SWING CHECK VALVES, GUIDE RAILS, PIPE BRACINGS, BASE ELLS, AND/OR MOUNTING PLATES. WET WELL LINER MAY NEED TO BE INSTALLED, REPAIRED OR REPLACED. SEE INDIVIDUAL PLAN SHEETS FOR SPECIFIC REHABILITATION AND INSTALLATIONS REQUIREMENTS FOR EACH LIFT STATION.

811
Know what's below
Call before you dig

PUBLIC WORKS DEPARTMENT
ENGINEERING SERVICES
1022 26th Avenue East, Bradenton, FL 34208

SATELLITE LIFT STATION R&R
2024 GROUP 1
COVER

NO.	REVISION DESCRIPTION	BY	DATE

PROJECT #	402–0019707 / 5001301
SURVEY #	NA
SEC./TWN./RGE	VARIES
SCALE	N.T.S.

	BY	DATE
SURVEYED	NA	NA
DESIGNED	JSS	5/2023
DRAWN	JKW	5/2023
CHECKED	JSS	–

JOHN SSISHOLDT, P.E.
LICENSED
FLORIDA P.E. # 60923
STATE OF FLORIDA
PROFESSIONAL ENGINEER
04/21/2023
Signature Date

SHEET 01 OF 11

H:\Civil Eng Design\Proj\~SAN SWR Proj\San Swr – LS Upgrades\LS R&R 2024 Group 1\DWGS\LS R&R 2024-1.dwg\COVER, 9/21/2023 8:47 AM Kyle Wright, 1:1, ANSI full bleed D (34.00 x 22.00 inches), WC-2016.stb

GENERAL

1. ALL CONSTRUCTION ACTIVITIES SHALL BE COORDINATED WITH THE PROJECT MANAGEMENT DIVISION.
THE PROJECT MANAGER IS: ANTHONY BENITEZ, P.E. AND CAN BE REACHED AT 941.708.7450 x7333.

2. SITE VISITS ARE MANDATORY FOR ALL BIDDERS.

3. ALL CONSTRUCTION ON THIS PROJECT SHALL BE IN ACCORDANCE WITH **THE LATEST EDITION OF MANATEE COUNTY UTILITY AND TRANSPORTATION STANDARDS** AND/OR FDOT "STANDARD SPECIFICATIONS FOR ROAD AND BRIDGE CONSTRUCTION" UNLESS OTHERWISE INDICATED ON THE PLANS.

4. THE CONTRACTOR SHALL BE RESPONSIBLE FOR MEETING ALL CONDITIONS AND REQUIREMENTS OF ALL PERMITS AND ALL GOVERNING FEDERAL, STATE, AND LOCAL AGENCIES. THE CONTRACTOR SHALL OBTAIN AND PAY FOR ALL REQUIRED PERMITS THAT ARE NOT PROVIDED IN THE BID DOCUMENTS, AT NO ADDITIONAL COST TO THE OWNER.

5. THE INFORMATION PROVIDED IN THESE PLANS IS SOLELY TO ASSIST THE CONTRACTOR IN ASSESSING THE NATURE AND EXTENT OF THE CONDITIONS WHICH MAY BE ENCOUNTERED DURING THE COURSE OF WORK. ALL CONTRACTORS ARE DIRECTED, PRIOR TO BIDDING, TO CONDUCT WHATEVER INVESTIGATION THEY MAY DEEM NECESSARY TO ARRIVE AT THEIR OWN CONCLUSIONS REGARDING THE ACTUAL CONDITIONS THAT WILL BE ENCOUNTERED, AND UPON WHICH THEIR BIDS WILL BE BASED.

6. THE CONTRACTOR SHALL REVIEW AND VERIFY ALL DIMENSIONS ON THE PLANS AND REVIEW ALL FIELD CONDITIONS THAT MAY AFFECT CONSTRUCTION. SHOULD DISCREPANCIES OCCUR, THE CONTRACTOR SHALL NOTIFY THE ENGINEER TO OBTAIN THE ENGINEER'S CLARIFICATION BEFORE COMMENCING WITH CONSTRUCTION.

7. AT LEAST 48 HOURS PRIOR TO ANY EXCAVATION, THE CONTRACTOR SHALL CONTACT SUNSHINE STATE ONE CALL OF FLORIDA AT 1-800-432-4770 OR THE NATIONAL 811 ONE CALL NUMBER WHEN APPLICABLE FOR UTILITY LOCATIONS. THE CONTRACTOR SHALL BE RESPONSIBLE FOR COORDINATING WITH ALL UTILITIES FOR THE POSSIBLE RELOCATION OR THE TEMPORARY MOVEMENT OF ANY EXISTING UTILITIES WITHIN THE RIGHTS-OF-WAY.

8. NO WORK, EXCEPT FOR EMERGENCY TYPE, SHALL BE PERFORMED AFTER 7:00 PM AND BEFORE 7:00 AM. FOR ADDITIONAL PROJECT RESTRAINTS, REFER TO SECTION 01310 OF THE SPECIFICATIONS.

SAFETY

9. THE CONTRACTOR SHALL BE RESPONSIBLE FOR COMPLIANCE WITH THE FLORIDA TRENCH SAFETY ACT, 90-96, LAWS OF FLORIDA EFFECTIVE OCTOBER 1, 1990 AND THE OCCUPATIONAL SAFETY AND HEALTH ADMINISTRATION EXCAVATION SAFETY STANDARDS, 29 CFR 1926.650, SUBPART P, AS AMENDED. THE CONTRACTOR SHALL INCLUDE IN THE TOTAL BID PRICE ALL COSTS FOR COMPLIANCE WITH THESE REGULATIONS.

10. THE CONTRACTOR SHALL USE SHEET PILING, SHEETING, BRACING, ETC., AS REQUIRED IN ALL EXCAVATION AREAS AND CONFORM TO ALL OSHA REQUIREMENTS.

11. THE CONTRACTOR SHALL USE ALL NECESSARY SAFETY PRECAUTIONS TO AVOID CONTACT WITH OVERHEAD AND UNDERGROUND UTILITIES, POWER LINES, ETC.

12. THESE DRAWINGS DO NOT INCLUDE NECESSARY COMPONENTS FOR CONSTRUCTION SAFETY. THIS EXCLUSION DOES NOT ALLEVIATE THE CONTRACTOR FOR PROVIDING A CONTINUOUS SAFE WORKSPACE.

ENVIRONMENTAL

13. THE CONTRACTOR SHALL PROVIDE AND INSTALL ALL NECESSARY STORM WATER, EROSION, AND SEDIMENTATION CONTROL MEASURES IN ACCORDANCE WITH THE FDEP "FLORIDA STORM WATER, EROSION AND SEDIMENTATION CONTROL INSPECTOR'S MANUAL". IT IS THE RESPONSIBILITY OF THE CONTRACTOR TO CONTROL AND PREVENT EROSION AND TRANSPORT OF SEDIMENT TO SURFACE DRAINS AND TO DITCHES DURING CONSTRUCTION.

14. STOCKPILES SHALL BE PROTECTED AT ALL TIMES BY ON-SITE DRAINAGE CONTROLS WHICH PREVENT EROSION OF THE STOCKPILED MATERIAL. CONTROL OF DUST FROM SUCH STOCKPILES IS REQUIRED, DEPENDING UPON THEIR LOCATION AND THE EXPECTED LENGTH OF TIME THE STOCKPILES WILL BE PRESENT. IN NO CASE SHALL ANY STOCKPILED MATERIAL REMAIN AFTER THIRTY (30) CALENDAR DAYS.

15. STORM WATER INLETS IN THE VICINITY OF THE PROJECT SHALL BE PROTECTED BY SEDIMENT TRAPS SUCH AS SECURED HAY BALES, SOD, STONE, ETC., WHICH SHALL BE MAINTAINED AND MODIFIED AS REQUIRED BY CONSTRUCTION PROGRESS, AND WHICH MUST BE APPROVED BY THE ENGINEER BEFORE INSTALLATION. THIS WILL BE MAINTAINED TO PREVENT DEGRADATION OF THE WATERS OF THE COUNTY AND STATE.

16. SEDIMENT BASINS AND TRAPS, PERIMETER BERMS, SEDIMENT BARRIERS, VEGETATIVE BUFFERS, AND OTHER MEASURES INTENDED TO TRAP SEDIMENT AND/OR PREVENT THE TRANSPORT OF SEDIMENT ONTO ADJACENT PROPERTIES, OR INTO EXISTING BODIES OF WATER, MUST BE INSTALLED, CONSTRUCTED, OR IN THE CASE OF VEGETATIVE BUFFERS, PROTECTED FROM DISTURBANCE, AS A FIRST STEP IN THE LAND ALTERATION PROCESS. SUCH SYSTEMS SHALL BE FULLY OPERATIVE BEFORE ANY OTHER DISTURBANCE OF THE SITE BEGINS. EARTHEN STRUCTURES INCLUDING BUT NOT LIMITED TO BERMS, EARTH FILTERS, DAMS OR DIKES SHALL BE STABILIZED AND PROTECTED FROM DRAINAGE DAMAGE OR EROSION WITHIN ONE (1) WEEK OF INSTALLATION.

17. ALL SWALES, DITCHES, AND CHANNELS LEADING FROM THE SITE SHALL BE PROTECTED FROM SILTATION AND EROSION DURING CONSTRUCTION AND BE SODDED WITHIN THREE (3) DAYS OF EXCAVATION.

18. SOIL DISPLACED BY CONSTRUCTION WILL BE REMOVED. EROSION CONTROL SHALL BE IMPLEMENTED IN AREAS WHICH ARE CONSIDERED ENVIRONMENTALLY SENSITIVE. EROSION CONTROL SYSTEMS SHALL BE REQUIRED FOR ALL WORK WITHIN JURISDICTIONAL AREAS. THESE SYSTEMS MAY INCLUDE STAKED HAY BALES, SILT SCREENS, FILTER FABRIC, AND TURBIDITY SCREENS.

19. ALL EROSION AND POLLUTION CONTROL DEVICES SHALL BE CHECKED REGULARLY, ESPECIALLY AFTER EACH RAINFALL AND SHALL BE CLEANED OUT AND/OR REPAIRED AS REQUIRED.

20. THE CONTRACTOR SHALL NOT ENTER UPON OR IN ANY WAY ALTER WETLAND AREAS THAT MAY BE ON OR NEAR THE CONSTRUCTION SITE. ALL WORK IN THE VICINITY OF OPEN WATER AND/OR WETLANDS IS TO BE PERFORMED IN COMPLIANCE WITH THE ENVIRONMENTAL REGULATIONS AND/OR PERMITS FOR THE SITE. THE CONTRACTOR WILL BE RESPONSIBLE FOR ANY FINES RESULTING FROM HIS VIOLATION OF ANY REGULATIONS OR PERMIT CONDITIONS.

21. FOR MORE INFORMATION, SEE THE EROSION CONTROL DETAIL SHEET INCLUDED IN THE PLANS.

RIGHT-OF-WAY

22. ALL CONSTRUCTION ACTIVITIES SHALL BE LIMITED TO WITHIN THE MANATEE COUNTY/FDOT RIGHT-OF-WAY AND/OR EASEMENTS SHOWN ON THE DRAWINGS.

23. THE CONTRACTOR SHALL EMPLOY A LAND SURVEYOR REGISTERED IN THE STATE OF FLORIDA TO REFERENCE AND RESTORE PROPERTY CORNER MONUMENTS, PINS, AND LANDMARKS THAT MAY BE DISTURBED BY CONSTRUCTION AT NO ADDITIONAL COST TO THE OWNER.

24. THE CONTRACTOR, PRIOR TO CONSTRUCTION AND RESTRICTING ANY TRAFFIC, MUST OBTAIN A RIGHTS-OF-WAY USE PERMIT AND A TRAFFIC CONTROL PLAN. THE CONTRACTOR SHALL OBTAIN ALL REQUIRED PERMITS FROM OTHER GOVERNMENTAL AGENCIES HAVING RELEVANT JURISDICTION. ALL MAINTENANCE AND PROTECTION OF TRAFFIC SHALL BE IN ACCORDANCE WITH THE APPLICABLE REQUIREMENTS OF THE CURRENT FLORIDA DEPARTMENT OF TRANSPORTATION "MANUAL OF TRAFFIC CONTROL AND SAFE PRACTICES". A TRAFFIC CONTROL PLAN SHALL BE SUPPLIED BY THE CONTRACTOR AT THE PRE-CONSTRUCTION MEETING.

25. THE CONTRACTOR SHALL BE RESPONSIBLE FOR REPLACING ALL DAMAGED STORM WATER STRUCTURES, PIPING, ENTRANCE PIPE AND HEADWALLS WHETHER SHOWN ON THE PLANS OR NOT. THE HEADWALLS SHALL BE REPLACED IN ACCORDANCE WITH F.D.O.T. STANDARDS.

26. IT IS THE RESPONSIBILITY OF THE CONTRACTOR TO ESTABLISH IN THE FIELD THE RIGHT-OF-WAY LINES, BASE LINES, BENCH MARKS (ELEV.), CENTER LINES, AND STATIONING AS REQUIRED TO CONSTRUCT THIS PROJECT.

27. THE CONTRACTOR SHALL COORDINATE THE CUTTING OF DRIVEWAYS WITH THE PROPERTY OWNER PRIOR TO CUT. ALL DRIVEWAYS WILL BE IN PASSABLE CONDITION AT THE END OF THE WORK DAY AND FULLY RESTORED PER SECTION 02575.

28. A RIGHT OF ENTRY AGREEMENT SHALL BE OBTAINED BY THE PROJECT MANAGER FROM THE PROPERTY OWNER BEFORE ANY DRIVEWAY CONSTRUCTION WORK IS DONE OUTSIDE OF THE RIGHT-OF-WAY OR EASEMENT.

UTILITIES

29. ALL EXISTING FACILITIES IN THE PROJECT AREA SHALL REMAIN OPERATIONAL AND ACCESSIBLE BY COUNTY PERSONNEL AT ALL TIMES, I.E. VALVES, MANHOLE COVERS, ETC.

30. LOCATIONS, ELEVATIONS AND DIMENSIONS OF EXISTING UTILITIES, STRUCTURES AND OTHER FEATURES ARE SHOWN TO THE BEST INFORMATION AVAILABLE AT THE TIME OF PREPARATION OF THESE PLANS BUT DO NOT PURPORT TO BE ABSOLUTELY CORRECT. THERE MAY BE OTHER IMPROVEMENTS, UTILITIES, ETC. WHICH ARE WITHIN THE PROJECT AREA AND WHICH HAVE NOT BEEN LOCATED OR IDENTIFIED, MAY NOT BE IN THE EXACT LOCATION SHOWN OR RELOCATED SINCE THE PREPARATION OF THESE PLANS. THE CONTRACTOR SHALL VERIFY, PRIOR TO CONSTRUCTION, THE LOCATIONS, ELEVATIONS AND DIMENSIONS OF ALL EXISTING UTILITIES STRUCTURES AND OTHER FEATURES (WHETHER OR NOT SHOWN ON THE PLANS) THAT MAY EFFECT HIS WORK. ALL EXISTING UTILITIES TO BE EXTENDED, CROSSED OR CONNECTION POINTS SHALL BE EXPOSED PRIOR TO CONSTRUCTION TO VERIFY LOCATION AND ELEVATION. ANY DISCREPANCIES OR CONFLICTS FOUND SHALL BE BROUGHT TO THE ENGINEER'S ATTENTION FOR RESOLUTION.

31. THE CONTRACTOR SHALL PROTECT ALL EXISTING STRUCTURES, WATER/RECLAIM/SEWER LINES, STORM DRAINS, OTHER UTILITIES, DRIVEWAYS, SIDEWALKS, SIGNS, MAIL BOXES, FENCES, TREES, LANDSCAPING, AND ANY OTHER IMPROVEMENT OR FACILITY IN THE CONSTRUCTION AREA. THE CONTRACTOR SHALL REPAIR AND/OR REPLACE ANY DAMAGED ITEM DUE TO HIS CONSTRUCTION ACTIVITIES TO EQUAL OR BETTER THAN PRE-CONSTRUCTION CONDITIONS AT NO ADDITIONAL COST TO THE COUNTY. ALL EXISTING AND PROPOSED VALVE COVERS, RIMS, ETC, SHALL BE BROUGHT TO FINAL GRADE OF THE PROJECT AREA.

32. THE CONTRACTOR SHALL USE APPROPRIATE TECHNIQUES, AS APPROVED, RECOMMENDED, OR OFFERED BY AN EXISTING UTILITY, (I.E. FLORIDA POWER AND LIGHT) TO PREVENT UNDERMINING OF POWER POLES DURING CONSTRUCTION. IF HOLDING OF POWER POLES IS RECOMMENDED OR REQUIRED BY THE UTILITY, THE CONTRACTOR SHALL COORDINATE THIS ACTIVITY WITH THE UTILITY AND BEAR ANY RELATED COSTS.

33. ANY TEMPORARY SHUTDOWNS FOR MODIFICATIONS OF EXISTING UTILITY SYSTEMS THAT MUST REMAIN IN SERVICE DURING CONSTRUCTIONS SHALL BE KEPT TO A MINIMUM AND SHALL BE COORDINATED WITH AND APPROVED BY THE MANATEE COUNTY UTILITY OPERATIONS DEPARTMENT IN ACCORDANCE WITH THE CONTRACT DOCUMENTS. IT IS NOTED THAT TEMPORARY SHUTDOWNS MAY BE RESTRICTED TO CERTAIN HOURS AT ANY TIME OF THE DAY OR NIGHT AND WILL BE COMPLETED AT NO ADDITIONAL COST TO THE OWNER.

34. FOR WORK BEING DONE ON EXISTING SANITARY SEWER LINES, THE CONTRACTOR SHALL BE RESPONSIBLE FOR MAINTAINING THE FLOW OF ALL SEWAGE DURING CONSTRUCTION, WHICH MAY REQUIRE BY-PASS PUMPING AND/OR PUMPER TRUCKS. THE CONTRACTOR SHALL SUBMIT A DETAILED BY-PASS PUMPING PLAN PER SECTION 02720.

35. ALL WATER SERVICES TO BE INSTALLED OR MODIFIED ON PRIVATE PROPERTY SHALL REQUIRE A PLUMBING PERMIT;
   A. THE CONTRACTOR'S PLUMBER SHALL INSTALL A REDUCED PRESSURE (RP) TYPE BACKFLOW PREVENTION ASSEMBLIES (BPA'S) EQUIPPED WITH A PRESSURE RELIEF VALVE AT THE POTABLE WATER METER WHENEVER ANY OF THE FOLLOWING CONDITIONS EXIST AT A PROPERTY:
      - SWIMMING POOL,
      - IN-GROUND IRRIGATION SYSTEM OR UNDERGROUND SPRINKLERS,
      - SECONDARY SOURCE OF WATER (I.E. RECLAIMED WATER OR WELL),
      - PROPERTY THAT ABUTS A BODY OF WATER, INCLUDING RIVER, BAY, LAKE OR POND ON THE PROPERTY OR BORDERING THE PROPERTY,
      - FLOOD ZONE DESIGNATION, (IF ONLY FLOOD ZONE, INSTALL A DOUBLE CHECK BPA),
      - SOLAR WATER HEATING SYSTEM,
      - COMMERCIAL, INDUSTRIAL, MULTISTORY OR MULTIFAMILY RESIDENTIAL FACILITY,
      - CROSS CONNECTION IS FOUND,
      - FOUNTAIN WITH A DEDICATED FILL PIPE,
      - FIRE SPRINKLER SYSTEM.
   B. A LICENSED PLUMBER SHALL INSTALL THE BPA'S IN ACCORDANCE WITH THE CURRENT FLORIDA PLUMBING CODE AND MANATEE COUNTY CODE OF ORDINANCES, AND SHALL SELECT A PRESSURE RELIEF VALVE WITH AN APPROPRIATE PRESSURE SET POINT TO PROTECT THE CUSTOMERS' PLUMBING AND NOT ALLOW EXCESSIVE LEAKAGE DUE TO SYSTEM SUPPLY PRESSURE. A PRESSURE REDUCING VALVE MAY BE NECESSARY UPSTREAM OF THE PRESSURE RELIEF VALVE, WHERE NORMAL SUPPLY PRESSURE EXCEEDS 80 PSI. CONTRACTOR SHALL COORDINATE WITH COUNTY CROSS CONNECTION CONTROL STAFF AS REQUIRED.
   C. IF IN-GROUND IRRIGATION SYSTEM IS CONNECTED TO THE POTABLE WATER LINE, AN ADDITIONAL REDUCED PRESSURE (RP) BPA SHALL BE INSTALLED AT THE POINT OF CONNECTION.
   D. ALL BPA SHALL BE INSTALLED 4-5 FEET FROM THE EDGE OF DRIVEWAYS OR ANY OTHER ITEMS/FEATURES THE BPA MAY CREATE AN OBSTRUCTION.
   E. VACUUM BREAKERS SHALL BE INSTALLED ON ALL EXTERNAL HOSE BIBBS.
   F. CONTRACTOR SHALL COORDINATE WITH COUNTY CROSS CONNECTION STAFF & PRIVATE PROPERTY OWNER AS REQUIRED. CROSS CONNECTION STAFF SHALL DETERMINE WHICH PROPERTIES REQUIRE A BPA AND TYPE OF BPA TO BE INSTALLED.

RESTORATION

34. ALL RESTORATION WORK PERFORMED THROUGHOUT THE PROJECT SHALL CONFORM TO EXISTING LINES AND GRADES UNLESS SHOWN OTHERWISE.

35. ALL DISTURBED GRASSED AREAS SHALL BE SODDED OR SEEDED UNLESS OTHERWISE INDICATED. THE TYPE OF SOD USED TO REPLACE OWNER MAINTAINED AREAS IN RIGHT-OF-WAY SHALL BE COORDINATED WITH THE PROPERTY OWNER.

36. ALL CONCRETE THRUST BLOCKS INSTALLED FOR TESTING PURPOSES AND NOT REQUIRED FOR THE OPERATION OF THE PIPELINE SHALL BE REMOVED AND DISPOSED OF BY THE CONTRACTOR, PRIOR TO FINAL ACCEPTANCE, AT NO ADDITIONAL COST TO THE OWNER.

37. ASPHALT DRIVES THAT ARE CUT SHALL BE RESTORED PER SECTION 02513 OF THE INFRASTRUCTURE ENGINEERING STANDARD SPECIFICATION.

38. CONCRETE DRIVEWAYS OR SIDEWALKS THAT ARE CUT SHALL BE RESTORED TO MATCH EXISTING ACCORDING TO THE CURRENT EDITIONS OF THE MANATEE COUNTY PUBLIC WORKS STANDARDS PART 3. HIGHWAY & TRAFFIC STANDARDS MANUAL DATED JUNE 2015, SECTION 3.7 DRIVEWAYS AND SECTION 3.8 SIDEWALKS AND/OR THE F.D.O.T. SPECIFICATIONS FOR ROAD AND BRIDGE DESIGN AND THE F.D.O.T. DESIGN STANDARDS. CONCRETE WITH A 3,000 PSI @ 28 DAYS SHALL BE USED.

39. WHENEVER A PERMANENT ROADWAY SURFACE IS NOT PLACED IMMEDIATELY AFTER BACKFILLING AND COMPACTION OF THE NEWLY INSTALLED PIPE LINE IN AREAS WHERE TRAFFIC MUST PASS, THE CONTRACTOR SHALL INSTALL A TEMPORARY SURFACE CONSISTING OF NINE INCHES OF COMPACTED LIME ROCK BASE AND A COAT OF ASPHALT EMULSION. PERMANENT ROADWAY REPAIR SHALL BE PERFORMED A MAXIMUM OF TWENTY-ONE CALENDAR DAYS AFTER THE INITIAL OPEN CUTTING. LIME ROCK BASE SHALL COME FROM AN APPROVED FDOT PIT.

40. ALL EXISTING SIGNING, THERMOPLASTIC PAVEMENT MARKINGS, ETC... SHALL BE RESTORED/PROVIDED IN ACCORDANCE WITH THE LATEST EDITIONS OF THE MUTCD, FDOT DESIGN STANDARDS AND THE MANATEE COUNTY PUBLIC WORKS DEPARTMENT HIGHWAY, TRAFFIC AND STORMWATER STANDARDS, AND/OR AS DIRECTED BY THE COUNTY.

41. RESTORATION OF CURBS, DRIVEWAYS, SIDEWALKS, AND PLACEMENT OF SOD SHALL BE COMPLETED WITHIN FORTY-FIVE CALENDAR DAYS OF INITIAL DISTURBANCE, OR TWENTY-ONE CALENDAR DAYS OF SUBSTANTIAL COMPLETION, WHICHEVER OCCURS FIRST. RESTORATION EFFORTS SHALL BE INCLUDED IN THE PROJECT SCHEDULING AND PHASING PLAN TO DEMONSTRATE HOW THE RESTORATION WILL BE ACHIEVED.

CONSTRUCTION

42. THE EXHAUST SYSTEM OF ALL GASOLINE AND DIESEL ENGINES SHALL BE EQUIPPED WITH MUFFLERS THAT MEET THE EQUIPMENT MANUFACTURER'S REQUIREMENTS FOR NOISE SUPPRESSION. THE CONTRACTOR SHALL INSTALL NOISE ABATEMENT BAFFLES POSITIONED TO BREAK LINE-OF-SITE FROM THE NOISE SOURCE TO AFFECTED RESIDENCES, AS APPROVED BY THE ENGINEER.

43. NO MATERIAL SHALL BE STOCKPILED IN ROADWAYS. ALL DIRT AND DEBRIS SHALL BE REMOVED FROM THE JOB SITE DAILY. ROADS SHALL BE SWEPT DAILY AS PART OF DAILY CLEAN UP.

44. THE CONTRACTOR IS TO CONTROL ALL FUGITIVE DUST ORIGINATING ON THIS PROJECT BY WATERING OR OTHER METHODS AS REQUIRED.

45. INGRESS AND EGRESS TO ALL THE PROPERTIES IN THE CONSTRUCTION AREA SHALL BE MAINTAINED AT ALL TIMES.

46. PRIOR APPROVAL WILL BE REQUIRED FOR REMOVAL OF ANY TREE WITHIN THE CONSTRUCTION AREA.

47. THE CONTRACTOR SHALL PROVIDE ALL DEWATERING EQUIPMENT NECESSARY TO KEEP ALL EXCAVATIONS DRY. DEWATERING IS REQUIRED TO 18" BELOW TRENCH BOTTOM.

48. ALL PIPING AND FITTINGS USED ON THIS PROJECT SHALL BE AS NOTED ON THE PLANS AND IN THE CONTRACT DOCUMENT AND SHALL BE INSTALLED TO THE LINES AND GRADES SHOWN ON THE PLANS AND PROFILES. MODIFICATIONS MUST BE APPROVED BY THE ENGINEER OF RECORD.

49. ALL PIPE SHALL BE COLOR CODED TO CONFORM TO MANATEE COUNTY STANDARDS.

50. ALL PIPE AND FITTINGS SHALL BE INSTALLED AS RECOMMENDED BY THE MANUFACTURER AND ALL PIPE JOINTS SHALL BE RESTRAINED WHERE REQUIRED.

51. ALL FITTINGS FOR PRESSURE CLASS-RATED PIPE SHALL BE RESTRAINED DUCTILE IRON. RESTRAINED LENGTHS OF PIPE SHALL ADHERE TO THE REQUIREMENTS AS SHOWN ON THE DETAIL SHEETS.

52. WHERE IT IS NECESSARY TO DEFLECT PIPE EITHER HORIZONTALLY OR VERTICALLY, PIPE DEFLECTION SHALL NOT EXCEED 75% OF THE MANUFACTURER'S MAXIMUM ALLOWABLE RECOMMENDED DEFLECTION.

53. ALL PIPE LENGTHS ARE PLUS OR MINUS AND MAY BE ADJUSTED IN THE FIELD AS REQUIRED. PIPE MEASUREMENTS ARE TO CENTER OF STRUCTURES OR FITTINGS.

54. ALL ROCKS OR STONES LARGER THAN SIX INCH DIAMETER SHALL BE REMOVED FROM THE BACKFILL MATERIAL. BACKFILL MATERIAL PLACED WITHIN ONE FOOT OF PIPING AND APPURTENANCES SHALL NOT CONTAIN ANY STONES LARGER THAN TWO INCH DIAMETER.

55. ONLY MANATEE COUNTY UTILITY OPERATIONS STAFF ARE AUTHORIZED TO OPERATE VALVES ON COUNTY OWNED AND MAINTAINED UTILITY SYSTEMS.

56. ALL PENETRATIONS OF EXISTING STRUCTURES SHALL BE BY MECHANICAL ROTARY CORE DRILLING METHOD. ALL CONCRETE PENETRATED OR DISTURBED SHALL BE COATED WITH TWO COATS OF EPOXY.

57. THE CONTRACTOR, PRIOR TO ANY TEMPORARY WATER SHUT-OFFS DURING WATER MAIN TIE-IN, ETC., SHALL NOTIFY THE AFFECTED RESIDENTS BY POSTING INFORMATIONAL SIGNS IN THE NEIGHBORHOOD AT LEAST TWO DAYS (48 HRS) PRIOR TO THE WATER SHUT-OFF. REFERENCE SECTION 01580, PARAGRAPH 1.03 OF THE SPECIFICATIONS. WHEN FEASIBLE, "DOOR HANGERS" SHALL BE DELIVERED TO AFFECTED RESIDENCES AT LEAST TWO DAYS (48 HRS) PRIOR TO WATER SHUT-OFF. FOR LARGE PROJECTS WITH HUNDREDS OF HOMES AFFECTED, THE CONTRACTOR SHALL ALSO MAKE EXTENSIVE USE OF THE MEDIA AND SHALL HAVE PRIOR CONTACT WITH HOMEOWNER'S ASSOCIATIONS. WRITTEN NOTIFICATIONS SHALL ALSO BE FAXED TO THE TAMPA TRIBUNE, BRADENTON HERALD, SARASOTA HERALD TRIBUNE, WBRD RADIO, EMERGENCY COMMUNITY CENTERS, INSPECTIONS, WATER TREATMENT PLANT, WATER MANAGER, HELPLINE, CUSTOMER SERVICE, AND THE MANATEE COUNTY UTILITY OPERATIONS DEPARTMENT.

58. ALL NEW PIPE LINES SHALL BE PIG CLEANED (4" AND LARGER), FLUSHED, PRESSURE TESTED, DISINFECTED AND CERTIFIED PRIOR TO TIE-INS TO EXISTING FACILITIES. THE CONTRACTOR WILL BE ALLOWED TO USE TEMPORARY PLUGS FOR PIG CLEANING AND PRESSURE TESTING.

59. ALL TEST POINT PIPING SHALL BE CUT LOOSE FROM THE CORPORATION STOP AND COMPLETELY REMOVED AND DISPOSED OF BY THE CONTRACTOR PRIOR TO FINAL ACCEPTANCE. A CORPORATION STOP PLUG SHALL BE INSTALLED AND THE CORPORATION STOP SHALL REMAIN IN PLACE.

60. WATER MAINS CROSSING OVER OR UNDER SANITARY SEWERS, FORCE MAINS, AND RECLAIMED WATER LINES SHALL BE LAID PER CURRENT EDITION OF "10 STATE STANDARDS" AND MANATEE COUNTY UTILITY STANDARDS UNLESS NOTED OTHERWISE ON THE PLANS.

61. FIELD CONDITIONS MAY NECESSITATE MINOR ALIGNMENT AND GRADE DEVIATION OF THE PROPOSED UTILITIES TO AVOID OBSTACLES, AS ORDERED BY THE ENGINEER.

62. CONTRACTOR SHALL PROVIDE RECORD DRAWINGS IN ACCORDANCE WITH SECTION 1.15 IN THE CURRENT MANATEE COUNTY UTILITY STANDARDS AT NO COST TO THE OWNER. RECORD DRAWINGS SHALL BE SIGNED & SEALED BY A SURVEYOR CURRENTLY LICENSED BY THE STATE OF FLORIDA. ALL RECORD DRAWING INFORMATION REQUIREMENTS IN SECTION 1.15 SHALL BE STRICTLY ENFORCED. A COPY OF SECTION 1.15 CAN BE PROVIDED UPON REQUEST.

63. THE CONTRACTOR SHALL MAINTAIN AS-BUILT DRAWINGS OF THE WORK AS CONSTRUCTED. AS-BUILT DRAWINGS SHALL INCLUDE THE LOCATION OF ABANDONED MAINS CUT AND PLUG POINTS. AS-BUILT DRAWINGS SHALL BE ANNOTATED EACH DAY AS THE WORK PROCEEDS AND SHALL BE AVAILABLE TO THE COUNTY PROJECT MANAGER AND/OR FIELD INSPECTOR FOR REVIEW ON AN ONGOING BASIS. AS-BUILT DRAWINGS SHALL PROVIDE THE HORIZONTAL AND VERTICAL INSTALLED LOCATION OF ALL NEW PIPELINE, FITTINGS, VALVES AND APPURTENANCES REFERENCED TO FIXED SURFACE FEATURES THAT ARE SHOWN ON THE CONSTRUCTION DRAWINGS AND/OR RIGHT-OF-WAY LINES, PROPERTY CORNERS OR OTHER SURVEYED POINTS. THE CONTRACTOR SHALL BE ABLE TO PRESENT THE RECORD DRAWINGS TO THE COUNTY PROJECT MANAGER AND/OR INSPECTOR ON DEMAND AS THE WORK PROGRESSES.

EXISTING UTILITY LOCATIONS

64. THE FOLLOWING IDENTIFIES THE QUALITY LEVEL OF EXISTING UTILITY LINEWORK ON PLANS.
LEVEL "A" -VISUALLY LOCATED OR SOFT DIGS (HORIZONTAL AND VERTICAL)
LEVEL "B" -DESIGNATED BY GPR OR FLAGGING (HORIZONTAL)
LEVEL "C" -SURFACE VISIBLE FEATURES SURVEY
LEVEL "D" -EXISTING RECORDS OR GIS
REFERENCE 2010 EDITION OF FDOT UTILITY ACCOMMODATION MANUAL (UAM)

MAINTENANCE OF TRAFFIC

65. THE CONTRACTOR IS RESPONSIBLE FOR ANY TRAFFIC CONTROL PLAN (TCP) IMPLEMENTED. THE TCP SHALL BE PREPARED BY AN INDIVIDUAL CERTIFIED TO PREPARE A TCP IN THE STATE OF FLORIDA THAT MEETS OR EXCEEDS THE REQUIREMENTS OF THE FDOT ROADWAY AND TRAFFIC DESIGN STANDARDS LATEST EDITION (SERIES 600). ANY DEVIATIONS MUST BE SIGNED AND SEALED BY A PROFESSIONAL ENGINEER REGISTERED IN THE STATE OF FLORIDA AND SUBMITTED TO COUNTY (AND FDOT) FOR APPROVAL AT LEAST FOURTEEN (14) DAYS PRIOR TO THE START OF CONSTRUCTION. IT IS THE CONTRACTOR'S RESPONSIBILITY TO OBTAIN COUNTY (AND FDOT) APPROVAL PRIOR TO IMPLEMENTATION AND FAILURE TO OBTAIN APPROVAL SHALL NOT BE GROUNDS FOR ANY DELAY CLAIM FOR TIME OR ADDITIONAL COMPENSATION.

66. THE CONTRACTOR PRIOR TO CONSTRUCTION AND RESTRICTING ANY TRAFFIC, MUST OBTAIN A RIGHT-OF-WAY USE PERMIT AND A TRAFFIC CONTROL PLAN (TCP). THE CONTRACTOR SHALL OBTAIN ALL REQUIRED PERMITS FROM OTHER GOVERNMENTAL AGENCIES HAVING RELEVANT JURISDICTION. ALL MAINTENANCE AND PROTECTION OF TRAFFIC SHALL BE IN ACCORDANCE WITH THE APPLICABLE REQUIREMENTS OF THE CURRENT FLORIDA DEPARTMENT OF TRANSPORTATION "MANUAL OF TRAFFIC CONTROL AND SAFE PRACTICES". A TCP SHALL BE SUPPLIED BY THE CONTRACTOR AT THE PRE-CONSTRUCTION MEETING.

67. THE CONTRACTOR SHALL USE, BUT ARE NOT LIMITED TO, FDOT INDICES 415, 600, 615, 616, AND 621. THE RECOMMENDED FDOT DESIGN STANDARD INDICES ARE CONCEPTUAL.

68. THE CONTRACTOR SHALL BE REQUIRED TO PROVIDE TEMPORARY DRAINAGE. THERE WILL BE NO DIRECT PAY FOR THIS WORK. COSTS SHALL BE INCLUDED IN THE COST OF PIPE.

69. MOTORIZED AND MECHANICAL EQUIPMENT SHALL BE EFFECTIVELY SHIELDED, PADDED, OR LOCATED TO MINIMIZE NOISE.

70. THE CONTRACTOR WILL NOTIFY ALL EMERGENCY AND RESCUE AGENCIES LOCATED IN THE PROJECT VICINITY 24 HOURS IN ADVANCE OF ANY PROPOSED LANE CLOSURES OR DETOURS.

71. ACCESS TO ALL SIDE STREETS AND DRIVEWAYS MUST BE PROVIDED AND MAINTAINED DURING CONSTRUCTION.

72. USE FDOT INDEX NO. 619 FOR TRAFFIC CONTROL MEASURES WHEN CONSTRUCTION EQUIPMENT IS DRIVEN ON OPEN TRAVEL LANES. THE REGULATORY SPEED IN WORK ZONES SHOULD BE AS CLOSE TO NORMAL CONDITIONS AS POSSIBLE, UNLESS NOTED ON THE TRAFFIC CONTROL PLANS.

73. THE CONTRACTOR SHALL NOTIFY ALL UTILITY COMPANIES PRIOR TO WORKING NEAR THEIR EXISTING FACILITIES.

74. CONSTRUCTION SEQUENCES SHALL BE COORDINATED TO PROVIDE POSITIVE DRAINAGE OF THE TRAVELWAYS AT ALL TIMES.

75. ANY MOT ITEM NOT SPECIFICALLY LISTED UNDER A PARTICULAR PAY ITEM SHALL BE CONSIDERED SUBSIDIARY TO OTHER BID ITEMS. THERE SHALL BE NO SEPARATE PAYMENT.

76. THE MAXIMUM SPACING BETWEEN WARNING DEVICES USED FOR DELINEATION BETWEEN THE TRAVELWAY(S) AND CONSTRUCTION AREA SHALL BE AS PER FDOT STANDARD INDEX 600.

77. ALL DETOURS, IF APPROVED BY THE COUNTY, SHALL ADHERE TO THE REQUIREMENTS SET FORTH IN THE MANUAL OF UNIFORM TRAFFIC CONTROL DEVICES (M.U.T.C.D. LATEST EDITION) AND THE FDOT ROADWAY AND TRAFFIC DESIGN STANDARDS, LATEST EDITION (600 SERIES). ANY DETOUR RECOMMENDED BY THE CONTRACTOR MUST BE SUBMITTED TO THE COUNTY (AND FDOT) FOR APPROVAL AT LEAST FOURTEEN (14) DAYS PRIOR TO THE START OF CONSTRUCTION. IT IS THE CONTRACTOR'S RESPONSIBILITY TO OBTAIN COUNTY (AND FDOT) APPROVAL PRIOR TO IMPLEMENTATION AND FAILURE TO OBTAIN APPROVAL SHALL NOT BE GROUNDS FOR ANY DELAY CLAIM FOR TIME OR ADDITIONAL COMPENSATION.

LEGEND

EXISTING

Abbrev. / symbol	Description
(bench mark symbol)	BENCH MARK
CM	CONCRETE MONUMENT
(open circle)	IRON PIPE
(solid circle)	IRON ROD
(triangle)	HUB
(circled dot)	NAIL & DISK
+5.23	ELEVATION
(1234)	PARCEL ID NO.
(1234 5678)	PARCEL ID NO.
(777)	LOT NO.
(guy symbol)	GUY WIRE
PP	POWER POLE
(light symbol)	LIGHT POLE
(mailbox symbol)	MAIL BOX
(sign symbol)	SIGN
REF	REFLECTOR
(sprinkler symbol)	SPRINKLER
(G)	GAS MARKER
(backflow symbol)	BACKFLOW PREVENTER
(blow off symbol)	BLOW OFF VALVE
FH	FIRE HYDRANT
WV	WATER VALVE
ARV (A)	AIR RELEASE VALVE
WM	WATER METER
(S)	SANITARY SEWER MANHOLE
(small circle)	SANITARY SEWER CLEAN OUT
SB#1	SOIL BORING LOCATION
TEL (TEL)	TELEPHONE SERVICE BOX
UBX	UTILITY BOX
UR	UTILITY RISER
(arrowhead)	FLOW DIRECTION
GI	GRATE INLET
(mitered end symbol)	MITERED END SECTION
(large circle)	STORM SEWER MANHOLE
(bush symbol)	BUSH
(tree symbol)	TREE
(oak tree symbol)	OAK TREE
(palm tree symbol)	PALM TREE
(pine tree symbol)	PINE TREE
(scalloped line)	EDGE OF VEGETATION
(line)	CHAIN LINK FENCE
(line)	WOOD FENCE
(line)	BARBED WIRE FENCE
FM	FORCE MAIN
PW	POTABLE WATER
RCW	RECLAIMED WATER
SS	SANITARY SEWER
S	STORM DRAIN
GAS	GAS LINE
OCHR	OVERHEAD CHARTER
CHR	UNDERGROUND CHARTER
OE	OVERHEAD ELECTRIC
BE	UNDERGROUND ELECTRIC
OH FTR	OVERHEAD FRONTIER
FTR	UNDERGROUND FRONTIER
PCO	UNDERGROUND PRECO
FPL	UNDERGROUND FPL
OH	OVERHEAD UTILITY
(hatched line)	RAIL ROAD TRACKS
(line)	EDGE OF CONCRETE
(dotted line)	EDGE OF ROAD
(dashed line)	TOE OF SLOPE
(line)	TOP OF BANK
(line)	PROPERTY LINE
(line)	RIGHT OF WAY

ABBREVIATIONS

Abbrev.	Meaning
R/W	RIGHT OF WAY
CONC	CONCRETE
ASPH	ASPHALT
DRWY	DRIVEWAY
SWK	SIDEWALK
EP	EDGE OF PAVEMENT
BOC	BACK OF CURB
(zigzag arrow)	FLOW ARROW

EMERGENCY CONTACTS

MANATEE COUNTY PUBLIC WORKS DEPT.
1022 26TH AVENUE EAST
BRADENTON, FL. 34208
SHEA SHOUN, P.E.
(941) 708-7450 EXT. 7661
FAX: (941) 708-7415

TECO/PEOPLES GAS CO.
8261 VICO COURT
SARASOTA, FL. 34240
(941) 342-4030
DAN SHANAHAN
FAX: (941) 342-4011
EMERGENCY: 1-877-832-6911

ATMS
2101 47TH TERRACE EAST
BRADENTON, FL 34203
VISHAL KAKKAD, P.E.
(941) 749-3500 EXT. 7812
FAX: (941) 749-3571
vishal.kakkad@mymanatee.org.

FRONTIER
1701 RINGLING BLVD.
SARASOTA, FL. 34236
JOHN PLOTT
(941) 906-6707
FAX: (941) 906-6706
John.Plott@ftr.com

FLORIDA POWER & LIGHT
1253 12TH AVENUE EAST
PALMETTO, FL 34221
TODD BOLKEMA
(941) 927-4262
EMERGENCY: 1-800-4-OUTAGE
TODD.BOLKEMA@FPL.COM

MANATEE COUNTY HEALTH DEPT.
410 6th AVENUE EAST
BRADENTON, FL. 34208
(941) 748-0747 EXT. 1355
FAX: (941) 750-9364

SOUTHWEST FLORIDA WATER MANAGEMENT DISTRICT SARASOTA SERVICE OFFICE
STEVE LOPES
6750 FRUITVILLE ROAD
SARASOTA, FL. 34240
(941) 377-3722
FAX: (941) 373-7660

FLORIDA GAS TRANSMISSION
7804 ANDERSON RD.
TAMPA FL 33634
CHAD HARRELL
PHONE: (813) 466-3327
E-mail: chad.harrell@sug.com

PEACE RIVER ELECTRIC COOPERATIVE, INC.
P.O. BOX 1310
WACHULA, FL 33873
KENDELL COKER
(863) 767-4660
kendell.coker@preco.coop

DEPARTMENT OF ENVIRONMENTAL PROTECTION
13051 N. TELECOM PKWY
TEMPLE TERRACE, FL 33637
ED WATSON
PHONE: (813) 470-5875
FAX: (813) 470-5993

CHARTER COMMUNICATION
5413 E. STATE ROAD 64
BRADENTON, FL. 34208-5535
TOM WRIGHT
(941) 748-3816 EXT. 21348
Tom.Wright@charter.com

SUNSHINE STATE ONE CALL OF FLORIDA
1-(800) 432-4770

NO.	REVISION DESCRIPTION	BY	DATE

Know what's below
Call before you dig

SATELLITE LIFT STATION R&R
2024 GROUP 1
GENERAL NOTES & LEGEND

Manatee County FLORIDA
PUBLIC WORKS DEPARTMENT
ENGINEERING SERVICES
1022 26th Avenue East, Bradenton, FL 34208

PROJECT #	402-0019707 / 5001301	
SURVEY #	NA	
SEC./TWN./RGE	VARIES	
SCALE	N.T.S.	
	BY	DATE
SURVEYED	NA	NA
DESIGNED	JSS	5/2023
DRAWN	JKW	5/2023
CHECKED	JSS	-

J. SHEA SHOUN, P.E.
FLORIDA P.E. # 60923
JOHN S. SHOUN LICENSE No. 60923 STATE OF FLORIDA PROFESSIONAL ENGINEER 09/21/2023
Signature & Date

H:\Util Eng Design\PROJ\~SAN SWR Proj\San Swr - LS Upgrades\SLS R&R 2024 Group 1\DWGS\SLS R&R 2024-1.dwg,NOTES, 9/21/2023 8:47 AM Kyle Wright, 1:1, ANSI full bleed D (34.00 x 22.00 Inches), MC-2016.STB

12-D, RTU 221
7830 DESOTO MEMORIAL DR., BRADENTON
LAT N: 27.518517°
LONG W: -82.640636°

SR-70, RTU 381,
5236 45TH ST E., BRADENTON
LAT N: 27.446484°
LONG W: -82.505701°

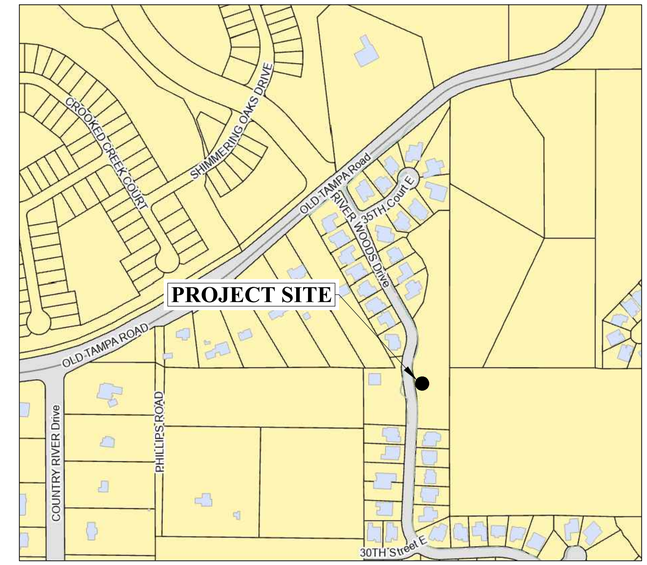

RIVERWOODS 1, RTU 564,
3202 RIVERWOODS DR., PARRISH
LAT N: 27.542560°
LONG W: -82.450347°

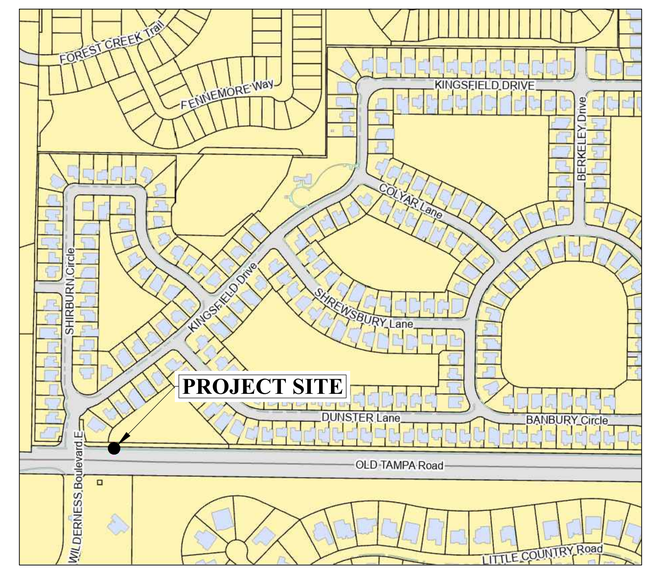

KINGSFIELD GROVES 1, RTU 572,
11710 OLD TAMPA RD., PARRISH
LAT N: 27.548659°
LONG W: -82.436499°

NOTE(S):

1. LIFT STATION SITE VISITS MAY BE COORDINATED WITH ERIK GIBSON, 941-792-8811 x5377.
2. DATA ON THE COUNTY'S UTILITY INFRASTRUCTURE MAY BE RESEARCHED AND VIEWED BY UTILIZING THE PUBLIC ACCESS TO THE COUNTY'S GIS SYSTEM. USE AN INTERNET BROWSER AND ENTER THE FOLLOWING URL, "https://www.mymanatee.org/gisapps/mobile/index.html?type=utilities-public".

NO.	REVISION DESCRIPTION	BY	DATE

811 Know what's below Call before you dig

SATELLITE LIFT STATION R&R

2024 GROUP 1

VICINTIY MAPS

Manatee County FLORIDA
PUBLIC WORKS DEPARTMENT
ENGINEERING SERVICES
1022 26th Avenue East, Bradenton, FL 34208

PROJECT #	402-0019707 / 5001301	
SURVEY #	NA	
SEC./TWN./RGE	VARIES	
SCALE	N.T.S.	
	BY	DATE
SURVEYED	NA	NA
DESIGNED	JSS	5/2023
DRAWN	JKW	5/2023
CHECKED	JSS	-

J. SHEA SHOUN, P.E.
FLORIDA LICENSE No. 60923
JOHN SHEA SHOUN
STATE OF FLORIDA PROFESSIONAL ENGINEER
04/21/2023
Signature Date

SHEET 03 OF 11

H:\Civil Eng Design\Projects\S-T Upgrades\S-T R&R 2024 Group 1\DWGS\S-T R&R 2024-1 Dwg\MC-MOD-9/21/2023 8:47 AM Kyle Wright, 1:1, ANSI full bleed D (34.00 x 22.00 Inches), MC-2016.STB

EXISTING

NOTES:

1. THE WET WELL AND VALVE VAULT CONFIGURATION SHOWN ON THESE GRAPHICS IS FOR IDENTIFICATION OF COMPONENTS TO BE REMOVED. THE CONTRACTOR SHALL FIELD VERIFY ALL EXISTING CONDITIONS, ELEVATIONS, CONFIGURATION, ETC. FOR ACCURACY.
2. CONTRACTOR SHALL FIELD VERIFY ALL EXISTING CONDITIONS AND DIMENSIONS.
3. THE CONTRACTOR SHALL DETERMINE THE DISCHARGE PIPING ELEVATIONS DURING THE SITE VISITS.
4. REMOVAL AND REINSTALLATION OF THE PUMPS DURING THE REHABILITATION SHALL BE DONE BY MANATEE COUNTY PERSONNEL IN COORDINATION WITH THE CONTRACTOR
5. BY–PASS PUMPING IS THE RESPONSIBILITY OF THE CONTRACTOR.
6. MANATEE COUNTY GOVERNMENT WILL PROVIDE ONE (1) LIFT STATION SHUT–DOWN AT NO COST TO THE CONTRACTOR. ADDITIONAL SHUT–DOWNS WILL COST THE CONTRACTOR $3,500 EACH, IF NEEDED.
7. THE CONTRACTOR IS RESPONSIBLE FOR RESTORING ANY DAMAGED LANDSCAPING TO EXISTING OR DESIGN CONDITIONS.
8. THE WORK AREA IS LIMITED TO THE LIFT STATION SITE.

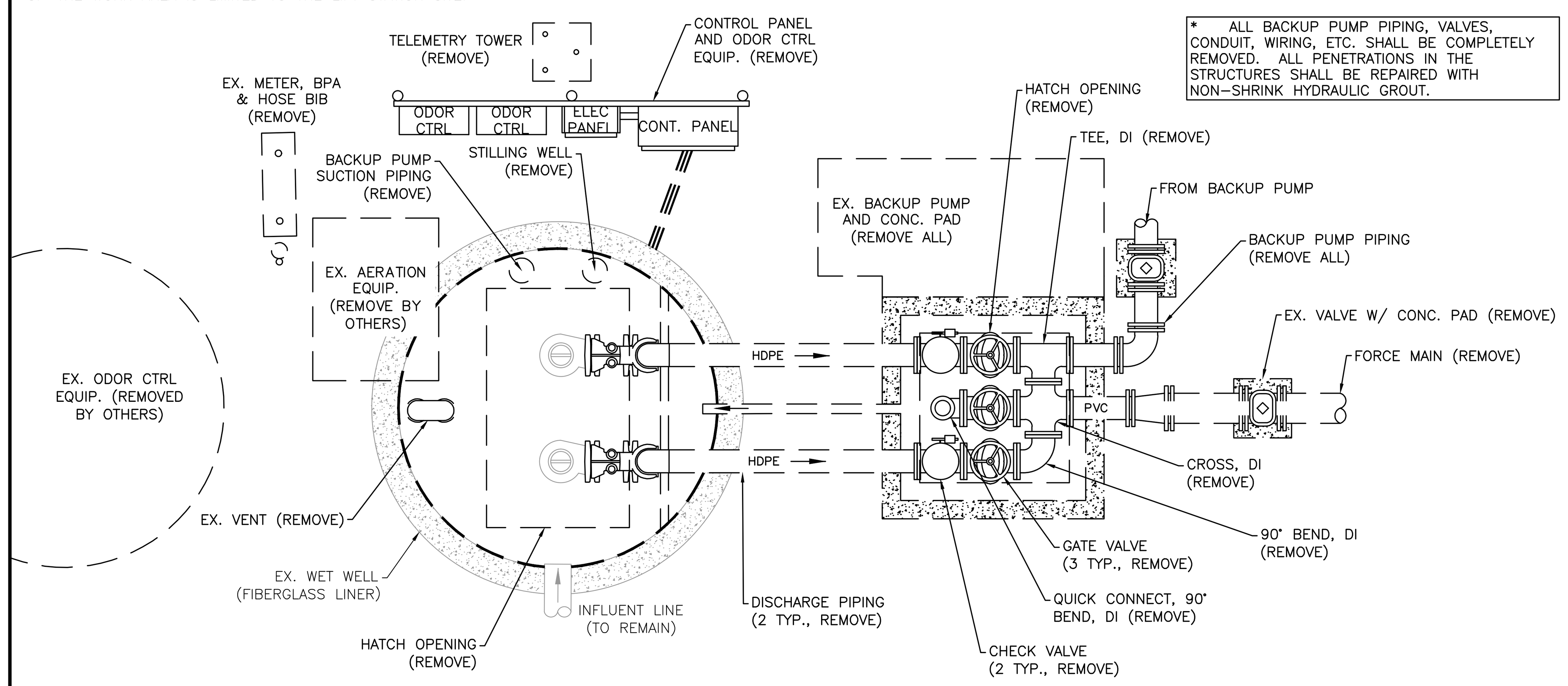

PLAN

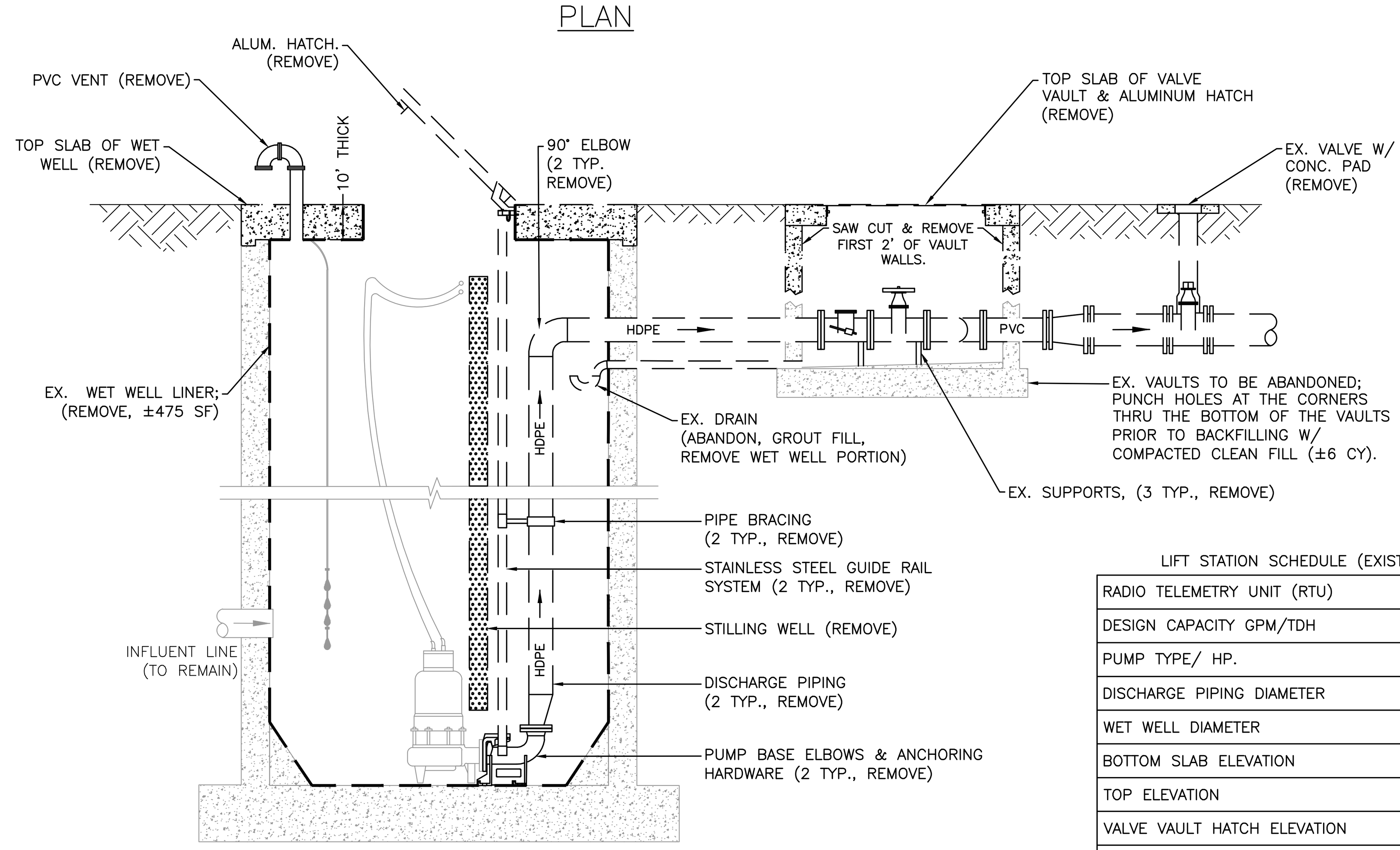

ELEVATION
EX. 2 PUMP LIFT STATION
NTS

LIFT STATION SCHEDULE (EXISTING)

RADIO TELEMETRY UNIT (RTU)	221
DESIGN CAPACITY GPM/TDH	500/40
PUMP TYPE/ HP.	HYDROMATIC/15
DISCHARGE PIPING DIAMETER	6"
WET WELL DIAMETER	8'
BOTTOM SLAB ELEVATION	–8.60
TOP ELEVATION	8.00
VALVE VAULT HATCH ELEVATION	8.00
INFLUENT INVERT ELEVATION	–2.69
INFLUENT PIPE SIZE	10" CIP
FORCE MAIN DIAMETER	8"
WET WELL VENT PIPE	6" PVC
ELECT. POWER, VOLTS/PH	240/3
ELECT. SERVICE SIZE, AMPS	150
EX. FORCEMAIN TIE–IN	MH

* INFORMATION TAKEN FROM LIFT STATION DATA FILE (LSINFO.XLS 2020) & RECORD DRAWINGS. DATUM OF ELEVATIONS IS UNKNOWN.

PROPOSED

GENERAL NOTES:

1. ALL MATERIALS AND INSTALLATION SHALL BE IN ACCORDANCE WITH THE LATEST MANATEE COUNTY PUBLIC WORKS UTILITY STANDARDS. ALL HORIZONTAL AND VERTICAL DISTANCES AND MEASUREMENTS SHALL BE FIELD VERIFIED PRIOR TO ORDERING MATERIALS AND COMMENCING WORK. ALL MEASUREMENTS AND CALCULATIONS SHALL BE THE RESPONSIBILITY OF THE AWARDED CONTRACTOR.
2. THE CONCRETE SHALL BE GIVEN A BROOM FINISH. THE SURFACE VARIATIONS SHALL BE NOT MORE THAT 1/4" UNDER A TEN FOOT (10') STRAIGHTEDGE, NOT MORE THAN 1/8" ON A FIVE FOOT (5') TRANSVERSE SECTION. THE EDGE OF THE CONCRETE PAD SHALL BE CAREFULLY FINISHED WITH AN EDGING TOOL HAVING A RADIUS OF 1/2".
3. EXPANSION JOINT: EXPANSION JOINTS BETWEEN THE CONC. PAD AND THE WET WELL SHALL BE 1/2" MATERIAL AND SHALL MEET THE REQUIREMENTS OF AASHTO M153 OR AASHTO M213.
4. THE EXTERIOR SURFACES OF THE CONCRETE WET WELL AND VALVE PAD EXPOSED ABOVE GRADE SHALL BE COATED WITH AT LEAST TWO COATS OF H & C SILICONE ACRYLIC CONCRETE STAIN, PATIO GREEN, MANUFACTURED BY FLR PAINTS. THE ABOVE GROUND VALVE ASSEMBLY & PIPING SHALL BE PAINTED, RUSTOLEUM 7538 HUNTER GREEN. CONTRACTOR SHALL TAKE PRECAUTIONS TO PREVENT OVER–SPRAY OF PAINT ONTO THE CONCRETE SLAB.
5. ALL PAINTING SHALL BE INCLUDED IN THE BID ITEM TO BE PAINTED.

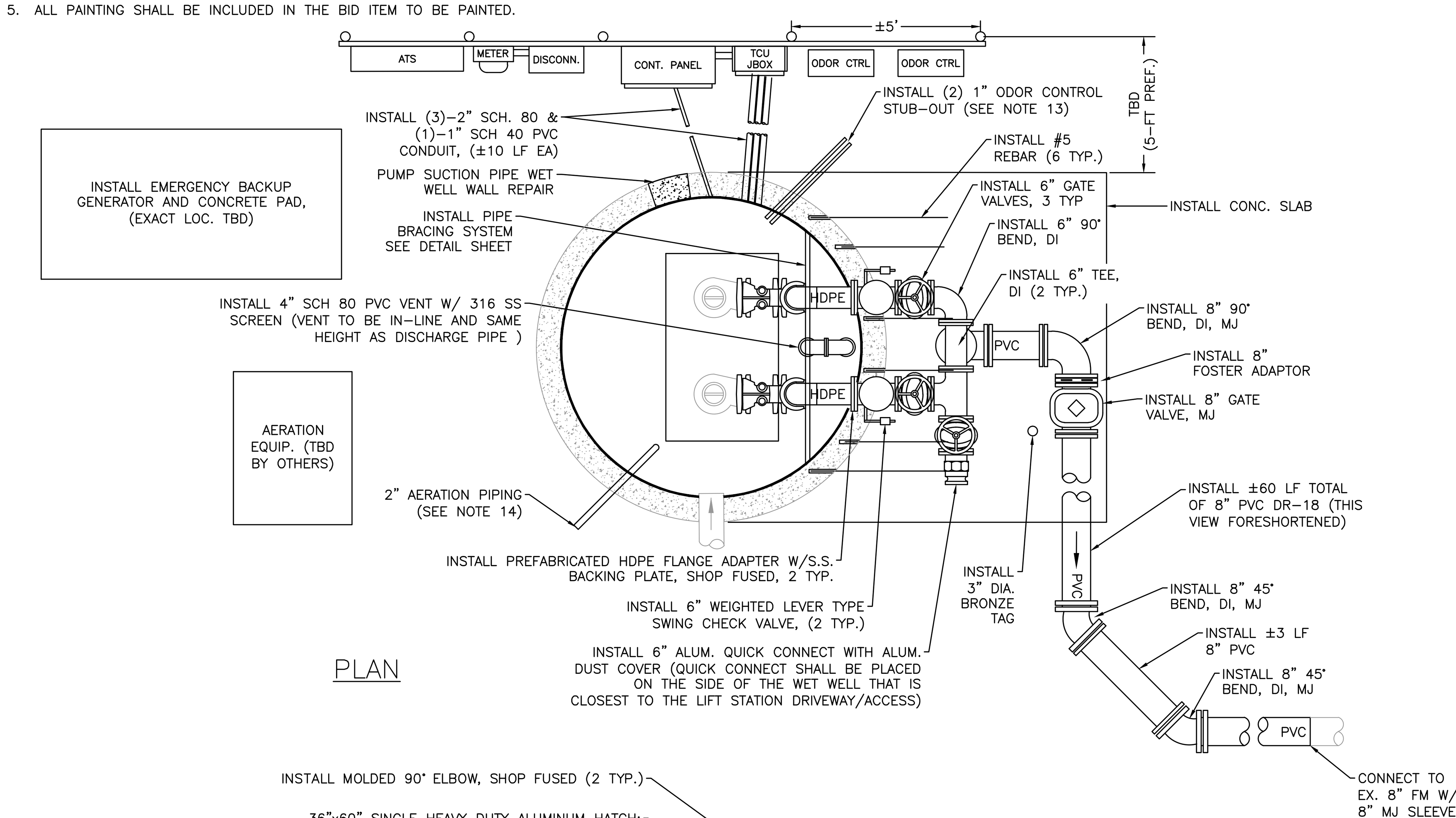

PLAN

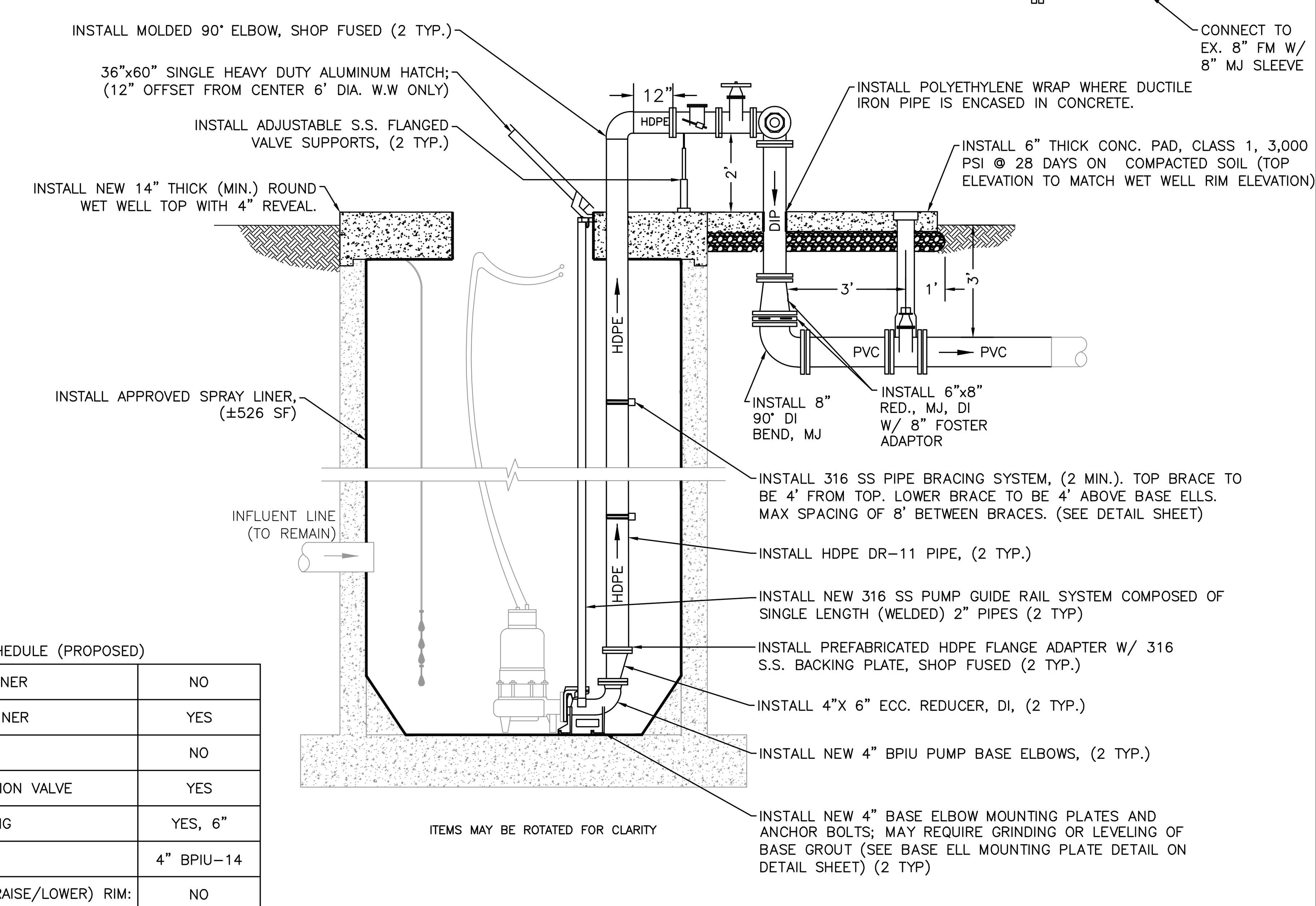

ELEVATION
EX. 2 PUMP LIFT STATION
NTS

LIFT STATION SCHEDULE (PROPOSED)

INSTALL FIBERGLASS W.W. LINER	NO
APPLY SPRAY LINER W.W. LINER	YES
INSTALL STILLING WELL	NO
INSTALL FORCE MAIN ISOLATION VALVE	YES
NEW HDPE DISCHARGE PIPING	YES, 6"
NEW BASE ELL	4" BPIU–14
MODIFY WET WELL WALLS (RAISE/LOWER) RIM:	NO
MODIFY TOP OF VALVE VAULT	NO
INSTALL WET WELL VENT PIPE	YES, 6"
INSTALL NEW WATER SERVICE ASSEMBLY	YES
RELOCATE EX. WATER SERVICE ASSEMBLY	NO

CONSTRUCTION NOTES:

1. CONTRACTOR TO CALL 811 PRIOR TO COMMENCING WORK. PROTECT AND SUPPORT ALL EXISTING UNDERGROUND UTILITIES (MANATEE COUNTY / OTHERS) IN THE ROW OR ADJACENT AREAS.
2. INSTALL NEW 200 AMP ELECTRICAL SERVICE ENTRANCE FEEDER TO ACCOMMODATE NEW MAIN DISCONNECT SIZE REQUIREMENTS ±150 LF NEW ELECTRICAL SERVICE WITH CONDUIT FROM OTHER SIDE OF THE ROADWAY VIA DIRECTIONAL DRILLING.
3. REMOVE AND INSTALL ALL NEW ONE–SIDED ELECTRICAL STRUCTURE (RACK), A CONTROL PANEL, TCU ENCLOSURE, JUNCTION BOX ENCLOSURE, A METER CAN, AND A SAFETY SWITCH (DISCONNECT). ALL REMAINING EXISTING ELECTRICAL EQUIPMENT CONNECTED TO THE EXISTING CONTROL PANEL SHALL BE RE–ESTABLISHED TO THE NEW PANEL. THE NEW ELECTRICAL STRUCTURE SHALL BE FIELD LOCATED WITH MANATEE COUNTY PERSONNEL. GENERATOR RECEPTACLE SHALL BE INSTALLED IN A REMOTE LOCATION. CONTRACTOR RESPONSIBLE FOR VERIFYING SIZE OF RACK TO HOLD ALL PROPOSED ELECTRICAL ENCLOSURES/COMPONENTS.

   A TCU BUBBLER UNIT (RPT–001) SYSTEM PROVIDED AND INSTALLED BY DATA FLOW SYSTEMS (DFS) FOR WET WELL LEVEL CONTROL AND SHALL BE INCLUDED WITH THE CONTROL PANEL.
4. THE LIFT STATION SITE HAS AUXILIARY EQUIPMENT. INSTALL SIX (6) ADDITIONAL BREAKERS; THREE 20 AMP BREAKERS (BATTERY CHARGER, WATER JACKET HEATER, & SPACE HEATER); ONE 3–POLE 20 AMP BREAKER (THIOGUARD); ONE 3–POLE 30 AMP BREAKER (AERATION); AND ONE 1–POLE 120V 20 AMP BREAKER (BIOAMP) IN THE CONTROL PANEL.
5. AN ELECTRICAL SYSTEM STUDY, ELECTRICAL STUDY ANALYSIS, AND PROPER LABELING IN COMPLIANCE WITH NFPA 70E "STANDARD FOR ELECTRICAL SAFETY IN THE WORKPLACE" AND IEEE 1584 2018 "GUIDE FOR PERFORMING ARC FLASH HAZARDS CALCULATIONS" SHALL BE PROVIDED.
6. SEPARATE THE TELEMETRY TOWER FROM CONCRETE BASE AND SET TO SIDE OF LIFT STATION SITE. CONTRACTOR SHALL REMOVE AND DISPOSE OF CONCRETE BASE AND ALL GROUNDING ROD(S). COUNTY SHALL INSTALL NEW TELEMETRY ANTENNA.
7. INSTALL #5 REBAR (6 TYP.) EPOXY EMBEDDED INTO THE WET WELL TOP 3–4 INCHES DEEP AND CAST 3–4 FEET INTO THE VALVE ASSEMBLY CONCRETE PAD TO ENSURE THE TOPS OF THE WET WELL AND VALVE ASSEMBLY PAD WILL REMAIN FLUSH.
8. WET WELL CONCRETE WALLS SHALL BE INSPECTED BY COUNTY PERSONNEL PRIOR TO INSTALLATION OF NEW SPRAY LINER AND/OR LINER REPAIR.
9. REPAIR CONCRETE WALLS, AS NEEDED, IN WET WELL, 2–INCH MIN. THICK OVER EXISTING REBAR, (±131 SF). ALL REPAIRS TO BE VERIFIED WITH COUNTY PERSONNEL PRIOR TO WORK.
10. INSTALL A NEW 2–INCH WATER SERVICE AND 6"x2" TAPPING SADDLE; A STANDARD METER/BPA ASSEMBLY; AND A 3/4–INCH HOSE BIBB ASSEMBLY PER COUNTY STANDARDS VIA HORIZONTAL DIRECTIONAL DRILL. THE EXISTING WATER MAIN IS LOCATED IN THE ROW ON THE OTHER SIDE OF THE ROADWAY. THE METER/BPA SHALL BE LOCATED AS CLOSE AS POSSIBLE TO THE FENCE / EASEMENT / RIGHT–OF–WAY LINE IN CLOSEST PROXIMITY TO THE WATER DISTRIBUTION MAIN. ALL ITEMS SHALL BE FIELD LOCATE WITH MANATEE COUNTY PERSONNEL, (±60 LF).
11. ABANDON EXISTING WATER SERVICE SADDLE AND CORPORATION AT MAIN; INSTALL A BRASS PLUG IN CORPORATION STOP.
12. REGRADE SITE TO ALLOW FOR A POSITIVE DRAINAGE SLOPE AWAY FROM THE LIFT STATION AREA TOWARDS THE SURROUNDING DITCHES. MAXIMUM OF 1% SLOPE.
13. ALL ODOR CONTROL EQUIPMENT SHALL BE REMOVED AND REINSTALLED BY OTHERS. CONTRACTOR SHALL COORDINATE WITH OTHERS.
14. INSTALL TWO (2) CAPPED STUB–OUTS; 3 LF EACH OF (2)–1" PVC PIPES BY CORE BORING THROUGH THE WET WELL WALL, USE HYDRAULIC NON–SHRINK GROUT TO REPAIR THE HOLES FOR THE ODOR CONTROL EQUIPMENT CONNECTIONS. FIELD VERIFY LOCATE WITH COUNTY PERSONNEL.
15. AERATION UNIT TO BE REMOVED BY OTHERS. CONTRACTOR TO INSTALL A 2–INCH AERATION PIPING (ALL 316 SS) BY CORE BORING THROUGH THE WET WELL WALL, USE HYDRAULIC NON–SHRINK GROUT TO REPAIR THE HOLE FOR THIS STATION ONLY. THE AERATION PIPING SHALL RUN FROM THE AERATION UNIT TO THE INSIDE OF THE WET WELL. SEE SHEET 10 FOR A CONCEPTUAL LAYOUT AND DESIGN. ALL SHALL BE FIELD LOCATED AND COORDINATED WITH COUNTY PERSONNEL.

QUESTIONS / COMMENTS:
1. WATER DISTRIBUTION IS PUBLIC.
2. SEWER COLLECTION IS PUBLIC.

NO.	REVISION DESCRIPTION	BY	DATE

Know what's below
Call before you dig

SATELLITE LIFT STATION R&R
2024 GROUP 1
12-D, RTU 221

PUBLIC WORKS DEPARTMENT
ENGINEERING SERVICES
1022 26th Avenue East, Bradenton, FL 34208

PROJECT #	402–5163888	
SURVEY #	NA	
SEC./TWN./RGE	19/34/17	
SCALE	N.T.S.	
	BY	DATE
SURVEYED	NA	NA
DESIGNED	JSS	5/2023
DRAWN	JKW	5/2023
CHECKED	JSS	–

J. SHEA SHOUN, P.E.
FLORIDA P.E. # 60923
JOHN S. SHOUN LICENSE No. 60923 STATE OF FLORIDA PROFESSIONAL ENGINEER 09/21/2023
Signature & Date

H:\Util Eng Design\PROJ\~SAN SWR Proj\San Swr – LS Upgrades\SLS R&R 2024 Group 1\DWGS\SLS R&R 2024–1.dwg,12–D, 9/21/2023 8:47 AM Kyle Wright, 1:1, ANSI full bleed D (34.00 x 22.00 Inches), MC–2016.STB

EXISTING

NOTES:

1. THE WET WELL AND VALVE VAULT CONFIGURATION SHOWN ON THESE GRAPHICS IS FOR IDENTIFICATION OF COMPONENTS TO BE REMOVED. THE CONTRACTOR SHALL FIELD VERIFY ALL EXISTING CONDITIONS, ELEVATIONS, CONFIGURATION, ETC. FOR ACCURACY.
2. CONTRACTOR SHALL FIELD VERIFY ALL EXISTING CONDITIONS AND DIMENSIONS.
3. THE CONTRACTOR SHALL DETERMINE THE DISCHARGE PIPING ELEVATIONS DURING THE SITE VISITS.
4. REMOVAL AND REINSTALLATION OF THE PUMPS DURING THE REHABILITATION SHALL BE DONE BY MANATEE COUNTY PERSONNEL IN COORDINATION WITH THE CONTRACTOR
5. BY-PASS PUMPING IS THE RESPONSIBILITY OF THE CONTRACTOR.
6. MANATEE COUNTY GOVERNMENT WILL PROVIDE ONE (1) LIFT STATION SHUT-DOWN AT NO COST TO THE CONTRACTOR. ADDITIONAL SHUT-DOWNS WILL COST THE CONTRACTOR $3,500 EACH, IF NEEDED.
7. THE CONTRACTOR IS RESPONSIBLE FOR RESTORING ANY DAMAGED LANDSCAPING TO EXISTING OR DESIGN CONDITIONS.
8. THE WORK AREA IS LIMITED TO THE LIFT STATION SITE.

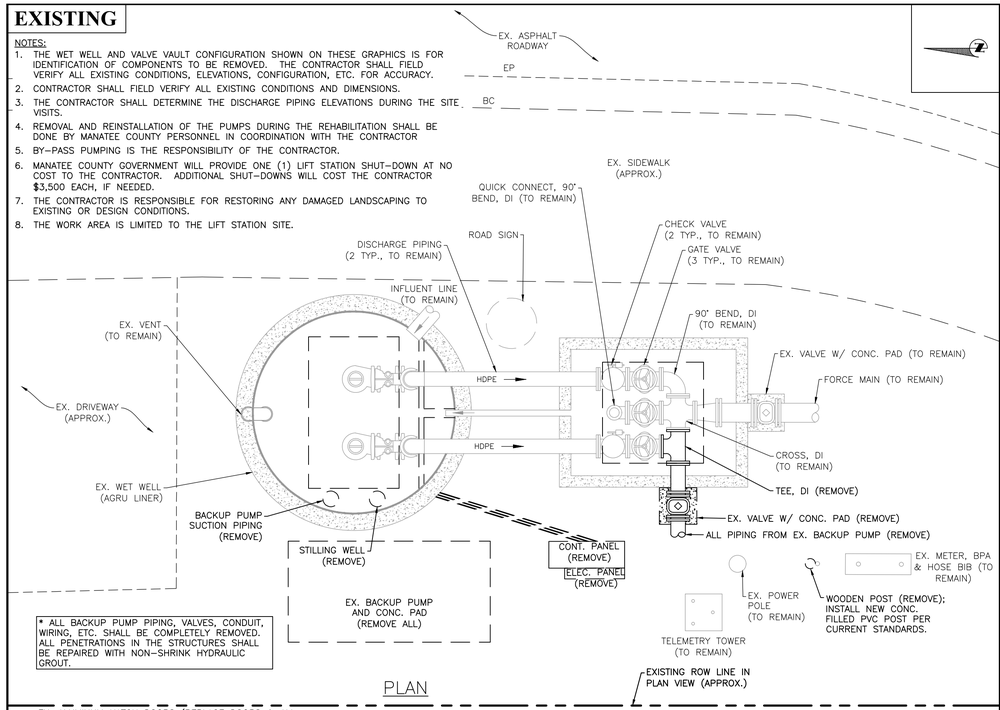

* ALL BACKUP PUMP PIPING, VALVES, CONDUIT, WIRING, ETC. SHALL BE COMPLETELY REMOVED. ALL PENETRATIONS IN THE STRUCTURES SHALL BE REPAIRED WITH NON-SHRINK HYDRAULIC GROUT.

PLAN

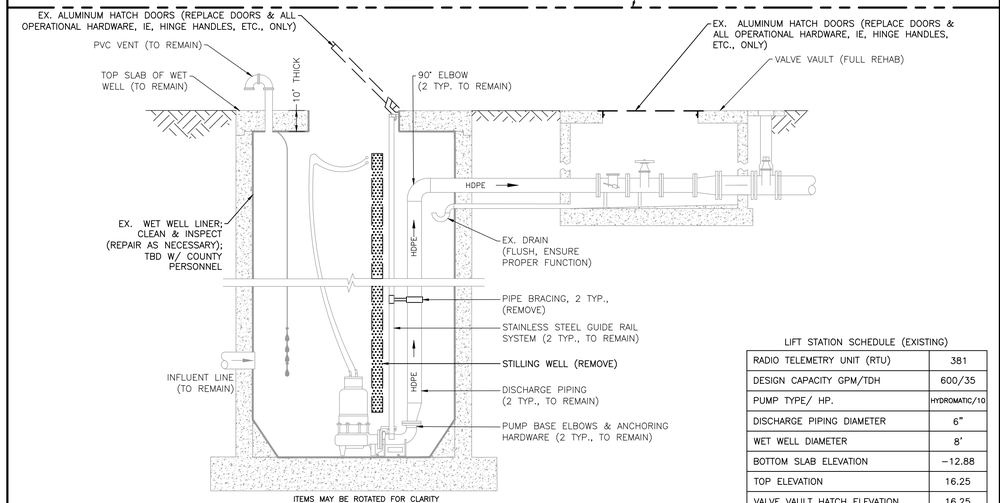

ITEMS MAY BE ROTATED FOR CLARITY

ELEVATION
EX. 2 PUMP LIFT STATION
NTS

LIFT STATION SCHEDULE (EXISTING)

RADIO TELEMETRY UNIT (RTU)	381
DESIGN CAPACITY GPM/TDH	600/35
PUMP TYPE/ HP.	HYDROMATIC/10
DISCHARGE PIPING DIAMETER	6"
WET WELL DIAMETER	8'
BOTTOM SLAB ELEVATION	-12.88
TOP ELEVATION	16.25
VALVE VAULT HATCH ELEVATION	16.25
INFLUENT INVERT ELEVATION	-4.42
INFLUENT PIPE SIZE	10"
FORCE MAIN DIAMETER	8"
WET WELL VENT PIPE	PVC
ELECT. POWER, VOLTS/PH	230/3
ELECT. SERVICE SIZE, AMPS	100
EX. FORCEMAIN TIE-IN	MH

* INFORMATION TAKEN FROM LIFT STATION DATA FILE (LSINFO.XLS 2020) & RECORD DRAWINGS. DATUM OF ELEVATIONS IS UNKNOWN.

PROPOSED

GENERAL NOTES:

1. CONTRACTOR SHALL NOT BACKFILL OVER DISCHARGE PIPING UNTIL INSPECTOR HAS VISUALLY CHECKED IT FOR LEAKS DURING PUMP STARTUP OR PRESSURE TEST AS DIRECTED BY THE COUNTY.
2. ALL MATERIALS AND INSTALLATION SHALL BE IN ACCORDANCE WITH THE LATEST MANATEE COUNTY PUBLIC WORKS UTILITY STANDARDS. ALL HORIZONTAL AND VERTICAL DISTANCES AND MEASUREMENTS SHALL BE FIELD VERIFIED PRIOR TO ORDERING MATERIALS AND COMMENCING WORK. ALL MEASUREMENTS AND CALCULATIONS SHALL BE THE RESPONSIBILITY OF THE AWARDED CONTRACTOR.
3. THE EXTERIOR SURFACES OF THE CONCRETE WET WELL AND VALVE VAULT EXPOSED ABOVE GRADE SHALL BE COATED WITH AT LEAST TWO COATS OF H & C SILICONE ACRYLIC CONCRETE STAIN, PATIO GREEN, MANUFACTURED BY FLR PAINTS, INC.
4. ALL EXISTING DUCTILE IRON PIPE AND/OR FITTINGS LABELED TO REMAIN IN THE VALVE VAULT SHALL BE COATED WITH A BITUMINOUS COATING.
5. COAT THE INTERIOR OF THE VALVE VAULT WALLS WITH TWO (2) COATS OF COAL TAR EPOXY.
6. ALL PAINTING SHALL BE INCLUDED IN THE BID ITEM TO BE PAINTED.

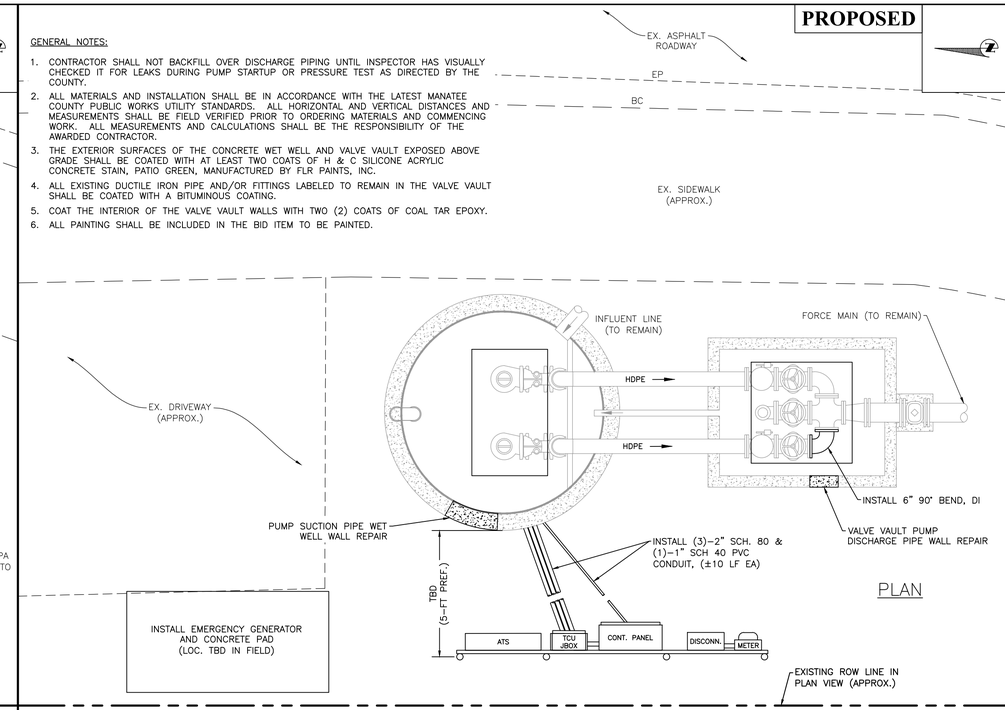

PLAN

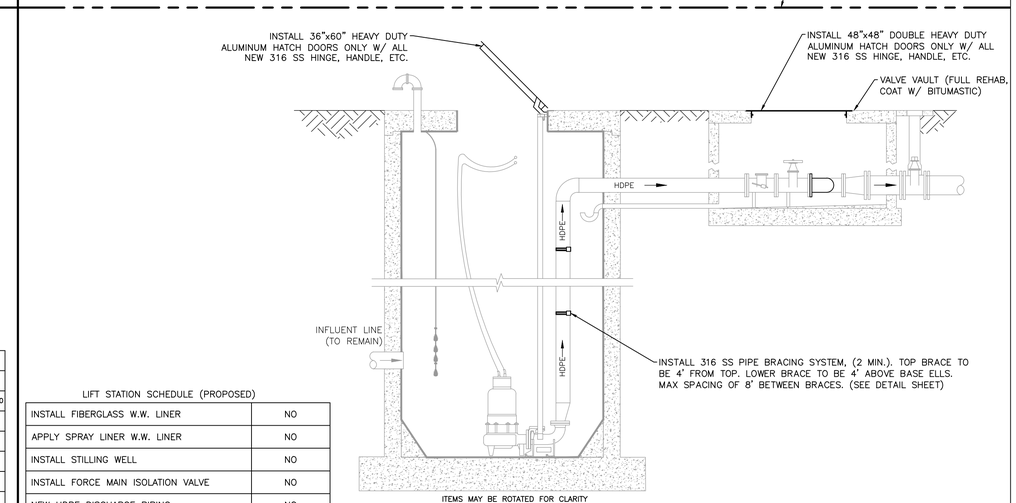

ITEMS MAY BE ROTATED FOR CLARITY

ELEVATION
EX. 2 PUMP LIFT STATION
NTS

LIFT STATION SCHEDULE (PROPOSED)

INSTALL FIBERGLASS W.W. LINER	NO
APPLY SPRAY LINER W.W. LINER	NO
INSTALL STILLING WELL	NO
INSTALL FORCE MAIN ISOLATION VALVE	NO
NEW HDPE DISCHARGE PIPING	NO
NEW BASE ELL	NO
MODIFY WET WELL WALLS (RAISE/LOWER) RIM:	NO
MODIFY TOP OF VALVE VAULT	NO
INSTALL WET WELL VENT PIPE	NO
INSTALL NEW WATER SERVICE ASSEMBLY	NO
RELOCATE EX. WATER SERVICE ASSEMBLY	NO

CONSTRUCTION NOTES:

1. CONTRACTOR TO CALL 811 PRIOR TO COMMENCING WORK. PROTECT AND SUPPORT ALL EXISTING UNDERGROUND UTILITIES (MANATEE COUNTY / OTHERS) IN THE ROW OR ADJACENT AREAS.
2. ANY ELECTRICAL WIRING THAT IS INSTALLED BETWEEN THE LIFT STATION WET WELL AND VAULTS SHALL BE INSTALLED IN A CARRIER PIPE THAT IS STRAPPED TO THE STRUCTURE.
3. REMOVE AND INSTALL ALL NEW ONE-SIDED ELECTRICAL STRUCTURE (RACK), A CONTROL PANEL, TCU ENCLOSURE, JUNCTION BOX ENCLOSURE, A METER CAN, AND A SAFETY SWITCH (DISCONNECT). ALL EXISTING ELECTRICAL EQUIPMENT CONNECTED TO THE EXISTING CONTROL PANEL SHALL BE RE-ESTABLISHED TO THE NEW PANEL. THE NEW ELECTRICAL STRUCTURE SHALL BE FIELD LOCATED WITH MANATEE COUNTY PERSONNEL. GENERATOR RECEPTACLE SHALL BE INSTALLED IN A REMOTE LOCATION. CONTRACTOR RESPONSIBLE FOR VERIFYING SIZE OF RACK TO HOLD ALL PROPOSED ELECTRICAL ENCLOSURES/COMPONENTS.

   A TCU BUBBLER UNIT (RPT-001) SYSTEM PROVIDED AND INSTALLED BY DATA FLOW SYSTEMS (DFS) FOR WET WELL LEVEL CONTROL AND SHALL BE INCLUDED WITH THE CONTROL PANEL.
4. THE LIFT STATION SITE HAS AUXILIARY BACKUP EQUIPMENT. INSTALL THREE ADDITIONAL 20 AMP BREAKERS IN THE CONTROL PANEL TO POWER A BATTERY CHARGER, WATER JACKET HEATER, SPACER HEATER.
5. AN ELECTRICAL SYSTEM STUDY, ELECTRICAL STUDY ANALYSIS, AND PROPER LABELING IN COMPLIANCE WITH NFPA 70E "STANDARD FOR ELECTRICAL SAFETY IN THE WORKPLACE" AND IEEE 1584 2018 "GUIDE FOR PERFORMING ARC FLASH HAZARDS CALCULATIONS" SHALL BE PROVIDED.
6. DAMAGED EXISTING PROTECTIVE LINER(S) AND DETERIORATED WET WELL CONCRETE WALLS SHALL BE INSPECTED BY COUNTY PERSONNEL PRIOR TO REMOVAL AND INSTALLATION OF CONCRETE REPAIR AND/OR INSTALLATION OF NEW PROTECTIVE LINER(S) AND/OR LINER REPAIR.
7. CONTRACTOR TO INSTALL WELDED JOINT CAP SEALS ON EXISTING LINER JOINTS (4 TYP.) PER THE MANUFACTURER'S RECOMMENDATION. COORDINATE WITH COUNTY PERSONNEL PRIOR TO INSTALLATION.
8. REGRADE SITE TO ALLOW FOR A POSITIVE DRAINAGE SLOPE AWAY FROM THE LIFT STATION AREA TOWARDS THE SURROUNDING DITCHES. MAXIMUM OF 1% SLOPE.
9. INSTALL NEW PVC HOSE BIBB POST TO BE COORDINATED WITH COUNTY PERSONNEL.

QUESTIONS / COMMENTS:
1. WATER DISTRIBUTION IS PUBLIC.
2. SEWER COLLECTION IS PUBLIC.

NO.	REVISION DESCRIPTION	BY	DATE

Know what's below
Call before you dig

SATELLITE LIFT STATION R&R

2024 GROUP 1

SR-70, RTU 381

Manatee County FLORIDA

PUBLIC WORKS DEPARTMENT
ENGINEERING SERVICES
1022 26th Avenue East, Bradenton, FL 34208

PROJECT #	402-5163887	
SURVEY #	NA	
SEC./TWN./RGE	16/35/18	
SCALE	N.T.S.	
	BY	DATE
SURVEYED	NA	NA
DESIGNED	JSS	5/2023
DRAWN	JKW	5/2023
CHECKED	JSS	-

J. SHEA SHOUN, P.E.
LICENSE No. 60923
STATE OF FLORIDA
PROFESSIONAL ENGINEER
09/21/2023
Signature Date

SHEET 05 OF 11

H:\Civil Eng Design\Projects\SAN SWR Proj\San Swr - LS Upgrades\SS R&R 2024 Group 1\DWGS\SS R&R 2024-1.dwg,SR-70, 9/21/2023 8:47 AM Kyle Wright, 1:1, ANSI full bleed D (34.00 x 22.00 inches), MC-2016.stb

EXISTING

NOTES:

1. THE WET WELL AND VALVE VAULT CONFIGURATION SHOWN ON THESE GRAPHICS IS FOR IDENTIFICATION OF COMPONENTS TO BE REMOVED. THE CONTRACTOR SHALL FIELD VERIFY ALL EXISTING CONDITIONS, ELEVATIONS, CONFIGURATION, ETC. FOR ACCURACY.
2. CONTRACTOR SHALL FIELD VERIFY ALL EXISTING CONDITIONS AND DIMENSIONS.
3. THE CONTRACTOR SHALL DETERMINE THE DISCHARGE PIPING ELEVATIONS DURING THE SITE VISITS.
4. REMOVAL AND REINSTALLATION OF THE PUMPS DURING THE REHABILITATION SHALL BE DONE BY MANATEE COUNTY PERSONNEL IN COORDINATION WITH THE CONTRACTOR
5. BY-PASS PUMPING IS THE RESPONSIBILITY OF THE CONTRACTOR.
6. MANATEE COUNTY GOVERNMENT WILL PROVIDE ONE (1) LIFT STATION SHUT-DOWN AT NO COST TO THE CONTRACTOR. ADDITIONAL SHUT-DOWNS WILL COST THE CONTRACTOR $3,500 EACH, IF NEEDED.
7. THE CONTRACTOR IS RESPONSIBLE FOR RESTORING ANY DAMAGED LANDSCAPING TO EXISTING OR DESIGN CONDITIONS.
8. THE WORK AREA IS LIMITED TO THE LIFT STATION SITE.

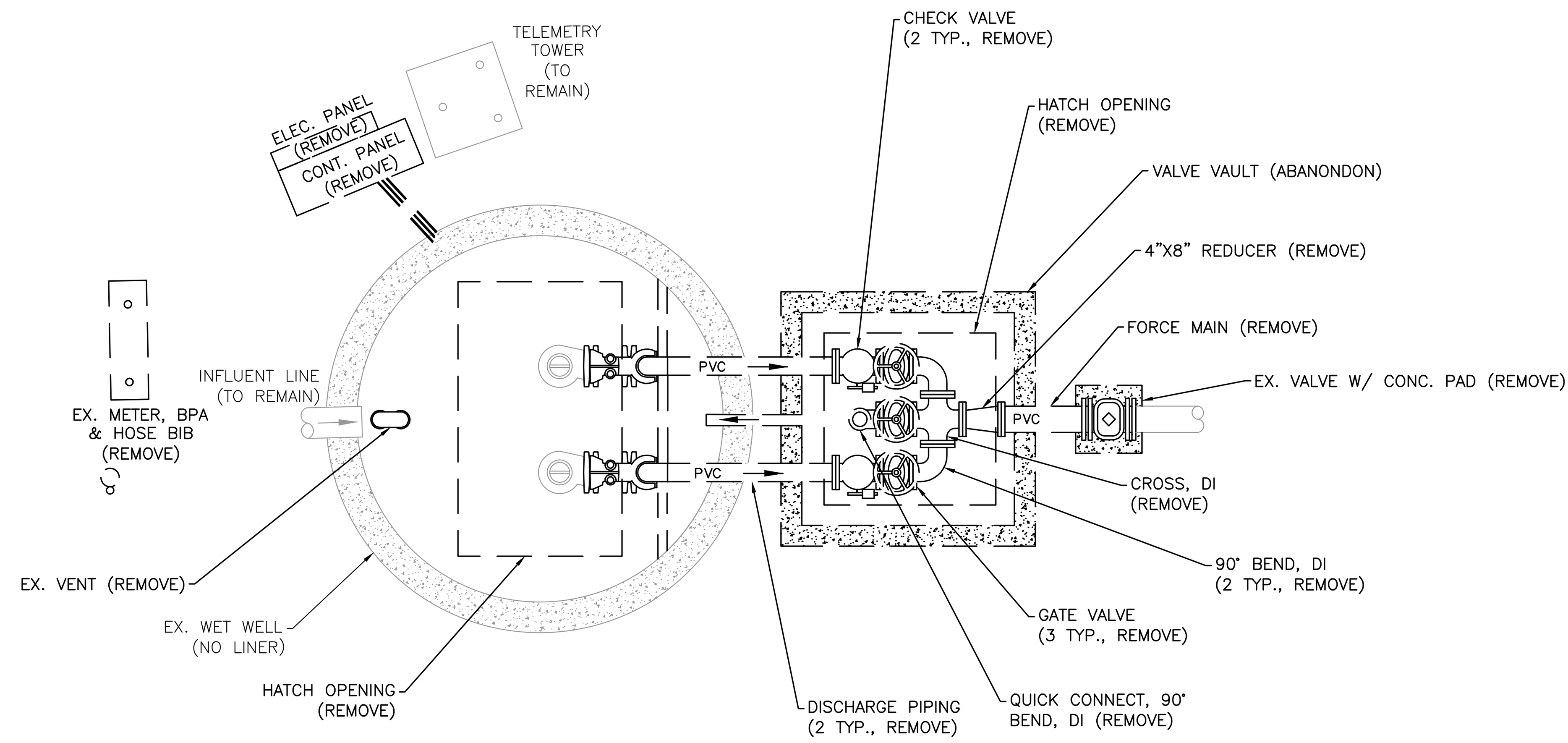

PLAN

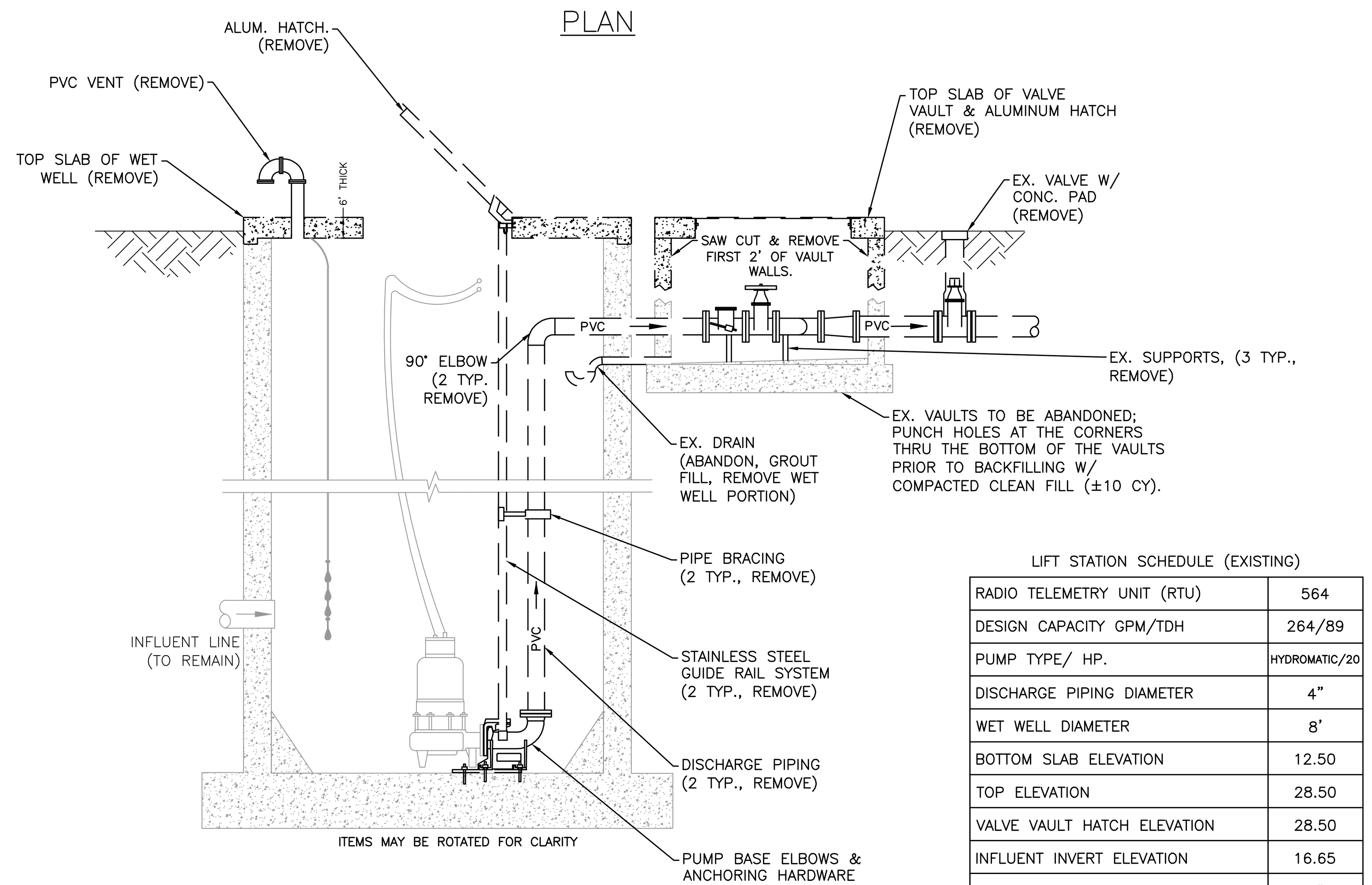

ELEVATION
EX. 2 PUMP LIFT STATION
NTS

LIFT STATION SCHEDULE (EXISTING)

RADIO TELEMETRY UNIT (RTU)	564
DESIGN CAPACITY GPM/TDH	264/89
PUMP TYPE/ HP.	HYDROMATIC/20
DISCHARGE PIPING DIAMETER	4"
WET WELL DIAMETER	8'
BOTTOM SLAB ELEVATION	12.50
TOP ELEVATION	28.50
VALVE VAULT HATCH ELEVATION	28.50
INFLUENT INVERT ELEVATION	16.65
INFLUENT PIPE SIZE	8"
FORCE MAIN DIAMETER	6"
WET WELL VENT PIPE	PVC, 6"
ELECT. POWER, VOLTS/PH	240/3
ELECT. SERVICE SIZE, AMPS	200
EX. FORCEMAIN TIE-IN	FM

* INFORMATION TAKEN FROM LIFT STATION DATA FILE (LSINFO.XLS 2020) & RECORD DRAWINGS. DATUM OF ELEVATIONS IS UNKNOWN.

PROPOSED

GENERAL NOTES:

1. ALL MATERIALS AND INSTALLATION SHALL BE IN ACCORDANCE WITH THE LATEST MANATEE COUNTY PUBLIC WORKS UTILITY STANDARDS. ALL HORIZONTAL AND VERTICAL DISTANCES AND MEASUREMENTS SHALL BE FIELD VERIFIED PRIOR TO ORDERING MATERIALS AND COMMENCING WORK. ALL MEASUREMENTS AND CALCULATIONS SHALL BE THE RESPONSIBILITY OF THE AWARDED CONTRACTOR.
2. THE CONCRETE SHALL BE GIVEN A BROOM FINISH. THE SURFACE VARIATIONS SHALL BE NOT MORE THAT 1/4" UNDER A TEN FOOT (10') STRAIGHTEDGE, NOT MORE THAN 1/8" ON A FIVE FOOT (5') TRANSVERSE SECTION. THE EDGE OF THE CONCRETE PAD SHALL BE CAREFULLY FINISHED WITH AN EDGING TOOL HAVING A RADIUS OF 1/2".
3. EXPANSION JOINT: EXPANSION JOINTS BETWEEN THE CONC. PAD AND THE WET WELL SHALL BE 1/2" MATERIAL AND SHALL MEET THE REQUIREMENTS OF AASHTO M153 OR AASHTO M213.
4. THE EXTERIOR SURFACES OF THE CONCRETE WET WELL AND VALVE PAD EXPOSED ABOVE GRADE SHALL BE COATED WITH AT LEAST TWO COATS OF H & C SILICONE ACRYLIC CONCRETE STAIN, PATIO GREEN, MANUFACTURED BY FLR PAINTS. THE ABOVE GROUND VALVE ASSEMBLY & PIPING SHALL BE PAINTED, RUSTOLEUM 7538 HUNTER GREEN. CONTRACTOR SHALL TAKE PRECAUTIONS TO PREVENT OVER-SPRAY OF PAINT ONTO THE CONCRETE SLAB.
5. ALL PAINTING SHALL BE INCLUDED IN THE BID ITEM TO BE PAINTED.

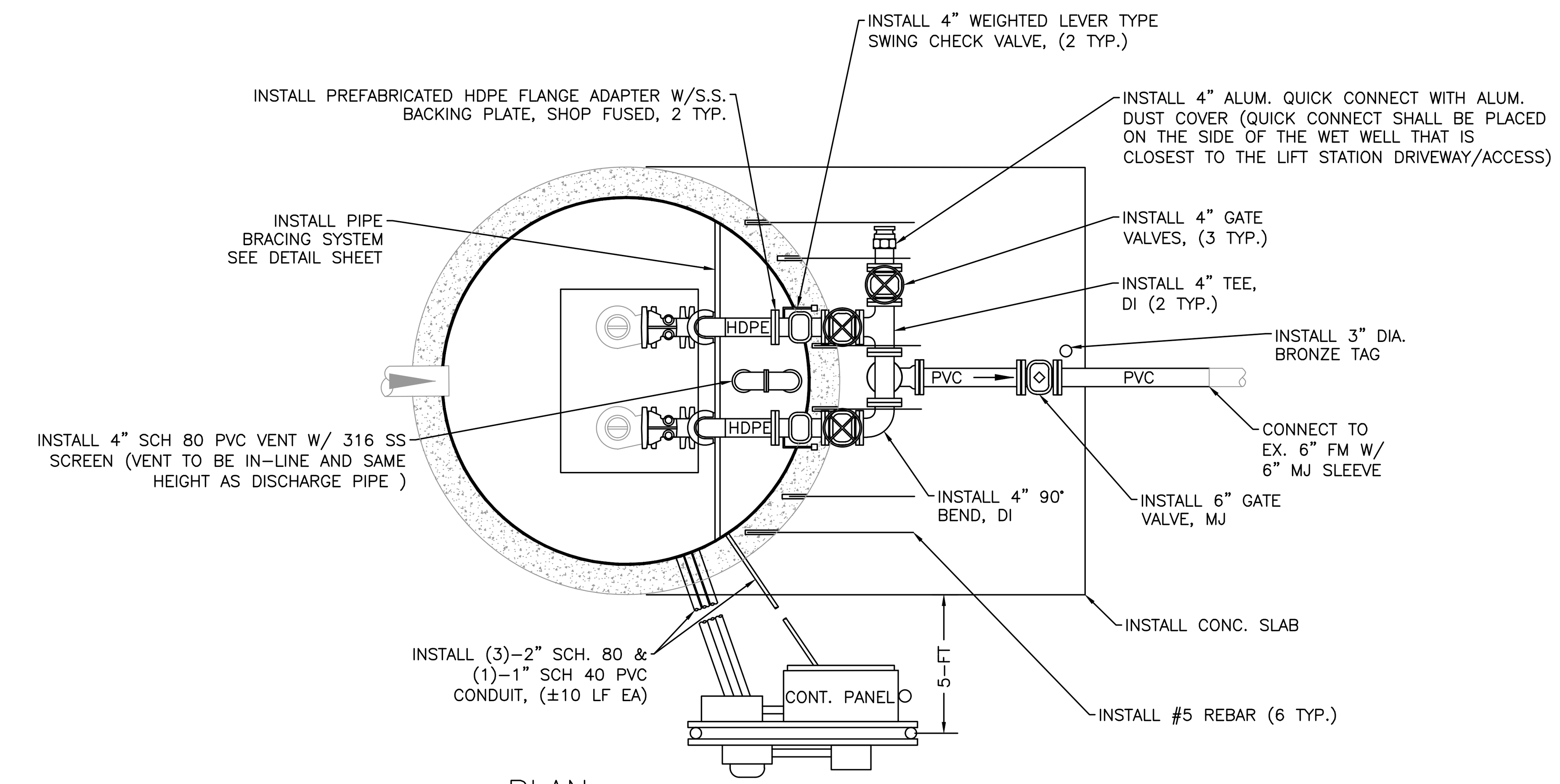

PLAN

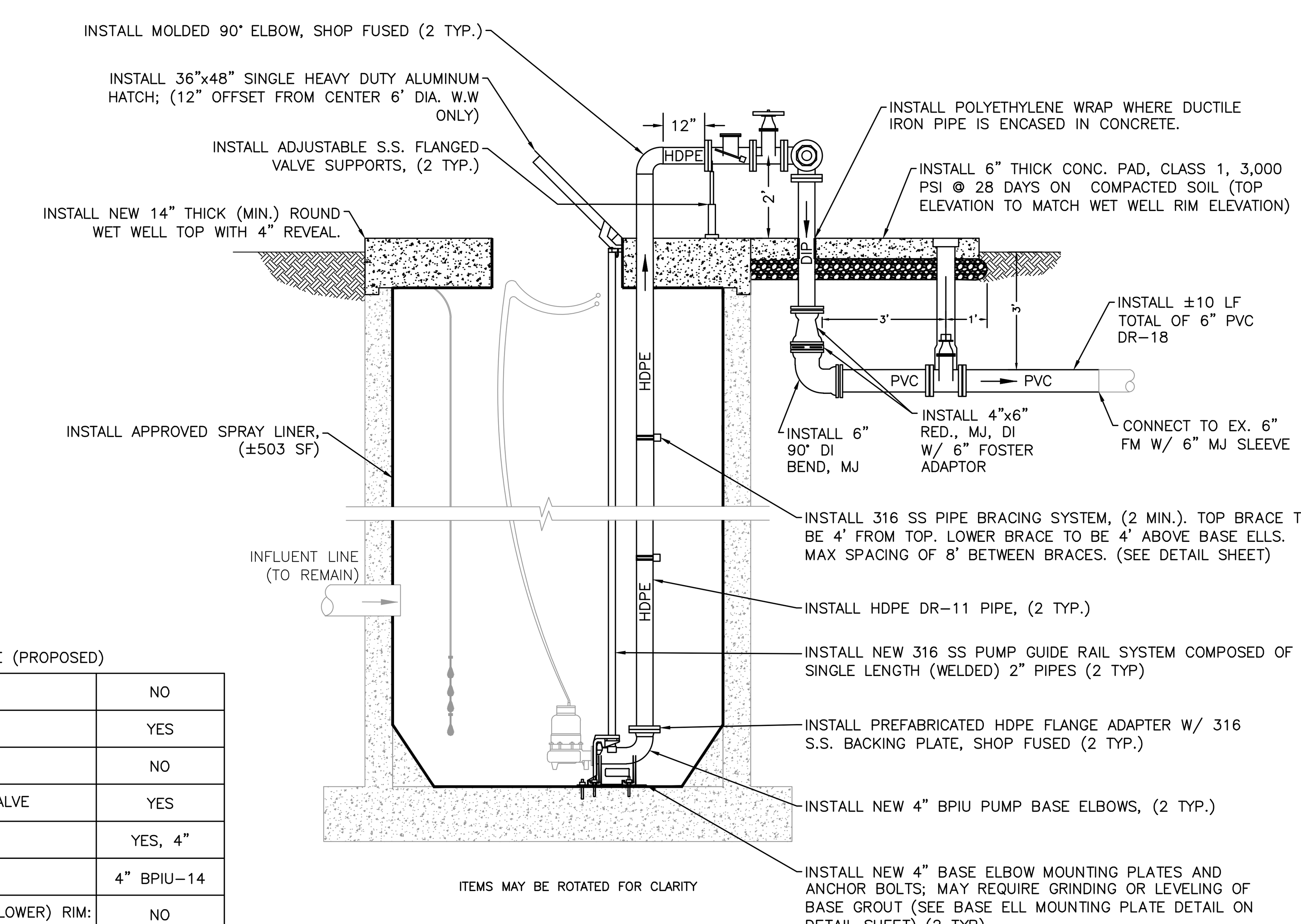

ELEVATION
EX. 2 PUMP LIFT STATION
NTS

LIFT STATION SCHEDULE (PROPOSED)

INSTALL FIBERGLASS W.W. LINER	NO
APPLY SPRAY LINER W.W. LINER	YES
INSTALL STILLING WELL	NO
INSTALL FORCE MAIN ISOLATION VALVE	YES
NEW HDPE DISCHARGE PIPING	YES, 4"
NEW BASE ELL	4" BPIU-14
MODIFY WET WELL WALLS (RAISE/LOWER) RIM:	NO
MODIFY TOP OF VALVE VAULT	N/A
INSTALL WET WELL VENT PIPE	YES
INSTALL NEW WATER SERVICE ASSEMBLY	YES
RELOCATE EX. WATER SERVICE ASSEMBLY	NO

CONSTRUCTION NOTES:

1. INSTALL ±50 LF NEW ELECTRICAL SERVICE WITH CONDUIT. COUNTY WILL SUPPLY ALL REQUIRED HANDHOLES.
2. REMOVE AND INSTALL ALL NEW ELECTRICAL STRUCTURE (RACK), A CONTROL PANEL, TCU ENCLOSURE, JUNCTION BOX ENCLOSURE, A METER CAN, AND A SAFETY SWITCH (DISCONNECT). ALL EXISTING ELECTRICAL EQUIPMENT CONNECTED TO THE EXISTING CONTROL PANEL SHALL BE RE-ESTABLISHED TO THE NEW PANEL. NEW ELECTRICAL STRUCTURE SHALL BE FIELD LOCATED WITH MANATEE COUNTY PERSONNEL. CONTRACTOR RESPONSIBLE FOR VERIFYING SIZE OF RACK TO HOLD ALL PROPOSED ELECTRICAL ENCLOSURES/COMPONENTS.

   A TCU BUBBLER UNIT (RPT-001) SYSTEM PROVIDED AND INSTALLED BY DATA FLOW SYSTEMS (DFS) FOR WET WELL LEVEL CONTROL SHALL BE INCLUDED WITH THE CONTROL PANEL.
3. AN ELECTRICAL SYSTEM STUDY, ELECTRICAL STUDY ANALYSIS, AND PROPER LABELING IN COMPLIANCE WITH NFPA 70E "STANDARD FOR ELECTRICAL SAFETY IN THE WORKPLACE" AND IEEE 1584 2018 "GUIDE FOR PERFORMING ARC FLASH HAZARDS CALCULATIONS" SHALL BE PROVIDED.
4. INSTALL #5 REBAR (6 TYP.) EPOXY EMBEDDED INTO THE WET WELL TOP 3-4 INCHES DEEP AND CAST 3-4 FEET INTO THE VALVE ASSEMBLY CONCRETE PAD TO ENSURE THE TOPS OF THE WET WELL AND VALVE ASSEMBLY PAD WILL REMAIN FLUSH.
5. REPAIR CONCRETE WALLS, AS NEEDED, IN WET WELL, 2-INCH MIN. THICK OVER EXISTING REBAR, (±252 SF). ALL REPAIRS TO BE VERIFIED WITH COUNTY PERSONNEL PRIOR TO WORK.
6. WET WELL CONCRETE WALLS SHALL BE INSPECTED BY COUNTY PERSONNEL PRIOR TO INSTALLATION OF NEW SPRAY LINER AND/OR LINER REPAIR.
7. INSTALL A NEW 2-INCH WATER SERVICE AND 8""x2" TAPPING SADDLE; A 2-INCH METER/BPA ASSEMBLY, A 3/4-INCH HOSE BIBB ASSEMBLY, AND A 2-INCH QUICK CONNECT PER COUNTY STANDARDS VIA HORIZONTAL DIRECTIONAL DRILL. THE EXISTING WATER MAIN IS LOCATED IN THE ROW ON THE OTHER SIDE OF THE ROADWAY. THE METER/BPA SHALL BE LOCATED AS CLOSE AS POSSIBLE TO THE FENCE / EASEMENT / RIGHT-OF-WAY LINE IN CLOSEST PROXIMITY TO THE WATER DISTRIBUTION MAIN. ALL ITEMS SHALL BE FIELD LOCATE WITH MANATEE COUNTY PERSONNEL, (±83 LF).
8. ABANDON EXISTING WATER SERVICE SADDLE AND CORPORATION AT THE MAIN; INSTALL A BRASS PLUG IN CORPORATION STOP.
9. INSTALL A 12-FT WIDE 6-INCH THICK REINFORCE CONCRETE STANDARD DRIVEWAY. EXACT LOCATION AND LAYOUT SHALL BE DETERMINED IN THE FIELD WITH COUNTY PERSONNEL, (±45 SY).
10. REGRADE SITE TO ALLOW FOR A POSITIVE DRAINAGE SLOPE AWAY FROM THE LIFT STATION AREA TOWARDS THE SURROUNDING DITCHES. MAXIMUM OF 1% SLOPE.

NOTES:
1. LIFT STATION LOCATED IN ITS OWN AREA
2. WATER IS PUBLIC
3. SEWER IS PUBLIC

NO.	REVISION DESCRIPTION	BY	DATE

Know what's below
Call before you dig

SATELLITE LIFT STATION R&R

2024 GROUP 1

RIVERWOODS 1, RTU 564

PUBLIC WORKS DEPARTMENT
ENGINEERING SERVICES
1022 26th Avenue East, Bradenton, FL 34208

PROJECT #	402-5163886	
SURVEY #	NA	
SEC./TWN./RGE	12/34/18	
SCALE	N.T.S.	
	BY	DATE
SURVEYED	NA	NA
DESIGNED	JSS	5/2023
DRAWN	JKW	5/2023
CHECKED	JSS	-

J. SHEA SHOUN, P.E.
FLORIDA P.E. # 60923
JOHN S. SHOUN LICENSE No. 60923 STATE OF FLORIDA PROFESSIONAL ENGINEER 09/21/2023
Signature & Date

H:\Util Eng Design\PROJ\~SAN SWR Proj\San Swr - LS Upgrades\SLS R&R 2024 Group 1\DWGS\SLS R&R 2024-1.dwg,RIVERWOODS 1, 9/21/2023 8:47 AM Kyle Wright, 1:1, ANSI full bleed D (34.00 x 22.00 Inches), MC-2016.STB

EXISTING

NOTES:
1. THE WET WELL AND VALVE VAULT CONFIGURATION SHOWN ON THESE GRAPHICS IS FOR IDENTIFICATION OF COMPONENTS TO BE REMOVED. THE CONTRACTOR SHALL FIELD VERIFY ALL EXISTING CONDITIONS, ELEVATIONS, CONFIGURATION, ETC. FOR ACCURACY.
2. CONTRACTOR SHALL FIELD VERIFY ALL EXISTING CONDITIONS AND DIMENSIONS.
3. THE CONTRACTOR SHALL DETERMINE THE DISCHARGE PIPING ELEVATIONS DURING THE SITE VISITS.
4. REMOVAL AND REINSTALLATION OF THE PUMPS DURING THE REHABILITATION SHALL BE DONE BY MANATEE COUNTY PERSONNEL IN COORDINATION WITH THE CONTRACTOR
5. BY-PASS PUMPING IS THE RESPONSIBILITY OF THE CONTRACTOR.
6. MANATEE COUNTY GOVERNMENT WILL PROVIDE ONE (1) LIFT STATION SHUT-DOWN AT NO COST TO THE CONTRACTOR. ADDITIONAL SHUT-DOWNS WILL COST THE CONTRACTOR $3,500 EACH, IF NEEDED.
7. THE CONTRACTOR IS RESPONSIBLE FOR RESTORING ANY DAMAGED LANDSCAPING TO EXISTING OR DESIGN CONDITIONS.
8. THE WORK AREA IS LIMITED TO THE LIFT STATION SITE.

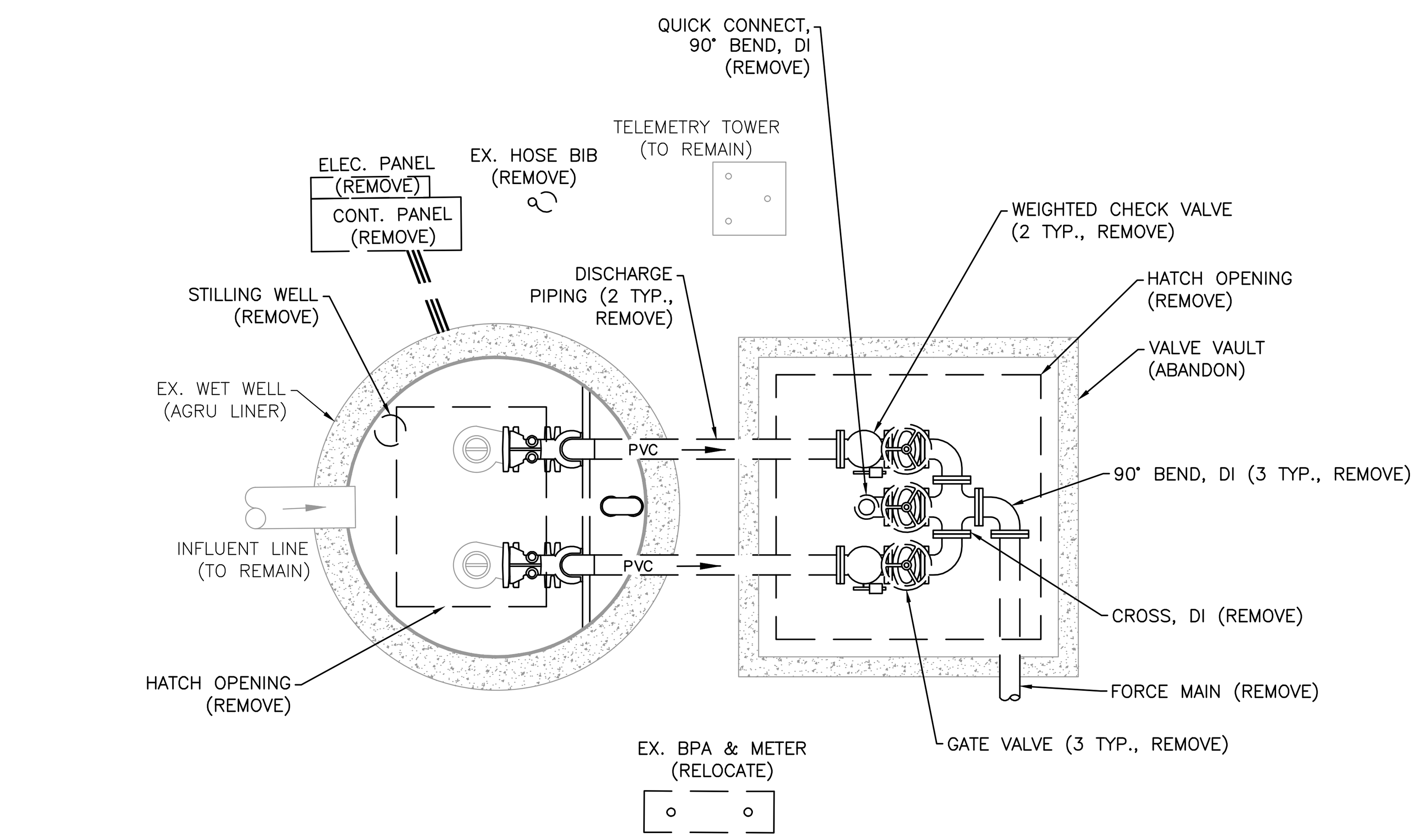

PLAN

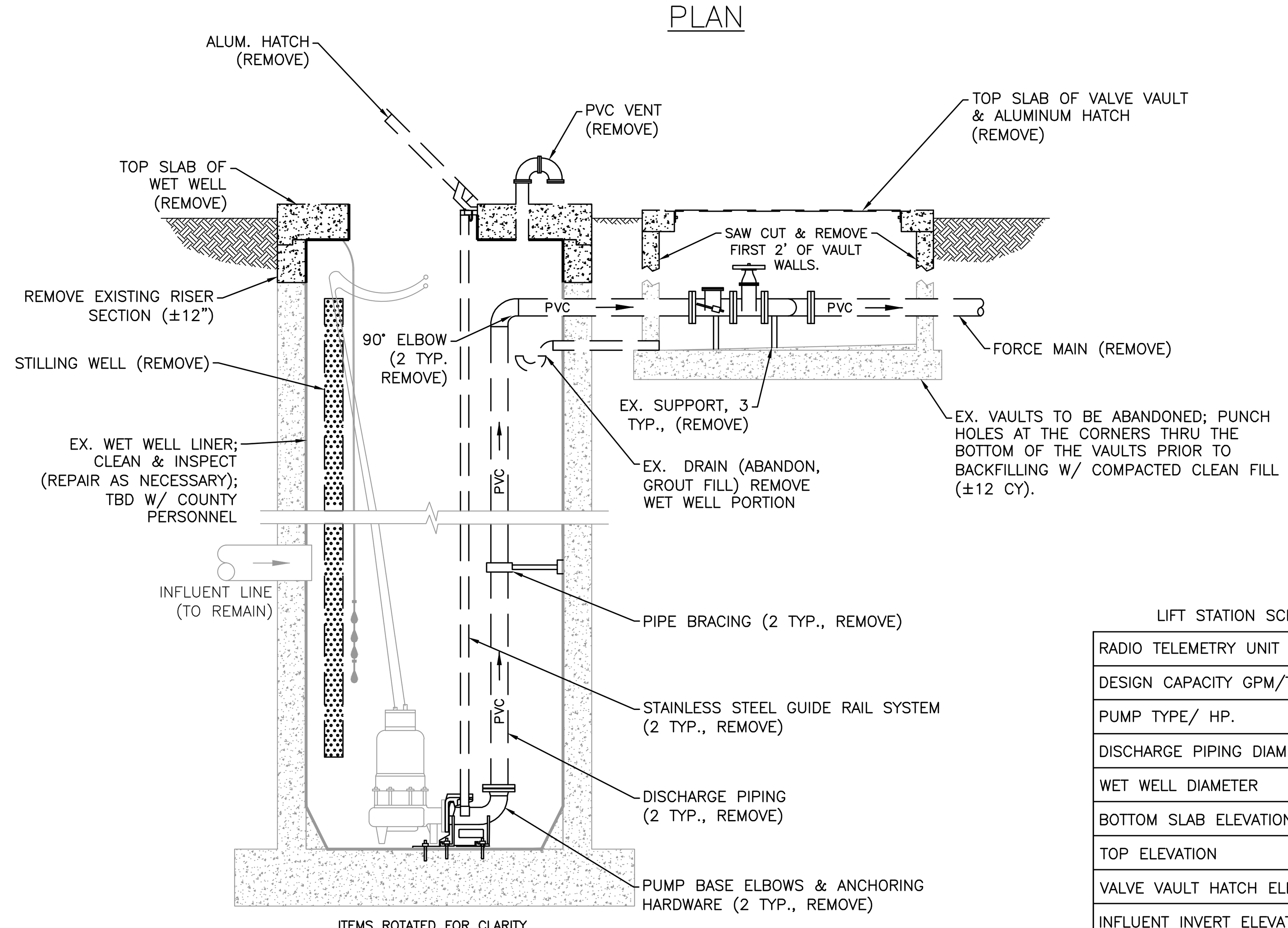

ELEVATION
EX. 2 PUMP LIFT STATION
NTS

LIFT STATION SCHEDULE (EXISTING)

RADIO TELEMETRY UNIT (RTU)	572
DESIGN CAPACITY GPM/TDH	200/86
PUMP TYPE/ HP.	ABS/10.4
DISCHARGE PIPING DIAMETER	4"
WET WELL DIAMETER	6'
BOTTOM SLAB ELEVATION	20.60
TOP ELEVATION	40.75
VALVE VAULT HATCH ELEVATION	40.75
INFLUENT INVERT ELEVATION	25.71
INFLUENT PIPE SIZE	8"
FORCE MAIN DIAMETER	4"
WET WELL VENT PIPE	PVC, 6"
ELECT. POWER, VOLTS/PH	240/3
ELECT. SERVICE SIZE, AMPS	150
EX. FORCEMAIN TIE-IN	FM

* INFORMATION TAKEN FROM LIFT STATION DATA FILE (LSINFO.XLS 2020) & RECORD DRAWINGS. DATUM OF ELEVATIONS IS UNKNOWN.

PROPOSED

GENERAL NOTES:
1. ALL MATERIALS AND INSTALLATION SHALL BE IN ACCORDANCE WITH THE LATEST MANATEE COUNTY PUBLIC WORKS UTILITY STANDARDS. ALL HORIZONTAL AND VERTICAL DISTANCES AND MEASUREMENTS SHALL BE FIELD VERIFIED PRIOR TO ORDERING MATERIALS AND COMMENCING WORK. ALL MEASUREMENTS AND CALCULATIONS SHALL BE THE RESPONSIBILITY OF THE AWARDED CONTRACTOR.
2. THE CONCRETE SHALL BE GIVEN A BROOM FINISH. THE SURFACE VARIATIONS SHALL BE NOT MORE THAT 1/4" UNDER A TEN FOOT (10') STRAIGHTEDGE, NOT MORE THAN 1/8" ON A FIVE FOOT (5') TRANSVERSE SECTION. THE EDGE OF THE CONCRETE PAD SHALL BE CAREFULLY FINISHED WITH AN EDGING TOOL HAVING A RADIUS OF 1/2".
3. EXPANSION JOINT: EXPANSION JOINTS BETWEEN THE CONC. PAD AND THE WET WELL SHALL BE 1/2" MATERIAL AND SHALL MEET THE REQUIREMENTS OF AASHTO M153 OR AASHTO M213.
4. THE EXTERIOR SURFACES OF THE CONCRETE WET WELL AND VALVE PAD EXPOSED ABOVE GRADE SHALL BE COATED WITH AT LEAST TWO COATS OF H & C SILICONE ACRYLIC CONCRETE STAIN, PATIO GREEN, MANUFACTURED BY FLR PAINTS. THE ABOVE GROUND VALVE ASSEMBLY & PIPING SHALL BE PAINTED, RUSTOLEUM 7538 HUNTER GREEN. CONTRACTOR SHALL TAKE PRECAUTIONS TO PREVENT OVER-SPRAY OF PAINT ONTO THE CONCRETE SLAB.
5. ALL PAINTING SHALL BE INCLUDED IN THE BID ITEM TO BE PAINTED.

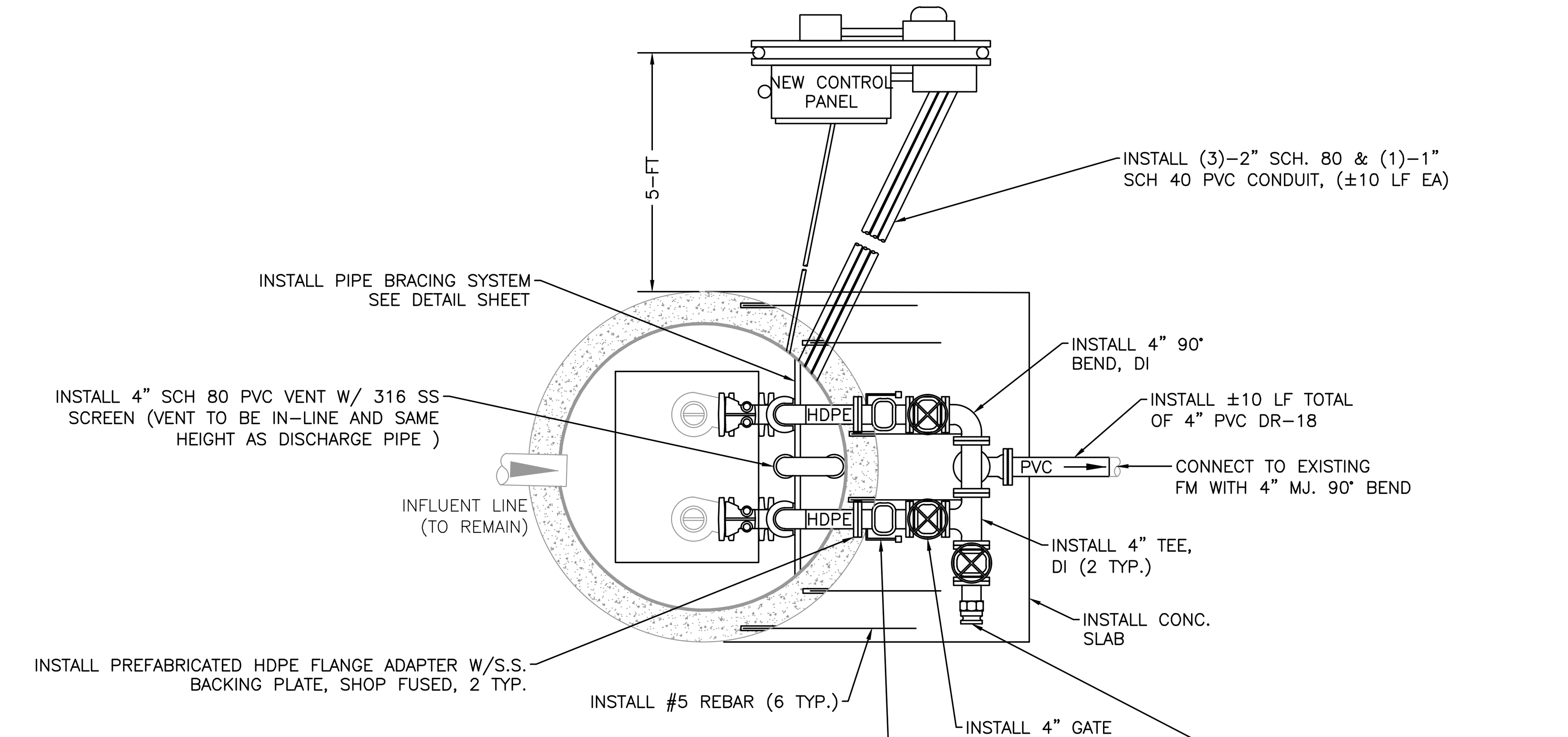

PLAN

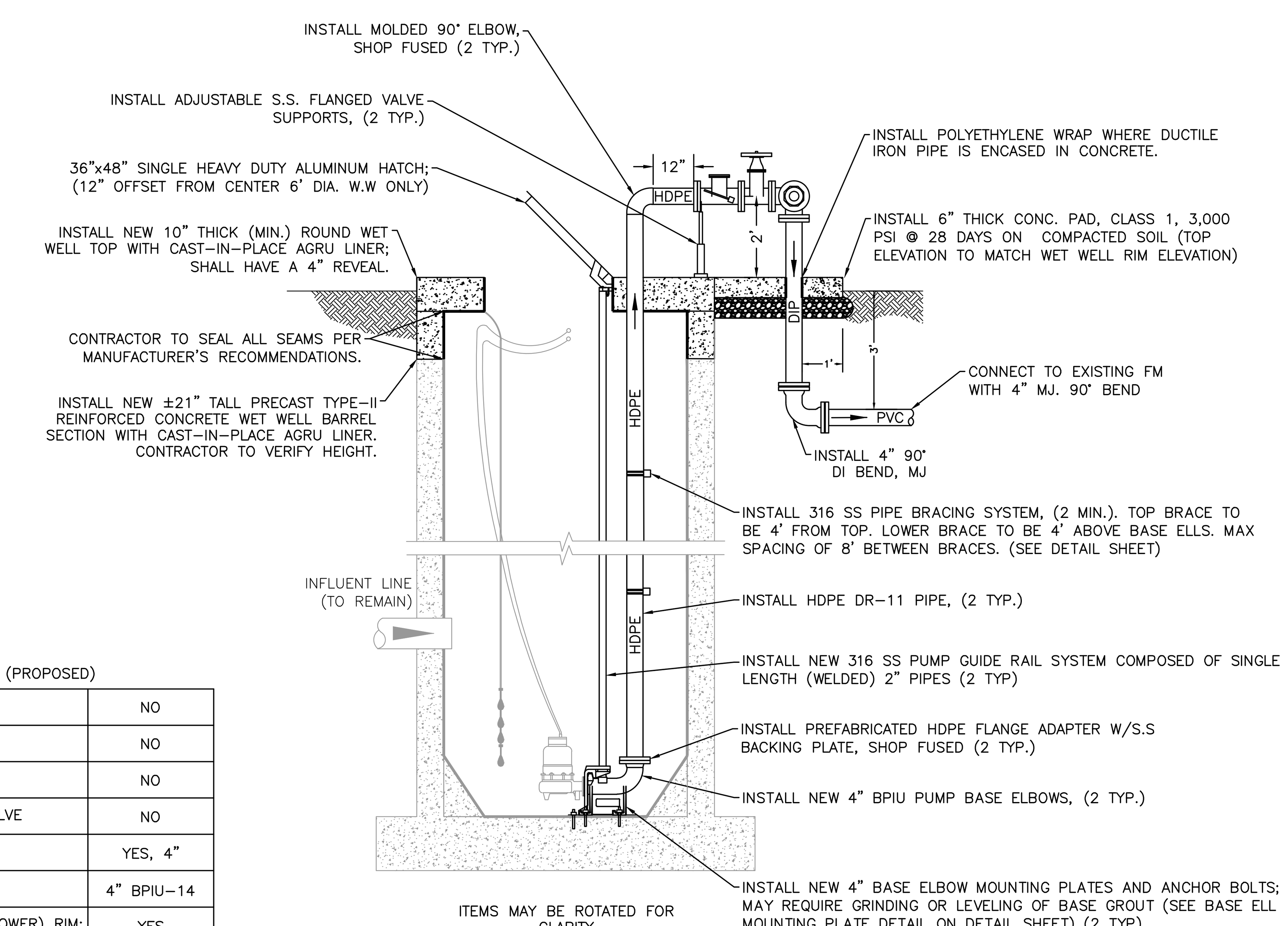

ELEVATION
EX. 2 PUMP LIFT STATION
NTS

LIFT STATION SCHEDULE (PROPOSED)

INSTALL FIBERGLASS W.W. LINER	NO
APPLY SPRAY LINER W.W. LINER	NO
INSTALL STILLING WELL	NO
INSTALL FORCE MAIN ISOLATION VALVE	NO
NEW HDPE DISCHARGE PIPING	YES, 4"
NEW BASE ELL	4" BPIU-14
MODIFY WET WELL WALLS (RAISE/LOWER) RIM:	YES
MODIFY TOP OF VALVE VAULT	N/A
INSTALL WET WELL VENT PIPE	YES
INSTALL NEW WATER SERVICE ASSEMBLY	NO
RELOCATE EX. WATER SERVICE ASSEMBLY	YES

CONSTRUCTION NOTES:
1. INSTALL ±10 LF NEW ELECTRICAL SERVICE WITH CONDUIT. COUNTY TO SUPPLY ANY REQUIRED HANDHOLES.
2. REMOVE AND INSTALL ALL NEW ELECTRICAL STRUCTURE (RACK), A CONTROL PANEL, TCU ENCLOSURE, JUNCTION BOX ENCLOSURE, A METER CAN, AND A SAFETY SWITCH (DISCONNECT). ALL EXISTING ELECTRICAL EQUIPMENT CONNECTED TO THE EXISTING CONTROL PANEL SHALL BE RE-ESTABLISHED TO THE NEW PANEL. NEW ELECTRICAL STRUCTURE SHALL BE FIELD LOCATED WITH MANATEE COUNTY PERSONNEL. CONTRACTOR RESPONSIBLE FOR VERIFYING SIZE OF RACK TO HOLD ALL PROPOSED ELECTRICAL ENCLOSURES/COMPONENTS.

   A TCU BUBBLER UNIT (RPT-001) SYSTEM PROVIDED AND INSTALLED BY DATA FLOW SYSTEMS (DFS) FOR WET WELL LEVEL CONTROL SHALL BE INCLUDED WITH THE CONTROL PANEL.
3. AN ELECTRICAL SYSTEM STUDY, ELECTRICAL STUDY ANALYSIS, AND PROPER LABELING IN COMPLIANCE WITH NFPA 70E "STANDARD FOR ELECTRICAL SAFETY IN THE WORKPLACE" AND IEEE 1584 2018 "GUIDE FOR PERFORMING ARC FLASH HAZARDS CALCULATIONS" SHALL BE PROVIDED.
4. INSTALL #5 REBAR (6 TYP.) EPOXY EMBEDDED INTO THE WET WELL TOP 3-4 INCHES DEEP AND CAST 3-4 FEET INTO THE VALVE ASSEMBLY CONCRETE PAD TO ENSURE THE TOPS OF THE WET WELL AND VALVE ASSEMBLY PAD WILL REMAIN FLUSH.
5. REPAIR CONCRETE WALLS, AS NEEDED, IN WET WELL, 2-INCH MIN. THICK OVER EXISTING REBAR, (±118 SF). ALL REPAIRS TO BE VERIFIED WITH COUNTY PERSONNEL PRIOR TO WORK.
6. DAMAGED EXISTING PROTECTIVE LINER(S) AND DETERIORATED WET WELL CONCRETE WALLS SHALL BE INSPECTED BY COUNTY PERSONNEL PRIOR TO REMOVAL AND INSTALLATION OF CONCRETE REPAIR AND/OR INSTALLATION OF NEW PROTECTIVE LINER(S) AND/OR LINER REPAIR.
7. RELOCATE THE EXISTING METER, BPA, & HOSE BIBB ASSEMBLY. THE METER AND BPA SHALL BE RELOCATED AS CLOSE AS POSSIBLE TO THE FENCE / EASEMENT / RIGHT-OF-WAY LINE IN CLOSEST PROXIMITY TO THE WATER DISTRIBUTION MAIN. FIELD LOCATE WITH MANATEE COUNTY PERSONNEL, (±15 LF)
8. REGRADE SITE TO ALLOW FOR A POSITIVE DRAINAGE SLOPE AWAY FROM THE LIFT STATION AREA TOWARDS THE SURROUNDING DITCHES. MAXIMUM OF 1% SLOPE.
9. REMOVE EX. PALM TREE ADJACENT TO VALVE VAULT AND SIDEWALK.

NOTES:
1. SEWER IS PUBLIC
2. WATER IS PUBLIC
3. ASSUME EX. 4" TAPPING VALVE BY EX. 10" FM CAN BE USED AS AN ISOLATION VALVE.

NO.	REVISION DESCRIPTION	BY	DATE

Know what's below
Call before you dig

SATELLITE LIFT STATION R&R
2024 GROUP 1
KINGSFIELD GROVES 1, RTU 572

PUBLIC WORKS DEPARTMENT
ENGINEERING SERVICES
1022 26th Avenue East, Bradenton, FL 34208

PROJECT #	402-5163885	
SURVEY #	NA	
SEC./TWN./RGE	06/34/19	
SCALE	N.T.S.	
	BY	DATE
SURVEYED	NA	NA
DESIGNED	JSS	5/2023
DRAWN	JKW	5/2023
CHECKED	JSS	-

J. SHEA SHOUN, P.E.
FLORIDA P.E. # 60923
JOHN S. SHOUN LICENSE No. 60923 STATE OF FLORIDA PROFESSIONAL ENGINEER 09/21/2023
Signature & Date

H:\Util Eng Design\PROJ\~SAN SWR Proj\San Swr - LS Upgrades\SLS R&R 2024 Group 1\DWGS\SLS R&R 2024-1.dwg,KINGSFIELD G. 1, 9/21/2023 8:47 AM Kyle Wright, 1:1, ANSI full bleed D (34.00 x 22.00 Inches), MC-2016.STB

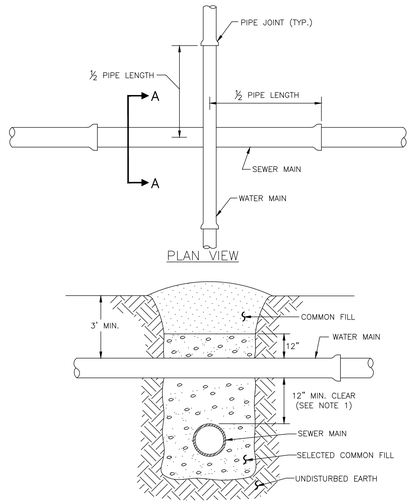

NOTES:

1. CLEARANCE MAY BE REDUCED TO 6" FOR GRAVITY SEWER WHERE WATER MAIN IS DUCTILE IRON.
2. PIPE SECTIONS SHALL BE FULL-LENGTH AND SHALL BE ADJUSTED HORIZONTALLY, SO THAT THE CROSSING IS AT EACH PIPE SECTION'S MIDPOINT REGARDLESS OF THE VERTICAL CLEARANCE.

MANATEE COUNTY PUBLIC WORKS DEPARTMENT

REV.BY	DATE

DATE OF APPROVAL

TYPICAL NEW WATER & SEWER LINE CROSSING — UG–2

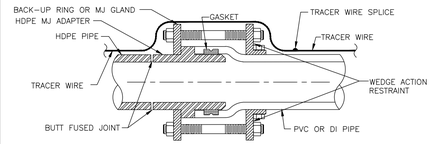

HDPE PIPE TO PVC PIPE / SPIGOT TO BELL CONNECTION

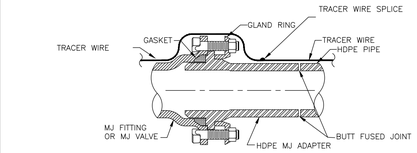

NOTE: SCHEMATIC SHOWN FOR STANDARD MJ FITTINGS AND GATE VALVES.

HDPE PIPE TO MJ FITTING TRANSITION

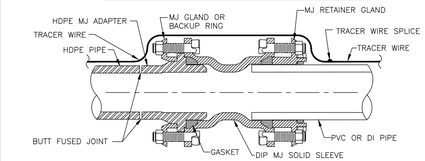

HDPE PIPE TO PVC PIPE SPIGOT TO SPIGOT CONNECTION

NOTES:

1. ONE TRACER WIRE SHALL BE SECURED TO THE PIPE FOR ALL TYPES OF PIPELINE INSTALLATIONS.
2. CONTRACTOR SHALL NOT USE MECHANICAL MEANS TO ALIGN PIPE AND FITTINGS FOR ATTACHMENT. THE PIPE SHALL NOT BE "SPRING" LOADED.

MANATEE COUNTY PUBLIC WORKS DEPARTMENT

REV.BY	DATE
JSS	6/22

DATE OF APPROVAL

HDPE PIPE TO PVC OR DI PIPE ADAPTER — UG–6

REQUIRED LENGTH OF RESTRAINED JOINT PIPE FOR C900-16 PVC PIPE (DR-18)

MAIN PIPE SIZE	HORIZ. BENDS			TEES					REDUCERS			PLUGS & VALVES
	90°	45°	22.5°	SIZE	LENGTH				SIZE	LENGTH		
24	90	38	18	X24 / 169	X20 / 132	X16 / 90	X12 / 38	X10 / 6	X20 / 64	X16 / 117	X12 / 158	214
20	78	32	16	X20 / 141	X16 / 101	X12 / 53	X10 / 24	X8 / 1	X16 / 65	X12 / 115	X10 / 149	184
16	66	27	13	X16 / 111	X12 / 67	X10 / 41	X8 / 12		X12 / 64	X10 / 107	X8 / 111	151
12	52	22	10	X12 / 80	X10 / 56	X8 / 31	X6 / 1		X10 / 58	X8 / 82	X6 / 86	118
10	44	18	9	X10 / 63	X8 / 40	X6 / 7			X8 / 33	X6 / 61	X4 / 81	100
8	37	15	7	X8 / 49	X6 / 18	X4 / 1			X6 / 35	X4 / 60		83
6	29	12	6	X6 / 29	X4 /				X4 / 33			63
4	21	8	4	X4 / 12								45

NOTES:

1. RESTRAIN 11.25° BENDS 50% OF LENGTH FOR 22.5° BENDS.
2. ALL VALVES AND FITTINGS SHALL BE RESTRAINED TO THE CONNECTING SECTIONS OF PIPE.
3. ALL ISOLATION VALVES MUST BE PROPERLY ANCHORED OR RESTRAINED TO RESIST A 180 PSI TEST PRESSURE IN EITHER DIRECTION.
4. PIPE SIZES ARE GIVEN IN INCHES.
5. RESTRAINED PIPE LENGTHS ARE GIVEN IN FEET.
6. LENGTHS SHOWN ARE FOR A TEST PRESSURE OF 180 PSI.
7. THE RESTRAINED LENGTHS SHOWN IN THESE TABLES ARE BASED ON SOIL CLASSIFICATION SP WITH AWWA TYPE 3 TRENCH CONDITIONS, 180 PSI TEST PRESSURE, 3 FEET OF COVER AND 1.5 FACTOR OF SAFETY. ACTUAL BURY CONDITIONS MUST BE DETERMINED BY THE ENGINEER OF RECORD AND THE RESTRAINED LENGTHS MODIFIED ACCORDINGLY.
8. RESTRAINED LENGTHS TO BE APPLIED TO PIPELINES PER DETAIL UG–10 RESTRAINED LENGTHS FOR PIPE.
9. ALL RESTRAINED JOINT HARDWARE SHALL CONFORM TO 1.11.17 OF THE PUBLIC WORKS UTILITIES STANDARDS MANUAL.
10. ALL THREE "LEGS" OF TEES SHALL BE RESTRAINED PER THE STATED LENGTH IN THE TABLE.

MANATEE COUNTY PUBLIC WORKS DEPARTMENT

REV.BY	DATE

DATE OF APPROVAL

RESTRAINED LENGTHS FOR PVC PIPE — UG–8

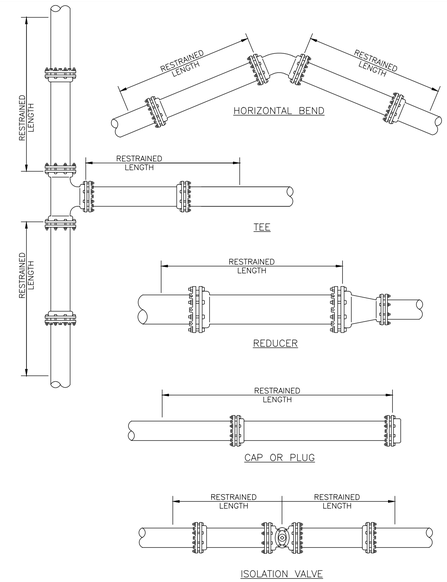

NOTE:

1. SEE DETAIL UG–8 RESTRAINED LENGTHS FOR PVC PIPE FOR NOTES 1 THROUGH 10 THAT ARE ALSO APPLICABLE TO RESTRAINED LENGTHS FOR PIPE.

MANATEE COUNTY PUBLIC WORKS DEPARTMENT

REV.BY	DATE

DATE OF APPROVAL

RESTRAINED LENGTHS FOR PIPE — UG–10

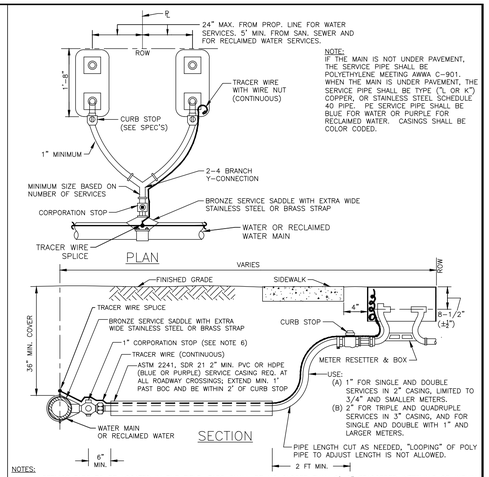

NOTE:
IF THE MAIN IS NOT UNDER PAVEMENT, THE SERVICE PIPE SHALL BE POLYETHYLENE MEETING AWWA C–901. WHEN THE MAIN IS UNDER PAVEMENT, THE SERVICE PIPE SHALL BE TYPE ("L" OR "K") COPPER, OR STAINLESS STEEL SCHEDULE 40 PIPE. PE SERVICE PIPE SHALL BE BLUE FOR WATER OR PURPLE FOR RECLAIMED WATER. CASINGS SHALL BE COLOR CODED.

NOTES:

1. ALL SERVICE TAPS TO BE LOCATED IN THE FIELD. TAPS SHALL BE NO CLOSER THAN 2'–0" STAGGERED INTERVALS OR WITHIN 2'–0" FROM BELL OR SPIGOT ENDS.
2. METER BOXES & RESETTERS ARE TO BE INSTALLED BY THE INFRASTRUCTURE CONTRACTOR AND SHALL NOT BE SET IN DRAINAGE SWALES, SIDEWALKS OR DRIVEWAYS, WITH PRIOR APPROVAL BY COUNTY. METER BOXES WITH LOCKABLE LIDS MAY BE LOCATED IN SIDEWALKS.
3. "W" OR "R" TO BE IMPRESSED INTO THE NEWLY POURED CONCRETE CURB AND INSTALL AN ALUMINUM BLUE DISC WITH "W" OR ALUMINUM PURPLE DISC WITH "R" AND THE FOOTAGE FROM THE DISC TO THE METER USING A 1/8"x 1" GALVANIZED STEEL SCREW IN THE EDGE OF PAVEMENT.
4. COLOR CODED TRACER WIRE SHALL BE INSTALLED WITH WATER AND RECLAIMED MAIN AND ALL SERVICES. SERVICE WIRE SHALL BE CONNECTED TO THE TRACER WIRE ALONG THE MAIN. ON DOUBLE SERVICES, WHEN SECOND METER IS OVER 8 FT APART, TWO TRACER WIRES SHALL BE INSTALLED; ONE FOR EACH METER.
5. WATER AND RECLAIMED WATER SERVICE LINES TO BE 5' MINIMUM FROM SEWER SERVICE PIPES.
6. FOR 2" SERVICES, REPLACE CORPORATION STOP WITH 2" RESILIENT WEDGE FIP GATE VALVE W/BOX, LID & TAG.
7. WHEN THE DISTANCE BETWEEN THE EDGE OF THE SIDEWALK AND THE ROW IS ONE FOOT (CUL–DE–SAC W/MEDIAN) A 10–FOOT–WIDE PUBLIC UTILITY EASEMENT SHALL BE LOCATED IN THE FRONT OF THE LOTS, ADJACENT TO THE ROW.
8. TEMPORARY RESIDENTIAL USE CAN BE PROVIDED BY CONTACTING THE UTILITY CUSTOMER SERVICE. SEE DETAIL UW–21.
9. SERVICE TUBING SHALL NOT BE CRIMPED OR KINKED TO RE–ADJUST CURB STOP LOCATION.

MANATEE COUNTY PUBLIC WORKS DEPARTMENT

REV.BY	DATE
JSS	6/22

DATE OF APPROVAL

TYPICAL SERVICE CONNECTION — UW–23

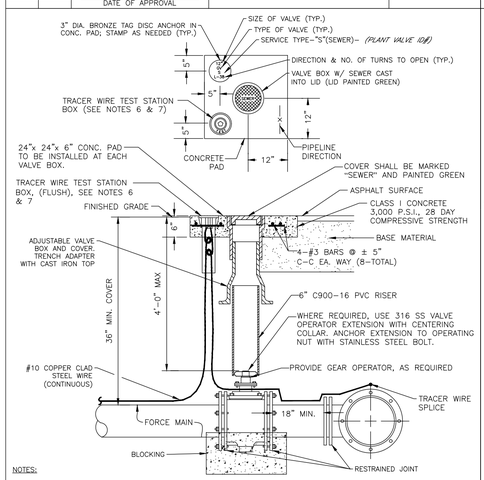

NOTES:

1. "S" TO BE IMPRESSED INTO THE NEWLY–POURED CONCRETE CURB AND INSTALL AN ALUMINUM GREEN DISC WITH "S" AND THE FOOTAGE FROM THE DISC TO THE VALVE USING A 1/8" x 1" GALVANIZED STEEL SCREW IN THE EDGE OF PAVEMENT.
2. ALL EXISTING AND PROPOSED VALVE BOXES SHALL BE ADJUSTED TO FINISHED GRADES AS DETERMINED IN THE FIELD.
3. VALVES SHALL NOT BE PLACED IN HANDICAPPED RAMPS, CURBS OR GUTTERS.
4. PRECAST CONCRETE PADS AND THRUST BLOCKS SHALL NOT BE USED.
5. ALL EXPOSED EDGES OF CONCRETE SHALL BE CHAMFERED 1/2".
6. USE NON–TRAFFIC RATED BOXES. WHERE VALVE WILL BE IN STREET OR PARKING UNDER VEHICLE TRAFFIC, USE TRAFFIC RATED BOXES. WHERE POSSIBLE, LOCATE TRACE WIRE TESTING STATION OUTSIDE OF TRAVEL LANE OR IN MEDIAN, CENTERED IN SEPARATE CONCRETE PAD SIMILAR TO STANDARD VALVE BOX PAD.
7. TRACER WIRE BOX SHALL BE LOCATED OUTSIDE THE ROADWAY ON THOROUGHFARES (COLLECTORS & ARTERIAL) AND STATE ROADWAYS.
8. SHOULD THE TRACER WIRE STATION BOX CONCRETE PAD OVERLAP A SIDEWALK, THE TRACER WIRE TEST STATION BOX SHALL NOT BE LOCATED WITHIN THE SIDEWALK.
9. THE BRASS TAG SHALL HAVE A "PLANT VALVE ID# WHEN VALVES ARE INSTALLED WITHIN THE COUNTY TREATMENT PLANT LIMITS. THE PLANT VALVE ID# SHALL BE SHOWN ON THE CONSTRUCTION PLANS AND RECORD DRAWINGS.
10. REFER TO SECTION 1.11 IN THE PUBLIC WORKS UTILITY STANDARDS MANUAL FOR FURTHER DETAILS.

MANATEE COUNTY PUBLIC WORKS DEPARTMENT

REV.BY	DATE
JSS	6/22

DATE OF APPROVAL

VALVE, BOX, COVER AND TAG — US–14

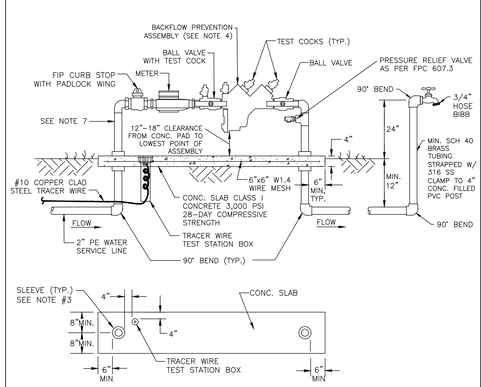

NOTES:

1. BACKFLOW PREVENTION ASSEMBLY DEVICE MUST BE INSTALLED DOWNSTREAM OF METER, AS CLOSE TO METER AS POSSIBLE.
2. COPPER PIPE TYPE ("K" OR "L") OR BRASS PIPE MINIMUM SCHEDULE 40 SHALL BE USED TO A MINIMUM DEPTH OF 12" BELOW GRADE.
3. PIPES PASSING THROUGH OR ENCASED IN CONCRETE MUST BE PROPERLY PROTECTED AND SLEEVED.
4. THE SYSTEM MUST MEET ALL REQUIREMENTS OF THE FLORIDA PLUMBING CODE (LATEST EDITION) AND CHAPTER 2–31, ARTICLE V OF THE MANATEE COUNTY CODE OF ORDINANCES.
5. ALL EXPOSED EDGES OF CONCRETE SHALL BE CHAMFERED 1/2".
6. BACKFLOW PREVENTER SHALL BE TESTED AT THE TIME OF INSTALLATION.
7. PRESSURE REDUCING VALVE REQUIRED UPSTREAM OF BACKFLOW PREVENTION ASSEMBLY, IF SYSTEM PRESSURE EXCEEDS 80 PSI.
8. 3' MIN. CLEARANCE FROM LANDSCAPING PLANTS AND 10' MIN. CLEARANCE FROM TREES TO EDGE OF CONCRETE SLAB AND CLEAR OPENING FOR ACCESS FROM STREET.
9. THE WATER METER AND BACKFLOW PREVENTION ASSEMBLY SHALL BE LOCATED AT THE ROW LINE. THE BACKFLOW PREVENTION ASSEMBLY FOR PRIVATE LIFT STATIONS SHALL BE LOCATED ADJACENT TO THE ROW LINE OR WITHIN AN EASEMENT OUTSIDE OF THE FENCING.
10. SATELLITE LIFT STATIONS SHALL HAVE A 2" WATER SERVICE LINE, A 5/8–INCH WATER METER, AND A 3/4–INCH REDUCED PRESSURE (RPZ) BACKFLOW PREVENTION ASSEMBLY, AND A SEPARATE POST MOUNTED HOSE BIBB. STATIONS WITH WET WELL DIAMETERS 10 FEET AND LARGER SHALL HAVE A 2–INCH METER AND RPZ BACKFLOW PREVENTION ASSEMBLY, AND AN ADDITIONAL 2" ALUMINUM QUICK CONNECT HOSE CONNECTION, SEE DETAILS US–22. ALL ITEMS SHALL BE FIELD LOCATED WITH COUNTY PERSONNEL.
11. BACKFLOW PREVENTION ASSEMBLIES USED FOR POTABLE APPLICATIONS SHALL BE LEAD FREE AS DEFINED IN THE REDUCTION OF LEAD IN DRINKING WATER ACT, SECTION 1417 OF THE SAFE DRINKING WATER ACT, 42 U.S.C. 300g–6, AS MAY BE AMENDED, AND IN COMPLIANCE WITH ALL APPLICABLE REGULATIONS

MANATEE COUNTY PUBLIC WORKS DEPARTMENT

REV.BY	DATE
JSS	6/22

DATE OF APPROVAL

5/8" WATER METER & BACKFLOW PREVENTION ASSEMBLY FOR LIFT STATIONS — US–21

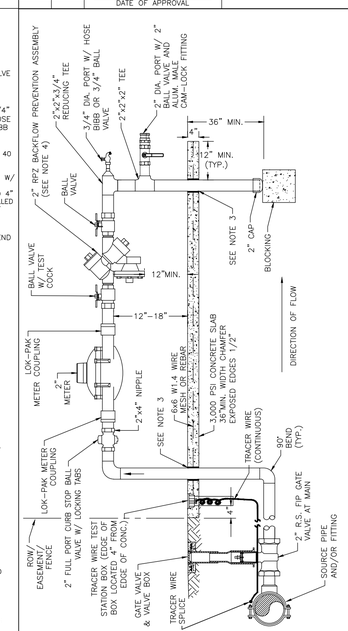

NOTES:

1. BACKFLOW PREVENTION ASSEMBLY MUST BE INSTALLED DOWNSTREAM OF METER, AS CLOSE TO METER AS POSSIBLE.
2. COPPER PIPE TYPE "L" (OR "K") OR BRASS PIPE MINIMUM SCHEDULE 40 SHALL BE USED TO A MINIMUM DEPTH OF 36" BELOW GRADE.
3. PIPES THROUGH SLAB AND ALL BELOW–GROUND D.I. PIPE AND FITTINGS SHALL BE POLYETHYLENE WRAPPED.
4. THE SYSTEM MUST MEET ALL REQUIREMENTS OF THE FLORIDA PLUMBING CODE (LATEST EDITION) AND CHAPTER 2–31, ARTICLE V OF THE MANATEE COUNTY CODE OF ORDINANCES.
5. METER, LOCK PACKS AND BRASS NIPPLES WILL BE PROVIDED BY MANATEE COUNTY. INSERT NIPPLES INTO LOCK PACKS HALF WAY.
6. ALL BURIED METER LOCK PACKS AND LOCK PACKS ALL ABOVE GROUND PIPING SHALL BE PAINTED SAFETY BLUE BY SCOTT PAINT (POTABLE WATER) OR PANTONE PURPLE 5220 (RECLAIMED WATER).
7. 3' MINIMUM CLEARANCE FROM LANDSCAPING PLANTS AND 10' MIN. CLEARANCE FROM TREES TO EDGE OF CONCRETE SLAB AND CLEAR OPENING FOR ACCESS FROM STREET.
8. ALL ABOVE GROUND PIPING SHALL BE PROTECTED BY A PERMANENT, RIGID, NON–CORROSIVE, NON–ABSORBENT, THERMAL INSULATION SUFFICIENT TO PREVENT FREEZING. FITTINGS AND CONNECTION FOR ABOVE–GROUND INSTALLATIONS SHALL ALLOW ANY MOVEMENT OR ROTATION OF THE BACKFLOW PREVENTION ASSEMBLIES.
9. SEE UW–2 GATE VALVE BOX, LID AND TAG DETAIL. CENTERING COLLAR NOT REQUIRED ON 2" OR SMALLER VALVES.
10. THE SYSTEM MUST MEET ALL REQUIREMENTS OF THE FLORIDA PLUMBING CODE (LATEST EDITION) AND REDUCTION OF LEAD IN DRINKING WATER ACT, SECTION 1417 OF THE SAFE DRINKING WATER ACT, 42 U.S.C. 300g–6, AS MAY BE AMENDED, AND IN COMPLIANCE WITH ALL APPLICABLE REGULATIONS.

MANATEE COUNTY PUBLIC WORKS DEPARTMENT

REV.BY	DATE
JSS	6/22

DATE OF APPROVAL

2" WATER METER AND BACKFLOW PREVENTION ASSEMBLY FOR LIFT STATIONS — US–22

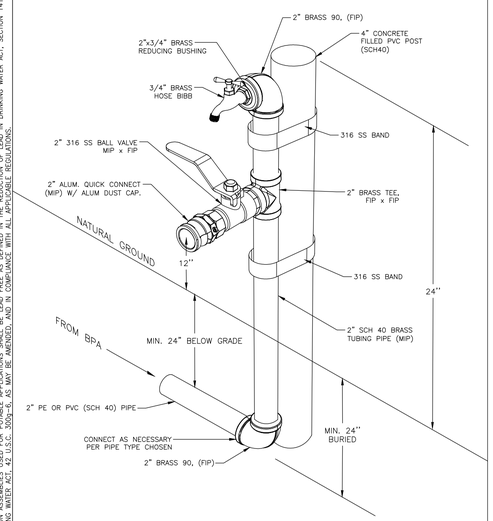

NOTES:

1. THE HOSE CONNECTION SHALL BE FIELD LOCATED WITH COUNTY PERSONNEL AND SHALL BE 24 INCHES ABOVE GRADE.
2. BRASS PIPE MINIMUM SCHEDULE 40 SHALL BE USED TO A MINIMUM DEPTH OF 24" BELOW GRADE.
3. FOR INSTALLATION OF THE WATER METER AND BACKFLOW PREVENTION ASSEMBLY, SEE DETAIL US–15.
4. THIS 2" & 3/4" COMBINATION HOSE CONNECTIONS IS TYPICALLY FOR LIFT STATION WITH WET WELL DIAMETERS 12 FEET AND LARGER.

MANATEE COUNTY PUBLIC WORKS DEPARTMENT

REV.BY	DATE

DATE OF APPROVAL

2" & 3/4" COMBINATION REMOTE HOSE CONNECTION FOR LIFT STATIONS — US–RHC

NO.	REVISION DESCRIPTION	BY	DATE

Know what's below
Call before you dig

SATELLITE LIFT STATION R&R

2024 GROUP 1

DETAILS1

PUBLIC WORKS DEPARTMENT
ENGINEERING SERVICES
1022 26th Avenue East, Bradenton, FL 34208

PROJECT #	402–0019707 / 5001301	
SURVEY #	NA	
SEC./TWN./RGE	VARIES	
SCALE	N.T.S	
	BY	DATE
SURVEYED	NA	NA
DESIGNED	JSS	5/2023
DRAWN	JKW	5/2023
CHECKED	JSS	–

J. SHEA SHOUN, P.E.
FLORIDA LICENSE No. 60923
STATE OF FLORIDA PROFESSIONAL ENGINEER
04/21/2023
Signature Date

SHEET 08 OF 11

R:\Civil Eng Design\PROJ\SAN SWR Proj\SAN Swr – LS Upgrades\SLS R&R 2024 Group 1\DWGS\SLS R&R 2024–1.dwg,DETAILS1, 9/21/2023 8:47 AM Kyle Wright, 1:1, ANSI full bleed D (34.00 x 22.00 inches), MC–2016.STB

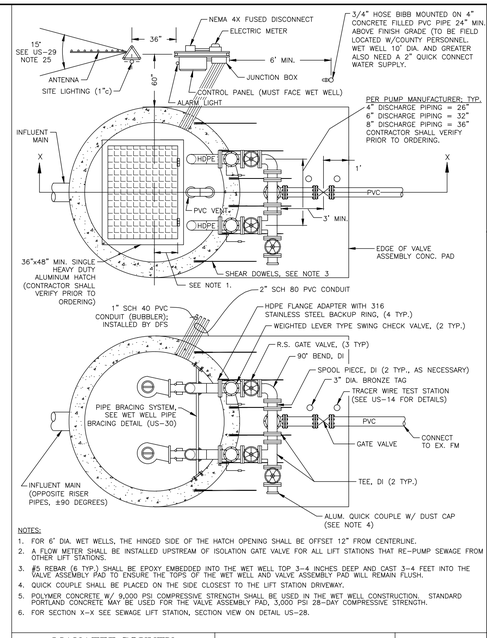

NOTES:

1. FOR 6' DIA. WET WELLS, THE HINGED SIDE OF THE HATCH OPENING SHALL BE OFFSET 12" FROM CENTERLINE.
2. A FLOW METER SHALL BE INSTALLED UPSTREAM OF ISOLATION GATE VALVE FOR ALL LIFT STATIONS THAT RE-PUMP SEWAGE FROM OTHER LIFT STATIONS.
3. #5 REBAR (6 TYP.) SHALL BE EPOXY EMBEDDED INTO THE WET WELL TOP 3-4 INCHES DEEP AND CAST 3-4 FEET INTO THE VALVE ASSEMBLY PAD TO ENSURE THE TOPS OF THE WET WELL AND VALVE ASSEMBLY PAD WILL REMAIN FLUSH.
4. QUICK COUPLE SHALL BE PLACED ON THE SIDE CLOSEST TO THE LIFT STATION DRIVEWAY.
5. POLYMER CONCRETE W/ 9,000 PSI COMPRESSIVE STRENGTH SHALL BE USED IN THE WET WELL CONSTRUCTION. STANDARD PORTLAND CONCRETE MAY BE USED FOR THE VALVE ASSEMBLY PAD, 3,000 PSI 28-DAY COMPRESSIVE STRENGTH.

FOR SECTION X-X SEE SEWAGE LIFT STATION, SECTION VIEW ON DETAIL US-28.

MANATEE COUNTY PUBLIC WORKS DEPARTMENT			SEWAGE LIFT STATION PLAN VIEW	US-26
REV.BY	DATE	DATE OF APPROVAL		
JSS	6/22			

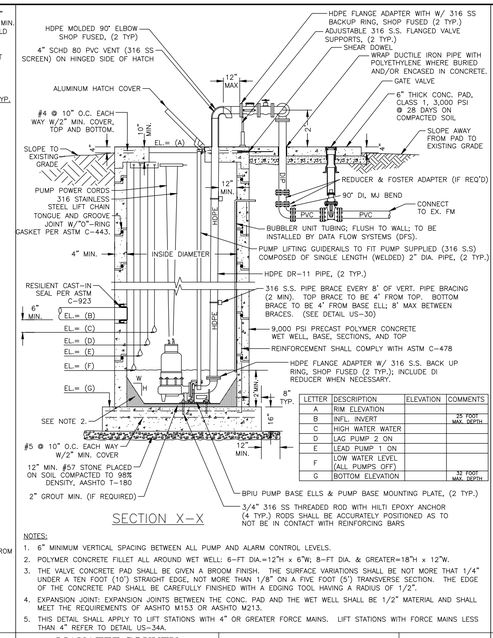

LETTER	DESCRIPTION	ELEVATION	COMMENTS
A	RIM ELEVATION		
B	INFL. INVERT		25 FOOT MAX. DEPTH
C	HIGH WATER WATER		
D	LAG PUMP 2 ON		
E	LEAD PUMP 1 ON		
F	LOW WATER LEVEL (ALL PUMPS OFF)		
G	BOTTOM ELEVATION		32 FOOT MAX. DEPTH

SECTION X-X

NOTES:

1. 6" MINIMUM VERTICAL SPACING BETWEEN ALL PUMP AND ALARM CONTROL LEVELS.
2. POLYMER CONCRETE FILLET ALL AROUND WET WELL: 6-FT DIA.=12"H x 6"W; 8-FT DIA. & GREATER=18"H x 12"W.
3. THE VALVE CONCRETE PAD SHALL BE GIVEN A BROOM FINISH. THE SURFACE VARIATIONS SHALL BE NOT MORE THAT 1/4" UNDER A TEN FOOT (10') STRAIGHT EDGE, NOT MORE THAN 1/8" ON A FIVE FOOT (5') TRANSVERSE SECTION. THE EDGE OF THE CONCRETE PAD SHALL BE CAREFULLY FINISHED WITH A EDGING TOOL HAVING A RADIUS OF 1/2".
4. EXPANSION JOINT: EXPANSION JOINTS BETWEEN THE CONC. PAD AND THE WET WELL SHALL BE 1/2" MATERIAL AND SHALL MEET THE REQUIREMENTS OF AASHTO M153 OR AASHTO M213.
5. THIS DETAIL SHALL APPLY TO LIFT STATIONS WITH 4" OR GREATER FORCE MAINS. LIFT STATIONS WITH FORCE MAINS LESS THAN 4" REFER TO DETAIL US-34A.

MANATEE COUNTY PUBLIC WORKS DEPARTMENT			SEWAGE LIFT STATION SECTION VIEW	US-28
REV.BY	DATE	DATE OF APPROVAL		
JSS	6/22			

GENERAL LIFT STATION NOTES:

1. ALL ACCESS COVERS SHALL BE ALUMINUM, WITH 316 STAINLESS STEEL HARDWARE AND RATED FOR 300 P.S.F. LOADING. ALL ALUMINUM SURFACES IN CONTACT WITH CONCRETE SHALL HAVE 2 COATS BITUMASTIC EPOXY, TOTAL 16 MILS DFT. ALL ACCESS COVERS SHALL BE EQUIPPED WITH A LOCKING STAPLE OR BAR FOR USE WITH A PADLOCK. PADLOCKS FOR WETWELL, FENCE GATE AND CONTROL PANELS OF PUBLICLY OWNED & MAINTAINED LIFT STATIONS SHALL BE FURNISHED BY THE MANATEE COUNTY UTILITIES DEPARTMENT, UPON ACCEPTANCE.
2. INSTALL WET WELL VENT ON THE HINGED SIDE OF THE WET WELL HATCH COVER, BETWEEN DISCHARGE PIPING AND MATCH HEIGHT.
3. GROUND SHALL BE SLOPED AWAY FROM SLAB TO NATURAL GROUND ELEVATION IN ALL DIRECTIONS. A 4-INCH REVEAL SHALL BE PROVIDED AROUND THE STRUCTURES. SITE SHALL INCLUDE A WEED BARRIER FABRIC THAT IS COVERED WITH WASHED SHELL OR ROCK WITHIN LIFT STATION FENCING; SITE SHALL INCLUDE A WEED BARRIER FABRIC THAT IS COVERED WITH SHREDDED WOOD TYPE MULCH UNDER THE SHRUBS AND UP TO OUTSIDE OF THE FENCE. WEED BARRIER FABRIC THAT IS COVERED WITH SHREDDED WOOD-TYPE MULCH SHALL BE LOCATED UNDER THE TREES FOR A MINIMUM DISTANCE OF 3 FEET FROM THE TREE. SODDING OR SHREDDED WOOD-TYPE MULCH SHALL BE INSTALLED ON THE REMAINDER OF THE SITE TO THE EDGE OF THE EASEMENT.
4. ALL FORCE MAIN PIPING AND FITTINGS FROM THE PUMP BASE ELBOW IN THE WETWELL UP TO THE CHECK VALVE IN THE ABOVE GROUND VALVE ASSEMBLY, SHALL BE DR11 HDPE. THE HDPE FITTINGS SHALL BE MOLDED FITTINGS. ALL CONNECTIONS TO IRON BODIED FLANGE FITTINGS IN THE WETWELL (PUMP BASE ELLS) AND TO THE CHECK VALVES SHALL BE MADE USING HDPE FLANGE ADAPTERS WITH 316 STAINLESS STEEL BACKUP RINGS. ALL HDPE CONNECTIONS SHALL BE THERMAL FUSED. ALL PIPING DOWNSTREAM OF THE VALVE ASSEMBLY TO THE FIRST BURIED FITTING SHALL BE DUCTILE IRON PIPE (CL-53), THEN PVC (DR18).
5. ALL PIPING BELOW GROUND SHALL BE COLOR CODED IN ACCORDANCE WITH THESE STANDARDS. GREEN-RAW SEWAGE; PURPLE-RECLAIMED; BLUE-POTABLE WATER.
6. ANCHORS & LIFTING DEVICES SHALL NOT PENETRATE THE WALLS OF THE WET WELL.
7. ALL TOP, SECTIONS, AND BASE SHALL BE PRECAST POLYMER CONCRETE, MIN. 9,000 PSI COMPRESSIVE STRENGTH. SEE PRECAST POLYMER CONCRETE SANITARY SEWER MANHOLE FOR TURBULENT FLOW DETAIL.
8. ALL ABOVE-GROUND METAL APPURTENANCES INCLUDING BOLTS, NUTS AND WASHERS SHALL BE 316 STAINLESS STEEL. ALL STAINLESS STEEL BOLTS SHALL BE TREATED WITH NEVER-SEIZE PRIOR TO ASSEMBLY. ALL FLANGED CONNECTIONS SHALL REQUIRE FLAT 316 STAINLESS STEEL WASHERS ON BOTH SIDES TO PROTECT COATINGS.
9. VERTICAL HDPE PUMP DISCHARGE PIPE IN THE WET WELL SHALL BE BRACED PER DETAIL US-21. THE PIPE SHALL BE CLAMPED TO A SINGLE LENGTH OF 2" 316 SS TUBING (OR 2" 316 SS ANGLE) INSTALLED HORIZONTALLY. THE TUBE SHALL HAVE 6"x6"x¼" PLATES WELDED TO EACH END AND ATTACH TO THE WALL BY 316 SS ANCHORS. THE PIPE SHALL BE CLAMPED TO THE TUBING WITH 316 SS 3/8" DIA. U-BOLTS.
10. CONTRACTOR SHALL TAKE ALL NECESSARY PRECAUTIONS TO PREVENT FLOTATION.
11. TOP OF WET WELL AND VALVE ASSEMBLY SLAB SHALL BE AT THE SAME ELEVATION.
12. THE EXTERIOR SURFACES OF THE CONCRETE WET WELL AND VALVE ASSEMBLY PAD EXPOSED ABOVE GRADE SHALL BE COATED WITH A LEAST TWO COATS OF H&C SILICONE ACRYLIC CONCRETE STAIN, PATIO GREEN, MANUFACTURED BY FLR PAINTS, INC. ABOVE GROUND VALVE ASSEMBLY & PIPING SHALL BE PAINTED, RUSTOLEUM 7579 HUNTER GREEN. CONTRACTOR SHALL TAKE PRECAUTIONS TO AVOID OVER-SPRAY ONTO THE VALVE ASSEMBLY CONCRETE PAD.
13. SATELLITE LIFT STATIONS SHALL HAVE A 2" WATER SERVICE LINE, A 5/8-INCH WATER METER, AND A 3/4-INCH REDUCED PRESSURE (RPZ) BACKFLOW PREVENTION ASSEMBLY, AND A SEPARATE POST MOUNTED HOSE BIBB. STATIONS WITH WET WELL DIAMETERS 10 FEET AND LARGER SHALL HAVE A 2-INCH METER AND RPZ BACKFLOW PREVENTION ASSEMBLY, AND AN ADDITIONAL 2" ALUMINUM QUICK CONNECT HOSE CONNECTION, SEE DETAIL US-22. ALL ITEMS SHALL BE FIELD LOCATED WITH COUNTY PERSONNEL.
14. LANDSCAPING SHALL BE IRRIGATED WITH NON-POTABLE WATER. A RAIN SENSOR SHALL BE FURNISHED AND INSTALLED.
15. HOSE BIB TO BE A MINIMUM OF 6 FEET FROM THE ELECTRICAL CONTROL PANEL, 24" ABOVE THE SURROUNDING FINISH GRADE, AND ANCHORED TO A 4" PVC CONCRETE FILLED PIPE. EXACT LOCATION TO BE DETERMINED IN THE FIELD W/COUNTY PERSONNEL.
16. WATER METER ASSEMBLY TO BE INSTALLED BY CONTRACTOR AS PART OF WATER SERVICE CONNECTION WITH FEES PAID BY THE DEVELOPER.
17. BASE AND FIRST WALL SECTION OF WET WELL SHALL BE MONOLITHIC.
18. EVERY EFFORT SHALL BE MADE BY THE CONTRACTOR TO CONSTRUCT WATERTIGHT STRUCTURES WITH NO VISIBLE LEAKS. COMPLETED STRUCTURES THAT ARE NOT WATERTIGHT AND/OR DO NOT MEET THE REQUIREMENTS OF ASTM C-443 WILL BE REJECTED.
19. FLEXIBLE GASKET CONNECTORS SHALL MEET THE REQUIREMENTS OF ASTM C-923 LATEST REVISION.
20. ALL GATE VALVES SHALL BE RESILIENT SEAT NON-RISING STEM TYPE IN ACCORDANCE WITH THESE STANDARDS.
21. ELECTRICAL SERVICE SHALL BE 3 PHASE MINIMUM, UNLESS THE ELECTRICAL UTILITY PROVIDES CORRESPONDENCE STATING THAT 3 PHASE SERVICE IS UNAVAILABLE.
22. ELECTRICAL CONDUIT SHALL BE RUN BY THE SHORTEST ROUTE POSSIBLE FROM THE ELECTRICAL SOURCE TO THE CONTROL PANEL AND FROM THE CONTROL PANEL TO THE LIFT STATION WET WELL.
23. A FLOW METER AND DIESEL EMERGENCY BACKUP GENERATOR SHALL BE REQUIRED FOR ALL LIFT STATIONS THAT MEET THE CRITERIA LISTED IN SECTION 1.14.14 OF THE PUBLIC WORKS UTILITY STANDARDS MANUAL.
24. THE CONTROL PANEL, HOSE BIB, EMERGENCY BACKUP GENERATOR, FUEL STORAGE TANK AND ANTENNA SHALL NOT BE LOCATED BETWEEN THE WET WELL, VALVE ASSEMBLY AND THE DRIVEWAY. THE PUMP SHALL NOT BE LOCATED WITHIN 25 FEET OF THE EDGE OF THE LIFT STATION EASEMENT AT THE ROW LINE.
25. THE ANTENNA FOR THE RADIO TELEMETRY UNIT REQUIRES DIRECT LINE-OF-SIGHT SIGNALING CAPABILITY TO THE UTILITIES DEPARTMENT'S OFFICE THAT WILL RECEIVE THE SIGNAL. THERE SHALL BE AN UNOBSTRUCTED HORIZONTAL ANGLE OF FIFTEEN (15) DEGREES FROM THE ANTENNA MAST (7.5 DEGREES ON BOTH SIDES OF THE DIRECT LINE-OF-SIGHT AZIMUTH). NO TREE SHALL BE PLANTED WITHIN THE DESIGNATED UNOBSTRUCTED ANGLE FOR A TWENTY (20) FEET HORIZONTAL DISTANCE MEASURED FROM THE MAST. LANDSCAPE BUFFER PLANTINGS ARE TO BE FIELD ADJUSTED IN COORDINATION WITH THE LOCATION OF THE CONSTRUCTED TELEMETRY ANTENNA. THE ANTENNA TOWER/MAST SHALL BE TO THE LEFT OF THE CONTROL PANEL.

MANATEE COUNTY PUBLIC WORKS DEPARTMENT			LIFT STATION NOTES	US-29
REV.BY	DATE	DATE OF APPROVAL		

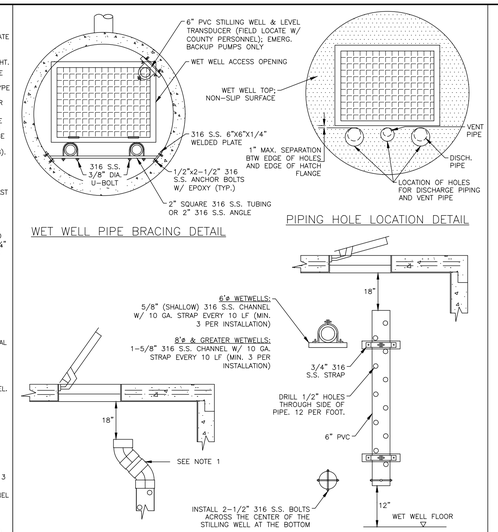

NOTES:

1. FOR LARGER LIFT STATIONS, PROVISIONS SHALL BE MADE TO MAKE THE TOP OF THE STILLING WELL VISIBLE AND ACCESSIBLE FROM THE HATCH OPENING, I.E. 45° FITTINGS, ETC.
2. NYLON LOCK NUTS SHALL NOT BE USED ON WEDGE ANCHORS.

MANATEE COUNTY PUBLIC WORKS DEPARTMENT			LIFT STATION PIPE BRACING, & STILLING WELL DETAILS	US-30
REV.BY	DATE	DATE OF APPROVAL		
JSS	6/22			

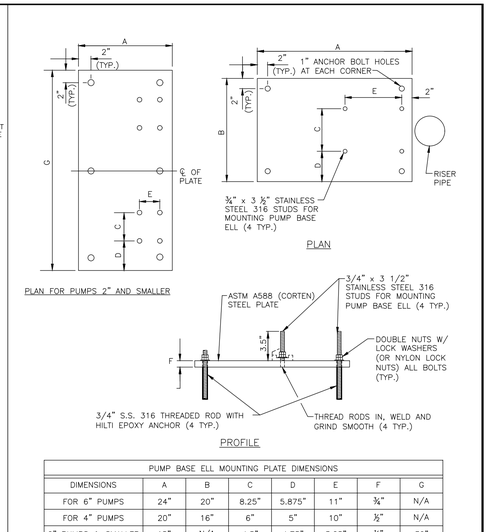

PUMP BASE ELL MOUNTING PLATE DIMENSIONS							
DIMENSIONS	A	B	C	D	E	F	G
FOR 6" PUMPS	24"	20"	8.25"	5.875"	11"	¾"	N/A
FOR 4" PUMPS	20"	16"	6"	5"	10"	½"	N/A
2" PUMPS & SMALLER	15"	N/A	4.5"	4.75"	3.25"	½"	32"

NOTES:

1. INSTALL DOUBLE NUTS (OR NYLON LOCK NUTS) ON ALL EIGHT (8) THREADED RODS.
2. THE PLATE EDGES AND ALL HOLES SHALL BE GROUND SMOOTH TO REMOVE ALL BURRS.
3. DIMENSIONS "C" & "E" ARE FOR BARNEY'S PUMPS, INC. BASE ELLS.
4. FOR PUMPS WITH A 2-INCH DISCHARGE OR LESS, A SINGLE BASE PLATE SHALL BE INSTALLED UNDER BOTH GRINDER PUMPS.

MANATEE COUNTY PUBLIC WORKS DEPARTMENT			PUMP BASE ELL MOUNTING PLATE	US-31
REV.BY	DATE	DATE OF APPROVAL		

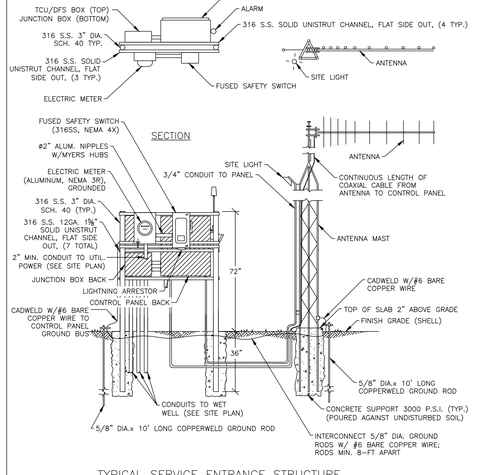

TYPICAL SERVICE ENTRANCE STRUCTURE

NOTES

1. ALL EQUIPMENT FURNISHED FOR THE LIFT STATION SHALL CONFORM TO MANATEE COUNTY PUBLIC WORKS UTILITY STANDARDS.
2. POWER TO BE SUPPLIED AS DIRECTED, THE CONTRACTOR SHALL BE RESPONSIBLE FOR ALL COSTS ASSOCIATED WITH PROVIDING TEMPORARY AND PERMANENT ELECTRICAL SERVICE.
3. STAINLESS STEEL CONTROL PANEL SUPPORT POSTS SHALL BE TREATED WITH TWO COATS OF BITUMINOUS EPOXY TO 16 MILS WHERE EMBEDDED IN CONCRETE.
4. CONTROL AND FLOW METER ENCLOSURE TO BE NEMA 3R/12 304 STAINLESS STEEL WITH RAIN SHIELD. DISCONNECT ENCLOSURE TO BE NEMA 4X 304 STAINLESS. STEEL.
5. ALL P.V.C. CONDUIT SHALL BE SCHEDULE 80.
6. ANTENNA MAST SHALL BE RATED FOR 150 MPH WINDS.
7. IF ANTENNA MAST IS MORE THAN 18" FROM PANEL, RUN CONDUIT FOR SITE LIGHT UNDERGROUND.
8. DISCONNECT MUST HAVE PROPERLY ENGINEERED ARC FLASH LABEL PER IEEE 1582 / NFPA 70E.

MANATEE COUNTY PUBLIC WORKS DEPARTMENT			SEWAGE LIFT STATION METER & ELECTRICAL DETAILS	US-32
REV.BY	DATE	DATE OF APPROVAL		
JSS	6/22			

NOTES

1. TYPICAL CONTROL PANEL SHALL BE 30"X36". CONTROL PANEL DIMENSIONS MAY INCREASE WITH L.S. PUMPS GREATER THAN 20 H.P. 230V PANEL ILLUSTRATED, (30" WIDE)
2. ALL HARDWARE SHALL BE 316 STAINLESS STEEL.
3. PUMP CONTROL PANEL AND JUNCTION BOX ARE TO BE POWDER COATED WHITE.
4. REFER TO SECTION 1.14.3.E IN THE MCPW UTILITY STANDARDS MANUAL FOR THE APPROPRIATE BARNEYS PUMP PART# FOR ORDERING THE CORRECT SIZE CONTROL PANEL EQUIPMENT.
5. CONTROL PANEL MUST HAVE PROPERLY ENGINEERED ARC FLASH LABEL PER IEEE 1582 / NFPA 70E.

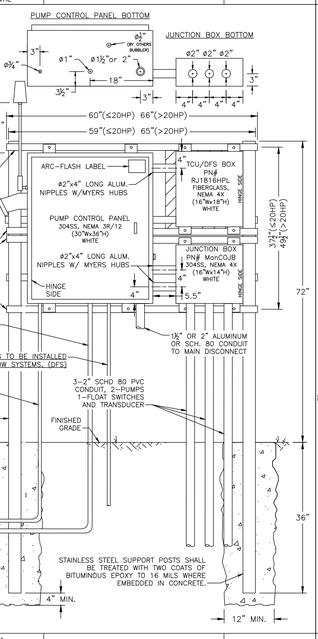

MANATEE COUNTY PUBLIC WORKS DEPARTMENT			SEWAGE LIFT STATION CONTROL PANEL	US-33
REV.BY	DATE	DATE OF APPROVAL		
JSS	6/22			

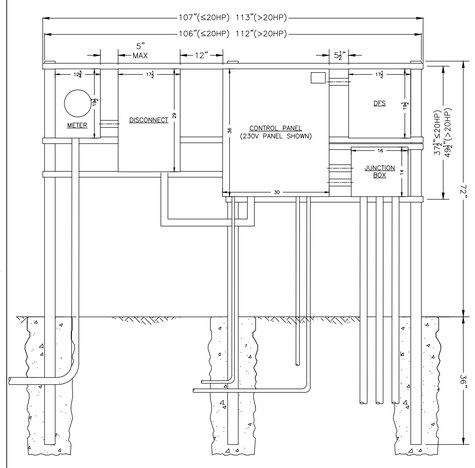

NOTES

1. THIS DETAIL IS ONLY TO SHOW THE GENERAL LAYOUT OF THE CONTROL EQUIPMENT. REFER TO DETAILS US-32 & US-33 FOR FURTHER DETAIL INFORMATION.
2. A REMOTE EMERGENCY GENERATOR RECEPTACLE SHALL BE REQUIRED WHEN USING A ONE-SIDED LAYOUT. REFER TO DETAIL US-RGR.

MANATEE COUNTY PUBLIC WORKS DEPARTMENT			SEWAGE PUMP STATION CONTROL PANEL (ONE-SIDED LAYOUT)	US-OSL
REV.BY	DATE	DATE OF APPROVAL		

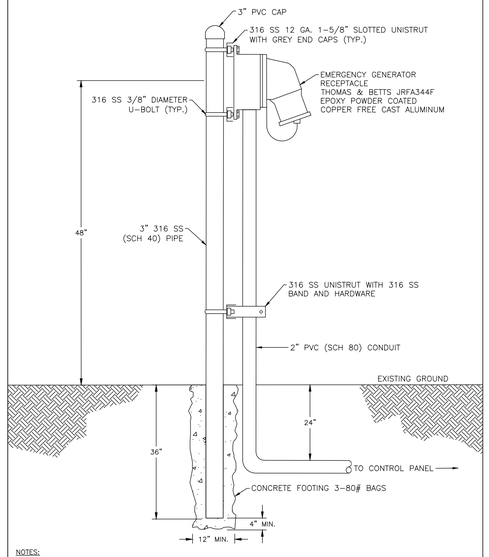

NOTES:

1. ALL MATERIALS SHALL CONFORM TO MANATEE COUNTY STANDARDS. REFER TO DETAILS US-29 AND US-33 FOR FURTHER DETAILS.
2. REMOTE GENERATOR RECEPTACLE SHALL BE USED IN CONJUNCTION WITH THE ONE-SIDED CONTROL PANEL LAYOUT, REFER TO DETAIL US-OSL.
3. THE LOCATION AND ORIENTATION OF THE REMOTE GENERATOR RECEPTACLE SHALL BE DETERMINED IN THE FIELD WITH COUNTY PERSONNEL.

MANATEE COUNTY PUBLIC WORKS DEPARTMENT			REMOTE EMERGENCY GENERATOR RECEPTACLE	US-RGR
REV.BY	DATE	DATE OF APPROVAL		

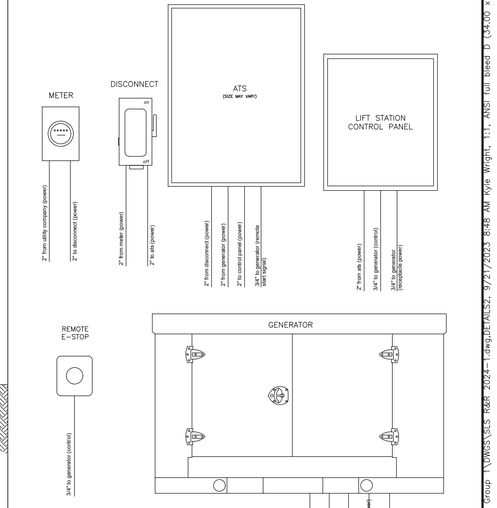

NOTES:

1. THIS DETAIL IS FOR THE GENERAL INFORMATION ON THE CONDUIT SIZING AND GENERAL COMPONENTS INVOLVED IN THE GENERATOR WIRING.
2. POWER CONDUIT SIZES MAY VARY DEPENDING ON OVER-CURRENT PROTECTIVE DEVICE, ALWAYS FOLLOW NEC REQUIREMENTS AND APPROVE SIZES WITH COUNTY REPRESENTATIVE.
3. FOR CONDUIT MATERIAL, REFER TO DETAILS US-32 AND US-33.

MANATEE COUNTY PUBLIC WORKS DEPARTMENT			GENERATOR WIRING AND CONDUIT ROUTING SCHEMATIC FOR LIFT STATIONS	US-CRS
REV.BY	DATE	DATE OF APPROVAL		

NO.	REVISION DESCRIPTION	BY	DATE

Know what's below
Call before you dig

SATELLITE LIFT STATION R&R

2024 GROUP 1

DETAILS2

PUBLIC WORKS DEPARTMENT
ENGINEERING SERVICES
1022 26th Avenue East, Bradenton, FL 34208

PROJECT #	402-0019707 / 5001301	
SURVEY #	NA	
SEC./TWN./RGE	VARIES	
SCALE	N.T.S	
	BY	DATE
SURVEYED	NA	NA
DESIGNED	JSS	5/2023
DRAWN	JKW	5/2023
CHECKED	JSS	–

J. SHEA SHOUN, P.E.
FLORIDA REG. No. 60923
JOHN S. SHOUN LICENSE No. 60923 STATE OF FLORIDA PROFESSIONAL ENGINEER
09/21/2023
Signature Date

SHEET 09 OF 11

PLOT Eng Design(PROJ)-SAN SWR Projects SLS R&R 2024 Group 1(DWGS)SLS R&R 2024-1.dwg,pcFALS2, 9/21/2023 8:48 AM Kyle Wright, 1:1, ANSI full bleed D (34.00 x 22.00 inches), MC-2018.STB

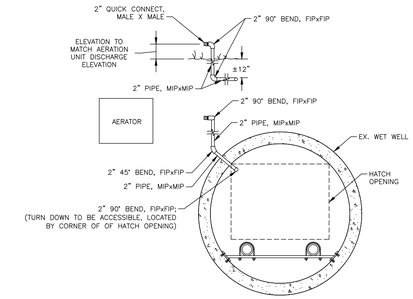

PLAN

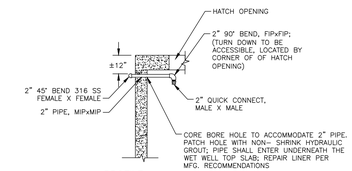

PROFILE

ITEMS (ALL 316 STAINLESS STEEL)

–2" PIPE, MIPxMIP	±20 LF
–2" QUICK CONNECTION MALE TO MALE	2 EA
–2" 90° BENDS, FIPxFIP	3 EA
–2" 45° BEND, FIPxFIP	1 EA

NOTES:

1. THE INSTALLATION OF THE 2" AERATION PIPING SHALL BE FIELD LOCATED W/ COUNTY PERSONNEL.
2. THIS DETAIL REPRESENTS THE CONCEPTUAL DESIGN AND INSTALLATION OF AERATION PIPING. ALL LENGTHS & FITTINGS SHALL BE FIELD ADJUSTED, BASED ON SITE SPECIFIC CONSTRAINTS.

AERATION PIPING DETAIL

N.T.S.

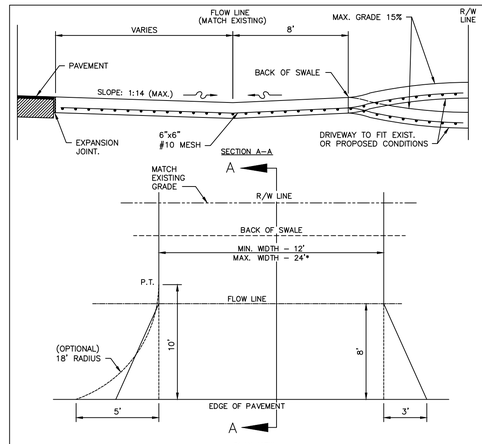

PLAN VIEW

* FOR DRIVEWAYS THAT CAN DEMONSTRATE THE NEED FOR ADDITIONAL WIDTH, THE WIDTH MAY NOT BE GREATER THAN THE LESSER OF:

A) 30' TOTAL AT THE RIGHT-OF-WAY LINE.
B) 30% OF THE FRONT FOOTAGE AS DEFINED ON THE SURVEY (OR FIELD MEASUREMENTS, 36' MAX).

NOTES:

A. DRIVEWAYS ADJACENT TO A PAVED ROADWAY MUST HAVE THE APRON CONSTRUCTED.

B. DRIVEWAY SHALL BE 6" REINFORCED CONCRETE (3,000 PSI AT 28 DAYS) WITH 6"x6" #10 MESH FROM EDGE OF PAVEMENT TO THE RIGHT-OF WAY-LINE.

C. EXISTING DRAINAGE FLOWLINE TO BE MAINTAINED. PIPING MAY BE REQUIRED AT THE COUNTY'S DISCRETION. DEPARTMENT DIRECTOR OR DESIGNEE MAY APPROVE THE USE OF A SWALE DRIVE, IF ON-SITE CONDITIONS ARE FAVORABLE.

D. USE 3'x8' FLARED APRON OR 18' RADIUS, BOTH ARE MINIMUMS.

E. EXPANSION JOINT SHALL BE 1/2" PREFORMED JOINT FILLER OR APPROVED ALTERNATE.

F. SAWCUT (1/4" THICKNESS MINIMUM) ON 10' CENTERS. IF DRIVE IS WIDER THAN 12', ADD JOINTS AT 10' CENTERS.

MANATEE COUNTY PUBLIC WORKS DEPARTMENT			RURAL RESIDENTIAL SWALE DRIVES	101.1
REV.BY	DATE	4/26/22 DATE OF B.O.C.C. APPROVAL		

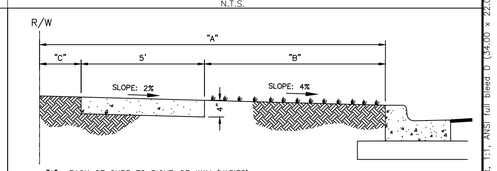

"A"= BACK OF CURB TO RIGHT-OF-WAY (VARIES)
"B"= UNPAVED AREA (VARIES)
"C"= VARIES, SEE DETAILS 401.1–401.10

TYPICAL SIDEWALK LOCATION

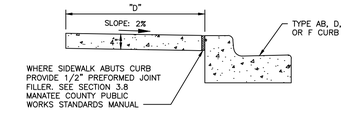

"D"= SIDEWALK WIDTH SHALL BE 6' STANDARD, WHERE SIDEWALK ABUTS TYPE AB, D, OR F CURB.

SEE SECTION 3.8 SIDEWALKS, MANATEE COUNTY PUBLIC WORKS STANDARDS MANUAL, FOR FURTHER INFORMATION.

ALTERNATE SIDEWALK LOCATION

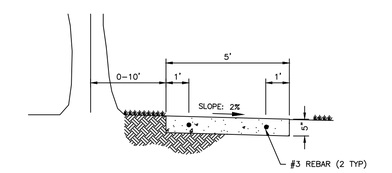

SIDEWALK LOCATION CLOSE TO TREES

MANATEE COUNTY PUBLIC WORKS DEPARTMENT			SIDEWALK REQUIREMENTS	301.0
REV.BY	DATE	4/26/22 DATE OF B.O.C.C. APPROVAL		

NO.	REVISION DESCRIPTION	BY	DATE

811 Know what's below Call before you dig

SATELLITE LIFT STATION R&R

2024 GROUP 1

DETAILS3

Manatee County FLORIDA

PUBLIC WORKS DEPARTMENT
ENGINEERING SERVICES
1022 26th Avenue East, Bradenton, FL 34208

PROJECT #	402-0019707 / 5001301	
SURVEY #	NA	
SEC./TWN./RGE	VARIES	
SCALE	N.T.S	
	BY	DATE
SURVEYED	NA	NA
DESIGNED	JSS	5/2023
DRAWN	JKW	5/2023
CHECKED	JSS	–

J. SHEA SHOUN, P.E.

FLORIDA LICENSE No. 60923
JOHN S. SHOUN
STATE OF FLORIDA
PROFESSIONAL ENGINEER
09/21/2023
Signature Date

SHEET 10 OF 11

H:\Utl\Eng Design\MWS\Projects\SLS R&R 2024 Group 1\DWGS\SLS R&R 2024-1 Dwg\DETAILS3, 9/21/2023 8:48 AM Kyle Wright, 1:1, ANSI Full Bleed D (34.00 x 22.00 Inches), MC-2016.STB

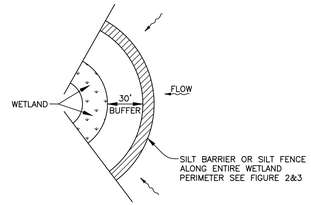

WETLAND BUFFER
FIGURE 1

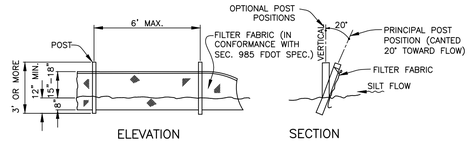

NOTE: SILT FENCE TO BE PAID FOR UNDER THE CONTRACT UNIT PRICE FOR STAKED SILT FENCE (LF).

TYPICAL SILT FENCE
FIGURE 2

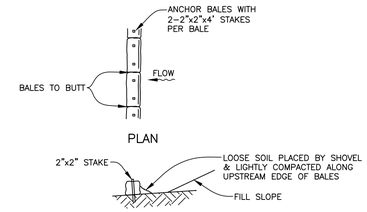

TYPICAL BALE SILT BARRIER
FIGURE 3

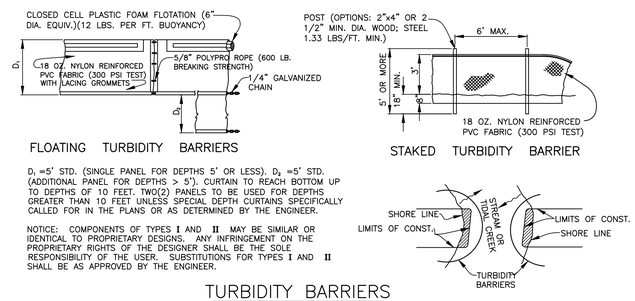

D_1 =5' STD. (SINGLE PANEL FOR DEPTHS 5' OR LESS). D_2 =5' STD. (ADDITIONAL PANEL FOR DEPTHS > 5'). CURTAIN TO REACH BOTTOM UP TO DEPTHS OF 10 FEET. TWO(2) PANELS TO BE USED FOR DEPTHS GREATER THAN 10 FEET UNLESS SPECIAL DEPTH CURTAINS SPECIFICALLY CALLED FOR IN THE PLANS OR AS DETERMINED BY THE ENGINEER.

NOTICE: COMPONENTS OF TYPES **I** AND **II** MAY BE SIMILAR OR IDENTICAL TO PROPRIETARY DESIGNS. ANY INFRINGEMENT ON THE PROPRIETARY RIGHTS OF THE DESIGNER SHALL BE THE SOLE RESPONSIBILITY OF THE USER. SUBSTITUTIONS FOR TYPES **I** AND **II** SHALL BE AS APPROVED BY THE ENGINEER.

TURBIDITY BARRIERS
FIGURE 4

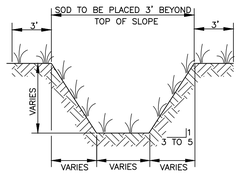

TYPICAL SWALE SECTION
FIGURE 5

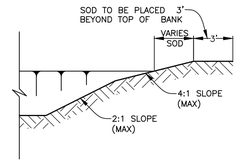

TYPICAL RETENTION/DETENTION POND SECTION
FIGURE 6

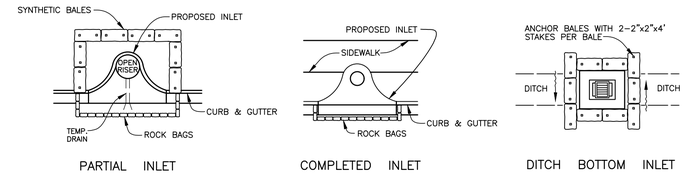

SYNTHETIC BALE PROTECTION AROUND INLETS OR SIMILAR STRUCTURES
FIGURE 7

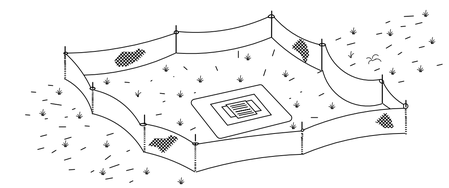

TYPE **III** SILT FENCE PROTECTION AROUND DITCH BOTTOM INLETS

STAKED SILT BARRIER OR SILT FENCE PROTECTION AROUND DITCH BOTTOM INLETS
FIGURE 8

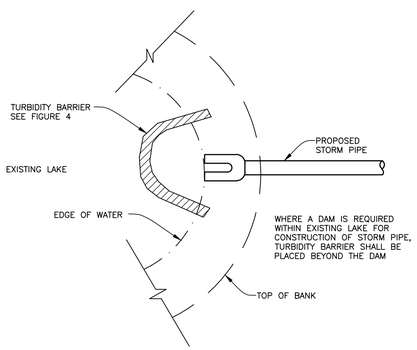

TURBIDITY BARRIER AT CONNECTION OF STORM PIPE TO EXISTING LAKE
FIGURE 9

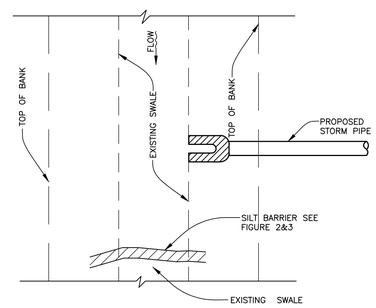

SILT BARRIER AT CONNECTION OF STORM PIPE TO EXISTING SWALE
FIGURE 10

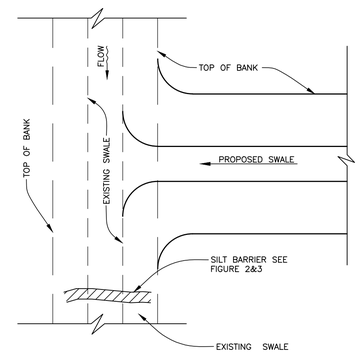

SILT BARRIER AT CONNECTION OF SWALE TO EXISTING SWALE
FIGURE 11

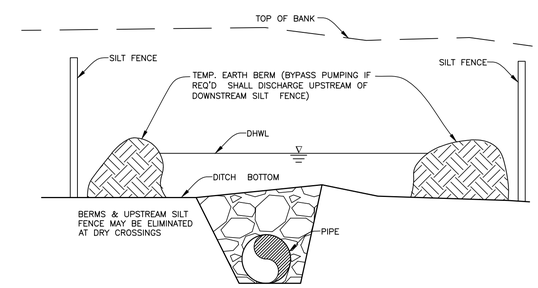

UNDERGROUND PIPE CROSSING
FIGURE 12

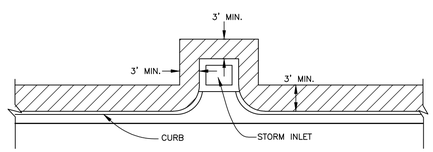

SOD ALONG CURB AND AROUND INLET
FIGURE 14

NOTE:
REFERENCE THE STATE OF FLORIDA EROSION AND SEDIMENT CONTROL DESIGNER AND REVIEWER MANUAL, LATEST EDITION, FOR ALL TEMPORARY EROSION CONTROL MEASURES

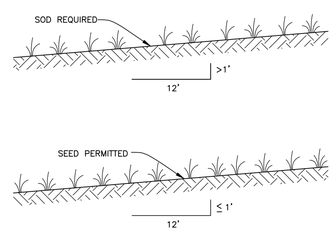

GRASS SLOPES
FIGURE 13

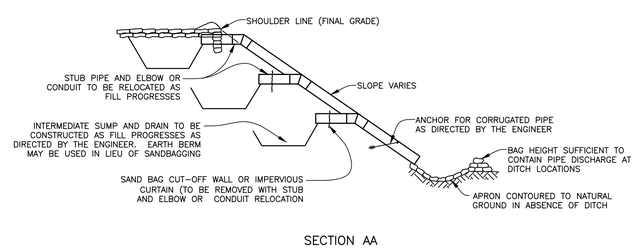

SECTION AA

TEMPORARY SLOPE DRAIN
FIGURE 15

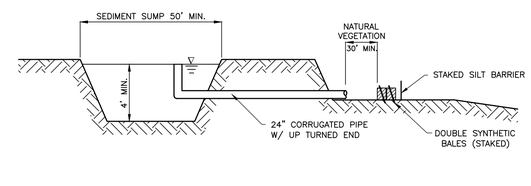

SEDIMENT SUMP SECTION
FIGURE 16

NO.	REVISION DESCRIPTION	BY	DATE

811 Know what's below Call before you dig

SATELLITE LIFT STATION R&R
2024 GROUP 1
EROSION CONTROL DETAILS

Manatee County FLORIDA
PUBLIC WORKS DEPARTMENT
ENGINEERING SERVICES
1022 26th Avenue East, Bradenton, FL 34208

PROJECT #	402-0019707 / 5001301	
SURVEY #	NA	
SEC./TWN./RGE	VARIES	
SCALE	N.T.S	
	BY	DATE
SURVEYED	NA	NA
DESIGNED	JSS	5/2023
DRAWN	JKW	5/2023
CHECKED	JSS	–

J. SHEA SHOUN, P.E.
FLORIDA LICENSE No. 60923
JOHN B. SHOUN
STATE OF FLORIDA
PROFESSIONAL ENGINEER
09/21/2023
Signature Date

SHEET 11 OF 11

R:\Util Eng Design\PROJ\SAN SWR Proj\San Swr - LS Upgrades\LS R&R 2024 Group 1\DWGS\LS R&R 2024-1.dwg;Fc: 9/21/2023 8:48 AM Kyle Wright, 1:1, ANSI full bleed D (34.00 x 22.00 inches), MC-2016.51B