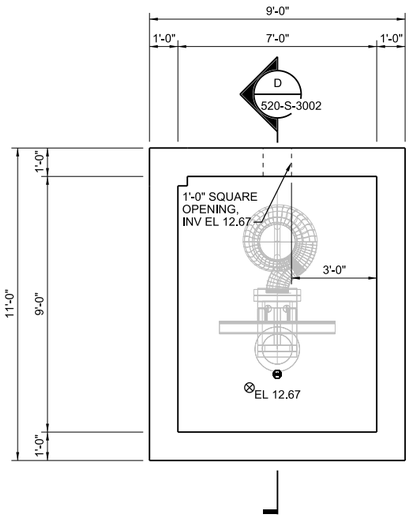

LOWER PLAN

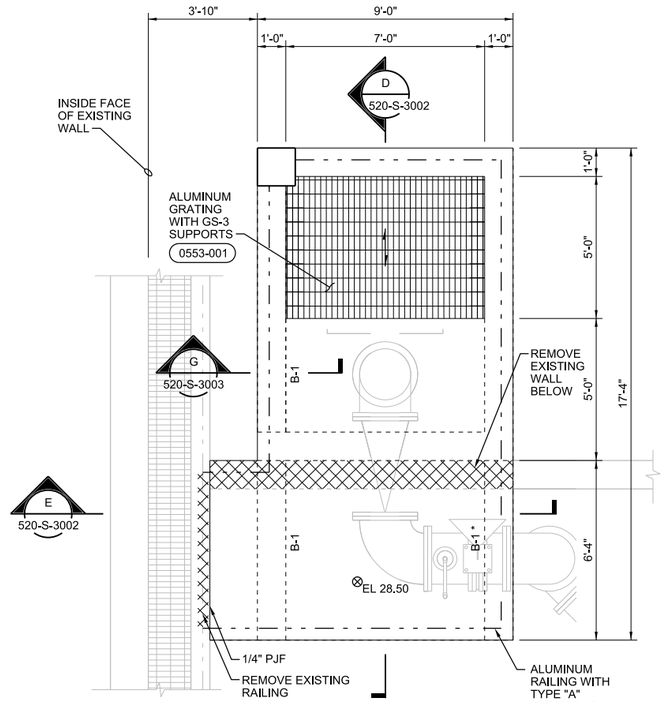

UPPER PLAN

WET WELL 1

3/8"=1'-0"

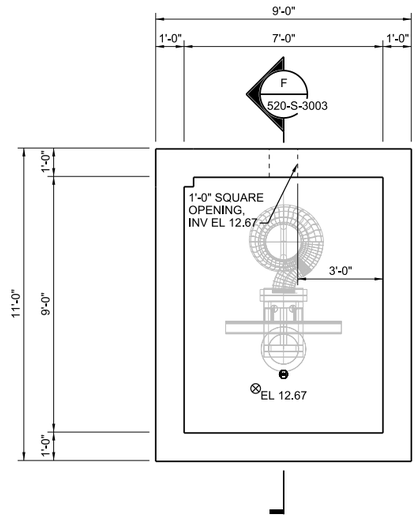

LOWER PLAN

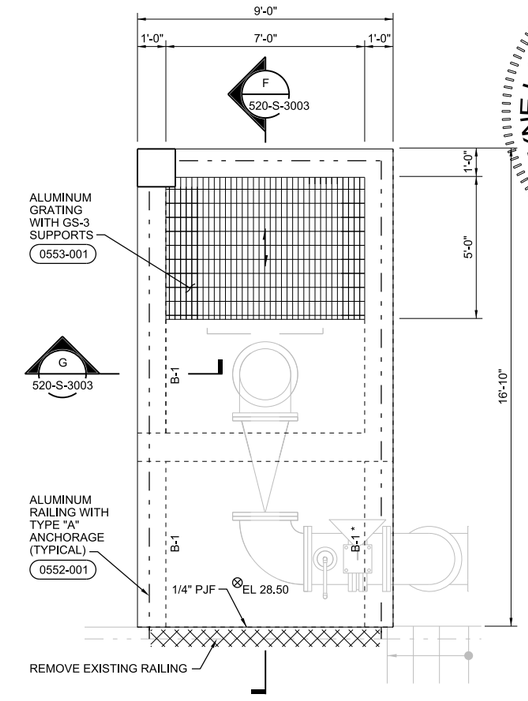

UPPER PLAN

WET WELL 2

3/8"=1'-0"

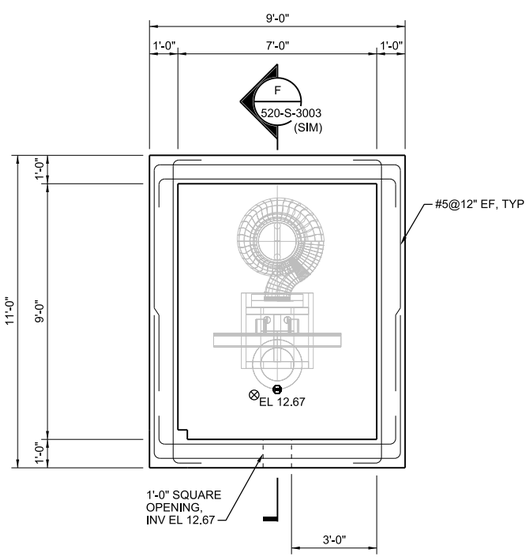

LOWER PLAN

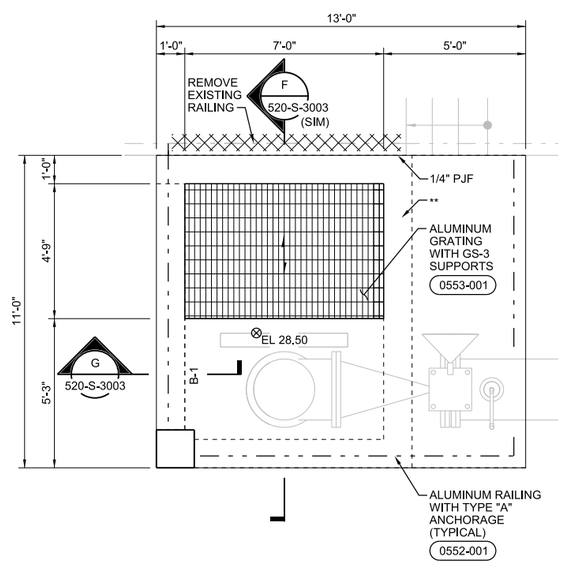

UPPER PLAN

WET WELL 3

3/8"=1'-0"

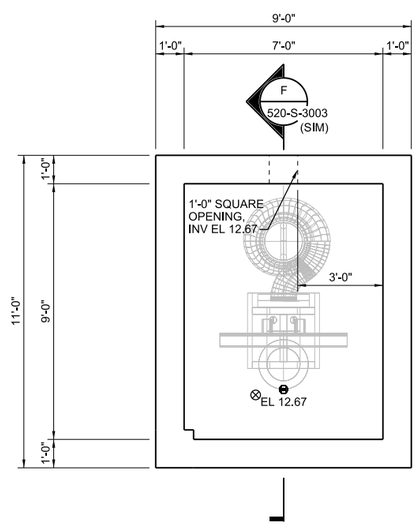

LOWER PLAN

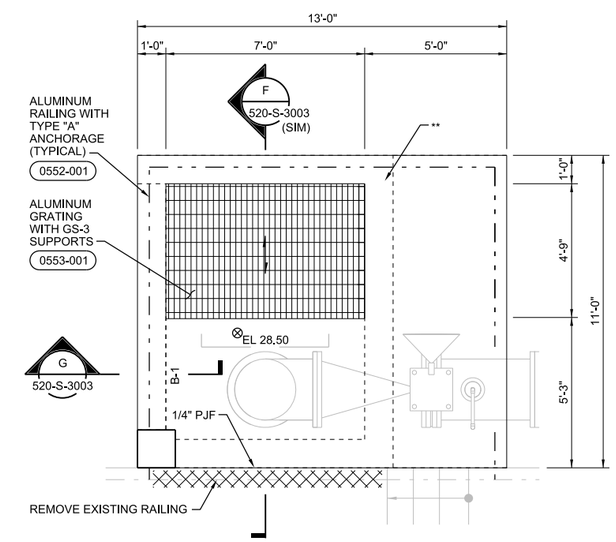

UPPER PLAN

WET WELL 4

3/8"=1'-0"

DELAYNE LANGE LICENSE No 70194 STATE OF FLORIDA PROFESSIONAL ENGINEER

NO.	DATE	REVISION	BY	APVD

DSGN D LANGE | DR B BARBER | CHK M CHRZANOWSKI | APVD D LANGE

©CH2M HILL 2012. ALL RIGHTS RESERVED.

REUSE OF DOCUMENTS: THIS DOCUMENT, AND THE IDEAS AND DESIGNS INCORPORATED HEREIN, AS AN INSTRUMENT OF PROFESSIONAL SERVICE, IS THE PROPERTY OF CH2M HILL AND IS NOT TO BE USED, IN WHOLE OR IN PART, FOR ANY OTHER PROJECT WITHOUT THE WRITTEN AUTHORIZATION OF CH2M HILL.

3011 SW WILLISTON RD
GAINESVILLE, FL 32608
EB0000072 AAC001992
DELAYNE LANGE - PE 70194

SWWRF NITROGEN REMOVAL
AND DIGESTER MODIFICATIONS
MANATEE COUNTY UTILITIES
MANATEE COUNTY, FL

CH2MHILL®

STRUCTURAL
AERATION BASINS
WET WELLS
LOWER AND UPPER PLANS

VERIFY SCALE
BAR IS ONE INCH ON ORIGINAL DRAWING.
0 1"

DATE	DECEMBER 2013
PROJ	457133
DWG	520-S-2002
SHEET	of

ISSUED FOR BID

FILENAME: 520-S-2002_457133.dgn PLOT DATE: 12/13/2013 PLOT TIME: 2:15:52 PM

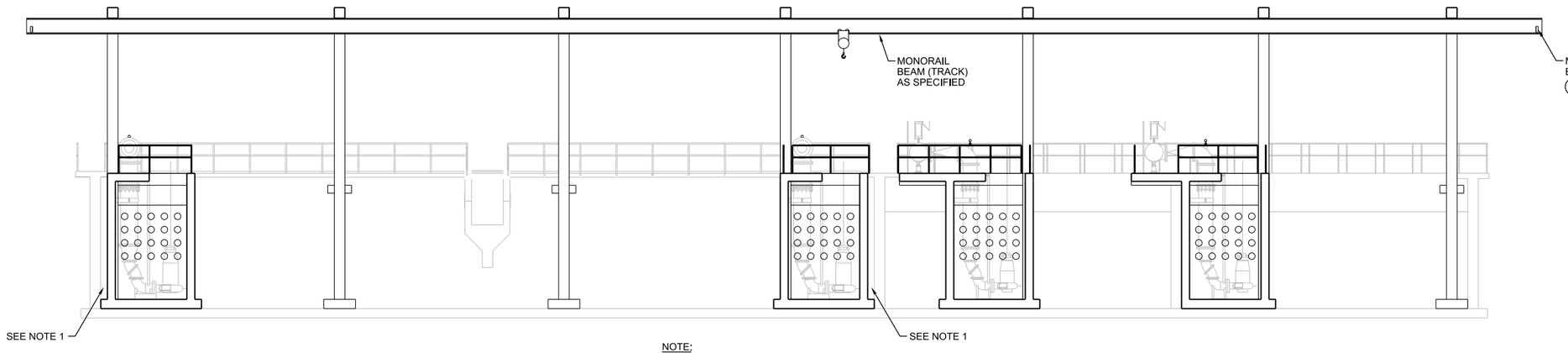

NOTE:

1. CONTRACTOR MAY MAKE WALL 10" THICKER TO FILL GAP.

A SECTION
1/8"=1'-0"
520-S-2001

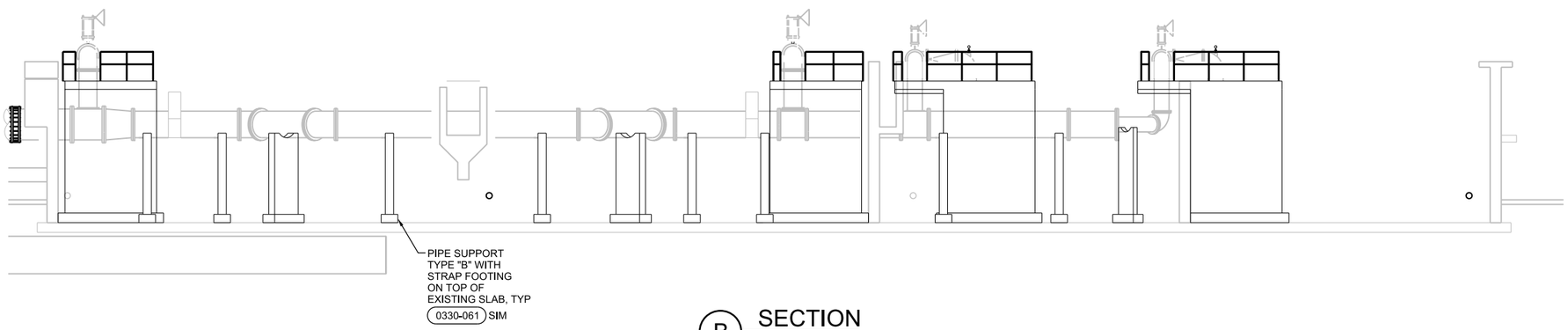

B SECTION
1/8"=1'-0"
520-S-2001

DELAYNE LANGE
LICENSE
No 70194
STATE OF
FLORIDA
PROFESSIONAL ENGINEER

NO.	DATE	REVISION	BY	APVD

DSGN D LANGE | DR B BARBER | CHK M CHRZANOWSKI | APVD D LANGE

©CH2M HILL 2012. ALL RIGHTS RESERVED.

3011 SW WILLISTON RD
GAINESVILLE, FL 32608
EB000072 AAC001992
DELAYNE LANGE - PE 70194

SWWRF NITROGEN REMOVAL
AND DIGESTER MODIFICATIONS
MANATEE COUNTY UTILITIES
MANATEE COUNTY, FL

CH2MHILL®

STRUCTURAL
AERATION BASINS
OVERALL SECTIONS

REUSE OF DOCUMENTS: THIS DOCUMENT, AND THE IDEAS AND DESIGNS INCORPORATED HEREIN, AS AN INSTRUMENT OF PROFESSIONAL SERVICE, IS THE PROPERTY OF CH2M HILL AND IS NOT TO BE USED, IN WHOLE OR IN PART, FOR ANY OTHER PROJECT WITHOUT THE WRITTEN AUTHORIZATION OF CH2M HILL.

ISSUED FOR BID

VERIFY SCALE
BAR IS ONE INCH ON ORIGINAL DRAWING.
0 1"

DATE	DECEMBER 2013
PROJ	457133
DWG	520-S-3001
SHEET	of

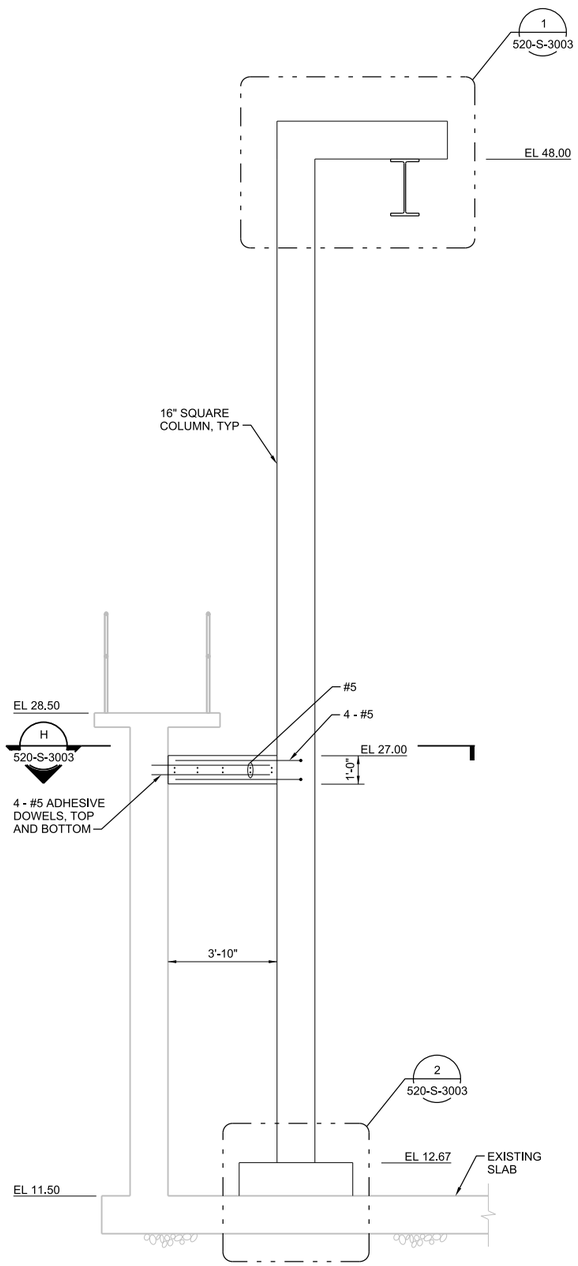

C SECTION
3/8"=1'-0"
520-S-2001

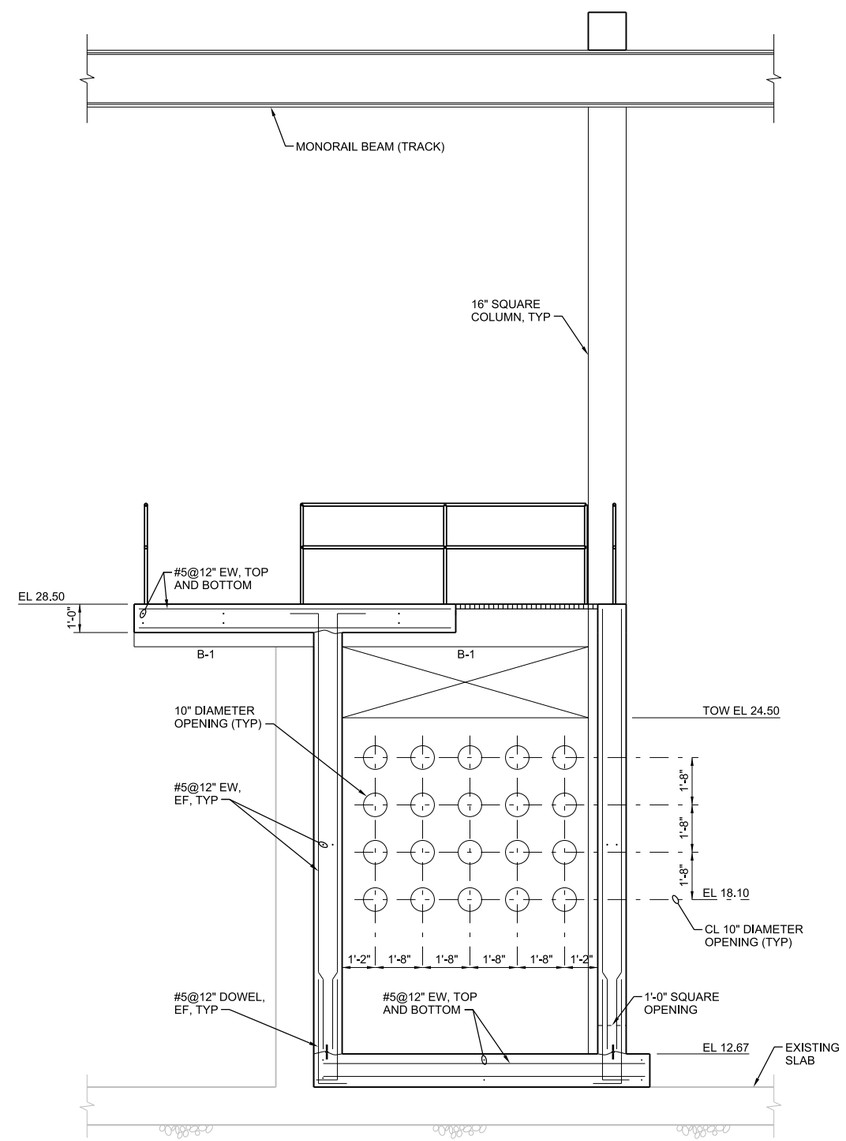

NOTE:
10" DIAMETER OPENING LAYOUT TYPICAL FOR WEST WALL OF WET WELLS 1 - 4

D SECTION
3/8"=1'-0"
520-S-2002

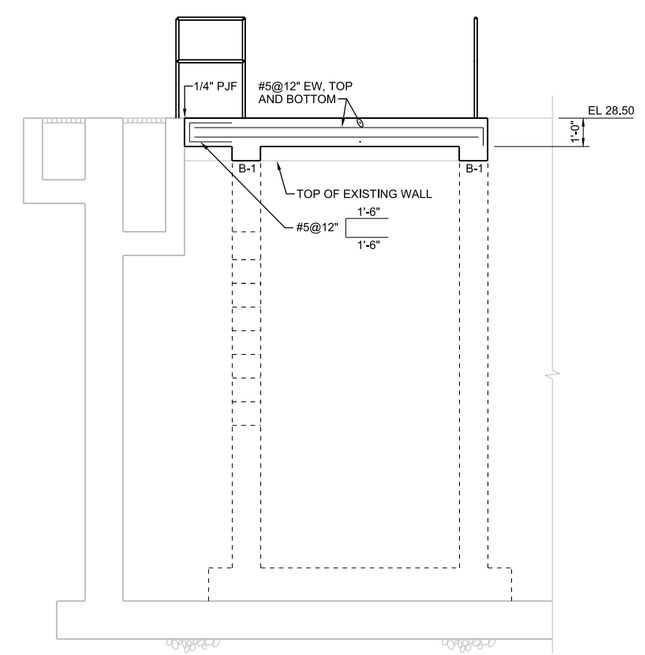

E SECTION
3/8"=1'-0"
520-S-2002

DELAYNE LANGE
LICENSE
No 70194
STATE OF FLORIDA
PROFESSIONAL ENGINEER

NO.	DATE	REVISION	BY	APVD

DSGN D LANGE | DR B BARBER | CHK M CHRZANOWSKI | APVD D LANGE

©CH2M HILL 2012. ALL RIGHTS RESERVED.

REUSE OF DOCUMENTS: THIS DOCUMENT, AND THE IDEAS AND DESIGNS INCORPORATED HEREIN, AS AN INSTRUMENT OF PROFESSIONAL SERVICE IS THE PROPERTY OF CH2M HILL AND IS NOT TO BE USED, IN WHOLE OR IN PART, FOR ANY OTHER PROJECT WITHOUT THE WRITTEN AUTHORIZATION OF CH2MHILL.

3011 SW WILLISTON RD
GAINESVILLE, FL 32608
EB0000072 AAC001992
DELAYNE LANGE - PE 70194

SWWRF NITROGEN REMOVAL AND DIGESTER MODIFICATIONS
MANATEE COUNTY UTILITIES
MANATEE COUNTY, FL

CH2MHILL®

STRUCTURAL
AERATION BASINS SECTIONS

VERIFY SCALE
BAR IS ONE INCH ON ORIGINAL DRAWING.
0 1"

DATE	DECEMBER 2013
PROJ	457133
DWG	520-S-3002
SHEET	of

ISSUED FOR BID

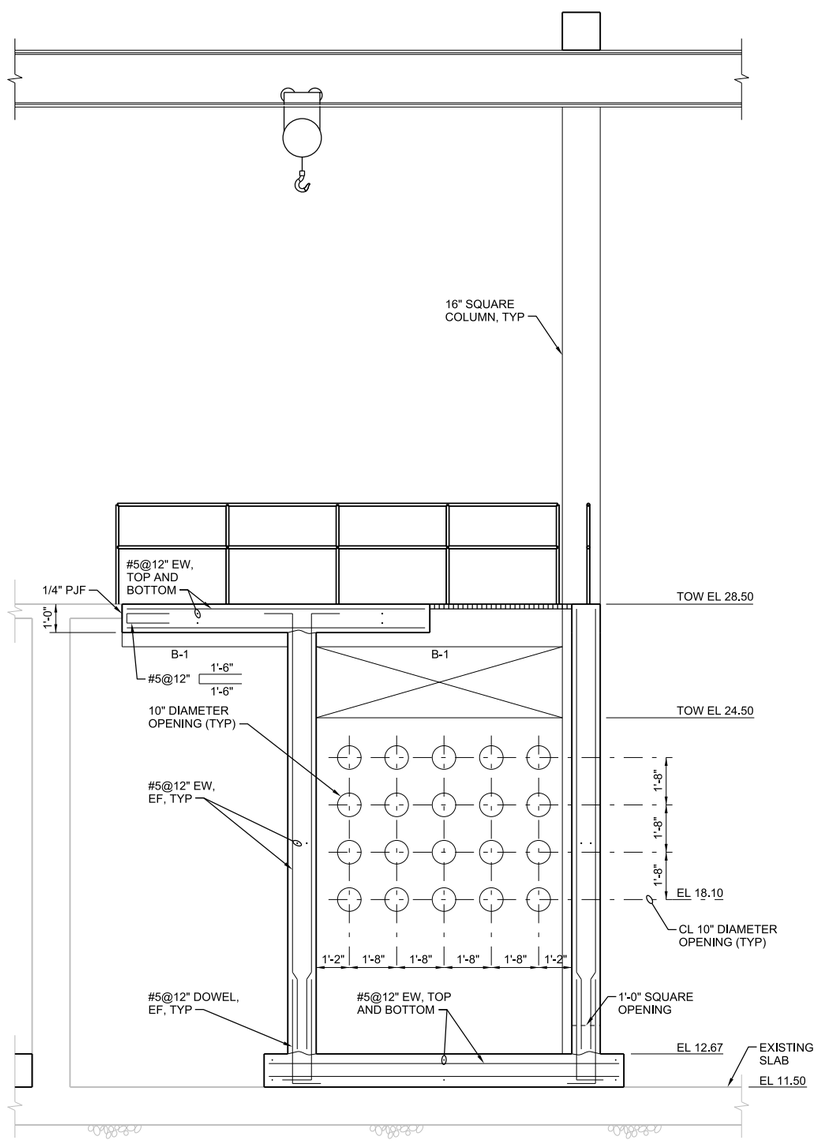

F SECTION
3/8"=1'-0"
520-S-2002

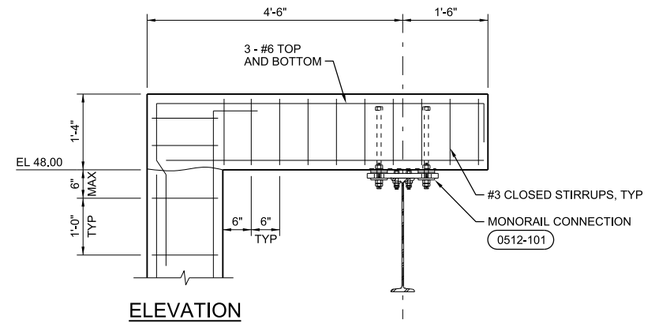

ELEVATION

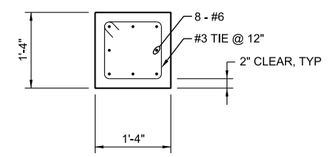

PLAN

1 DETAIL
3/4"=1'-0"
520-S-3002

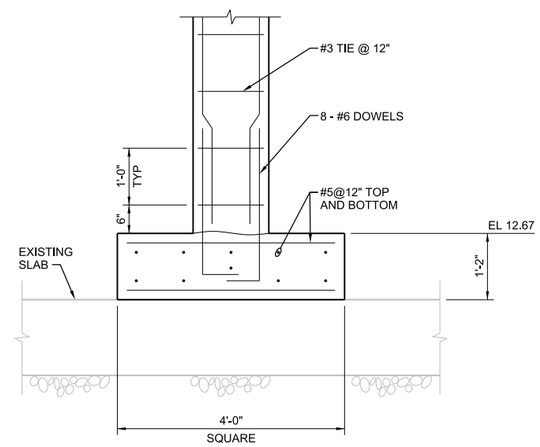

2 DETAIL
3/4"=1'-0"
520-S-3002

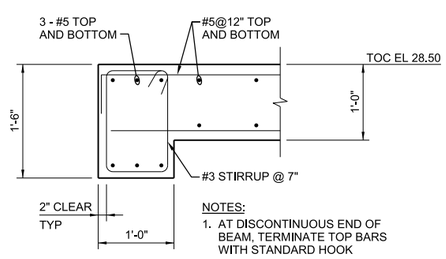

NOTES:
1. AT DISCONTINUOUS END OF BEAM, TERMINATE TOP BARS WITH STANDARD HOOK

G SECTION
1"=1'-0"
520-S-2002

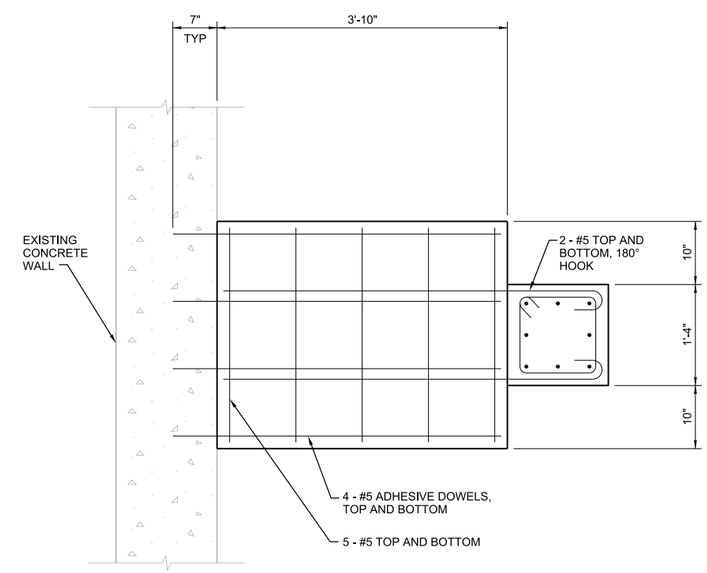

H SECTION
1"=1'-0"
520-S-3002

DELAYNE LANGE
LICENSE
No 70194
STATE OF FLORIDA
PROFESSIONAL ENGINEER

NO.	DATE	REVISION	BY	APVD

DSGN D LANGE | DR D LANGE | CHK M CHRZANOWSKI | APVD B BARBER

©CH2M HILL 2012. ALL RIGHTS RESERVED.

REUSE OF DOCUMENTS: THIS DOCUMENT, AND THE IDEAS AND DESIGNS INCORPORATED HEREIN, AS AN INSTRUMENT OF PROFESSIONAL SERVICE IS THE PROPERTY OF CH2M HILL AND IS NOT TO BE USED, IN WHOLE OR IN PART, FOR ANY OTHER PROJECT WITHOUT THE WRITTEN AUTHORIZATION OF CH2MHILL.

3011 SW WILLISTON RD
GAINESVILLE, FL 32608
EB0000072 AAC001992
DELAYNE LANGE - PE 70194

SWWRF NITROGEN REMOVAL
AND DIGESTER MODIFICATIONS
MANATEE COUNTY UTILITIES
MANATEE COUNTY, FL

CH2MHILL®

STRUCTURAL
AERATION BASINS
SECTIONS AND DETAILS

VERIFY SCALE
BAR IS ONE INCH ON ORIGINAL DRAWING.
0 1"

DATE	DECEMBER 2013
PROJ	457133
DWG	520-S-3003
SHEET	of

ISSUED FOR BID

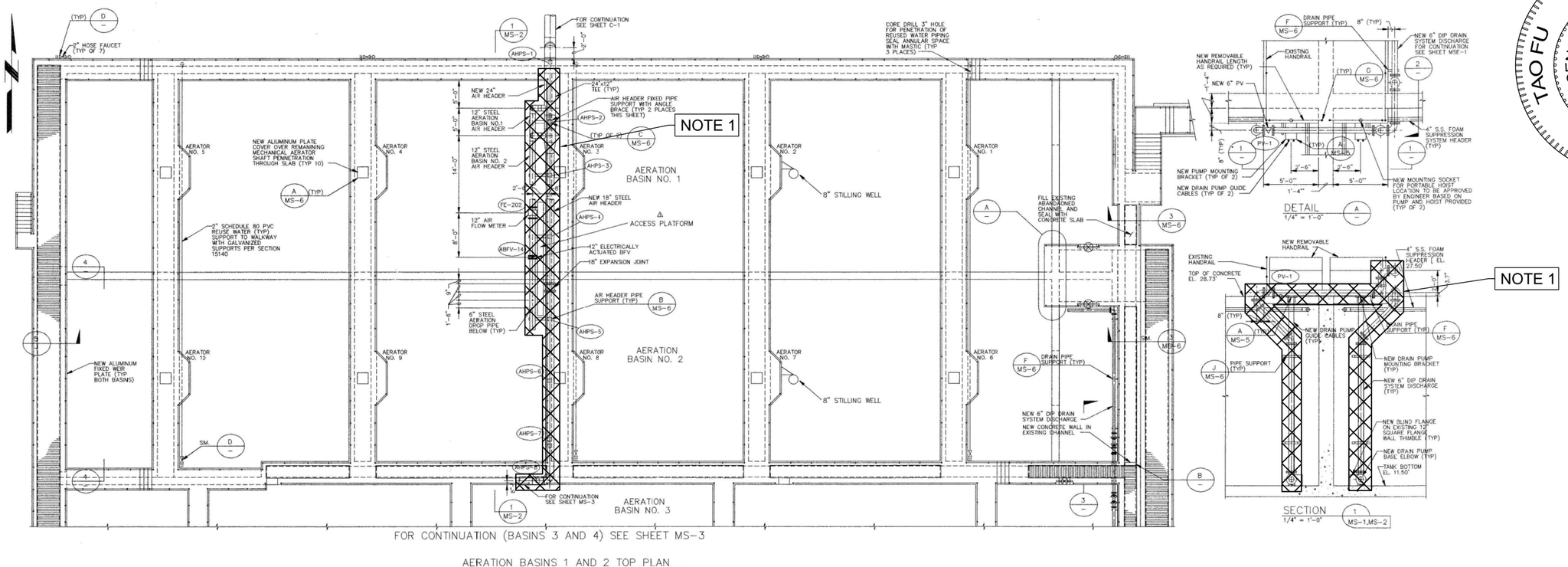

AERATION BASINS 1 AND 2 TOP PLAN
1/8" = 1'-0"

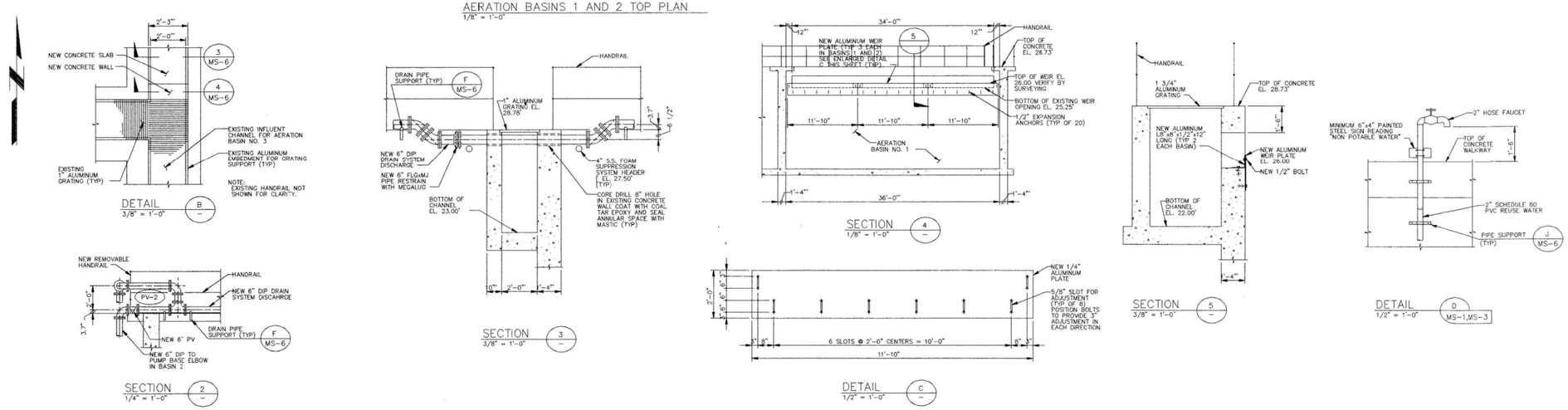

DEMOLITION PLAN & SECTIONS

NTS

NOTES:

1. DEMOLISH AIR PIPING, VALVES, INSTRUMENTS, AND ASSOCIATED PIPE SUPPORTS DOWNSTREAM OF NEW 24"-V510. PLUG EXISTING 24" PIPE.
2. DEMOLISH AERATION HEADERS AND DIFFUSERS AND THEIR SUPPORTS IN ALL FOUR BASINS. (NOT SHOWN ON DRAWINGS)
3. REMOVE ALL CONCRETE ANCHORS AND EMBEDDED ITEMS TO 2" BELOW CONCRETE SURFACE. REFER TO DETAIL 0330-143

TAO FU
LICENSE
No 63138
STATE OF FLORIDA
PROFESSIONAL ENGINEER

NO.	DATE	REVISION	CHK	APVD

DSGN T FU | DR T FU | CHK N PATTERSON | APVD R BOE

©CH2M HILL 2012. ALL RIGHTS RESERVED.

REUSE OF DOCUMENTS: THIS DOCUMENT, AND THE IDEAS AND DESIGNS INCORPORATED HEREIN, AS AN INSTRUMENT OF PROFESSIONAL SERVICE IS THE PROPERTY OF CH2M HILL AND IS NOT TO BE USED, IN WHOLE OR IN PART, FOR ANY OTHER PROJECT WITHOUT THE WRITTEN AUTHORIZATION OF CH2MHILL.

3011 SW WILLISTON RD
GAINESVILLE, FL 32608
EB0000072 AAC001992
TAO FU - PE 63138

SWWRF NITROGEN REMOVAL AND DIGESTER MODIFICATIONS
MANATEE COUNTY UTILITIES
MANATEE COUNTY, FL

CH2MHILL®

DEMOLITION
AERATION BASINS 1 & 2
UPPER PLAN AND SECTIONS

VERIFY SCALE
BAR IS ONE INCH ON ORIGINAL DRAWING.
0 1"

DATE	DECEMBER 2013
PROJ	457133
DWG	520-D-1001
SHEET	of

ISSUED FOR BID

FILENAME: 520-D-1001_457133.dgn PLOT DATE: 12/13/2013 PLOT TIME: 2:10:32 PM

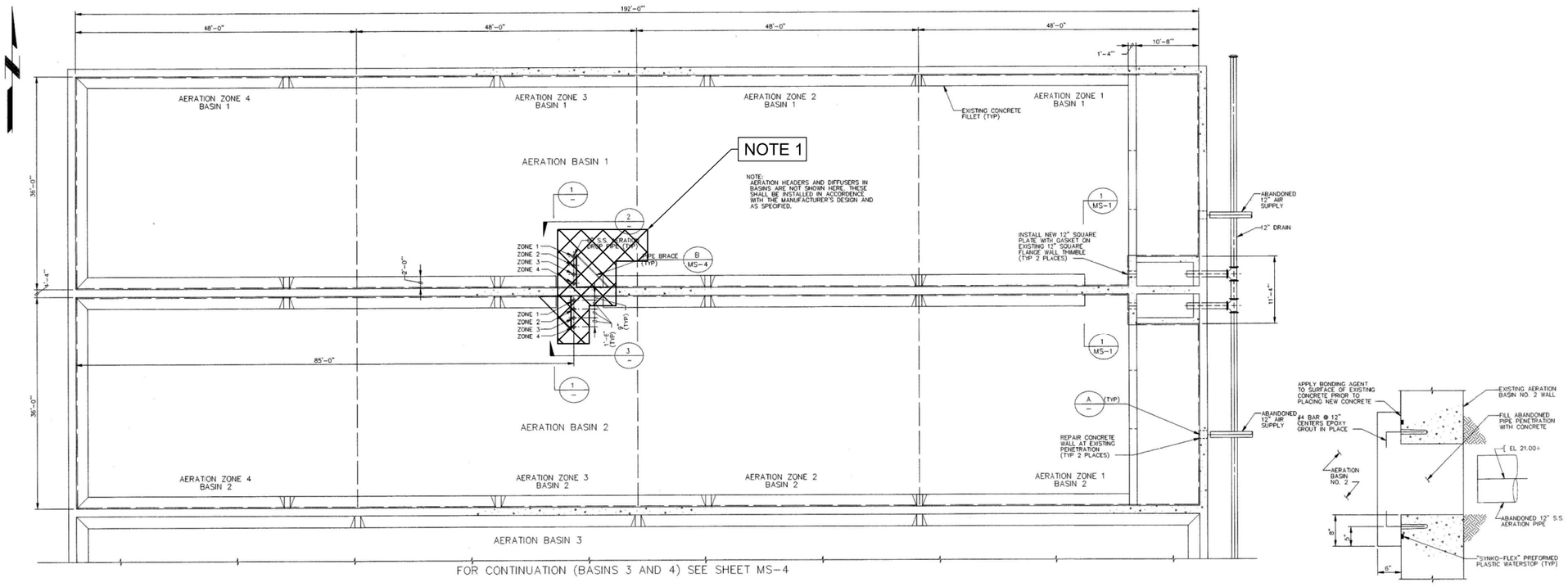

AERATION BASINS 1 AND 2 SECTIONAL PLAN
1/8" = 1'-0"

DETAIL A
NO SCALE

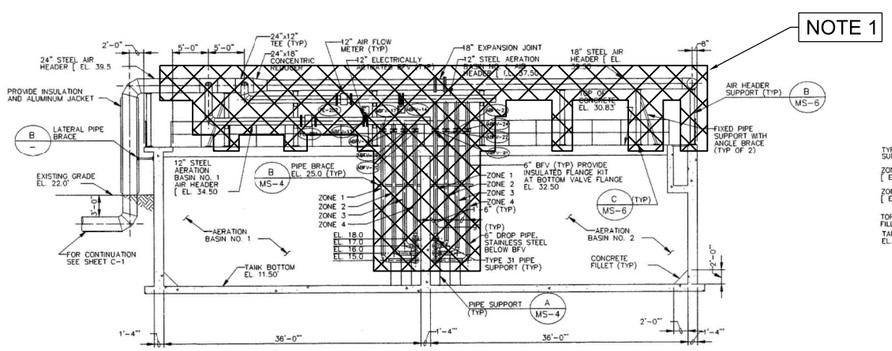

SECTION 1
1/8" = 1'-0"
MS-1,MS-2

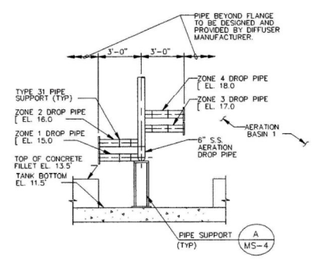

SECTION 2
1/4" = 1'-0"

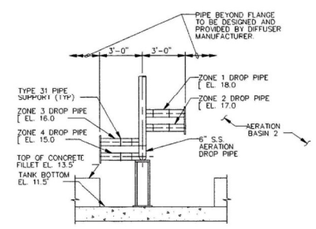

SECTION 3
1/4" = 1'-0"

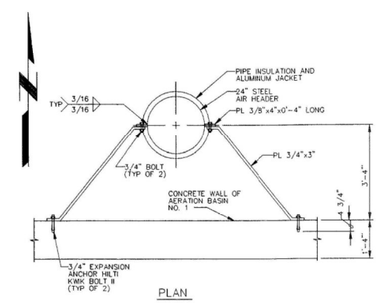

LATERAL PIPE BRACE DETAIL
1/2" = 1'-0"

NOTES:

1. DEMOLISH AIR PIPING, VALVES, INSTRUMENTS, AND ASSOCIATED PIPE SUPPORTS DOWNSTREAM OF NEW 24"-V510. PLUG EXISTING 24" PIPE.
2. DEMOLISH AERATION HEADERS AND DIFFUSERS AND THEIR SUPPORTS IN ALL FOUR BASINS. (NOT SHOWN ON DRAWINGS)
3. REMOVE ALL CONCRETE ANCHORS AND EMBEDDED ITEMS TO 2" BELOW CONCRETE SURFACE. REFER TO DETAIL 0330-143

DEMOLITION PLAN & SECTIONS
NTS

TAO FU
LICENSE
No 63138
STATE OF FLORIDA
PROFESSIONAL ENGINEER

NO.	DATE	REVISION	DR	CHK	APVD
DSGN			T FU	N PATTERSON	R BOE

T FU

©CH2M HILL 2012. ALL RIGHTS RESERVED.

REUSE OF DOCUMENTS: THIS DOCUMENT, AND THE IDEAS AND DESIGNS INCORPORATED HEREIN, AS AN INSTRUMENT OF PROFESSIONAL SERVICE, IS THE PROPERTY OF CH2M HILL AND IS NOT TO BE USED, IN WHOLE OR IN PART, FOR ANY OTHER PROJECT WITHOUT THE WRITTEN AUTHORIZATION OF CH2M HILL.

3011 SW WILLISTON RD
GAINESVILLE, FL 32608
EB0000072 AAC001992
TAO FU - PE 63138

SWWRF NITROGEN REMOVAL AND DIGESTER MODIFICATIONS
MANATEE COUNTY UTILITIES
MANATEE COUNTY, FL

CH2MHILL®

DEMOLITION
AERATION BASINS 1 & 2
LOWER PLAN AND SECTIONS

VERIFY SCALE
BAR IS ONE INCH ON ORIGINAL DRAWING.
0 1"

DATE	DECEMBER 2013
PROJ	457133
DWG	520-D-1002
SHEET	of

ISSUED FOR BID

FILENAME: 520-D-1002_457133.dgn PLOT DATE: 12/13/2013 PLOT TIME: 2:10:53 PM

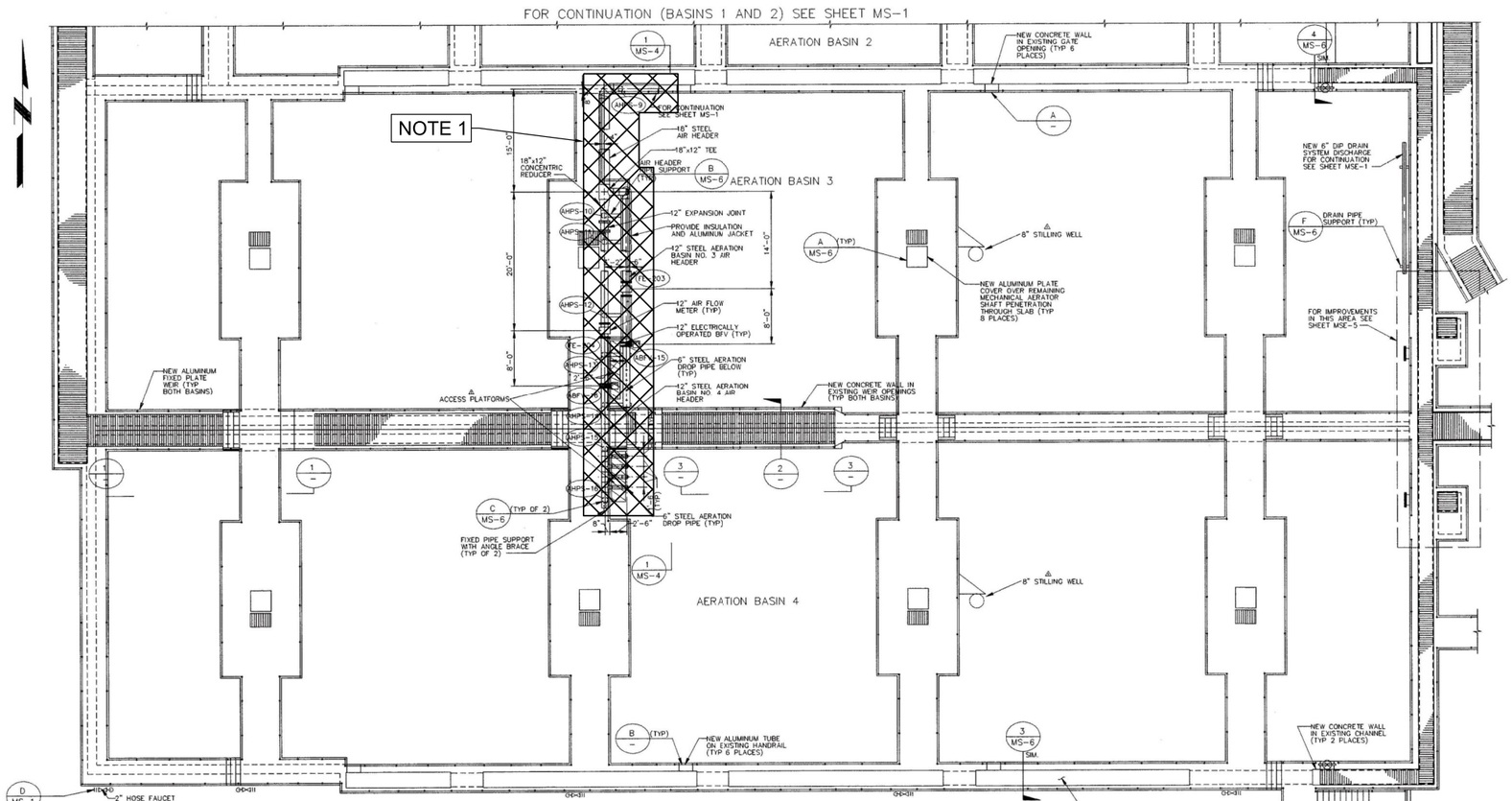

AERATION BASINS 3 AND 4 TOP PLAN
1/8" = 1'-0"

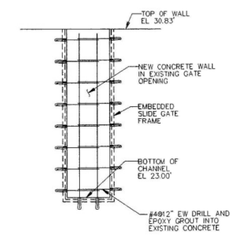

SECTION 4
3/8" = 1'-0"

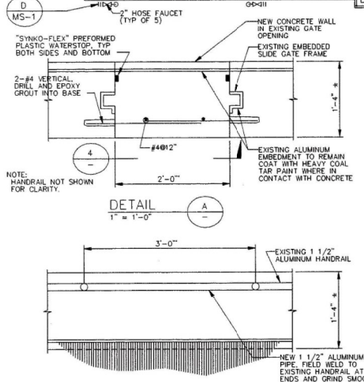

DETAIL A
1" = 1'-0"

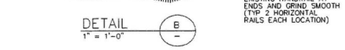

DETAIL B
1" = 1'-0"

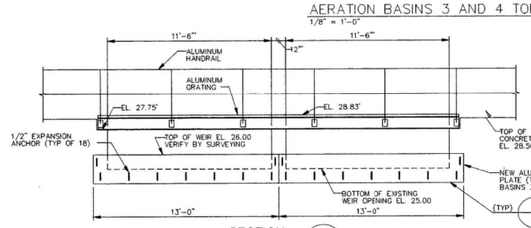

SECTION 1
1/4" = 1'-0"

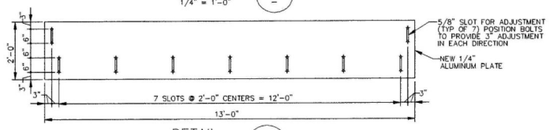

DETAIL C
1/2" = 1'-0"

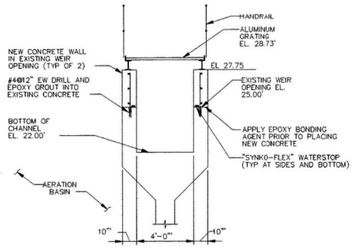

SECTION 2
1/4" = 1'-0"

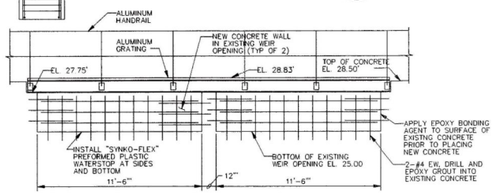

SECTION 3
1/4" = 1'-0"

DEMOLITION PLAN & SECTIONS

NTS

NOTES:

1. DEMOLISH AIR PIPING, VALVES, INSTRUMENTS, AND ASSOCIATED PIPE SUPPORTS DOWNSTREAM OF NEW 24"-V510. PLUG EXISTING 24" PIPE.
2. DEMOLISH AERATION HEADERS AND DIFFUSERS AND THEIR SUPPORTS IN ALL FOUR BASINS. (NOT SHOWN ON DRAWINGS)
3. REMOVE ALL CONCRETE ANCHORS AND EMBEDDED ITEMS TO 2" BELOW CONCRETE SURFACE. REFER TO DETAIL 0330-143

TAO FU
LICENSE
No 63138
STATE OF FLORIDA
PROFESSIONAL ENGINEER

NO.	DATE	REVISION	CHK	APVD

DSGN T FU | DR N PATTERSON | CHK T FU | APVD R BOE

3011 SW WILLISTON RD
GAINESVILLE, FL 32608
EB0000072 AAC001992
TAO FU - PE 63138

SWWRF NITROGEN REMOVAL AND DIGESTER MODIFICATIONS
MANATEE COUNTY UTILITIES
MANATEE COUNTY, FL

CH2MHILL®

DEMOLITION
AERATION BASINS 3 & 4
UPPER PLAN AND SECTIONS

REUSE OF DOCUMENTS: THIS DOCUMENT, AND THE IDEAS AND DESIGNS INCORPORATED HEREIN, AS AN INSTRUMENT OF PROFESSIONAL SERVICE IS THE PROPERTY OF CH2M HILL AND IS NOT TO BE USED, IN WHOLE OR IN PART, FOR ANY OTHER PROJECT WITHOUT THE WRITTEN AUTHORIZATION OF CH2MHILL.
©CH2M HILL 2012. ALL RIGHTS RESERVED.

VERIFY SCALE
BAR IS ONE INCH ON ORIGINAL DRAWING.
0 1"

DATE	DECEMBER 2013
PROJ	457133
DWG	520-D-1003
SHEET	of

ISSUED FOR BID

FILENAME: 520-D-1003_457133.dgn PLOT DATE: 12/13/2013 PLOT TIME: 2:11:27 PM

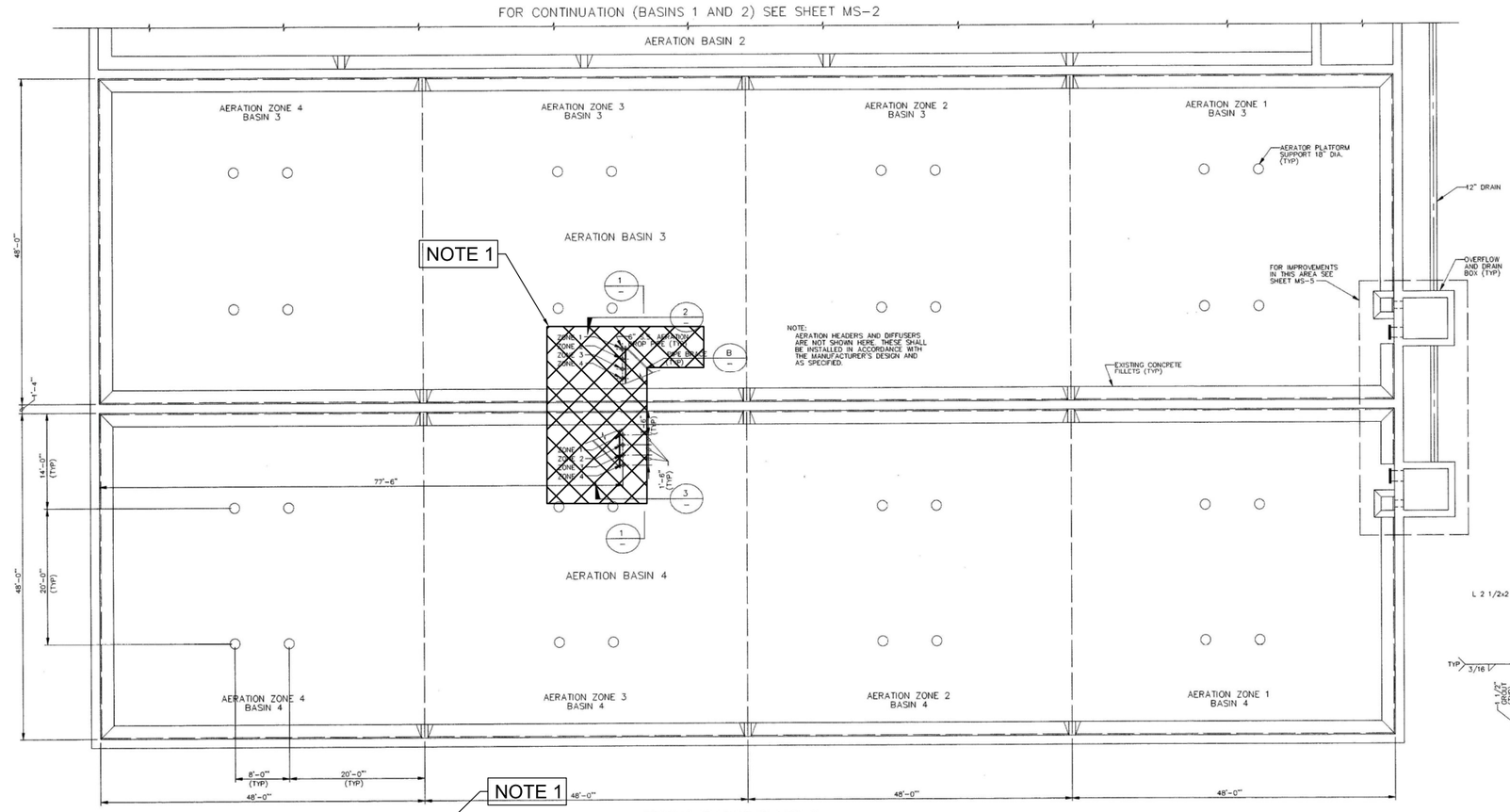

AERATION BASINS 3 AND 4
SECTIONAL PLAN
1/8" = 1'-0"

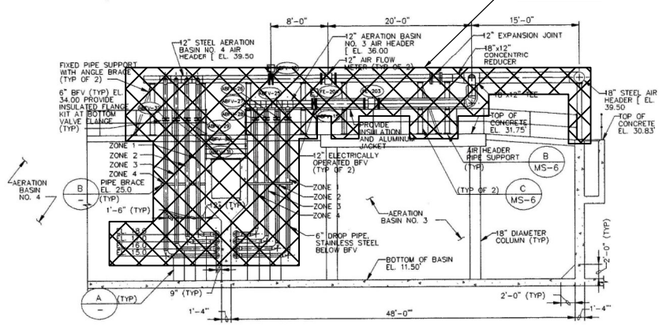

SECTION 1
1/8" = 1'-0"
MS-3,MS-4

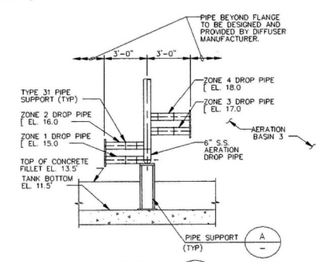

SECTION 2
1/4" = 1'-0"

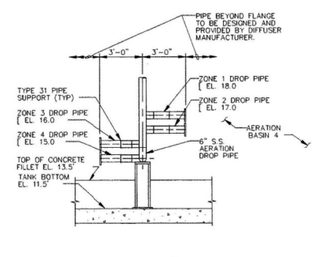

SECTION 3
1/4" = 1'-0"

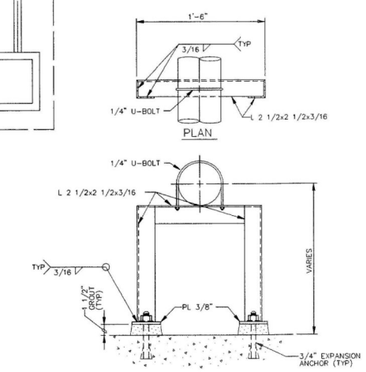

DETAIL A
1 1/2" = 1'-0"
MS-2,MS-4

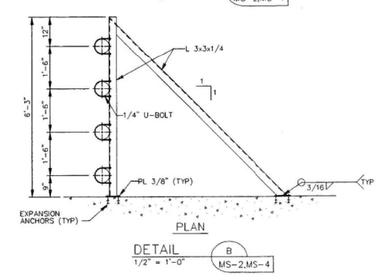

DETAIL B
1/2" = 1'-0"
MS-2,MS-4

NOTES:

1. DEMOLISH AIR PIPING, VALVES, INSTRUMENTS, AND ASSOCIATED PIPE SUPPORTS DOWNSTREAM OF NEW 24"-V510. PLUG EXISTING 24" PIPE.
2. DEMOLISH AERATION HEADERS AND DIFFUSERS AND THEIR SUPPORTS IN ALL FOUR BASINS. (NOT SHOWN ON DRAWINGS)
3. REMOVE ALL CONCRETE ANCHORS AND EMBEDDED ITEMS TO 2" BELOW CONCRETE SURFACE. REFER TO DETAIL 0330-143

DEMOLITION PLAN & SECTIONS

NTS

TAO FU
LICENSE
No 63138
STATE OF FLORIDA
PROFESSIONAL ENGINEER

NO.	DATE	REVISION	DR	CHK	APVD
DSGN			T FU	N PATTERSON	R BOE

T FU

©CH2M HILL 2012. ALL RIGHTS RESERVED.

REUSE OF DOCUMENTS: THIS DOCUMENT, AND THE IDEAS AND DESIGNS INCORPORATED HEREIN, AS AN INSTRUMENT OF PROFESSIONAL SERVICE, IS THE PROPERTY OF CH2M HILL AND IS NOT TO BE USED, IN WHOLE OR IN PART, FOR ANY OTHER PROJECT WITHOUT THE WRITTEN AUTHORIZATION OF CH2M HILL.

3011 SW WILLISTON RD
GAINESVILLE, FL 32608
EB0000072 AAC001992
TAO FU - PE 63138

SWWRF NITROGEN REMOVAL
AND DIGESTER MODIFICATIONS
MANATEE COUNTY UTILITIES
MANATEE COUNTY, FL

CH2MHILL®

DEMOLITION
AERATION BASINS 3 & 4
LOWER PLAN AND SECTIONS

VERIFY SCALE
BAR IS ONE INCH ON ORIGINAL DRAWING.
0 1"

DATE	DECEMBER 2013
PROJ	457133
DWG	520-D-1004
SHEET	of

ISSUED FOR BID

FILENAME: 520-D-1004_457133.dgn PLOT DATE: 12/13/2013 PLOT TIME: 2:12:20 PM

NOTES:

1. DIFFUSER GRIDS ARE NOT SHOWN. THESE SHALL BE INSTALLED BY CONTRACTOR IN ACCORDANCE WITH THE SPECIFICATIONS AND MANUFACTURER'S INSTRUCTIONS.

NOTES:

1. AIR PIPING WITHIN LIMITS OF AERATION BASIN SHALL BE CONTRACTOR DESIGNED.

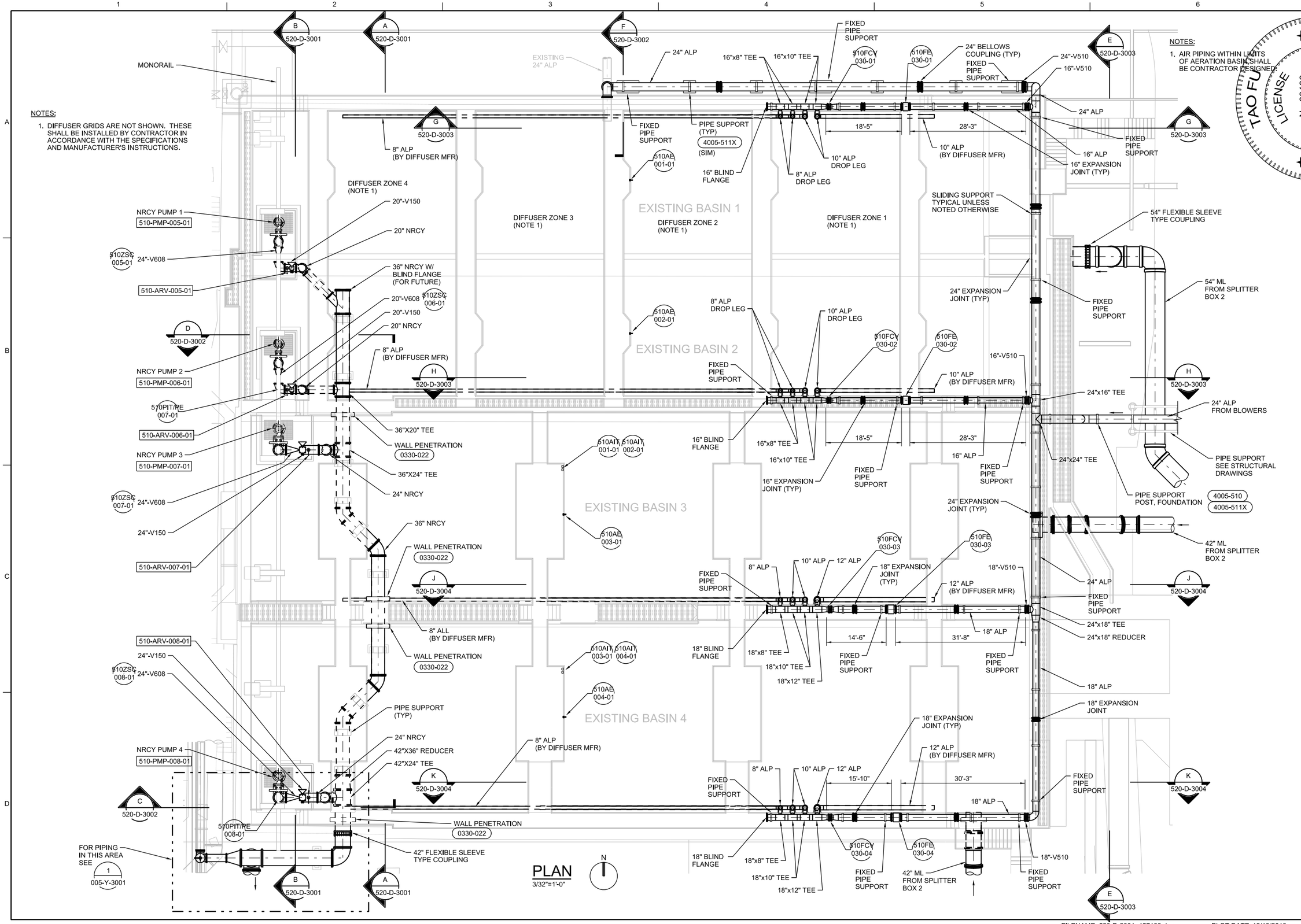

NO.	DATE	REVISION	CHK	APVD
DSGN	T FU	DR N PATTERSON		R BOE

3011 SW WILLISTON RD
GAINESVILLE, FL 32608
EB0000072 AAC001992
TAO FU - PE 63138

SWWRF NITROGEN REMOVAL AND DIGESTER MODIFICATIONS
MANATEE COUNTY UTILITIES
MANATEE COUNTY, FL

CH2MHILL®

PROCESS
AERATION BASINS PLAN

VERIFY SCALE
BAR IS ONE INCH ON ORIGINAL DRAWING.
0 1"

DATE	DECEMBER 2013
PROJ	457133
DWG	520-D-2001
SHEET	of

ISSUED FOR BID

REUSE OF DOCUMENTS: THIS DOCUMENT, AND THE IDEAS AND DESIGNS INCORPORATED HEREIN, AS AN INSTRUMENT OF PROFESSIONAL SERVICE, IS THE PROPERTY OF CH2M HILL AND IS NOT TO BE USED, IN WHOLE OR IN PART, FOR ANY OTHER PROJECT WITHOUT THE WRITTEN AUTHORIZATION OF CH2M HILL.

©CH2M HILL 2012. ALL RIGHTS RESERVED.

FILENAME: 520-D-2001_457133.dgn PLOT DATE: 12/13/2013 PLOT TIME: 2:14:38 PM

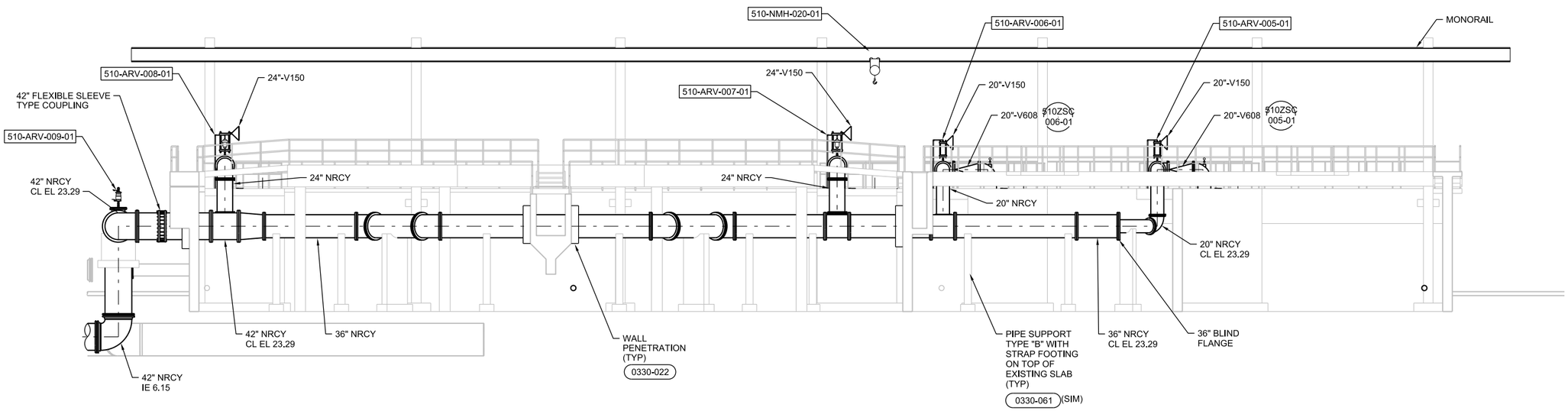

A SECTION
1/8"=1'-0"
520-D-2001

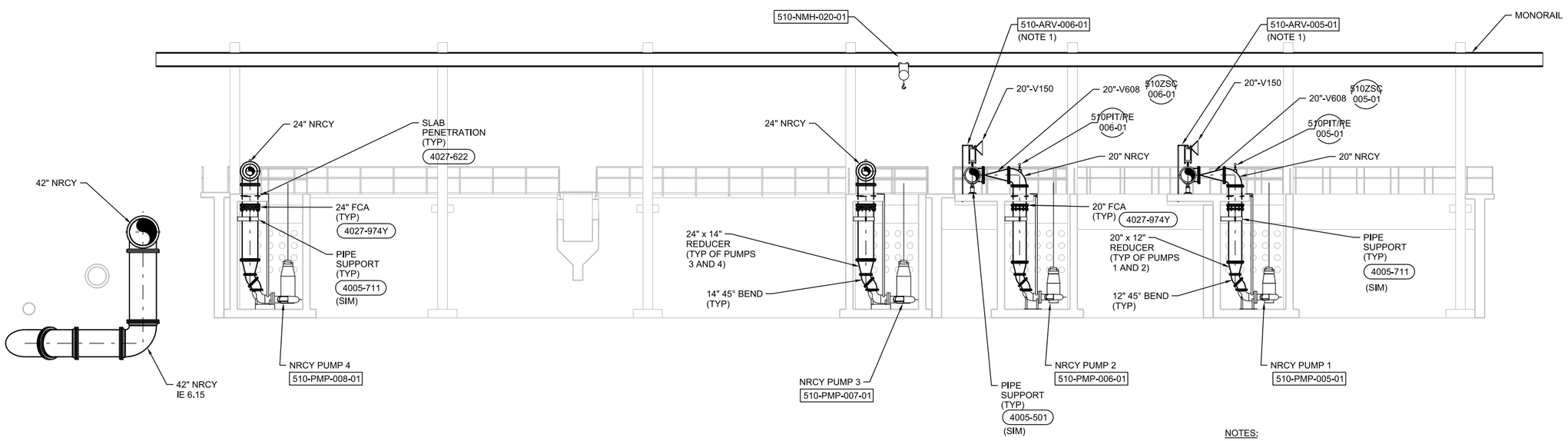

NOTES:

1. CONTRACTOR TO ROUTE ARV DISCHARGE LINE BACK INTO BASIN.

B SECTION
1/8"=1'-0"
520-D-2001

TAO FU LICENSE No 63138 STATE OF FLORIDA PROFESSIONAL ENGINEER

NO.	DATE	REVISION	CHK	APVD

DSGN T FU | DR T FU | CHK N PATTERSON | APVD R BOE

©CH2M HILL 2012. ALL RIGHTS RESERVED.

REUSE OF DOCUMENTS: THIS DOCUMENT, AND THE IDEAS AND DESIGNS INCORPORATED HEREIN, AS AN INSTRUMENT OF PROFESSIONAL SERVICE, IS THE PROPERTY OF CH2M HILL AND IS NOT TO BE USED, IN WHOLE OR IN PART, FOR ANY OTHER PROJECT WITHOUT THE WRITTEN AUTHORIZATION OF CH2M HILL.

3011 SW WILLISTON RD
GAINESVILLE, FL 32608
EB0000072 AAC001992
TAO FU - PE 63138

SWWRF NITROGEN REMOVAL AND DIGESTER MODIFICATIONS
MANATEE COUNTY UTILITIES
MANATEE COUNTY, FL

CH2MHILL®

PROCESS
AERATION BASINS SECTIONS

VERIFY SCALE
BAR IS ONE INCH ON ORIGINAL DRAWING.
0 1"

DATE	DECEMBER 2013
PROJ	457133
DWG	520-D-3001
SHEET	of

ISSUED FOR BID

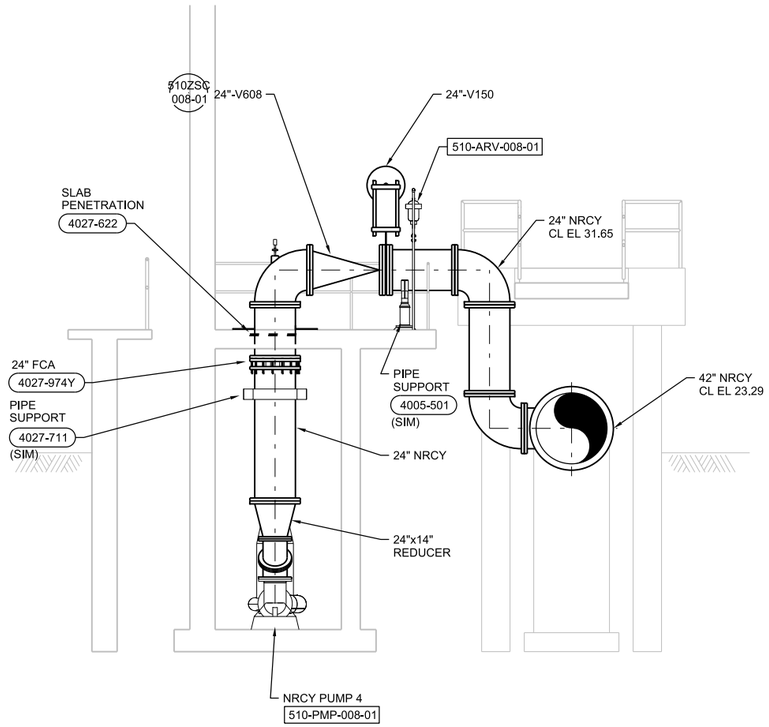

C SECTION
1/4"=1'-0"
520-D-2001

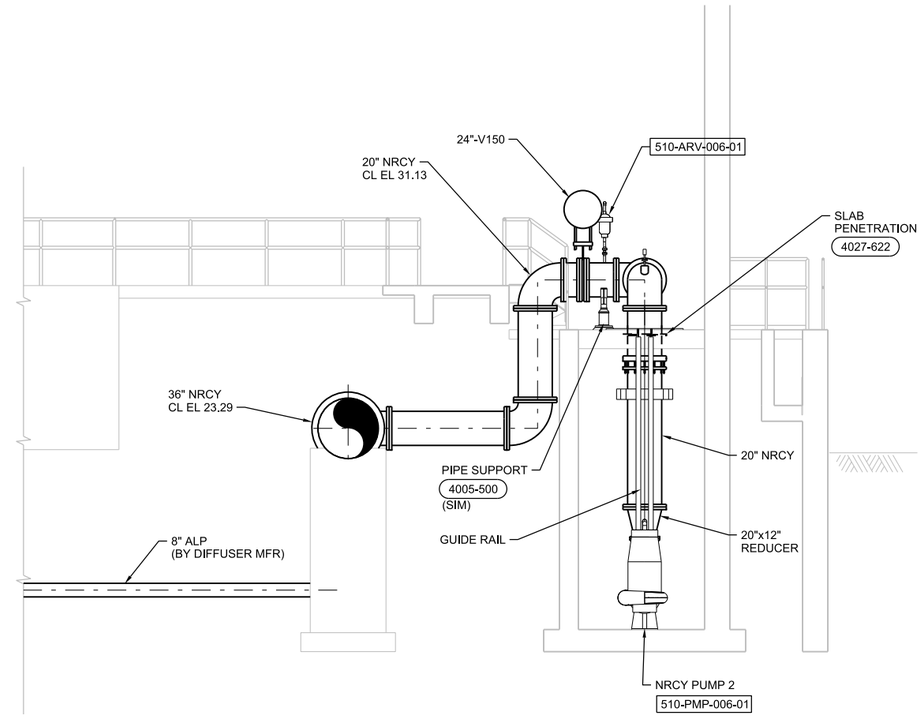

D SECTION
1/4"=1'-0"
520-D-2001

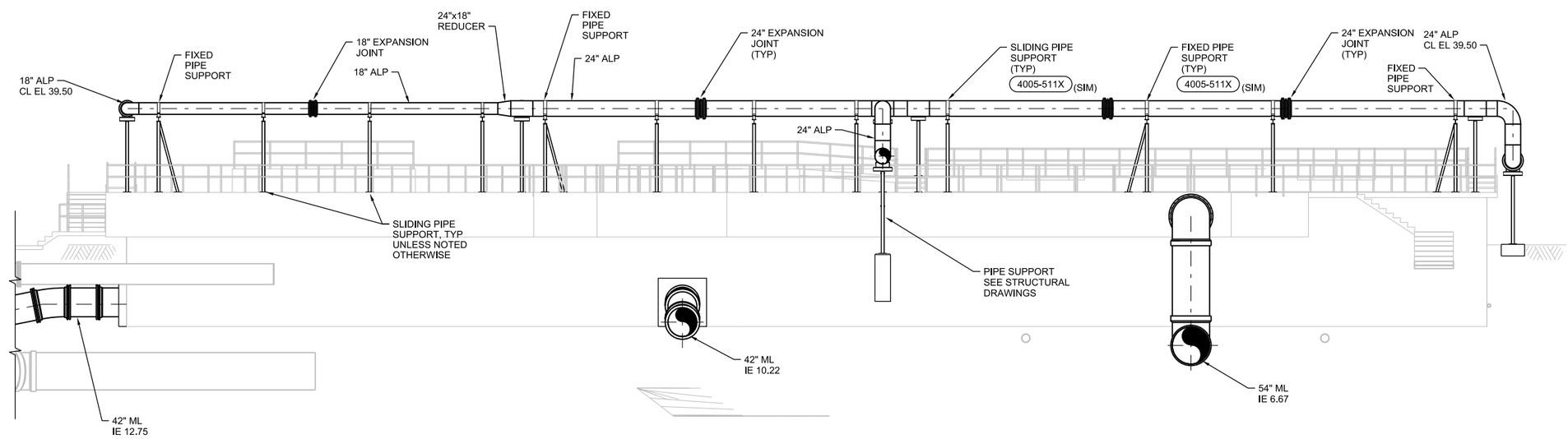

E SECTION
1/8"=1'-0"
520-D-2001

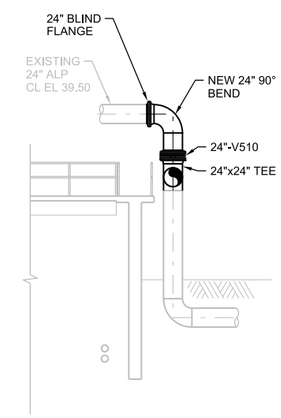

F SECTION
1/8"=1'-0"
520-D-2001

TAO FU
LICENSE
No 63138
STATE OF
FLORIDA
PROFESSIONAL ENGINEER

NO.	DATE	REVISION	CHK	APVD

DSGN T FU | DR N PATTERSON | CHK R BOE | APVD

REUSE OF DOCUMENTS: THIS DOCUMENT, AND THE IDEAS AND DESIGNS INCORPORATED HEREIN, AS AN INSTRUMENT OF PROFESSIONAL SERVICE, IS THE PROPERTY OF CH2M HILL AND IS NOT TO BE USED, IN WHOLE OR IN PART, FOR ANY OTHER PROJECT WITHOUT THE WRITTEN AUTHORIZATION OF CH2M HILL.
©CH2M HILL 2012. ALL RIGHTS RESERVED.

3011 SW WILLISTON RD
GAINESVILLE, FL 32608
EB0000072 AAC001992
TAO FU - PE 63138

SWWRF NITROGEN REMOVAL
AND DIGESTER MODIFICATIONS
MANATEE COUNTY UTILITIES
MANATEE COUNTY, FL

CH2MHILL®

PROCESS
AERATION BASINS
SECTIONS

VERIFY SCALE
BAR IS ONE INCH ON ORIGINAL DRAWING.
0 1"

DATE	DECEMBER 2013
PROJ	457133
DWG	520-D-3002
SHEET	of

ISSUED FOR BID

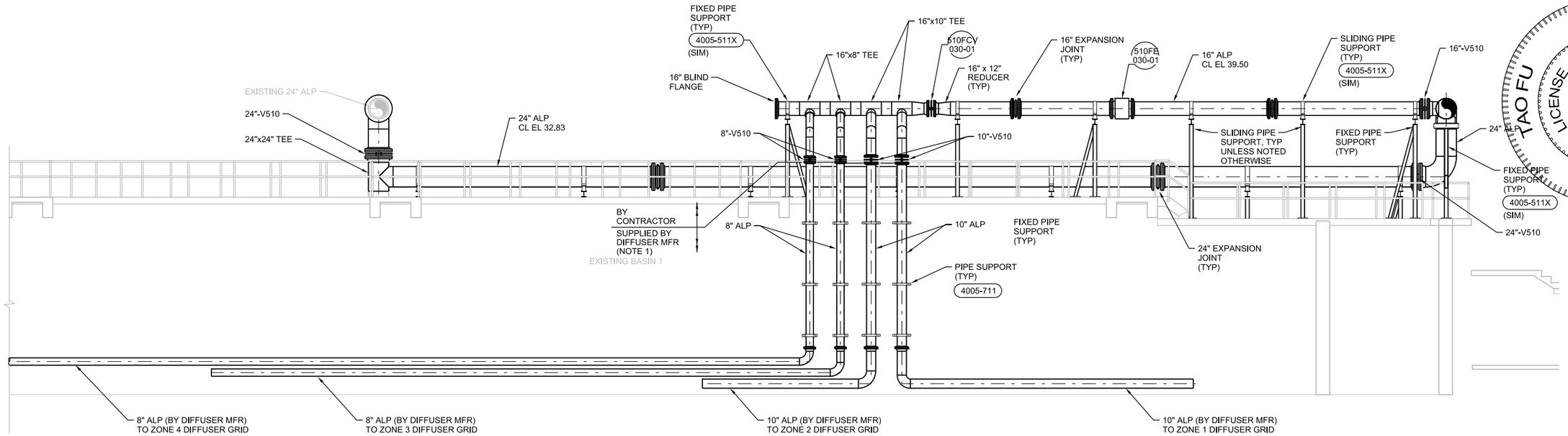

G SECTION
3/16"=1'-0"
520-D-2001

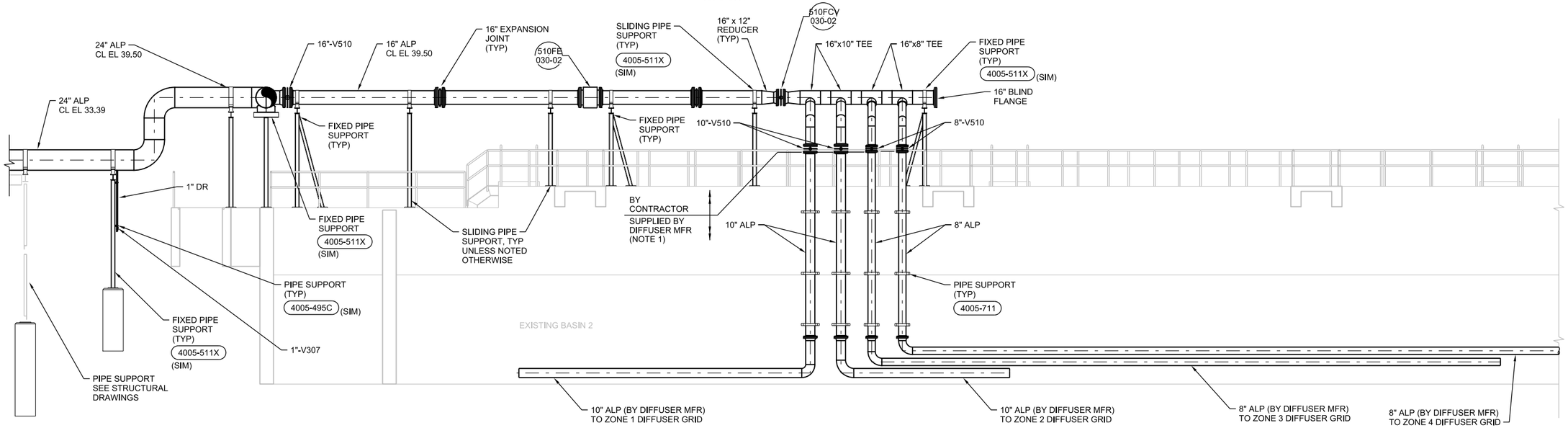

H SECTION
3/16"=1'-0"
520-D-2001

NOTES:

1. DIFFUSER GRIDS ARE NOT SHOWN. THESE SHALL BE INSTALLED BY CONTRACTOR IN ACCORDANCE WITH THE SPECIFICATIONS AND MANUFACTURER'S INSTRUCTIONS.

STATE OF FLORIDA
TAO FU
LICENSE
No 63138
PROFESSIONAL ENGINEER

NO.	DATE	REVISION	CHK	APVD

DSGN T FU | DR N PATTERSON | CHK R BOE | APVD T FU

REUSE OF DOCUMENTS: THIS DOCUMENT, AND THE IDEAS AND DESIGNS INCORPORATED HEREIN, AS AN INSTRUMENT OF PROFESSIONAL SERVICE, IS THE PROPERTY OF CH2M HILL AND IS NOT TO BE USED, IN WHOLE OR IN PART, FOR ANY OTHER PROJECT WITHOUT THE WRITTEN AUTHORIZATION OF CH2MHILL.
©CH2M HILL 2012. ALL RIGHTS RESERVED.

3011 SW WILLISTON RD
GAINESVILLE, FL 32608
EB0000072 AAC001992
TAO FU - PE 63138

SWWRF NITROGEN REMOVAL AND DIGESTER MODIFICATIONS
MANATEE COUNTY UTILITIES
MANATEE COUNTY, FL

CH2MHILL®

PROCESS
AERATION BASINS SECTIONS

VERIFY SCALE
BAR IS ONE INCH ON ORIGINAL DRAWING.
0 1"

DATE	DECEMBER 2013
PROJ	457133
DWG	520-D-3003
SHEET	of

ISSUED FOR BID

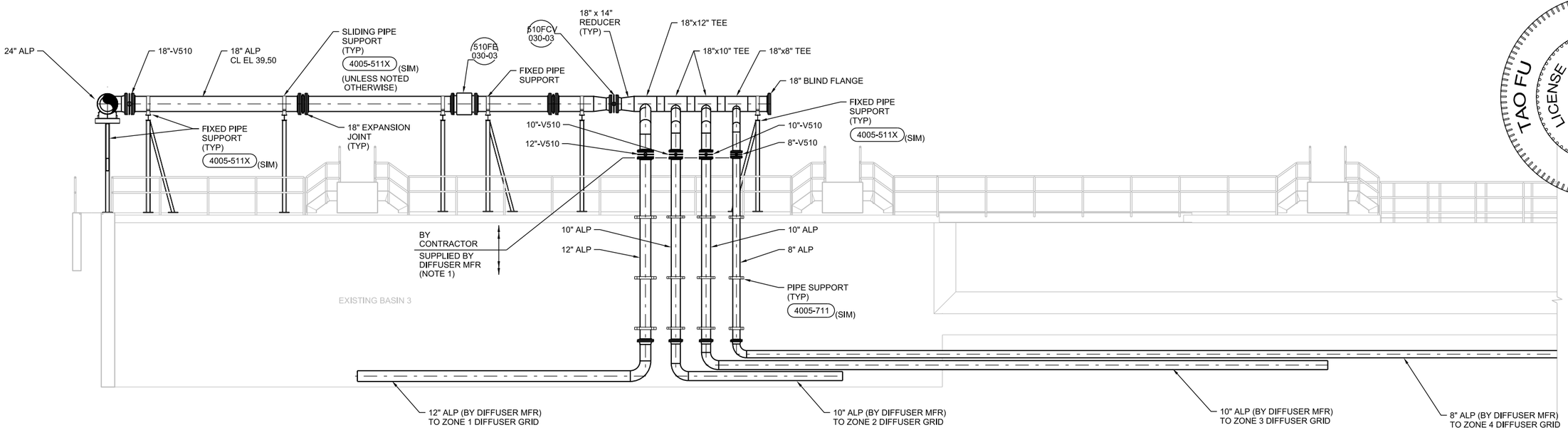

J SECTION
3/16"=1'-0"
520-D-2001

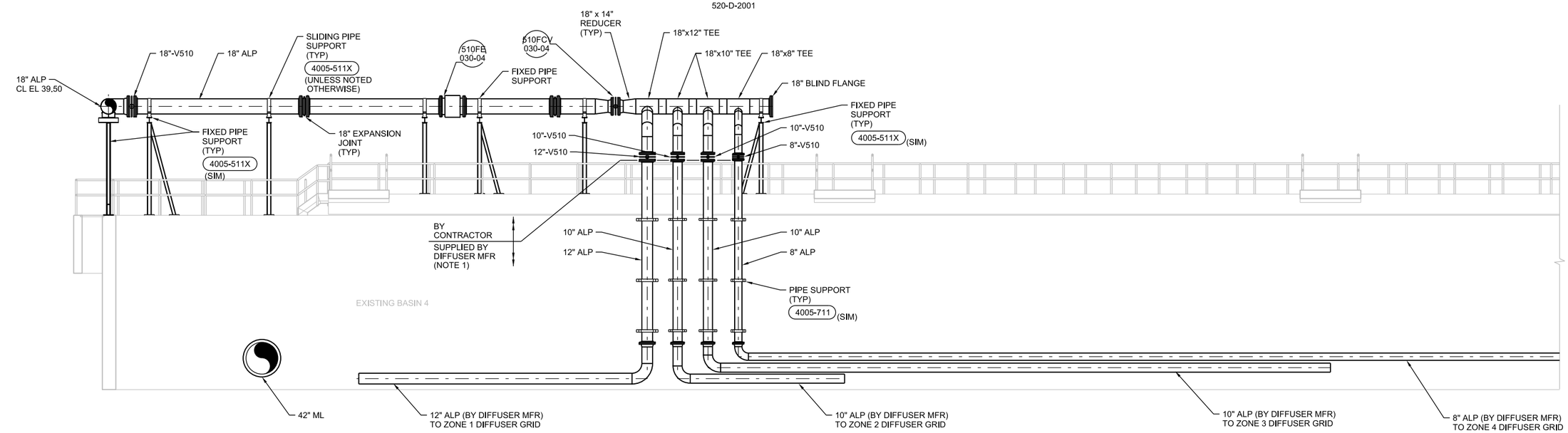

K SECTION
3/16"=1'-0"
520-D-2001

NOTES:

1. DIFFUSER GRIDS ARE NOT SHOWN. THESE SHALL BE INSTALLED BY CONTRACTOR IN ACCORDANCE WITH THE SPECIFICATIONS AND MANUFACTURER'S INSTRUCTIONS.

STATE OF FLORIDA
TAO FU
LICENSE
No 63138
PROFESSIONAL ENGINEER

NO.	DATE	REVISION	DR	CHK	APVD
DSGN			T FU	N PATTERSON	R BOE

3011 SW WILLISTON RD
GAINESVILLE, FL 32608
EB0000072 AAC001992
TAO FU - PE 63138

SWWRF NITROGEN REMOVAL
AND DIGESTER MODIFICATIONS
MANATEE COUNTY UTILITIES
MANATEE COUNTY, FL

CH2MHILL®

PROCESS
AERATION BASINS SECTIONS

VERIFY SCALE
BAR IS ONE INCH ON ORIGINAL DRAWING.
0 1"

DATE	DECEMBER 2013
PROJ	457133
DWG	520-D-3004
SHEET	of

ISSUED FOR BID

REUSE OF DOCUMENTS: THIS DOCUMENT, AND THE IDEAS AND DESIGNS INCORPORATED HEREIN, AS AN INSTRUMENT OF PROFESSIONAL SERVICE, IS THE PROPERTY OF CH2M HILL AND IS NOT TO BE USED, IN WHOLE OR IN PART, FOR ANY OTHER PROJECT WITHOUT THE WRITTEN AUTHORIZATION OF CH2MHILL.
©CH2M HILL 2012. ALL RIGHTS RESERVED.

FILENAME: 520-D-3004_457133.dgn PLOT DATE: 12/13/2013 PLOT TIME: 2:11:35 PM

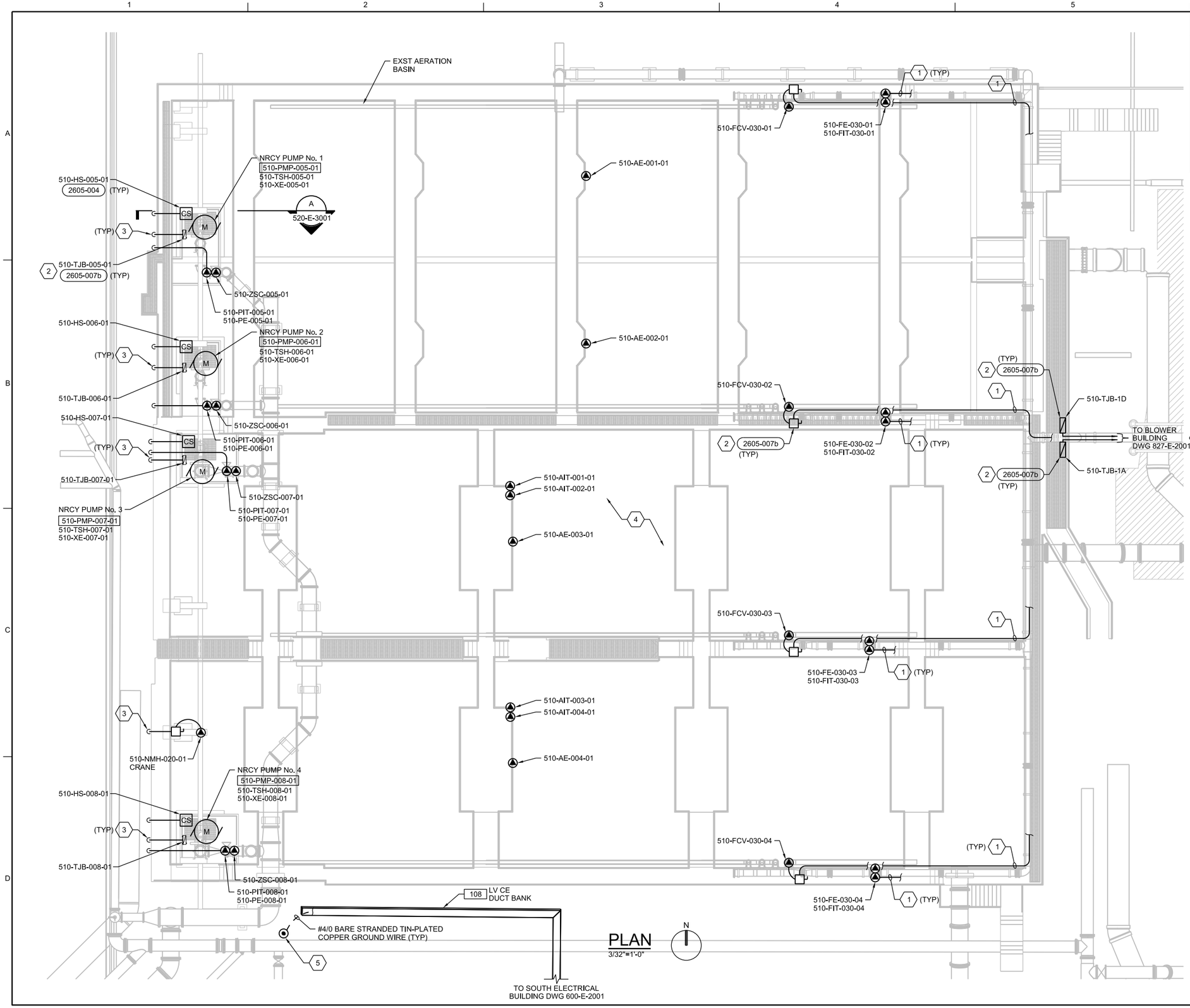

PLAN
3/32"=1'-0"

SHEET KEYNOTES

1. ROUTE CONDUITS BELOW ALP PIPING OR PIPE RACK.
2. MOUNT ON EXST HANDRAIL.
3. REFER TO 520-E-3001 FOR CONDUIT ROUTING REQUIREMENTS.
4. REPAIR EXISTING BASIN POLE LIGHTS AND ASSOCIATED WIRING AS REQUIRED DUE TO DEMOLITION OR CONSTRUCTION ACTIVITIES.
5. GROUND ROD BONDED TO GROUND WIRE ROUTED IN DUCT BANK.

DAVID C NICHOLSON LICENSE No 60201 STATE OF FLORIDA PROFESSIONAL ENGINEER

NO.	DATE	REVISION	BY	APVD

DSGN D NICHOLSON | DR N ADAMS | CHK M WAYNE | APVD D NICHOLSON

3011 SW WILLISTON RD
GAINESVILLE, FL 32608
EB0000072 AAC001992
DAVID C NICHOLSON - PE 60201

SWWRF NITROGEN REMOVAL AND DIGESTER MODIFICATIONS
MANATEE COUNTY UTILITIES
MANATEE COUNTY, FL

CH2MHILL®

ELECTRICAL
AERATION BASIN PLAN

REUSE OF DOCUMENTS: THIS DOCUMENT, AND THE IDEAS AND DESIGNS INCORPORATED HEREIN, AS AN INSTRUMENT OF PROFESSIONAL SERVICE, IS THE PROPERTY OF CH2M HILL AND IS NOT TO BE USED, IN WHOLE OR IN PART, FOR ANY OTHER PROJECT WITHOUT THE WRITTEN AUTHORIZATION OF CH2M HILL.
©CH2M HILL 2012. ALL RIGHTS RESERVED.

VERIFY SCALE
BAR IS ONE INCH ON ORIGINAL DRAWING.
0 1"

DATE	DECEMBER 2013
PROJ	457133
DWG	520-E-2001
SHEET	of

ISSUED FOR BID

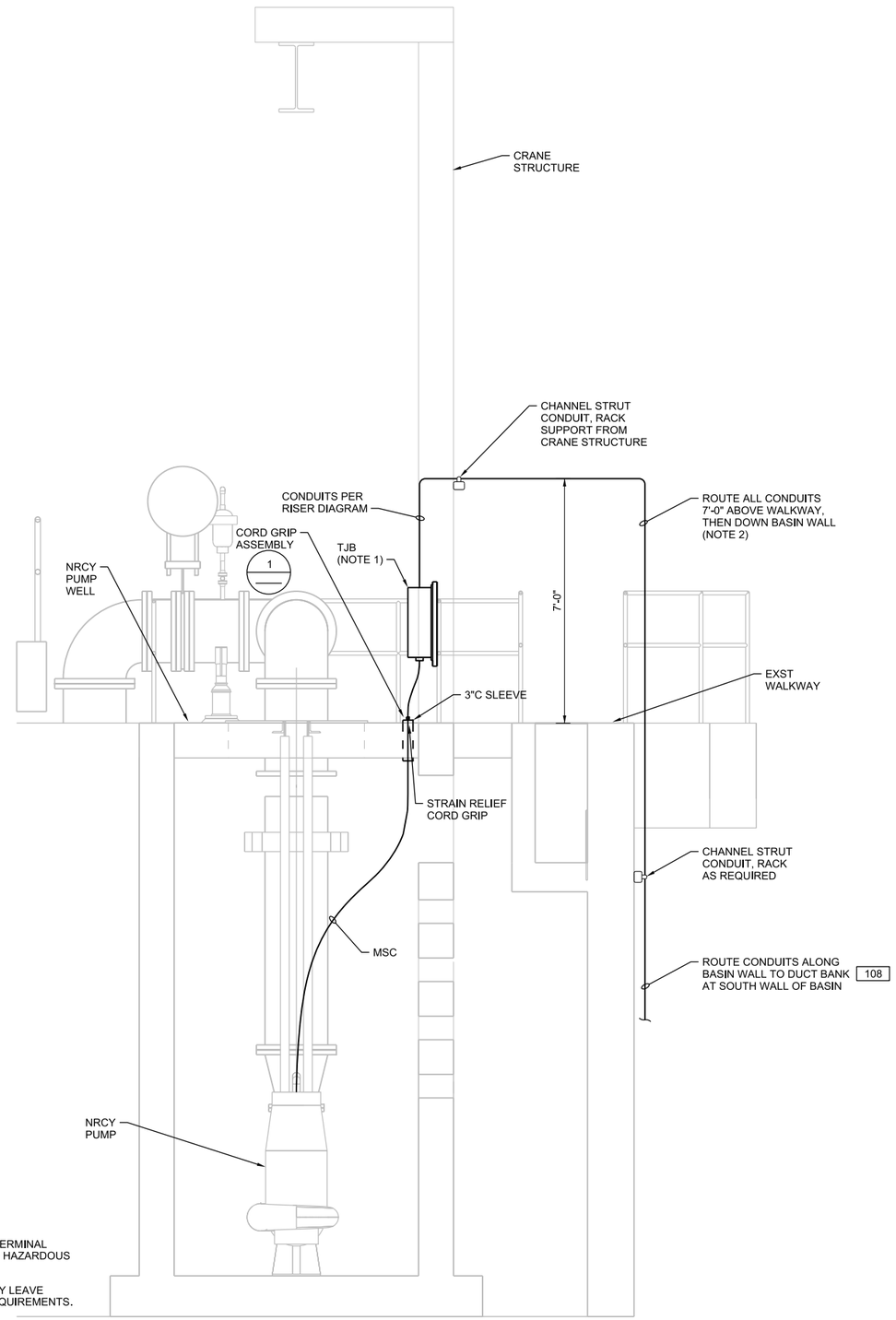

NOTES:

1. NEMA 4X 316 STAINLESS STEEL TERMINAL JUNCTION BOX MOUNTED ABOVE HAZARDOUS AREA, MINIMUM 24 INCHES.
2. SEAL ALL CONDUITS WHERE THEY LEAVE HAZARDOUS AREAS PER NEC REQUIREMENTS.

A SECTION

1/2"=1'-0"

520-E-2001

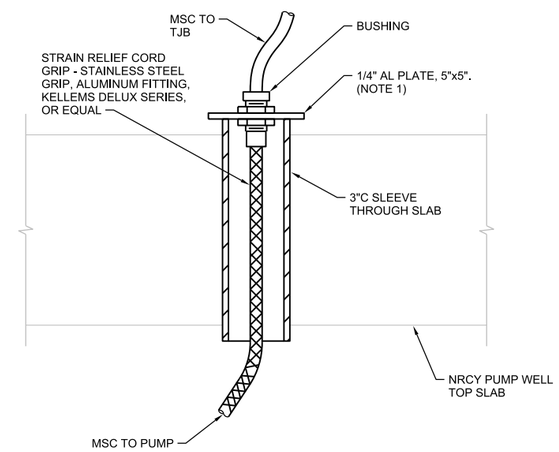

NOTES:

1. INSTALL STRAIN RELIEF CORD GRIP IN ALUMINUM PLATE. ALUMINUM PLATE TO SIT LOOSE ON TOP OF CONDUIT SLEEVE. ADJUST MSC TO RELIEVE STRAIN ON TERMINALS IN TJB.

1 CORD GRIP ASSEMBLY DETAIL

NTS

DAVID C. NICHOLSON ★ LICENSE ★ No 60201 ★ STATE OF FLORIDA ★ PROFESSIONAL ENGINEER

NO.	DATE	REVISION	BY	APVD

DSGN D NICHOLSON | DR N ADAMS | CHK M WAYNE | APVD D NICHOLSON

3011 SW WILLISTON RD
GAINESVILLE, FL 32608
EB0000072 AAC001992
DAVID C NICHOLSON - PE 60201

SWWRF NITROGEN REMOVAL
AND DIGESTER MODIFICATIONS
MANATEE COUNTY UTILITIES
MANATEE COUNTY, FL

CH2MHILL®

ELECTRICAL
AERATION BASIN SECTION

VERIFY SCALE
BAR IS ONE INCH ON ORIGINAL DRAWING.
0 1"

DATE	DECEMBER 2013
PROJ	457133
DWG	520-E-3001
SHEET	of

ISSUED FOR BID

REUSE OF DOCUMENTS: THIS DOCUMENT, AND THE IDEAS AND DESIGNS INCORPORATED HEREIN, AS AN INSTRUMENT OF PROFESSIONAL SERVICE, IS THE PROPERTY OF CH2M HILL AND IS NOT TO BE USED, IN WHOLE OR IN PART, FOR ANY OTHER PROJECT WITHOUT THE WRITTEN AUTHORIZATION OF CH2MHILL.
©CH2M HILL 2012. ALL RIGHTS RESERVED.

FILENAME: 520-E-3001_457133.dgn PLOT DATE: 12/13/2013 PLOT TIME: 1:59:28 PM

SHEET KEYNOTES

1. ROUTE TO THE EXISTING SOUTH ELECTRICAL BUILDLING 600 VIA DUCT BANK [408] AND THE ELECTRICAL DUCT SYSTEM.
2. ROUTE TO THE BLOWER BUILDING [3] AS SHOWN ON 520-E-2001.
3. FIELD ROUTE ALONG EXST WALKWAY TO [4] THEN ROUTE ON ALP PIPE RACK TO BLOWER BUILDING
4. PROVIDE A 1" CONDUIT WITH A BELDEN 9847 MULTI CONDUCTOR COMPUTER CABLE (15 CONDUCTOR, #22 AWG TINNED COPPER CONDUCTOR, 5 MIL PVC INSULATION, OVERALL BELDFOIL (100%) AND TINNED COPPER BRAID SHIELD (65%), WITH PVC JACKET).

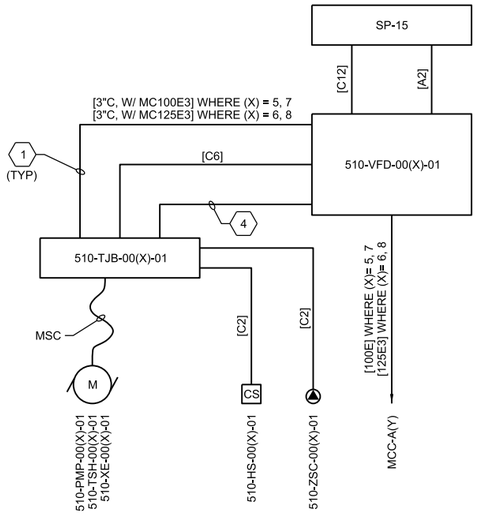

NRCY PUMPS RISER DIAGRAMS

(X)= 5, 7 FOR 45 HP PUMPS
(X)= 6, 8 FOR 60 HP PUMPS
(Y)= 1, 2

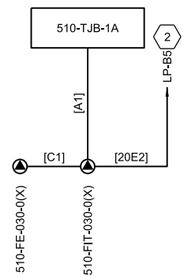

RISER DIAGRAMS

(X) = 1, 2, 3, 4

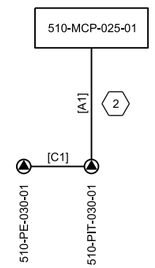

RISER DIAGRAMS

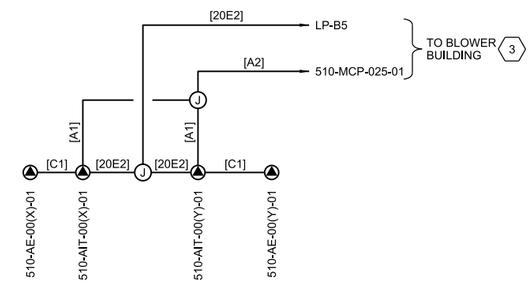

RISER DIAGRAM

DISSOLVED OXYGEN
WHERE (X) = 1, (Y) = 2
WHERE (X) = 3, (Y) = 4

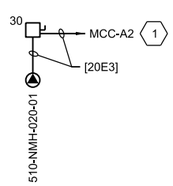

RISER DIAGRAM

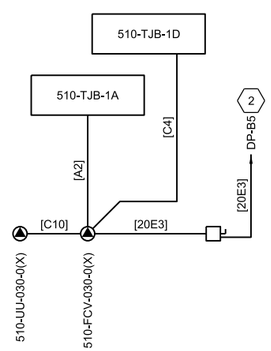

RISER DIAGRAMS

(X) = 1, 2, 3, 4

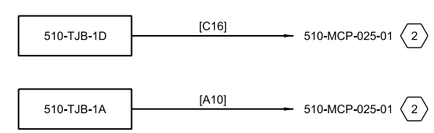

RISER DIAGRAMS

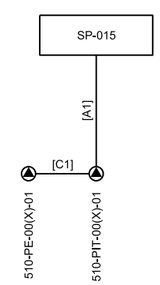

RISER DIAGRAM

(X)= 5, 6, 7, 8

NO.	DATE	REVISION	BY	APVD

DSGN D NICHOLSON | DR N ADAMS | CHK M WAYNE | APVD D NICHOLSON

STATE OF FLORIDA PROFESSIONAL ENGINEER DAVID C NICHOLSON No 60201

REUSE OF DOCUMENTS: THIS DOCUMENT, AND THE IDEAS AND DESIGNS INCORPORATED HEREIN, AS AN INSTRUMENT OF PROFESSIONAL SERVICE, IS THE PROPERTY OF CH2M HILL AND IS NOT TO BE USED, IN WHOLE OR IN PART, FOR ANY OTHER PROJECT WITHOUT THE WRITTEN AUTHORIZATION OF CH2M HILL.
©CH2M HILL 2012. ALL RIGHTS RESERVED.

3011 SW WILLISTON RD
GAINESVILLE, FL 32608
EB0000072 AAC001992
DAVID C NICHOLSON - PE 60201

SWWRF NITROGEN REMOVAL
AND DIGESTER MODIFICATIONS
MANATEE COUNTY UTILITIES
MANATEE COUNTY, FL

CH2MHILL®

ELECTRICAL
AERATION BASIN
RISER DIAGRAMS

VERIFY SCALE
BAR IS ONE INCH ON ORIGINAL DRAWING.
0 1"

DATE	DECEMBER 2013
PROJ	457133
DWG	520-E-6001
SHEET	of

ISSUED FOR BID

FILENAME: 520-E-6001_457133.dgn PLOT DATE: 12/13/2013 PLOT TIME: 1:59:33 PM

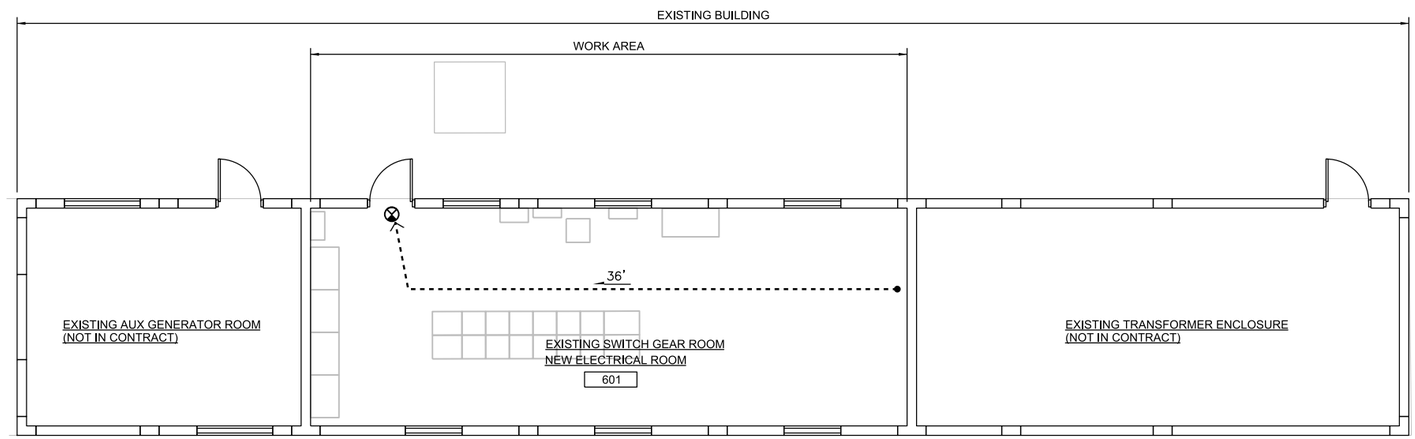

LIFE SAFETY FLOOR PLAN

3/16"=1'-0"

N

LIFE SAFETY PLAN LEGEND:

X' TRAVEL DISTANCE TO EXIT = 30 FEET

ONE SIDED EXIT LIGHTING (EXISTING)

NOTE: EXISTING FIRE EXTIGUISHERS ARE TO REMAIN.

PLUMBING

NO TOILET FACILITIES INCLUDING POTABLE DRINKING WATER ARE PROVIDED. SCALEHOUSE FACILITY IS WITHIN 500 FEET.

FIRE SEPARATION REQUIREMENTS

ACTUAL FIRE SEPARATION DISTANCE (TABLE 602)	20 FT OR GREATER	0 HR
DISTANCE FROM ADJACENT BUILDING OR PROPERTY LINE	20 FT OR GREATER	0 HR

FIRE PROTECTION

SPRINKLERS	NOT REQUIRED
FIRE EXTINGUISHERS	EXISTING
EXIT LIGHTING	EXISTING

APPLICABLE CODES

2010 FLORIDA BUILDING CODE
2010 FLORIDA EXISTING BUILDING CODE
2010 FLORIDA PLUMBING CODE
2010 FLORIDA MECHANICAL CODE
2010 FLORIDA FIRE PREVENTION CODE
NATIONAL ELECTRICAL CODE

DESCRIPTION

THIS EXISTING MASONRY BUILDING, CURRENTLY UNUSED IS REACTIVATED INTO USE AS THE SOUTH ELECTRICAL BUILDING.

EXISTING BUILDING CODE

CLASSIFICATION OF WORK	ALTERATION LEVEL 1

PROJECT CODE DATA 2012 FBC

BUILDING: SOUTH ELECTRICAL BUILDING

GENERAL INFORMATION

USE AND OCCUPANCY CLASSIFICATION	ASSUMED F-1 OR UTILITY
CONSTRUCTION CLASSIFICATION	ASSUMED TYPE VB UNPROTECTED

AREA AND HEIGHT LIMITATIONS

MAXIMUM ALLOWABLE AREA (TABLE 503)	8,500 SF
ACTUAL AREA: (TOTAL EXISTING BUILDING)	1,633'-4" SF
ACTUAL PER FLOOR: (TOTAL AFFECTED SF)	685.5 SF AFFECTED AREA
MAXIMUM ALLOWABLE STORIES:	1
ACTUAL NUMBER OF STORIES:	1
MAXIMUM ALLOWABLE HEIGHT:	40 FT
ACTUAL HEIGHT:	13'-4"

OCCUPANCY / EGRESS INFORMATION

DESIGN OCCUPANCY (TABLE 1004.1.1)	3 PERSONS
ACTUAL NUMBER OF OCCUPANTS	3 MAXIMUM
EGRESS WIDTH BASED ON OCCUPANCY (TABLE 1005.1)	36" PROVIDED
ALLOWABLE DEAD END LENGTH (SECTION 1018.4)	20 FT
NUMBER OF EXITS (SECTION 1021.2)	2
NUMBER OF EXITS (SECTION 1015.1)	75 FT 1 MEANS OF EGRESS
ALLOWABLE COMMON PATH OF TRAVEL (SECTION 1014.3)	75 FEET
MAX TRAVEL DISTANCE ALLOWED (SECTION 1016.1)	200 FEET

REQUIRED FIRE RESISTANT RATINGS

BUILDING ELEMENTS (TABLE 601)	VB
STRUCTURAL FRAME	0 HR
EXTERIOR BEARING WALLS	0 HR
INTERIOR BEARING WALLS	0 HR
INTERIOR NON-BEARING WALLS	0 HR
FLOOR CONSTRUCTION	0 HR
ROOF CONSTRUCTION	0 HR
SHAFT ENCLOSURE (707.4)	N/A
STAIRWAY ENCLOSURE (1019.1)	N/A
CORRIDOR (TABLE 1016.1)	N/A
OCCUPANCY SEPARATION (302.3.2)	N/A
INCIDENTAL USE AREAS (302.1.1)	N/A

NO.	DATE	REVISION	BY	APVD

DSGN	DR	CHK	APVD
A COULLIAS	A COULLIAS	A DOLSAK	B TRAUTWEIN

3011 SW WILLISTON RD
GAINESVILLE, FL 32608
EB0000072 AAC001992
BETH TRAUTWEIN - AR 91388

SWWRF NITROGEN REMOVAL
AND DIGESTER MODIFICATIONS
MANATEE COUNTY UTILITIES
MANATEE COUNTY, FL

CH2MHILL®

ARCHITECTURAL
EXISTING SOUTH
ELECTRICAL BUILDING
LIFE SAFETY PLAN

REUSE OF DOCUMENTS: THIS DOCUMENT, AND THE IDEAS AND DESIGNS INCORPORATED HEREIN, AS AN INSTRUMENT OF PROFESSIONAL SERVICE, IS THE PROPERTY OF CH2M HILL AND IS NOT TO BE USED, IN WHOLE OR IN PART, FOR ANY OTHER PROJECT WITHOUT THE WRITTEN AUTHORIZATION OF CH2MHILL.
©CH2M HILL 2012. ALL RIGHTS RESERVED.

VERIFY SCALE
BAR IS ONE INCH ON ORIGINAL DRAWING.
0 1"

DATE	APRIL 2014
PROJ	457133
DWG	600-A-0001
SHEET	of

ISSUED FOR BID

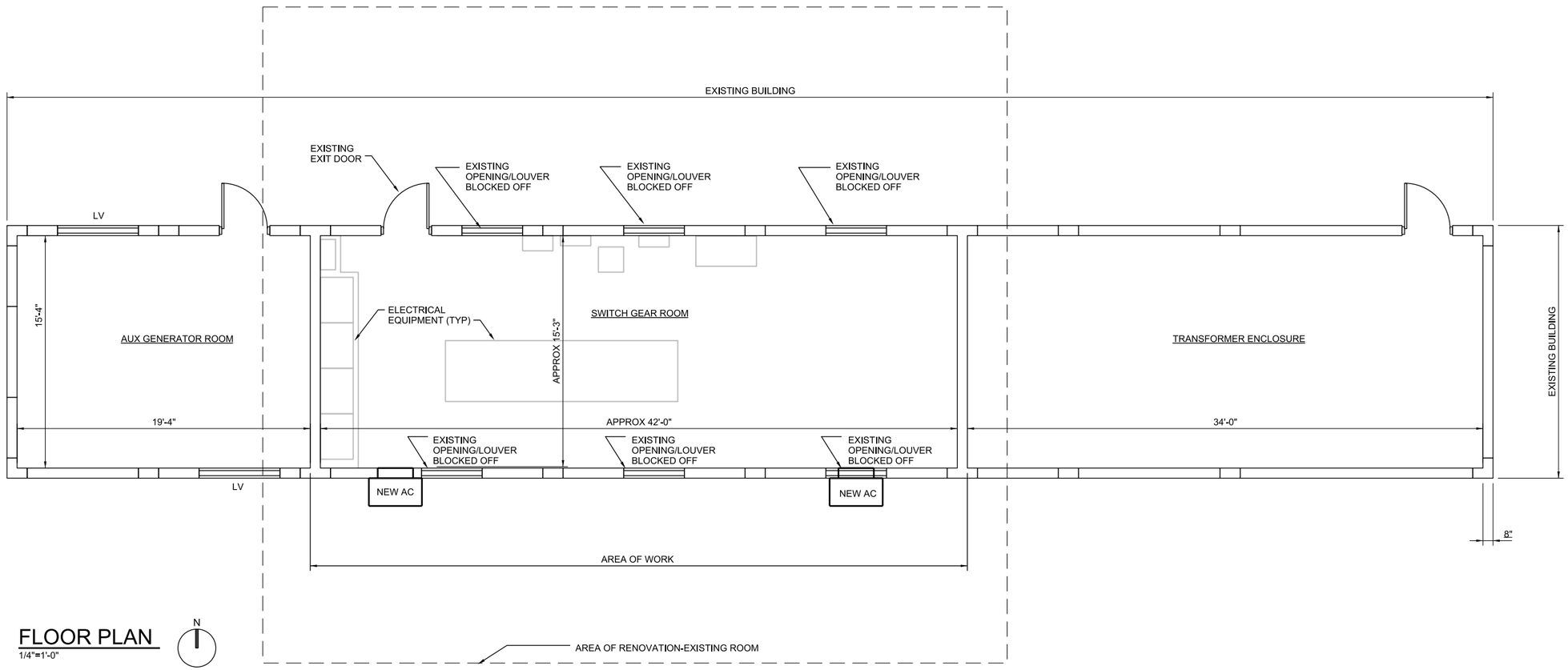

FLOOR PLAN

1/4"=1'-0"

GENERAL NOTES

1. EXISTING WALL OPENINGS IN THE ROOM HAVE BEEN CLOSED PRIOR IN THE AREA OF RENOVATION.

NO.	DATE	REVISION	BY	APVD

DSGN A COULLIAS | DR A COULLIAS | CHK A DOLSAK | APVD B TRAUTWEIN

REUSE OF DOCUMENTS: THIS DOCUMENT, AND THE IDEAS AND DESIGNS INCORPORATED HEREIN, AS AN INSTRUMENT OF PROFESSIONAL SERVICE, IS THE PROPERTY OF CH2M HILL AND IS NOT TO BE USED, IN WHOLE OR IN PART, FOR ANY OTHER PROJECT WITHOUT THE WRITTEN AUTHORIZATION OF CH2MHILL.
©CH2M HILL 2012. ALL RIGHTS RESERVED.

3011 SW WILLISTON RD
GAINESVILLE, FL 32608
EB0000072 AAC001992
BETH TRAUTWEIN - AR 91388

SWWRF NITROGEN REMOVAL
AND DIGESTER MODIFICATIONS
MANATEE COUNTY UTILITIES
MANATEE COUNTY, FL

CH2MHILL®

ARCHITECTURAL
EXISTING SOUTH ELECTRICAL BUILDING FLOOR PLAN

VERIFY SCALE
BAR IS ONE INCH ON ORIGINAL DRAWING.
0 1"

DATE	APRIL 2014
PROJ	457133
DWG	600-A-2001
SHEET	of

ISSUED FOR BID

FILENAME: 600-A-2001_457133.dgn PLOT DATE: 5/9/2014 PLOT TIME: 3:34:48 PM

GENERAL NOTES:

1. CONTRACTOR SHALL INSPECT SITE TO BECOME FAMILIAR WITH THE SCOPE OF THE WORK. THESE DOCUMENTS DO NOT REFLECT AS-BUILT CONDITIONS. ANY DISCREPANCIES BETWEEN THESE DOCUMENTS AND THE ACTUAL CONDITIONS SHALL BE REPORTED TO THE ENGINEER FOR RESOLUTION.
2. MECHANICAL WORK SHALL COMPLY WITH ALL APPLICABLE CODES. VERIFY ALL REQUIREMENTS PRIOR TO COMMENCING WORK.
3. COORDINATE THERMOSTAT LOCATIONS WITH EXISTING CONDITIONS AND THE ARCHITECT/ENGINEER PRIOR TO INSTALLATION.
4. THE UNIT SHALL BE SECURE BY WALL MOUNTING BRACKETS WHICH SECURE THE UNIT TO THE OUTSIDE WALL SURFACE AT BOTH SIDES. A BOTTOM MOUNTING BRACKET IS PROVIDED FOR EASE INSTALLATION, BUT IS NOT REQUIRED.
5. A BEAD OF SILICONE CAULKING SHALL BE PLACED BEHIND THE SIDE MOUNTING FLANGES AND UNDER TOP FLASHING AT TIME OF INSTALLATION.
6. SECURE UNIT WITH 5/16 LAG BOLTS; USE 7/8 INCH DIAMETER FLAT WASHERS ON THE LAG BOLTS.
7. INSTALL WORK SO AS TO BE READILY ACCESSIBLE FOR OPERATION, MAITENANCE AND REPAIR. MINOR DEVIATIONS FROM DRAWINGS MAY BE MADE TO ACCOMPLISH THIS. BUT CHANGES WHICH INVOLVE EXTRA COST SHALL NOT BE MADE WITHOUT APPROVAL.
8. DISCONNECT, REMOVE AND/OR RELOCATE EXISTING MATERIAL, EQUIPMENT AND OTHER WORK AS NOTED OR REQUIRED FOR PROPER INSTALLATION OF THE NEW SYSTEM.
9. ALL SYSTEMS SHALL BE CLEAN OF FOREIGN MATERIAL AND ROUGH SPOTS PRIOR TO BEING PLACED IN SERVICE AND BEFORE OPERATIONAL TEST ARE PERFORMED.
10. INSTALLATION OF ALL EQUIPMENTS AND THEIR ACCESSORIES SHALL BE PER MANUFACTURER'S PUBLISHED RECOMMENDATIONS.
11. ALL MATERIALS AND EQUIPMENT TO BE NEW UNLESS OTHERWISE NOTED..

SEQUENCE OF OPERATION

GENERAL:
THE UNITS WILL BE CONTROLLED VIA WALL MOUNTED THERMOSTAT
OPERATION/SETPOINTS:

FIRST STAGE COOLING SETPOINT (85 F ADJ):
ON A CALL FOR FIRST STAGE COOLING, THE BLOWER OF THE UNIT IS ENERGIZED AND THE COMPRESSOR WILL OPERATE AT LOW CAPACITY.

SECOND STAGE COOLING SETPOINT (87 F ADJ):
ON A CALL FOR SECOND STAGE COOLING, THE COMPRESSOR WILL OPERATRE AT HIGH CAPACITY.
AS THE SPACE TEMPERATURE SETPOINTS ARE SATISFIED, THE UNIT IS DE-ENERGIZED.

WHEN THE TEMPERATURE IN THE ELECTRICAL ROOM IS UNDER THE HEATING SETPOINT TEMPERATURE (60 F ADJ), THE ELECTRIC UNIT HEATER SHALL ENERGIZE. AS THE TEMPERATURE SETPOINT IS SATISFIED THE HEATER SHALL BE DE-ENERGIZED.

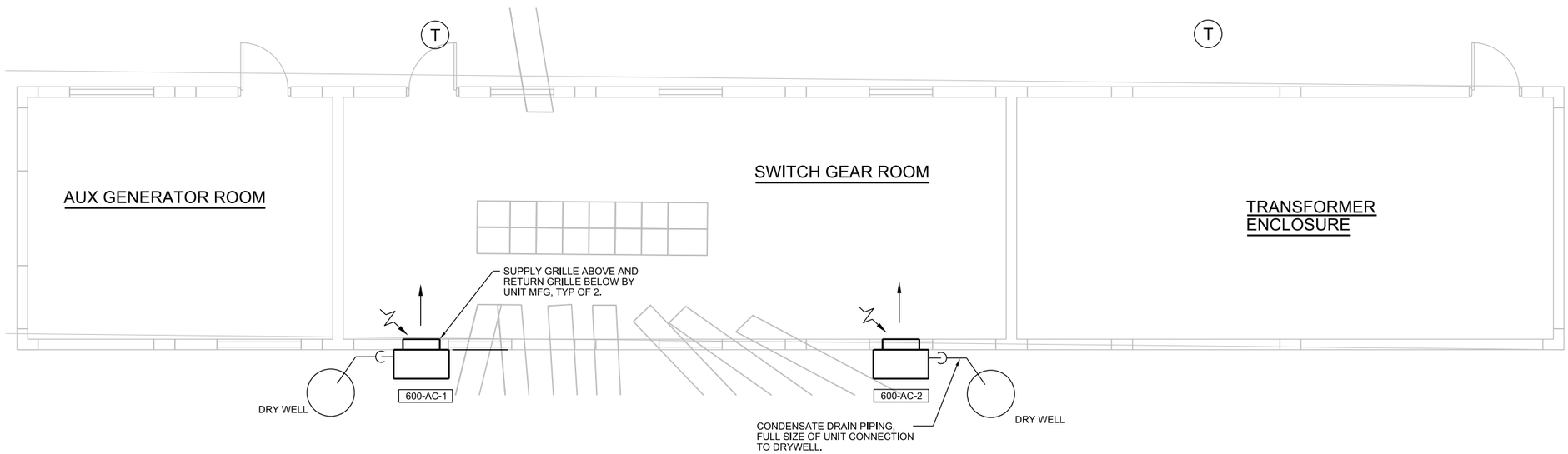

N

FLOOR PLAN
1/4"=1'-0"

WALL MOUNT AIR CONDITIONER

23 81 00.08

SYMBOL	LOCATION	INDOOR FAN DATA						DX COOLING DATA				ELECTRIC HEATING DATA				COMPRESSOR DATA						CONDENSER FAN DATA					UNIT ELECTRICAL DATA					UNIT DIMENSIONS				MANUFACTURER	MODEL	REMARKS
		SUPPLY AIR CFM	OUTSIDE AIR CFM	EXTERNAL STATIC P IN W.G.	HP	VOLT	PH	TOTAL BTU/H	EAT DEG. F DB	EAT DEG. F WB	AMBIENT TEMP. DEG. F	kW	STEPS	VOLT	PH	NO.	STEPS	RLA (EA)	LRA (EA)	VOLT	PH	NO.	H.P. (EA)	VOLT	PH	CFM (TOTAL)	#CONN.	MCA	MOCP (FUSE)	VOLT	PH	INCHES H	INCHES W	INCHES D	MAX WEIGHT LBS			
600-AC-1	SOUTH ELECTRICAL BUILDING	1100	0	0.25	1/2	460	3	35,400	80	49	92	6	1	460	3	1	2	3.6	38.0	460	3	1	1/3	460	3	2700	1	13.5	15	460	3	84.8	42	22.4	530	BARD	WA3S3C6BPX	A,B,C,D,E,F,G,H,I,J
600-AC-2	SOUTH ELECTRICAL BUILDING	1100	0	0.25	1/2	460	3	35,400	80	49	92	6	1	460	3	1	2	3.6	38.0	460	3	1	1/3	460	3	2700	1	13.5	15	460	3	84.8	42	22.4	530	BARD	WA3S3C6BPX	A,B,C,D,E,F,G,H,I,J

REMARKS:

A: CONDENSER COIL SHALL HAVE DIP APPLIED ANTI-CORROSION COATING (NOT SPRAY APPLIED)
B: 2 INCH DEEP PLEATED AIR FILTER SIZED TO SUIT RETURN GRILLE
C: FACTORY INSTALLED DISCONNECT
E: COLD WEATHER KIT
F: 5 YEAR COMPRESSOR WARRANTY
G: STANDARD RETURN AIR GRILLE
H: STANDARD SUPPLY AIR GRILLE
I: BLANK OFF PLATE TO RESTRICT ANY OSA.
J: FIELD INSTALLED HEATER PACKAGE MODEL EHWA5S-C06(6 KW)

ABEL VALIENTE LICENSE No 70128 STATE OF FLORIDA PROFESSIONAL ENGINEER

NO.	DATE	REVISION	BY	APVD

DSGN A VALIENTE | DR K RINER | CHK G SMARR | APVD A VALIENTE

©CH2M HILL 2012. ALL RIGHTS RESERVED.

3011 SW WILLISTON RD
GAINESVILLE, FL 32608
EB0000072 AAC001992
ABEL VALIENTE - PE 70128

SWWRF NITROGEN REMOVAL AND DIGESTER MODIFICATIONS
MANATEE COUNTY UTILITIES
MANATEE COUNTY, FL

REUSE OF DOCUMENTS: THIS DOCUMENT, AND THE IDEAS AND DESIGNS INCORPORATED HEREIN, AS AN INSTRUMENT OF PROFESSIONAL SERVICE IS THE PROPERTY OF CH2M HILL AND IS NOT TO BE USED, IN WHOLE OR IN PART, FOR ANY OTHER PROJECT WITHOUT THE WRITTEN AUTHORIZATION OF CH2M HILL.

CH2MHILL®

BUILDING MECHANICAL
EXISTING SOUTH ELECTRICAL BUILDING FLOOR PLAN

VERIFY SCALE
BAR IS ONE INCH ON ORIGINAL DRAWING.
0 1"

DATE	DECEMBER 2013
PROJ	457133
DWG	600-M-2001
SHEET	of

ISSUED FOR BID

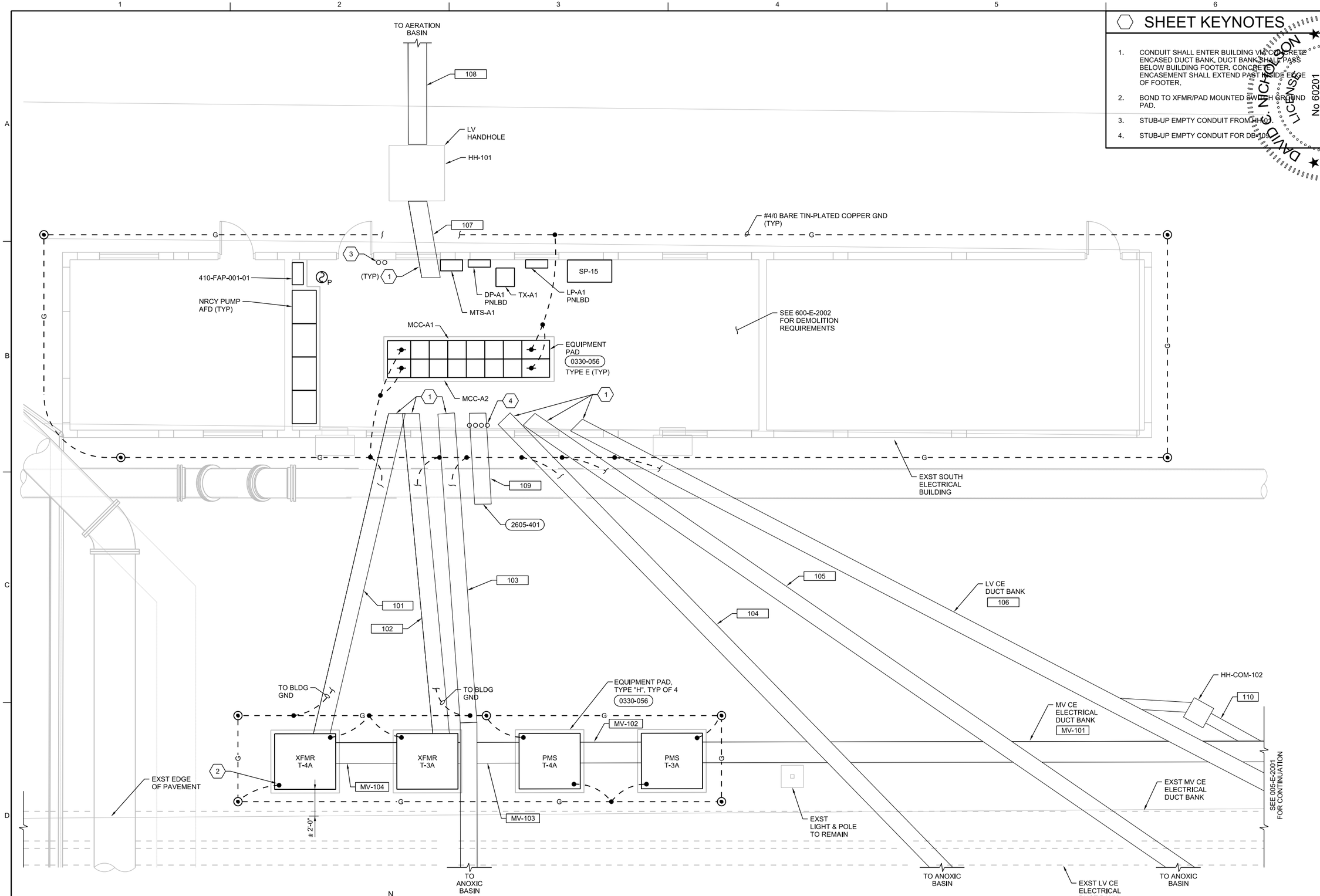

SOUTH ELECTRICAL BUILDING PLAN

1/4" = 1'-0"

SHEET KEYNOTES

1. CONDUIT SHALL ENTER BUILDING VIA CONCRETE ENCASED DUCT BANK. DUCT BANK SHALL PASS BELOW BUILDING FOOTER. CONCRETE ENCASEMENT SHALL EXTEND PAST INSIDE EDGE OF FOOTER.
2. BOND TO XFMR/PAD MOUNTED SWITCH GROUND PAD.
3. STUB-UP EMPTY CONDUIT FROM HH-101.
4. STUB-UP EMPTY CONDUIT FOR DB-109.

DAVID C. NICHOLSON LICENSED PROFESSIONAL ENGINEER No 60201 STATE OF FLORIDA

NO.	DATE	REVISION	BY	APVD

DSGN N ADAMS | DR N ADAMS | CHK M WAYNE | APVD D NICHOLSON

REUSE OF DOCUMENTS: THIS DOCUMENT, AND THE IDEAS AND DESIGNS INCORPORATED HEREIN, AS AN INSTRUMENT OF PROFESSIONAL SERVICE, IS THE PROPERTY OF CH2M HILL AND IS NOT TO BE USED, IN WHOLE OR IN PART, FOR ANY OTHER PROJECT WITHOUT THE WRITTEN AUTHORIZATION OF CH2M HILL.

©CH2M HILL 2012. ALL RIGHTS RESERVED.

3011 SW WILLISTON RD
GAINESVILLE, FL 32608
EB0000072 AAC001992
DAVID C NICHOLSON - PE 60201

SWWRF NITROGEN REMOVAL AND DIGESTER MODIFICATIONS
MANATEE COUNTY UTILITIES
MANATEE COUNTY, FL

CH2MHILL®

ELECTRICAL
EXISTING SOUTH ELECTRICAL BLDG MODIFICATIONS PLAN

VERIFY SCALE
BAR IS ONE INCH ON ORIGINAL DRAWING.
0 1"

DATE	APRIL 2014
PROJ	457133
DWG	600-E-2001
SHEET	of

ISSUED FOR BID

SHEET KEYNOTES

1. STEM MOUNT LIGHTS TO 9'-6" AFF.
2. LIGHTS WITH EMERGENCY LIGHTING BATTERY PACKS TO ILLUMINATE ON POWER FAILURE REGARDLESS OF LIGHT SWITCH POSITIONS. PROVIDE UNSWITCHED PHASE CONDUCTOR.
3. PROVIDE [20E2] WIRING FOR LIGHTS AND 120V RECEPTACLES. POWER FROM PANELBOARD LP-A1 CIRCUIT AS INDICATED.
4. EXISTING LIGHTING SYSTEM TO BE REMOVED COMPLETELY.
5. EXIT LIGHT TO BE UNSWITCHED AND WIRE TO THE LINE SIDE OF THE NORMAL LIGHTING CIRCUIT.

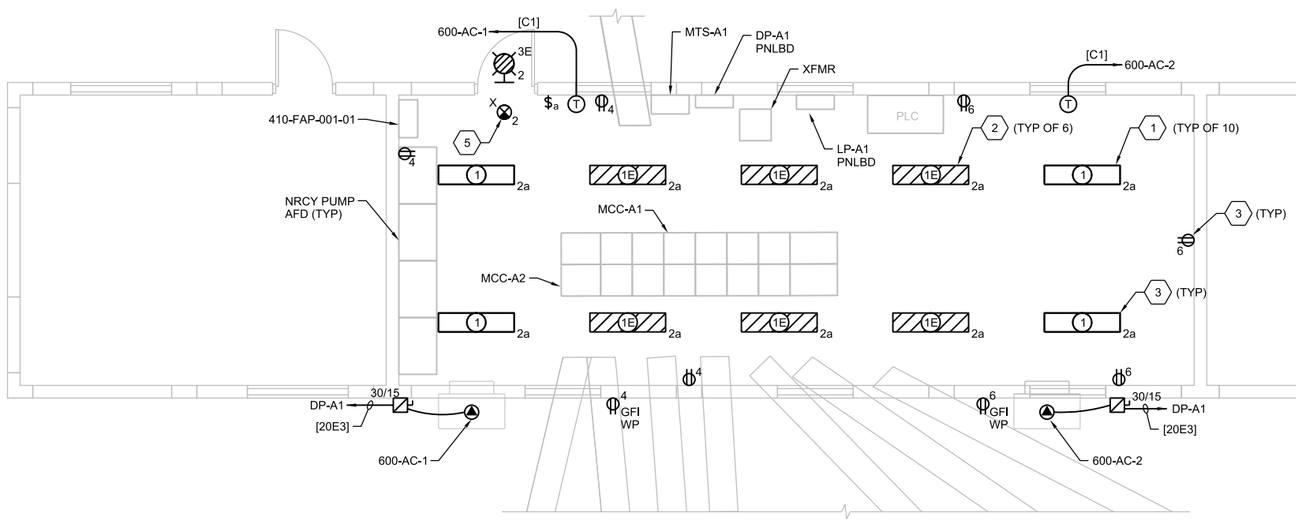

N

LIGHTING AND FACILITIES PLAN PLAN

1/4" = 1'-0"

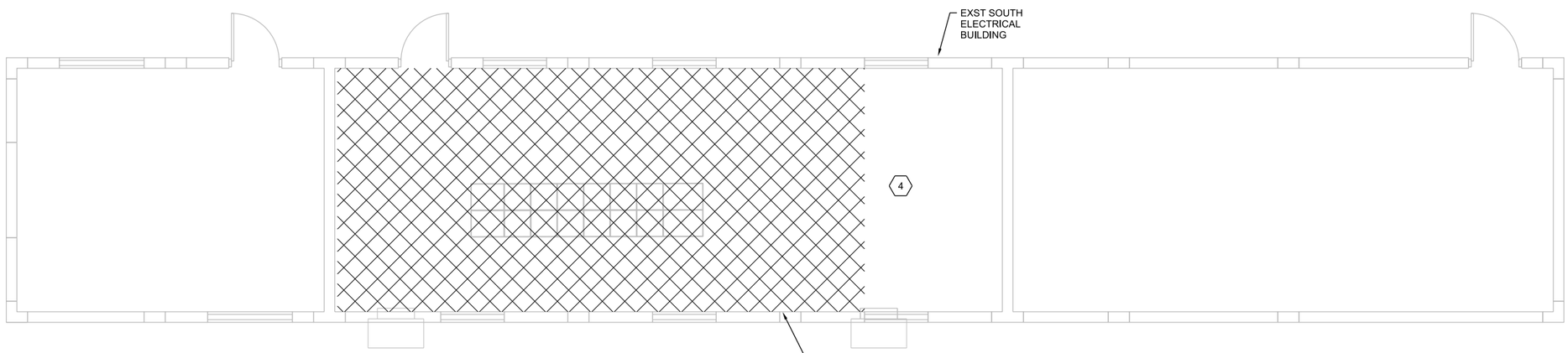

N

DEMOLITION PLAN

1/4" = 1'-0"

STATE OF FLORIDA PROFESSIONAL ENGINEER DAVID C NICHOLSON No 60201

NO.	DATE	REVISION	BY	APVD

DSGN	N ADAMS	DR	N ADAMS	CHK	M WAYNE	APVD	D NICHOLSON

©CH2M HILL 2012. ALL RIGHTS RESERVED.

3011 SW WILLISTON RD
GAINESVILLE, FL 32608
EB0000072 AAC001992
DAVID C NICHOLSON - PE 60201

SWWRF NITROGEN REMOVAL
AND DIGESTER MODIFICATIONS
MANATEE COUNTY UTILITIES
MANATEE COUNTY, FL

REUSE OF DOCUMENTS: THIS DOCUMENT, AND THE IDEAS AND DESIGNS INCORPORATED HEREIN, AS AN INSTRUMENT OF PROFESSIONAL SERVICE IS THE PROPERTY OF CH2M HILL AND IS NOT TO BE USED IN WHOLE OR IN PART, FOR ANY OTHER PROJECT WITHOUT THE WRITTEN AUTHORIZATION OF CH2MHILL.

CH2MHILL®

ELECTRICAL

EXISTING SOUTH ELECTRICAL BLDG LIGHTING AND FACILITES PLAN, AND DEMOLITION PLAN

VERIFY SCALE
BAR IS ONE INCH ON ORIGINAL DRAWING.
0 1"

DATE	APRIL 2014
PROJ	457133
DWG	600-E-2002
SHEET	of

ISSUED FOR BID

SHEET KEYNOTES

1. SERVICE ENTRANCE LABELED.
2. SIZE BY MANUFACTURER.
3. REFER TO MCC FRONT ELEVATION FOR SPACE CIRCUIT BREAKERS AND STARTER REQUIREMENTS.
4. PROVIDE PROVISIONS FOR FUTURE BUS EXPANSION.

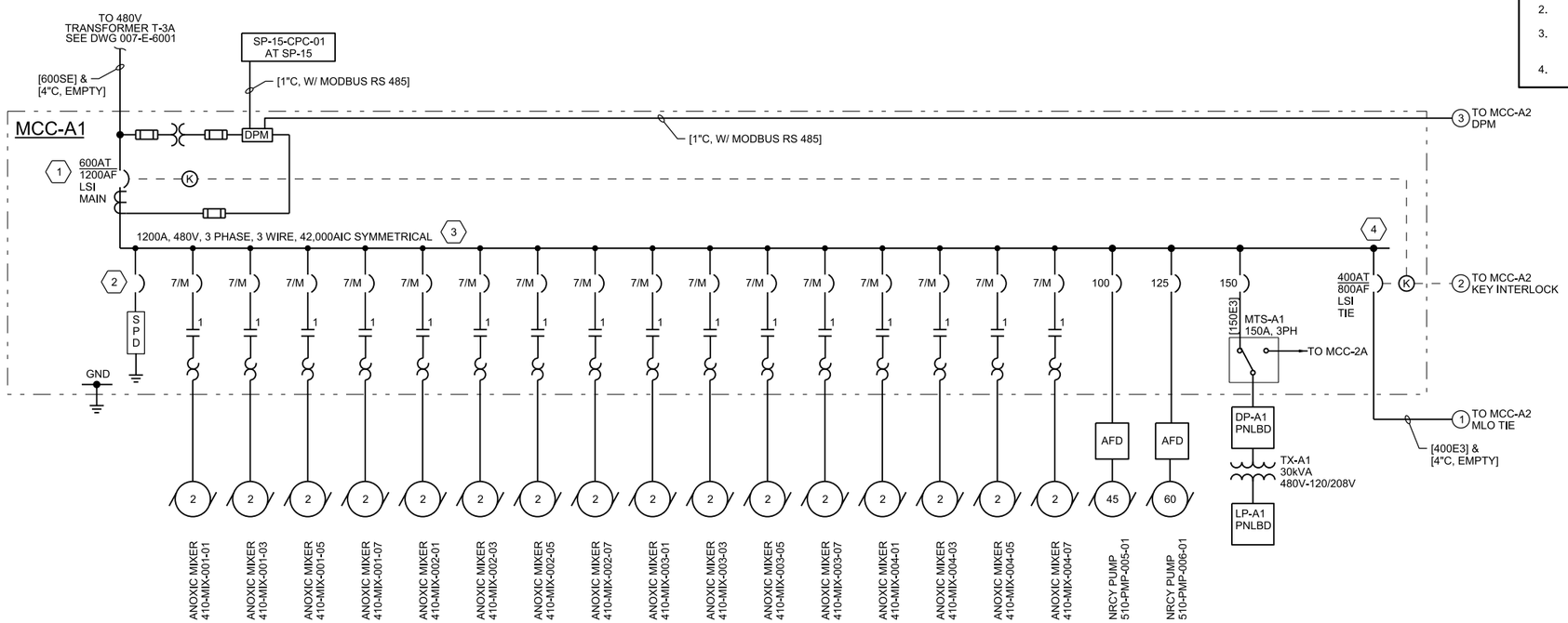

MCC-A1 ONE-LINE DIAGRAM

NTS

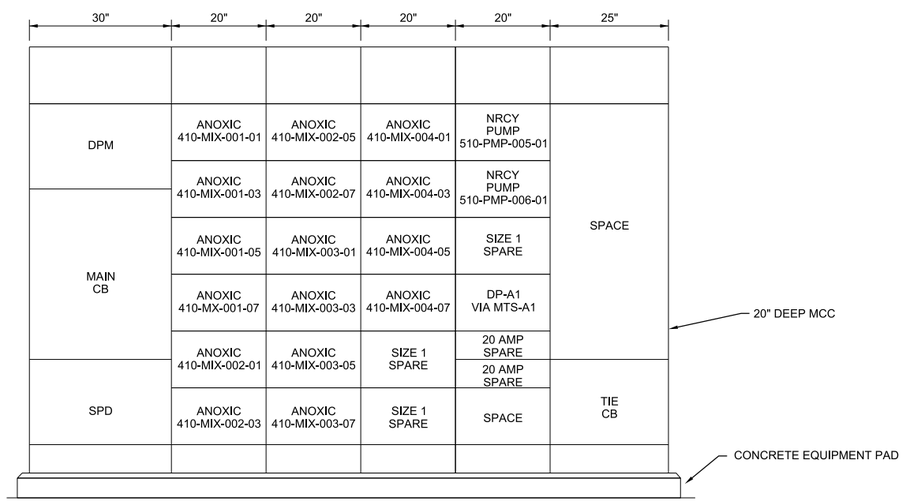

3 MCC-A1 FRONT ELEVATION

NTS

MCC-A1 CONNECTED LOAD

DESCRIPTION	AMPS
410-MIX-001-01	3.4
410-MIX-001-03	3.4
410-MIX-001-05	3.4
410-MIX-001-07	3.4
410-MIX-002-01	3.4
410-MIX-002-03	3.4
410-MIX-002-05	3.4
410-MIX-002-07	3.4
410-MIX-003-01	3.4
410-MIX-003-03	3.4
410-MIX-003-05	3.4
410-MIX-003-07	3.4
410-MIX-040-01	3.4
410-MIX-004-03	3.4
410-MIX-004-05	3.4
410-MIX-004-07	3.4
510-PMP-005-01	50.0
510-PMP-006-01	77.0
DP-A1	57.7
TOTALS	249.1
TOTAL PLUS 25% OF LARGER MOTOR	268.35

DAVID C NICHOLSON LICENSE No 60201 STATE OF FLORIDA PROFESSIONAL ENGINEER

NO.	DATE	REVISION	BY	APVD

DSGN N ADAMS | DR N ADAMS | CHK M WAYNE | APVD D NICHOLSON

REUSE OF DOCUMENTS: THIS DOCUMENT, AND THE IDEAS AND DESIGNS INCORPORATED HEREIN, AS AN INSTRUMENT OF PROFESSIONAL SERVICE, IS THE PROPERTY OF CH2M HILL AND IS NOT TO BE USED, IN WHOLE OR IN PART, FOR ANY OTHER PROJECT WITHOUT THE WRITTEN AUTHORIZATION OF CH2MHILL.

©CH2M HILL 2012. ALL RIGHTS RESERVED.

3011 SW WILLISTON RD
GAINESVILLE, FL 32608
EB0000072 AAC001992
DAVID C NICHOLSON - PE 60201

SWWRF NITROGEN REMOVAL AND DIGESTER MODIFICATIONS
MANATEE COUNTY UTILITIES
MANATEE COUNTY, FL

CH2MHILL®

ELECTRICAL

EXISTING SOUTH ELECTRICAL BLDG MCC-A1 ONE LINE DIAGRAM AND FRONT ELEVATION

VERIFY SCALE
BAR IS ONE INCH ON ORIGINAL DRAWING.
0 1"

DATE	DECEMBER 2013
PROJ	457133
DWG	600-E-6001
SHEET	of

ISSUED FOR BID

FILENAME: 600-E-6001_457133.dgn PLOT DATE: 12/13/2013 PLOT TIME: 1:59:14 PM

SHEET KEYNOTES

1. SERVICE ENTRANCE LABELED.
2. SIZE BY MANUFACTURER.
3. REFER TO MCC FRONT ELEVATION FOR SPACE CIRCUIT BREAKERS AND STARTER REQUIREMENTS.
4. PROVIDE PROVISIONS FOR FUTURE BUS EXPANSION.

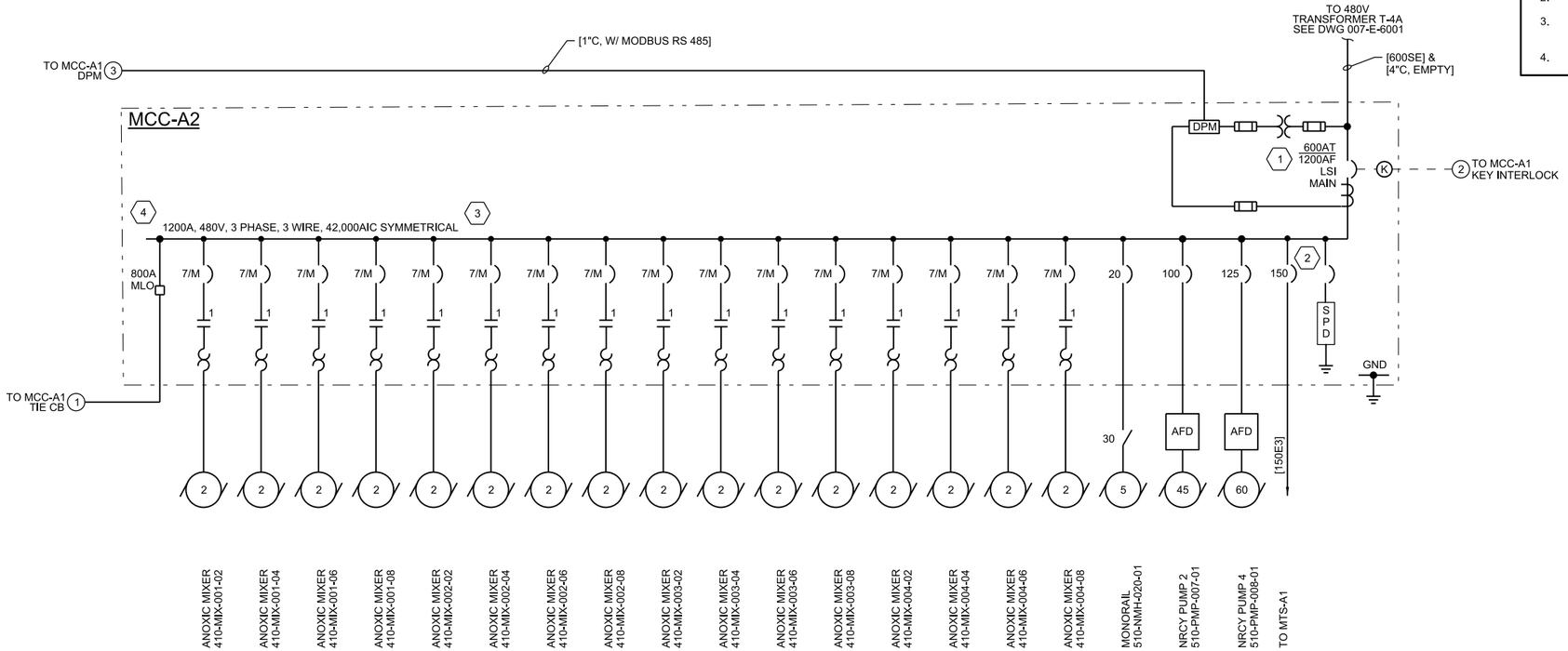

MCC-A2 ONE-LINE DIAGRAM

NTS

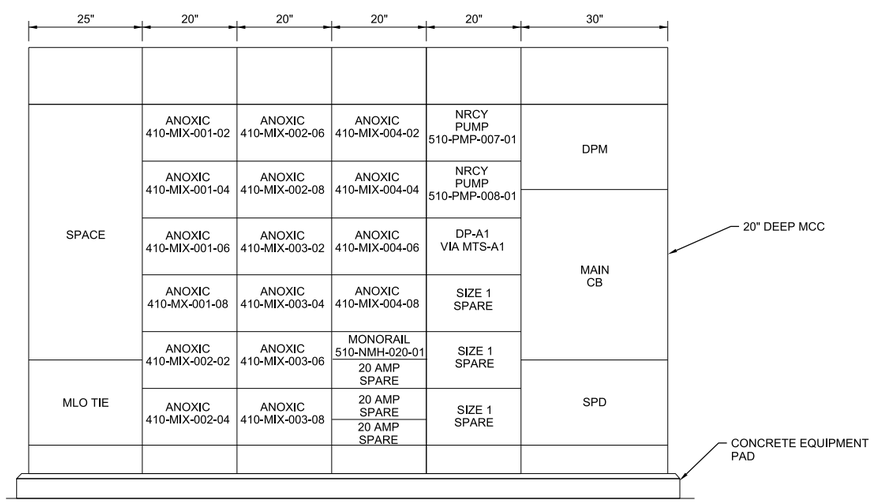

(3) MCC-A2 FRONT ELEVATION

NTS

MCC-A2 CONNECTED LOAD	
DESCRIPTION	AMPS
410-MIX-001-02	3.4
410-MIX-001-04	3.4
410-MIX-001-06	3.4
410-MIX-001-08	3.4
410-MIX-002-02	3.4
410-MIX-002-04	3.4
410-MIX-002-06	3.4
410-MIX-002-08	3.4
410-MIX-003-02	3.4
410-MIX-003-04	3.4
410-MIX-003-06	3.4
410-MIX-003-08	3.4
410-MIX-040-02	3.4
410-MIX-004-04	3.4
410-MIX-004-06	3.4
410-MIX-004-08	3.4
510-NMH-020-01	7.6
510-PMP-007-01	60.0
510-PMP-008-01	77.0
TOTALS	199.0
TOTAL PLUS 25% OF LARGER MOTOR	218.25

DAVID C NICHOLSON LICENSE No 60201 STATE OF FLORIDA PROFESSIONAL ENGINEER

NO.	DATE	REVISION	BY	APVD

DSGN N ADAMS | DR N ADAMS | CHK M WAYNE | APVD D NICHOLSON

REUSE OF DOCUMENTS: THIS DOCUMENT, AND THE IDEAS AND DESIGNS INCORPORATED HEREIN, AS AN INSTRUMENT OF PROFESSIONAL SERVICE IS THE PROPERTY OF CH2M HILL AND IS NOT TO BE USED IN WHOLE OR IN PART, FOR ANY OTHER PROJECT WITHOUT THE WRITTEN AUTHORIZATION OF CH2MHILL.

©CH2M HILL 2012. ALL RIGHTS RESERVED.

3011 SW WILLISTON RD
GAINESVILLE, FL 32608
EB0000072 AAC001992
DAVID C NICHOLSON - PE 60201

SWWRF NITROGEN REMOVAL AND DIGESTER MODIFICATIONS
MANATEE COUNTY UTILITIES
MANATEE COUNTY, FL

CH2MHILL®

ELECTRICAL

EXISTING SOUTH ELECTRICAL BLDG MCC-A2 ONE LINE DIAGRAM AND ELEVATION

VERIFY SCALE
BAR IS ONE INCH ON ORIGINAL DRAWING.
0 1"

DATE	DECEMBER 2013
PROJ	457133
DWG	600-E-6002
SHEET	of

ISSUED FOR BID

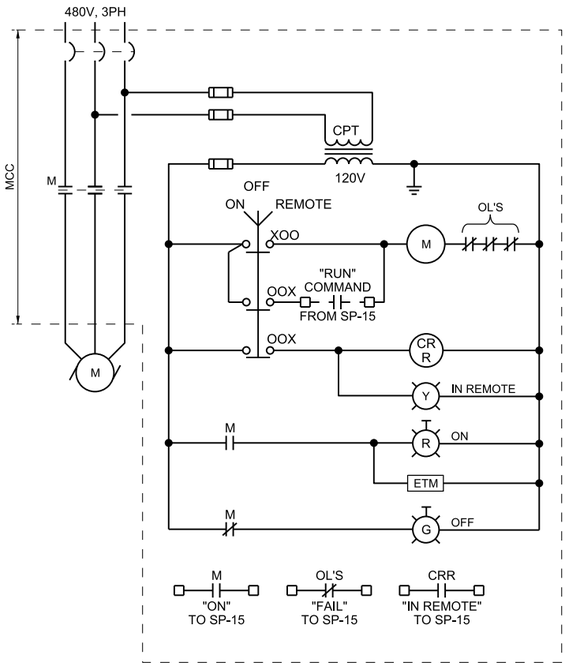

ANOXIC MIXER 410-MIX-00(X)-0(Y)

(X) = 1, 2, 3, 4
(Y) = 1, 2, 3, 4, 5, 6, 7, 8

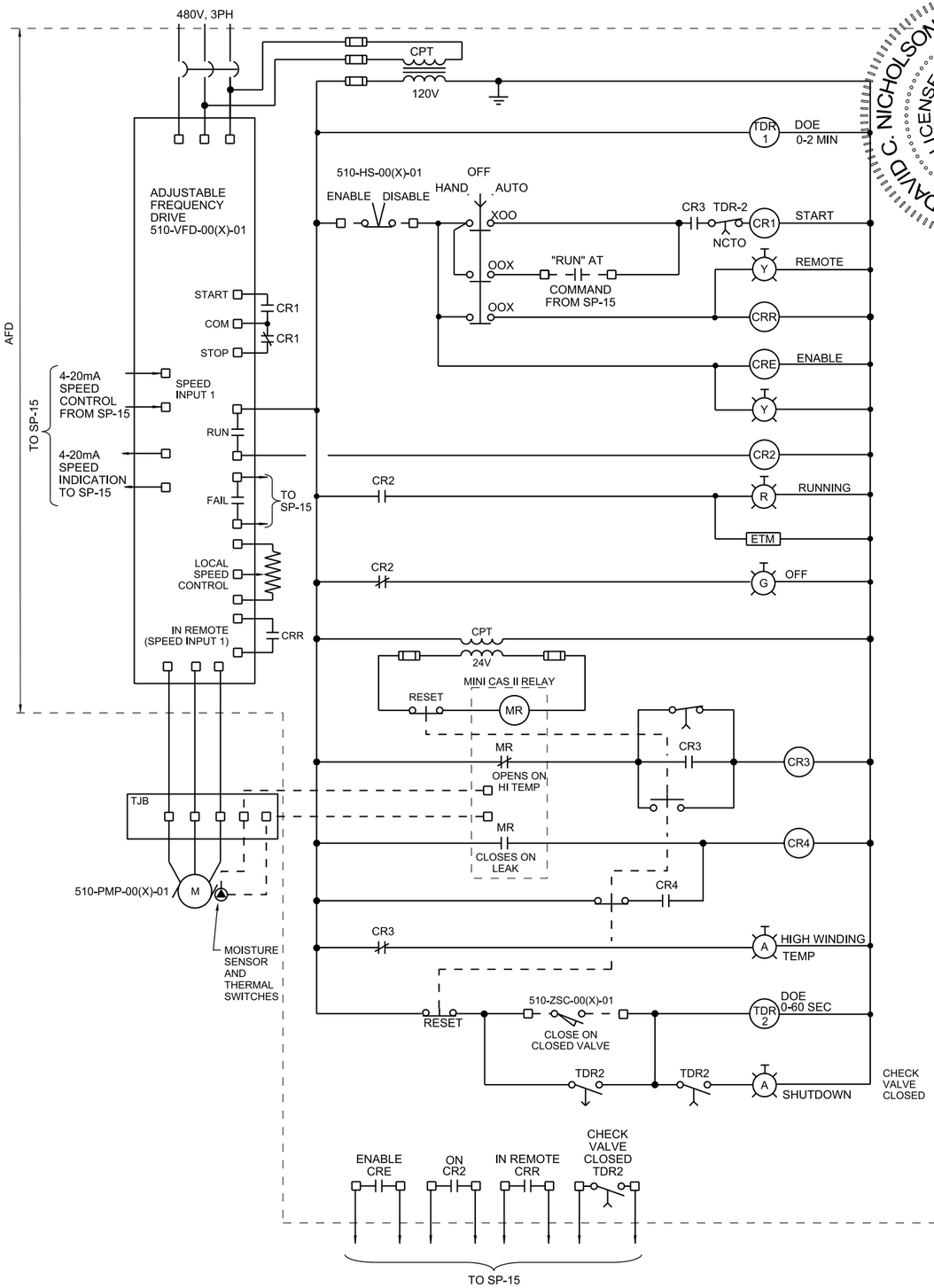

NRCY PUMP 510-PMP-00(X)-01

(X) = 5, 6, 7, 8

DAVID C. NICHOLSON
LICENSE
No 60201
STATE OF FLORIDA
PROFESSIONAL ENGINEER

NO.	DATE	REVISION	BY	APVD

DSGN N ADAMS | DR N ADAMS | CHK M WAYNE | APVD D NICHOLSON

3011 SW WILLISTON RD
GAINESVILLE, FL 32608
EB0000072 AAC001992
DAVID C NICHOLSON - PE 60201

SWWRF NITROGEN REMOVAL AND DIGESTER MODIFICATIONS
MANATEE COUNTY UTILITIES
MANATEE COUNTY, FL

CH2MHILL®

ELECTRICAL
EXISTING SOUTH ELECTRICAL BLDG CONTROL & RISER DIAGRAMS

VERIFY SCALE
BAR IS ONE INCH ON ORIGINAL DRAWING.
0 1"

DATE	DECEMBER 2013
PROJ	457133
DWG	600-E-6003
SHEET	of

ISSUED FOR BID

REUSE OF DOCUMENTS: THIS DOCUMENT, AND THE IDEAS AND DESIGNS INCORPORATED HEREIN, AS AN INSTRUMENT OF PROFESSIONAL SERVICE, IS THE PROPERTY OF CH2M HILL AND IS NOT TO BE USED, IN WHOLE OR IN PART, FOR ANY OTHER PROJECT WITHOUT THE WRITTEN AUTHORIZATION OF CH2M HILL.
©CH2M HILL 2012. ALL RIGHTS RESERVED.

PANEL: DP-A1 | LOCATION: SOUTH ELECTRICAL BUILDING 600
SERVICE VOLTAGE: 480Y/277V | PHASE: 3 | WIRE: 4
TOTAL LOAD KVA: 52.2 | BUS SIZE: 200 | MAIN SIZE: 150 | TYPE CB
REMARKS: INTERGRAL SPD | NEUTRAL: N/A | MOUNTING: SURFACE | AIC: 42K

LOAD IN KVA A	LOAD IN KVA B	LOAD IN KVA C	CIRCUIT DESCRIPTION	BKR A/P	CKT NO.	CKT NO.	BKR A/P	CIRCUIT DESCRIPTION	LOAD IN KVA A	LOAD IN KVA B	LOAD IN KVA C
10.0			XFMR/PANELBOARD LP-A1	60/3	1	2	15/3	600-AC-1	3.7		
	10.0				3	4				3.7	
		10.0			5	6					3.7
					7	8	15/3	600-AC-2	3.7		
					9	10				3.7	
					11	12					3.7
					13	14					
					15	16					
					17	18					
					19	20					
					21	22					
					23	24					
					25	26					
					27	28					
					29	30					
					31	32					
					33	34					
					35	36					
					37	38	30/3	SPD			
					39	40					
					41	42					
10.0	10.0	10.0	TOTAL						7.4	7.4	7.4

PANEL: LP-A1 | LOCATION: SOUTH ELECTRICAL BUILDING 600
SERVICE VOLTAGE: 208Y/120V | PHASE: 3 | WIRE: 4
TOTAL LOAD KVA: 7.0 | BUS SIZE: 100 | MAIN SIZE: 100 | TYPE: CB
REMARKS: INTREGRAL SPD | NEUTRAL: FULL | MOUNTING: SURFACE | AIC: 22K

LOAD IN KVA A	LOAD IN KVA B	LOAD IN KVA C	CIRCUIT DESCRIPTION	BKR A/P	CKT NO.	CKT NO.	BKR A/P	CIRCUIT DESCRIPTION	LOAD IN KVA A	LOAD IN KVA B	LOAD IN KVA C
0.3			LIGHTS: SPLITTER BOX1	20/1	1	2	20/1	LIGHTS ELECTRICAL ROOM	0.7		
	0.3		LIGHTS: SPLITTER BOX2	20/1	3	4	20/1	RECPTS ELEC RM WEST		0.7	
		0.2	RECEPT SPLITTER BOX1	20/1	5	6	20/1	RECPTS ELEC RM EAST			0.7
0.2			RECEPT SPLITTER BOX2	20/1	7	8	20/1	SP-15	1.5		
	1.0		RECEPT SPLITTER BOX1	30/1	9	10	20/1	410-FAP-001-01		0.5	
		1.0	RECEPT SPLITTER BOX2	30/1	11	12					
					13	14					
					15	16					
					17	18					
					19	20					
					21	22					
					23	24					
					25	26					
					27	28					
					29	30					
					31	32					
					33	34					
					35	36					
					37	38	30/3	SPD			
					39	40					
					41	42					
0.5	1.3	1.2	TOTAL						2.2	1.2	0.7

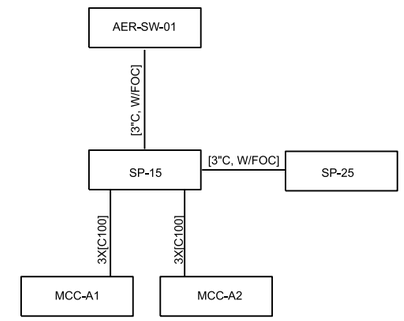

OVERALL RISER DIAGRAM

DAVID C. NICHOLSON ★ LICENSE No 60201 ★ STATE OF FLORIDA ★ PROFESSIONAL ENGINEER

NO.	DATE	REVISION	BY	APVD

DSGN N ADAMS | DR N ADAMS | CHK M WAYNE | APVD D NICHOLSON

REUSE OF DOCUMENTS: THIS DOCUMENT, AND THE IDEAS AND DESIGNS INCORPORATED HEREIN, AS AN INSTRUMENT OF PROFESSIONAL SERVICE, IS THE PROPERTY OF CH2M HILL AND IS NOT TO BE USED, IN WHOLE OR IN PART, FOR ANY OTHER PROJECT WITHOUT THE WRITTEN AUTHORIZATION OF CH2MHILL.
©CH2M HILL 2012. ALL RIGHTS RESERVED.

3011 SW WILLISTON RD
GAINESVILLE, FL 32608
EB0000072 AAC001992
DAVID C NICHOLSON - PE 60201

SWWRF NITROGEN REMOVAL
AND DIGESTER MODIFICATIONS
MANATEE COUNTY UTILITIES
MANATEE COUNTY, FL

CH2MHILL®

ELECTRICAL
EXISTING SOUTH ELECTRICAL BLDG
PANELBOARD SCHEDULES

VERIFY SCALE
BAR IS ONE INCH ON ORIGINAL DRAWING.
0 1"

DATE	DECEMBER 2013
PROJ	457133
DWG	600-E-6004
SHEET	of

ISSUED FOR BID

FILENAME: 600-E-6004_457133.dgn PLOT DATE: 12/13/2013 PLOT TIME: 1:59:28 PM

NOTES:
1. FIELD VERIFY LOCATION OF ROAD.

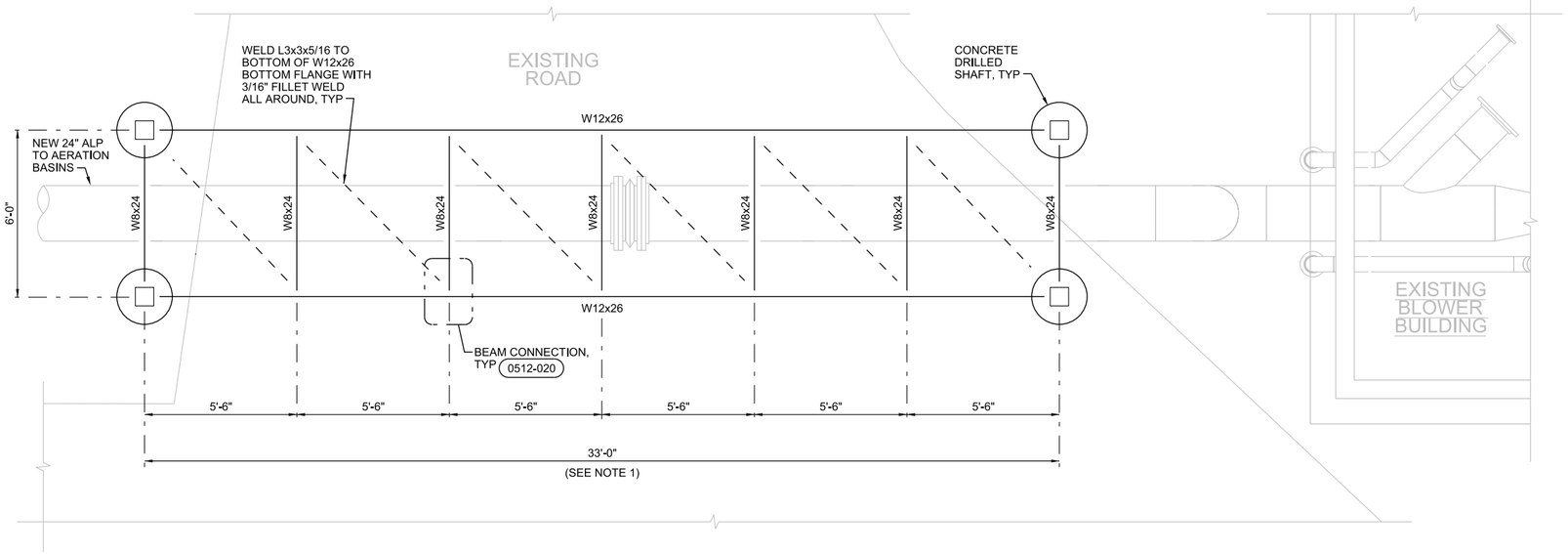

PLAN
3/8"=1'-0"

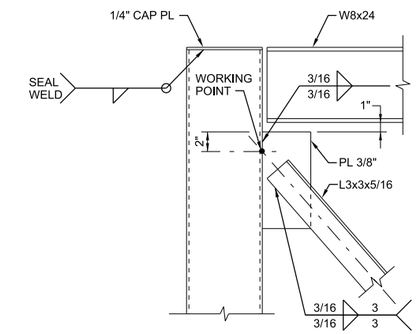

NOTE:
W12x26 BEAM NOT SHOWN FOR CLARITY

1 DETAIL
1 1/2"=1'-0"

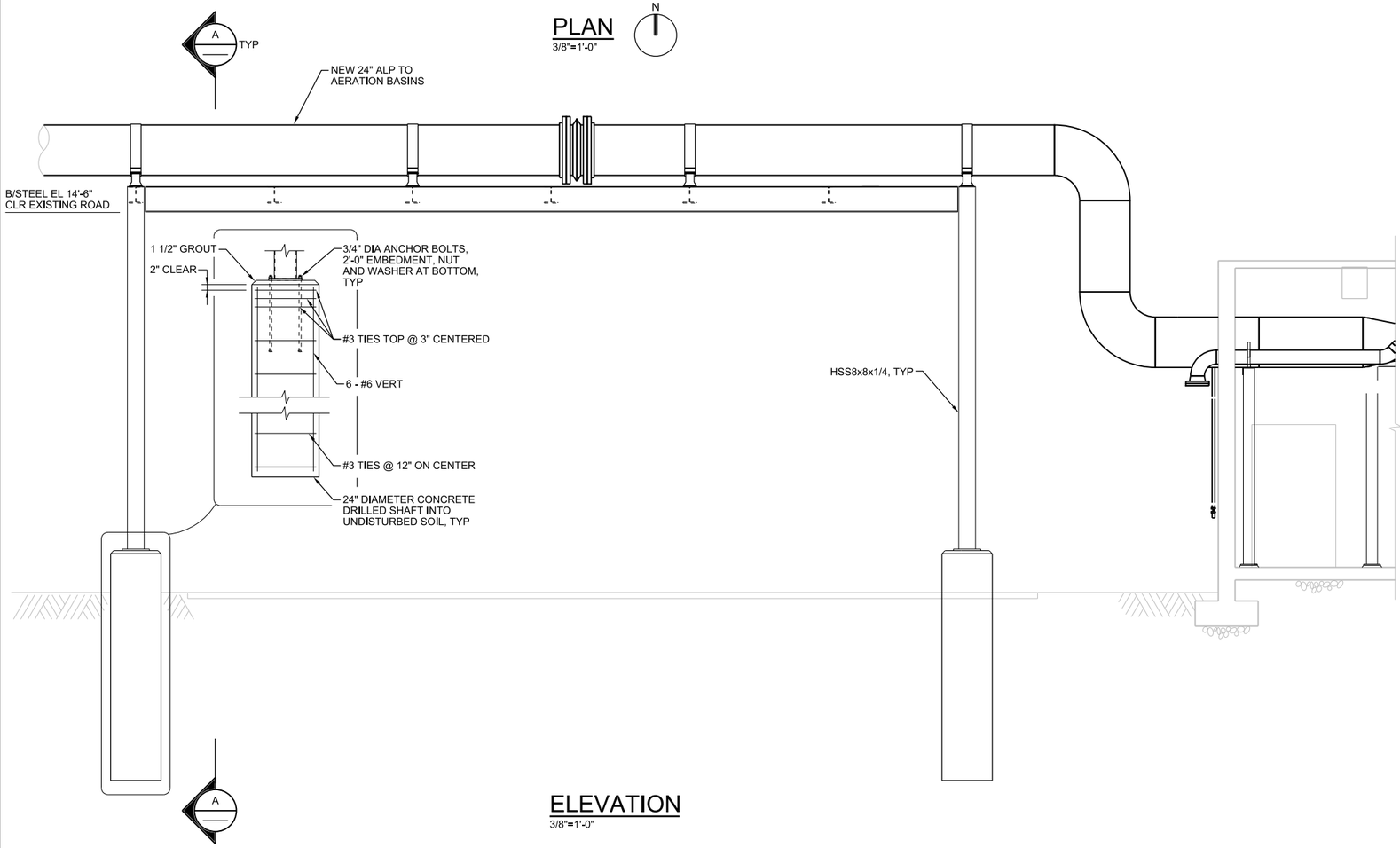

ELEVATION
3/8"=1'-0"

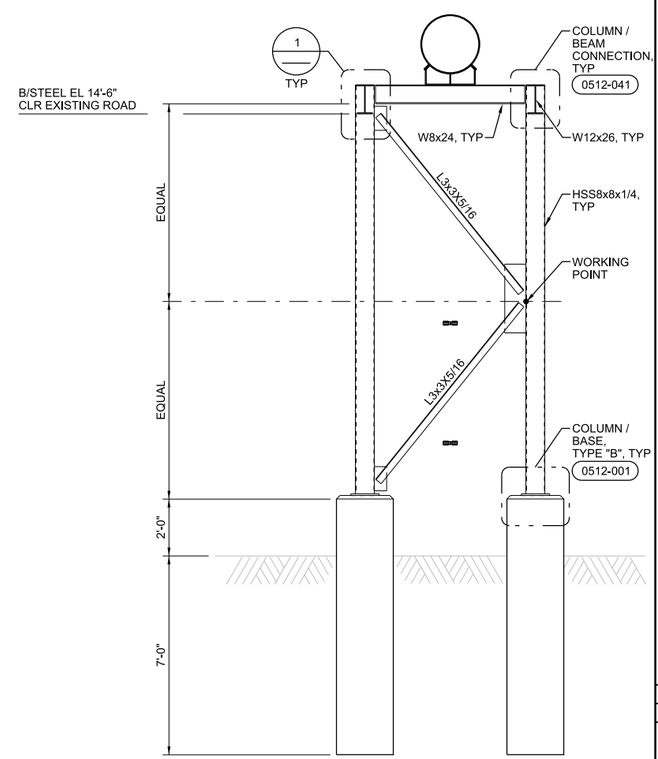

A SECTION
3/8"=1'-0"

DELAYNE LANGE LICENSE No 70194 STATE OF FLORIDA PROFESSIONAL ENGINEER

NO.	DATE	REVISION	BY	APVD

DR: D LANGE | CHK: B BARBER | M CHRZANOWSKI | D LANGE

©CH2M HILL 2012. ALL RIGHTS RESERVED.

3011 SW WILLISTON RD
GAINESVILLE, FL 32608
EB0000072 AAC001992
DELAYNE LANGE - PE 70194

SWWRF NITROGEN REMOVAL AND DIGESTER MODIFICATIONS
MANATEE COUNTY UTILITIES
MANATEE COUNTY, FL

CH2MHILL®

STRUCTURAL
BLOWER BUILDING
PIPE SUPPORT - PLAN, ELEVATION, SECTION AND DETAIL

REUSE OF DOCUMENTS: THIS DOCUMENT, AND THE IDEAS AND DESIGNS INCORPORATED HEREIN, AS AN INSTRUMENT OF PROFESSIONAL SERVICE, IS THE PROPERTY OF CH2M HILL AND IS NOT TO BE USED, IN WHOLE OR IN PART, FOR ANY OTHER PROJECT WITHOUT THE WRITTEN AUTHORIZATION OF CH2M HILL.

AS NOTED
VERIFY SCALE
BAR IS ONE INCH ON ORIGINAL DRAWING.
0 1"

DATE	DECEMBER 2013
PROJ	457133
DWG	827-S-2001
SHEET	of

ISSUED FOR BID

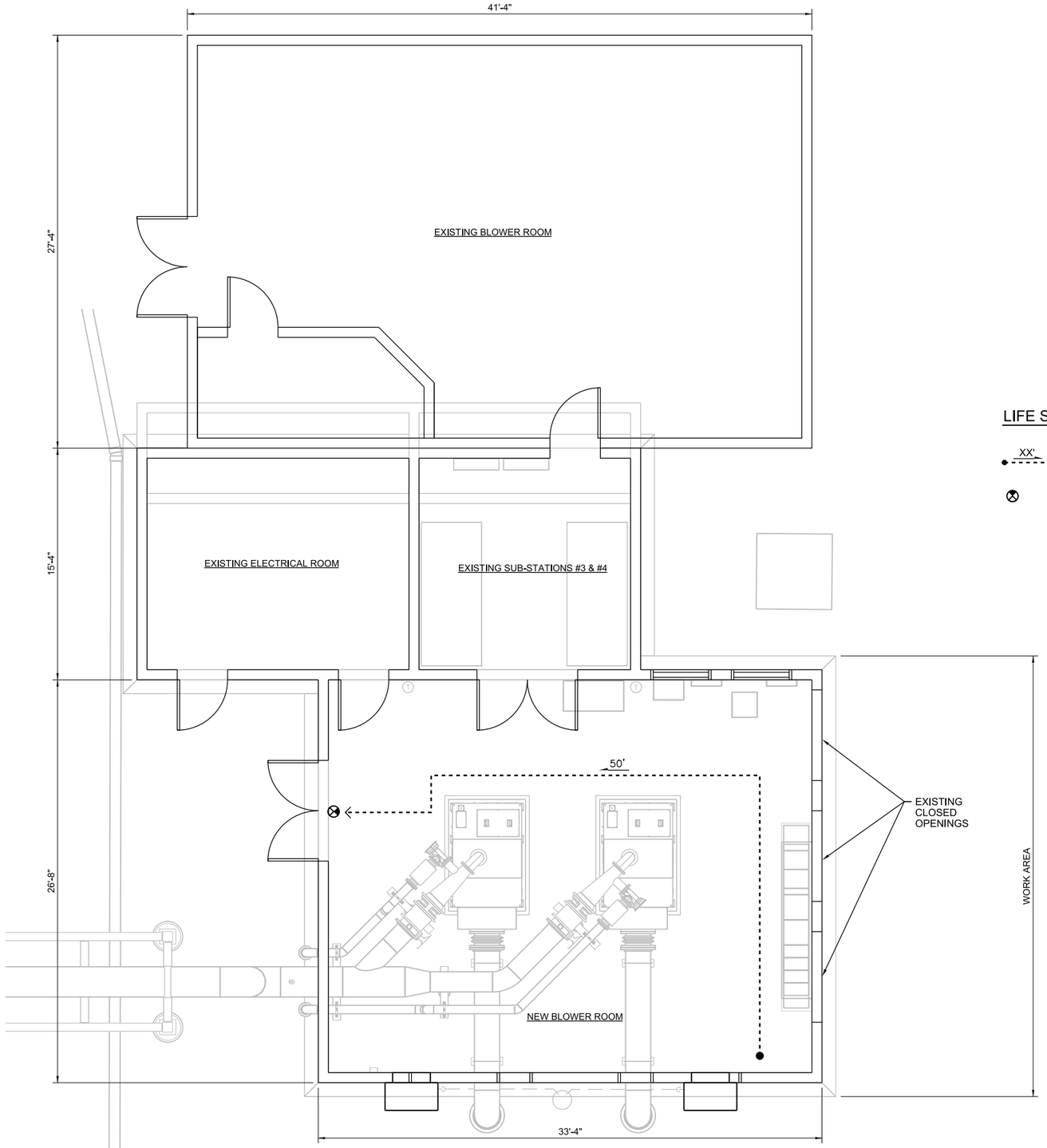

LIFE SAFETY FLOOR PLAN

1/4"=1'-0"

LIFE SAFETY PLAN LEGEND:

XX' TRAVEL DISTANCE TO EXIT = 30 FEET

ONE SIDED EXIT LIGHT TO REMAIN

NOTE: EXISTING FIRE EXTINGUISHERS TO REMAIN.

PLUMBING

NO TOILET FACILITIES INCLUDING POTABLE DRINKING WATER ARE PROVIDED. SCALEHOUSE FACILITY IS WITHIN 500 FEET.

FIRE SEPARATION REQUIREMENTS

ACTUAL FIRE SEPARATION DISTANCE (TABLE 602)	20 FT OR GREATER	0 HR
DISTANCE FROM ADJACENT BUILDING OR PROPERTY LINE	20 FT OR GREATER	0 HR

FIRE PROTECTION

SPRINKLERS	NOT PROVIDED
FIRE EXTINGUISHERS	EXISTING
EXIT LIGHTING	EXISTING

APPLICABLE CODES

2010 FLORIDA BUILDING CODE
2010 FLORIDA EXISTING BUILDING CODE
2010 FLORIDA PLUMBING CODE
2010 FLORIDA MECHANICAL CODE
2010 FLORIDA FIRE PREVENTION CODE
NATIONAL ELECTRICAL CODE, 2011 EDITION

DESCRIPTION

THIS EXISTING ROOM IN AN EXISTING BLOWER BUILDING IS BEING PUT INTO USE AS HOUSING NEW BLOWERS.

EXISTING BUILDING CODE

CLASSIFICATION OF WORK	ALTERATION LEVEL 1

PROJECT CODE DATA

2012 FBC

BUILDING: EXISTING BLOWER BUILDING

GENERAL INFORMATION

USE AND OCCUPANCY CLASSIFICATION	ASSUMED F-1 OR UTILITY
CONSTRUCTION CLASSIFICATION	ASSUMED TYPE VB UNPROTECTED

AREA AND HEIGHT LIMITATIONS

MAXIMUM ALLOWABLE AREA (TABLE 503)	5,500 SF
ACTUAL AREA: (TOTAL EXISTING BUILDING)	2,538 SF (900 SF BLOWER RM)
ACTUAL PER FLOOR: (TOTAL AFFECTED SF)	900 SF
MAXIMUM ALLOWABLE STORIES:	1
ACTUAL NUMBER OF STORIES:	1
MAXIMUM ALLOWABLE HEIGHT:	40'-0"
ACTUAL HEIGHT:	EXISTING TO REMAIN

OCCUPANCY / EGRESS INFORMATION

DESIGN OCCUPANCY (TABLE 1004.1.1)	3 PERSONS
ACTUAL NUMBER OF OCCUPANTS	3 MAXIMUM
EGRESS WIDTH BASED ON OCCUPANCY (TABLE 1005.1)	36" PROVIDED
ALLOWABLE DEAD END LENGTH (SECTION 1018.4)	20 FT
NUMBER OF EXITS (SECTION 1021.2)	2
NUMBER OF EXITS (SECTION 1015.1)	75 FT 1 MEANS OF EGRESS
ALLOWABLE COMMON PATH OF TRAVEL (SECTION 1014.3)	75 FEET
MAX TRAVEL DISTANCE ALLOWED (SECTION 1016.1)	200 FEET

REQUIRED FIRE RESISTANT RATINGS

BUILDING ELEMENTS (TABLE 601)	VB
STRUCTURAL FRAME	0 HR
EXTERIOR BEARING WALLS	0 HR
INTERIOR BEARING WALLS	0 HR
INTERIOR NON-BEARING WALLS	0 HR
FLOOR CONSTRUCTION	0 HR
ROOF CONSTRUCTION	0 HR
SHAFT ENCLOSURE (707.4)	N/A
STAIRWAY ENCLOSURE (1019.1)	N/A
CORRIDOR (TABLE 1016.1)	N/A
OCCUPANCY SEPARATION (302.3.2)	N/A
INCIDENTAL USE AREAS (302.1.1)	N/A

NO.	DATE	REVISION	BY	APVD

DSGN A COULLIAS | DR A COULLIAS | CHK A DOLSAK | APVD B TRAUTWEIN

CH2MHILL®
3011 SW WILLISTON RD
GAINESVILLE, FL 32608
EB0000072 AAC001992
BETH TRAUTWEIN - AR 91388

SWWRF NITROGEN REMOVAL AND DIGESTER MODIFICATIONS
MANATEE COUNTY UTILITIES
MANATEE COUNTY, FL

ARCHITECTURAL

EXISTING BLOWER BUILDING LIFE SAFETY PLAN

VERIFY SCALE
BAR IS ONE INCH ON ORIGINAL DRAWING.
0 1"

DATE	APRIL 2014
PROJ	457133
DWG	827-A-0001
SHEET	of

ISSUED FOR BID

REUSE OF DOCUMENTS: THIS DOCUMENT, AND THE IDEAS AND DESIGNS INCORPORATED HEREIN, AS AN INSTRUMENT OF PROFESSIONAL SERVICE, IS THE PROPERTY OF CH2M HILL AND IS NOT TO BE USED, IN WHOLE OR IN PART, FOR ANY OTHER PROJECT WITHOUT THE WRITTEN AUTHORIZATION OF CH2MHILL.
©CH2M HILL 2012. ALL RIGHTS RESERVED.

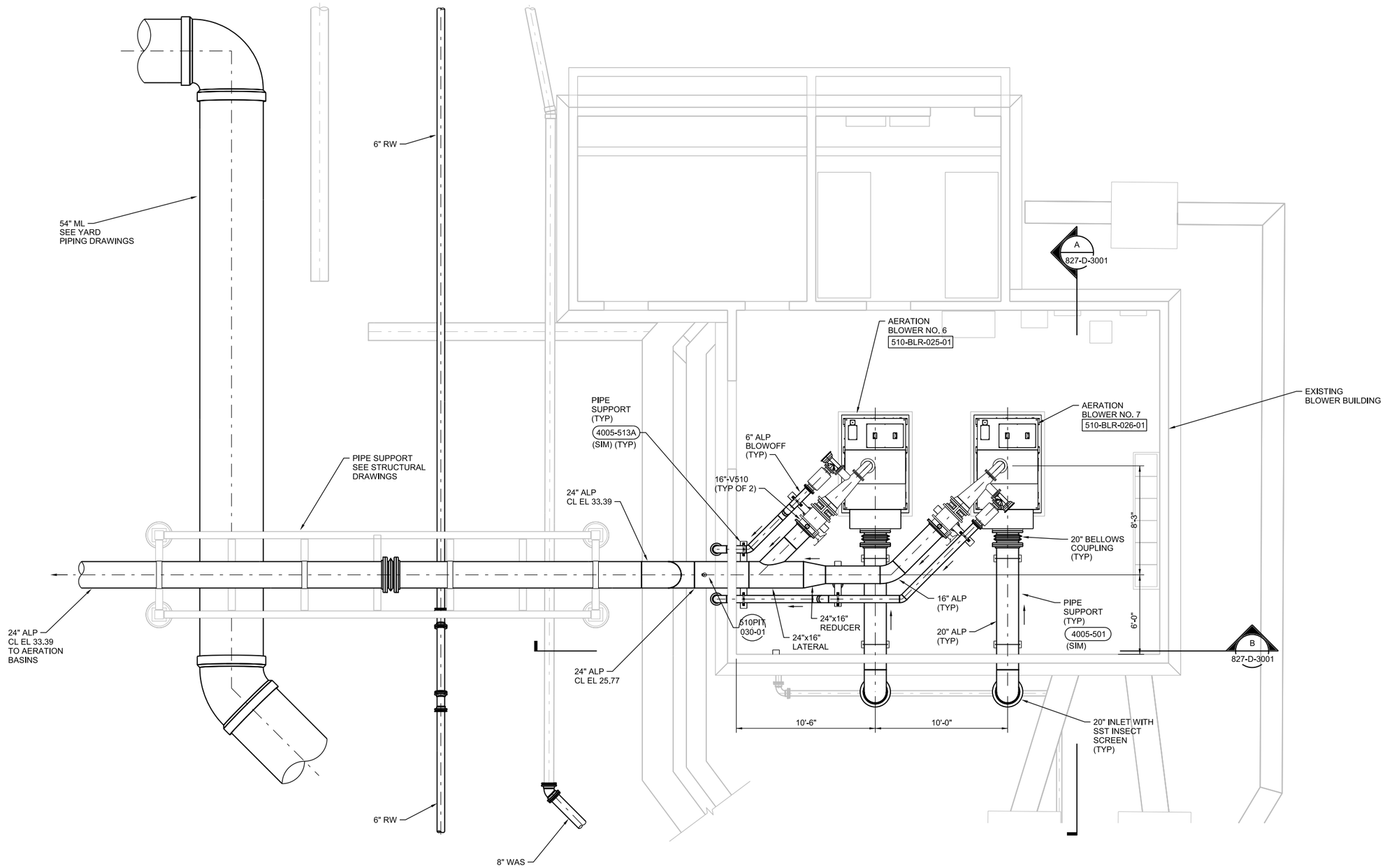

PLAN

1/4"=1'-0"

TAO FU
LICENSE
No 63138
STATE OF
FLORIDA
PROFESSIONAL ENGINEER

NO.	DATE	REVISION	CHK	APVD

DSGN T FU | DR N PATTERSON | CHK R BOE | APVD T FU

3011 SW WILLISTON RD
GAINESVILLE, FL 32608
EB0000072 AAC001992
TAO FU - PE 63138

SWWRF NITROGEN REMOVAL
AND DIGESTER MODIFICATIONS
MANATEE COUNTY UTILITIES
MANATEE COUNTY, FL

CH2MHILL®

PROCESS
BLOWER BUILDING
PLAN

VERIFY SCALE
BAR IS ONE INCH ON ORIGINAL DRAWING.
0 1"

DATE	DECEMBER 2013
PROJ	457133
DWG	827-D-2001
SHEET	of

ISSUED FOR BID

REUSE OF DOCUMENTS: THIS DOCUMENT, AND THE IDEAS AND DESIGNS INCORPORATED HEREIN, AS AN INSTRUMENT OF PROFESSIONAL SERVICE, IS THE PROPERTY OF CH2M HILL AND IS NOT TO BE USED, IN WHOLE OR IN PART, FOR ANY OTHER PROJECT WITHOUT THE WRITTEN AUTHORIZATION OF CH2MHILL.
©CH2M HILL 2012. ALL RIGHTS RESERVED.

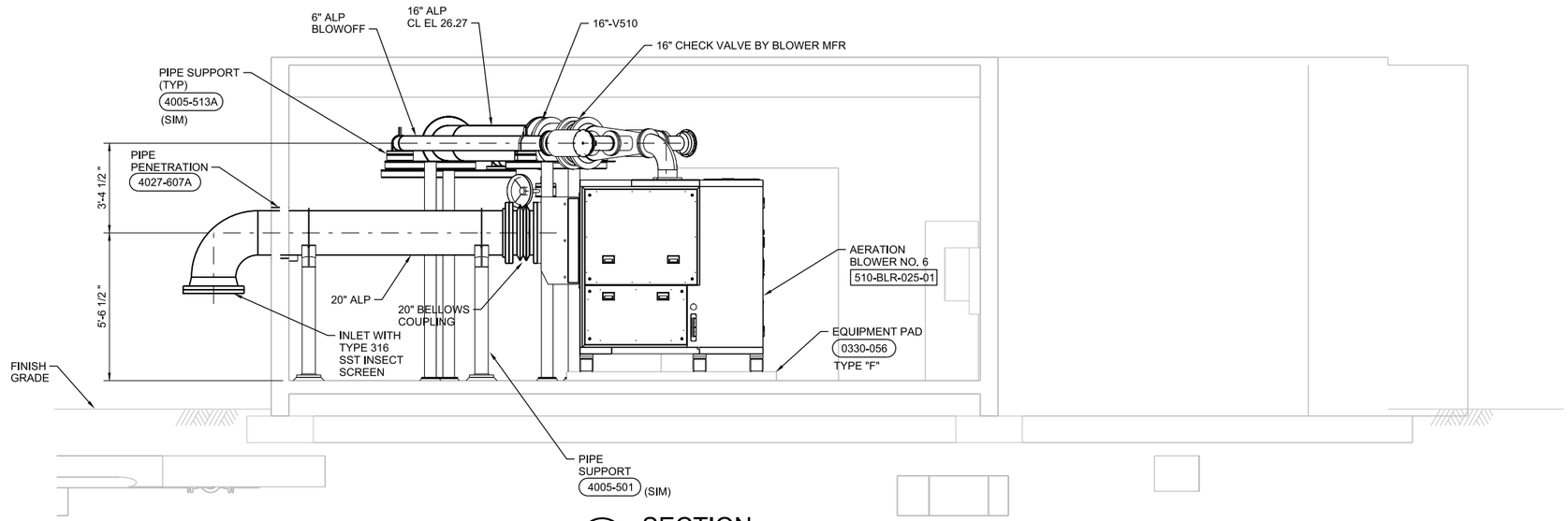

A SECTION
3/8"=1'-0"
827-D-2001

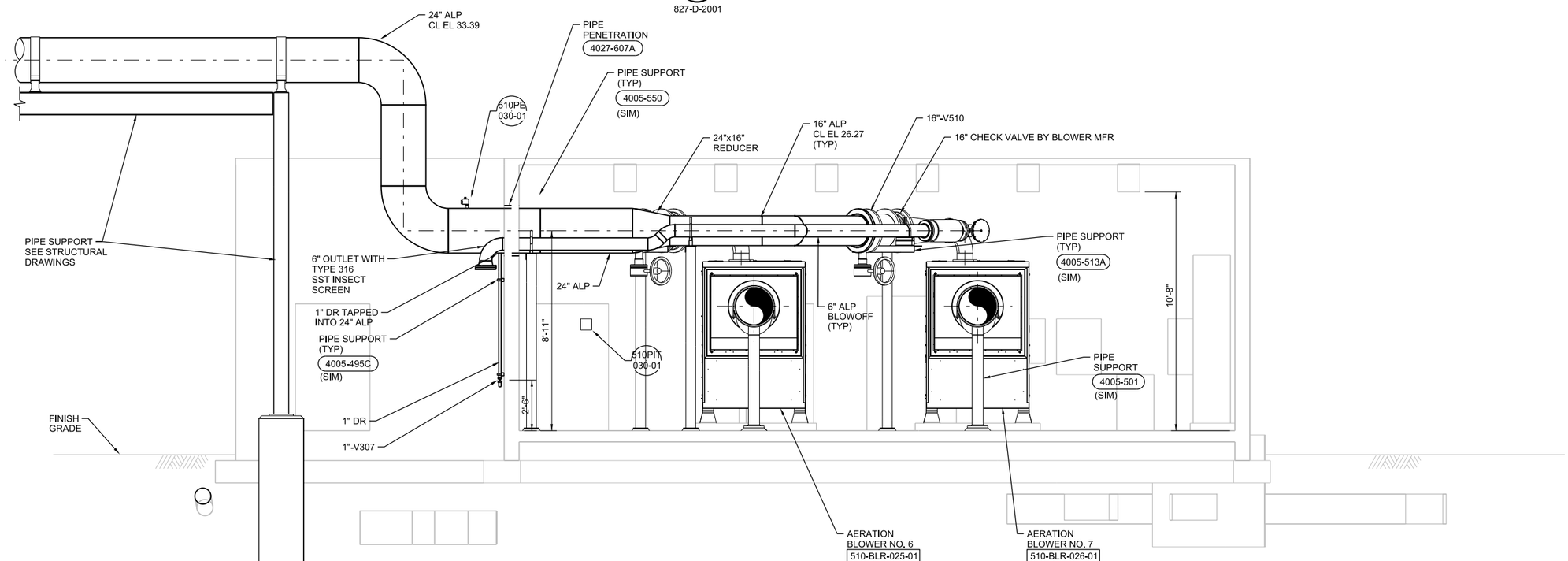

B SECTION
3/8"=1'-0"
827-D-2001

TAO FU
LICENSE
No 63138
STATE OF
FLORIDA
PROFESSIONAL ENGINEER

NO.	DATE	REVISION	DR	CHK	APVD
DSGN			T FU	N PATTERSON	R BOE

T FU

©CH2M HILL 2012. ALL RIGHTS RESERVED.

REUSE OF DOCUMENTS: THIS DOCUMENT, AND THE IDEAS AND DESIGNS INCORPORATED HEREIN, AS AN INSTRUMENT OF PROFESSIONAL SERVICE IS THE PROPERTY OF CH2M HILL AND IS NOT TO BE USED, IN WHOLE OR IN PART, FOR ANY OTHER PROJECT WITHOUT THE WRITTEN AUTHORIZATION OF CH2MHILL.

3011 SW WILLISTON RD
GAINESVILLE, FL 32608
EB0000072 AAC001992
TAO FU - PE 63138

SWWRF NITROGEN REMOVAL
AND DIGESTER MODIFICATIONS
MANATEE COUNTY UTILITIES
MANATEE COUNTY, FL

CH2MHILL®

PROCESS
BLOWER BUILDING
SECTIONS

VERIFY SCALE
BAR IS ONE INCH ON ORIGINAL DRAWING.
0 1"

DATE	DECEMBER 2013
PROJ	457133
DWG	827-D-3001
SHEET	of

ISSUED FOR BID

FILENAME: 827-D-3001_457133.dgn PLOT DATE: 12/13/2013 PLOT TIME: 2:14:11 PM

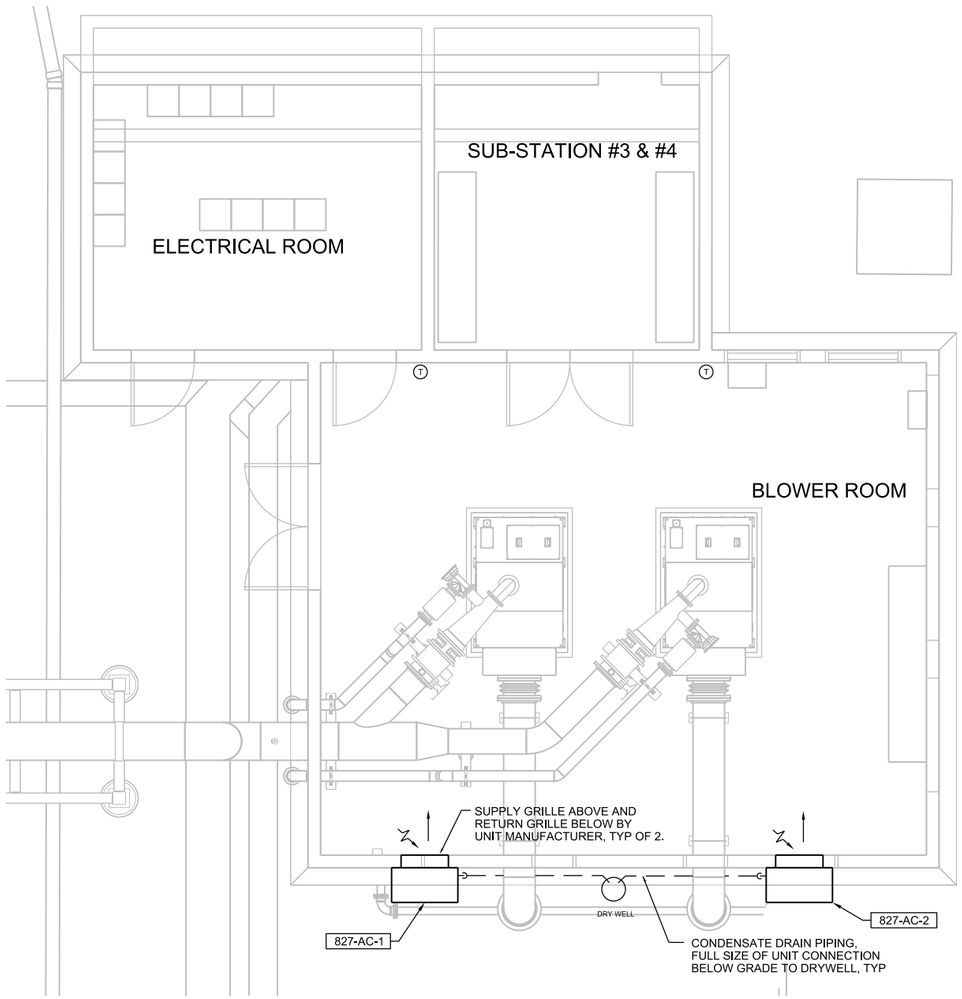

GENERAL NOTES:

1. CONTRACTOR SHALL INSPECT SITE TO BECOME FAMILIAR WITH THE SCOPE OF THE WORK. THESE DOCUMENTS DO NOT REFLECT AS-BUILT CONDITIONS. ANY DISCREPANCIES BETWEEN THESE DOCUMENTS AND THE ACTUAL CONDITIONS SHALL BE REPORTED TO THE ENGINEER FOR RESOLUTION.
2. MECHANICAL WORK SHALL COMPLY WITH ALL APPLICABLE CODES. VERIFY ALL REQUIREMENTS PRIOR TO COMMENCING WORK.
3. COORDINATE THERMOSTAT LOCATIONS WITH EXISTING CONDITIONS AND THE ARCHITECT/ENGINEER PRIOR TO INSTALLATION.
4. THE UNIT SHALL BE SECURE BY WALL MOUNTING BRACKETS WHICH SECURE THE UNIT TO THE OUTSIDE WALL SURFACE AT BOTH SIDES. A BOTTOM MOUNTING BRACKET IS PROVIDED FOR EASE INSTALLATION, BUT IS NOT REQUIRED.
5. A BEAD OF SILICONE CAULKING SHALL BE PLACED BEHIND THE SIDE MOUNTING FLANGES AND UNDER TOP FLASHING AT TIME OF INSTALLATION.
6. SECURE UNIT WITH 5/16 LAG BOLTS; USE 7/8 INCH DIAMETER FLAT WASHERS ON THE LAG BOLTS.
7. INSTALL WORK SO AS TO BE READILY ACCESSIBLE FOR OPERATION, MAITENANCE AND REPAIR. MINOR DEVIATIONS FROM DRAWINGS MAY BE MADE TO ACCOMPLISH THIS, BUT CHANGES WHICH INVOLVE EXTRA COST SHALL NOT BE MADE WITHOUT APPROVAL.
8. DISCONNECT, REMOVE AND/OR RELOCATE EXISTING MATERIAL, EQUIPMENT AND OTHER WORK AS NOTED OR REQUIRED FOR PROPER INSTALLATION OF THE NEW SYSTEM.
9. ALL SYSTEMS SHALL BE CLEAN OF FOREIGN MATERIAL AND ROUGH SPOTS PRIOR TO BEING PLACED IN SERVICE AND BEFORE OPERATIONAL TEST ARE PERFORMED.
10. INSTALLATION OF ALL EQUIPMENTS AND THEIR ACCESSORIES SHALL BE PER MANUFACTURER'S PUBLISHED RECOMMENDATIONS.
11. ALL MATERIALS AND EQUIPMENT TO BE NEW UNLESS OTHERWISE NOTED.

SEQUENCE OF OPERATION

WHEN THE TEMPERATURE IN THE BLOWER BUILDING IS OVER THE FIRST COOLING TEMPERATURE SETPOINT (85 F ADJ), THE FIRST UNIT SUPPLY FAN SHALL ENERGIZE. UPON FURTHER RISE OF THE SPACE TEMPERATURE OVER THE SECOND COOLING SETPOINT TEMPERATURE (87 F ADJ), THE SECOND UNIT SUPPLY FAN SHALL ENERGIZE. AS THE SPACE TEMPERATURE SETPOINTS ARE SATISFIED, THE UNIT'S SUPPLY FANS SHALL DE-ENERGIZE. WHEN THE TEMPERATURE IN THE ELECTRICAL ROOM IS UNDER

WHEN THE TEMPERATURE IN THE ELECTRICAL ROOM IS UNDER THE HEATING SETPOINT TEMPERATURE (60 F ADJ), THE ELECTRIC UNIT HEATER SHALL ENERGIZE. AS THE TEMPERATURE SETPOINT IS SATISFIED THE HEATER SHALL BE DE-ENERGIZED.

WALL MOUNT AIR CONDITIONER

23 81 00.08

SYMBOL	LOCATION	INDOOR FAN DATA						DX COOLING DATA				ELECTRIC HEATING DATA				COMPRESSOR DATA						CONDENSER FAN DATA					UNIT ELECTRICAL DATA					UNIT DIMENSIONS				MANUFACTURER	MODEL	REMARKS
		SUPPLY AIR CFM	OUTSIDE AIR CFM	EXTERNAL STATIC P IN W.G.	HP	VOLT	PH	TOTAL BTU/H	EAT DEG. F DB	EAT DEG. F WB	AMBIENT TEMP. DEG. F	kW	STEPS	VOLT	PH	NO.	STEPS	RLA (EA)	LRA (EA)	VOLT	PH	NO.	H.P. (EA)	VOLT	PH	CFM (TOTAL)	#CONN.	MCA	MOCP (FUSE)	VOLT	PH	INCHES H	INCHES W	INCHES D	MAX WEIGHT LBS			
827-AC-1	BLOWER BUILDING	1800	0	0.2	1/2	460	3	68,000	80	49	92	9	1	460	3	1	1	14.1	87.0	460	3	1	3/4	460	3	3500	1	23	30	460	3	94.87	42	22.25	575	BARD	W70A1-C9BXXCJ	A,B,C,D,E,F,G,H,I,J
827-AC-2	BLOWER BUILDING	1800	0	0.2	1/2	460	3	68,000	80	49	92	9	1	460	3	1	1	14.1	87.0	460	3	1	3/4	460	3	3500	1	23	30	460	3	94.87	42	22.25	575	BARD	W70A1-C9BXXCJ	A,B,C,D,E,F,G,H,I,J

REMARKS:

A: CONDENSER COIL SHALL HAVE DIP APPLIED ANTI-CORROSION COATING (NOT SPRAY APPLIED)
B: 2 INCH DEEP PLEATED AIR FILTER SIZED TO SUIT RETURN GRILLE
C: FACTORY INSTALLED DISCONNECT
E: COLD WEATHER KIT
F: 5 YEAR COMPRESSOR WARRANTY
G: STANDARD RETURN AIR GRILLE
H: STANDARD SUPPLY AIR GRILLE
I: BLANK OFF PLATE TO RESTRICT ANY OSA.
J: FIELD INSTALLED HEATER PACKAGE MODEL EHWA05A-C09 (9KW)

N

FLOOR PLAN
1/4"=1'-0"

ABEL VALIENTE LICENSE No 70128 STATE OF FLORIDA PROFESSIONAL ENGINEER

NO.	DATE	DR	REVISION	CHK	APVD	BY
DSGN	A VALIENTE	K RINER		G SMARR		A VALIENTE

©CH2M HILL 2012. ALL RIGHTS RESERVED.

REUSE OF DOCUMENTS: THIS DOCUMENT, AND THE IDEAS AND DESIGNS INCORPORATED HEREIN, AS AN INSTRUMENT OF PROFESSIONAL SERVICE IS THE PROPERTY OF CH2M HILL AND IS NOT TO BE USED, IN WHOLE OR IN PART, FOR ANY OTHER PROJECT WITHOUT THE WRITTEN AUTHORIZATION OF CH2MHILL.

3011 SW WILLISTON RD
GAINESVILLE, FL 32608
EB0000072 AAC001992
ABEL VALIENTE - PE 70128

SWWRF NITROGEN REMOVAL AND DIGESTER MODIFICATIONS
MANATEE COUNTY UTILITIES
MANATEE COUNTY, FL

CH2MHILL®

BUILDING MECHANICAL

EXISTING BLOWER BUILDING PLAN

ISSUED FOR BID

VERIFY SCALE
BAR IS ONE INCH ON ORIGINAL DRAWING.
0 1"

DATE	DECEMBER 2013
PROJ	457133
DWG	827-M-2001
SHEET	of

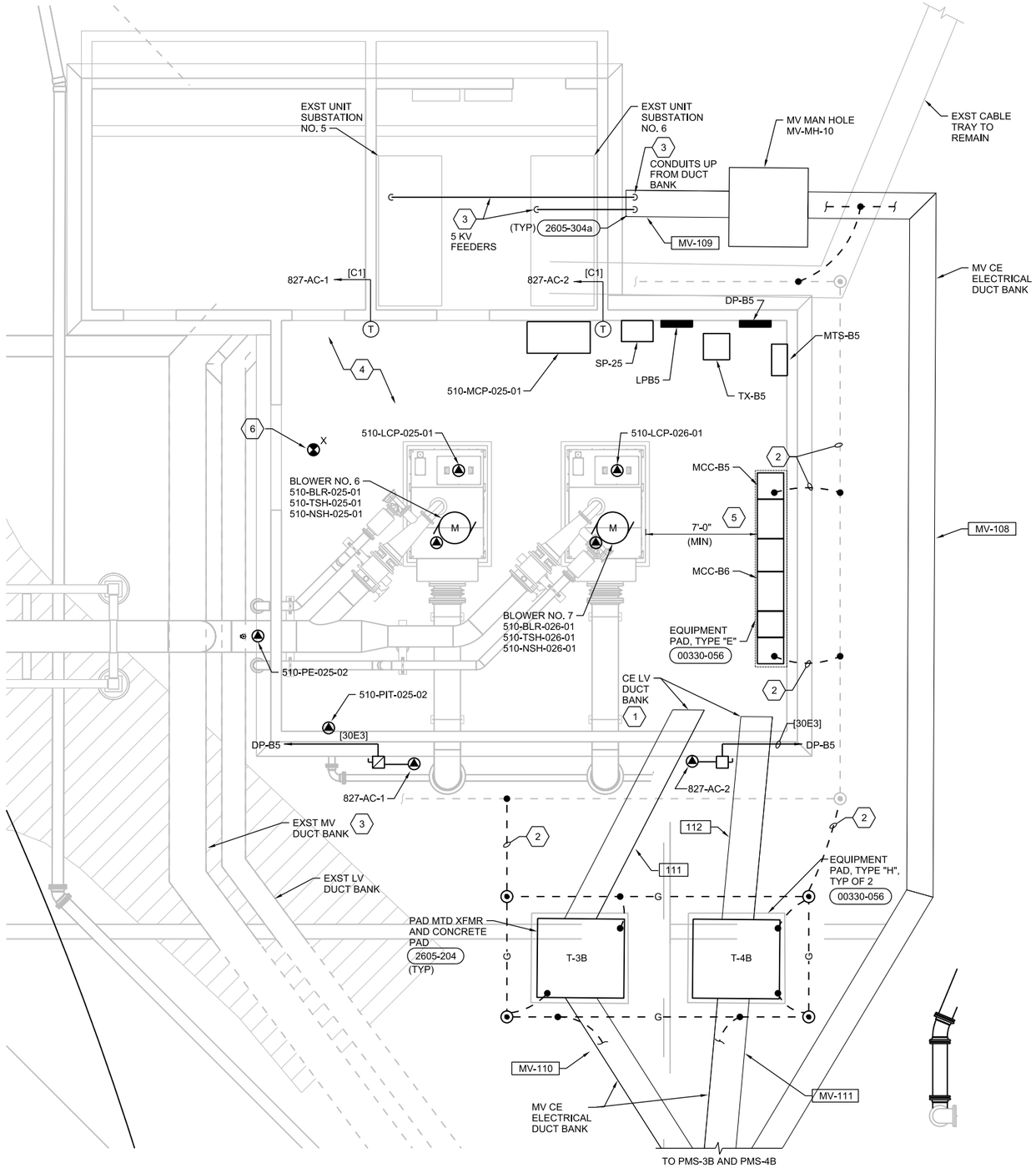

N

PLAN

1/4"=1'-0"

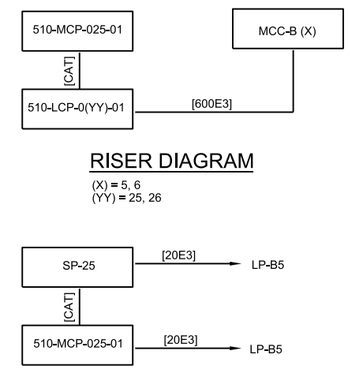

RISER DIAGRAM

(X) = 5, 6
(YY) = 25, 26

RISER DIAGRAM

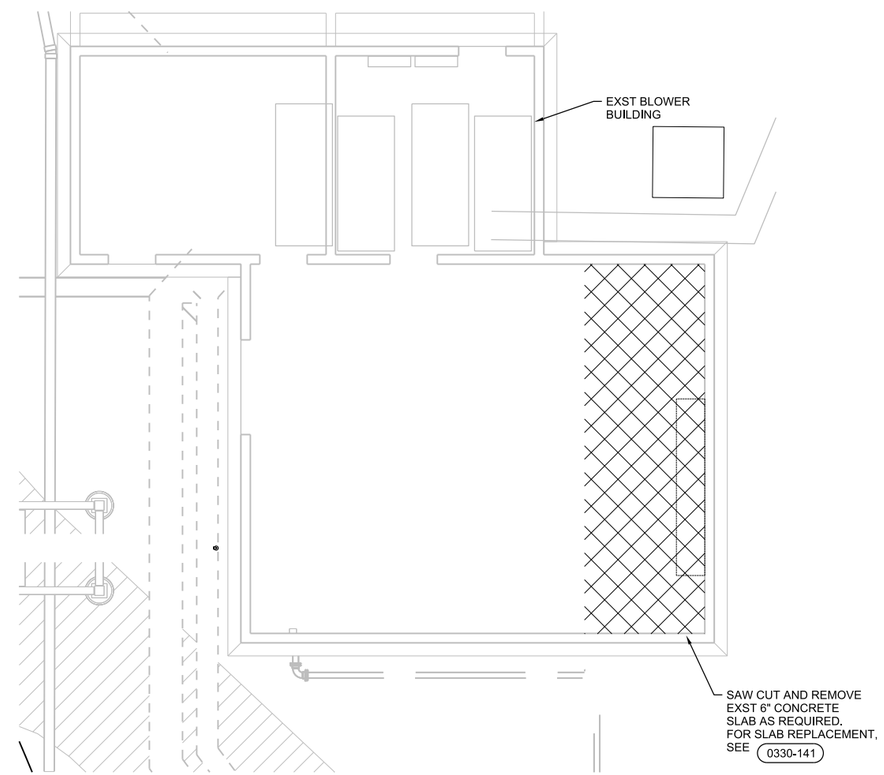

N

DEMOLITION PLAN

3/16"=1'-0"

SHEET KEYNOTES

1. SERVICE CONDUITS TO MCC SHALL BE BOTTOM ENTRY. CONDUITS SHALL ENTER BUILDING VIA CONCRETE ENCASED DUCT BANK. DUCT BANK SHALL PASS BELOW BUILDING FOOTER. CONCRETE ENCASEMENT SHALL EXTEND PAST INSIDE EDGE OF FOOTER.
2. #4/0 BARE TIN-PLATED COPPER GROUND. CONNECT TO EXST BUILDING GROUND LOOP. IF BUILDING GROUND LOOP DOES NOT EXIST, CONTRACTOR SHALL PROVIDE ONE.
3. REPLACE EXST 5KV FEEDERS TO UNIT SUBSTATIONS 5 AND 6. REMOVE EXST FEEDERS AS SHOWN ON 007-E-6001. PROVIDE NEW 5KV FEEDERS FROM PMC-3B AND PMS-4B TO UNIT SUBSTATIONS 6 AND 7 VIA CE DUCT BANK. ROUTE EXPOSED UP FROM DUCT BANK, THEN PENETRATE BUILDING WALL AND ROUTE CONDUITS OVERHEAD TO UNIT SUBSTATIONS.
4. EXISTING LIGHTING AND ASSOCIATED CIRCUITS TO REMAIN.
5. COORDINATE INSTALLATION OF BLOWERS AND MCC TO MAINTAIN A MINIMUM WORKING CLEARENCE OF 7'-0" IN FRONT OF THE MCC PER NEC ATRICAL 110.26 (C)(2)(b).
6. EXIT LIGHT SHALL BE UNSWITCHED AND WIRED TO THE LINE-SIDE OF THE NORMAL LICENSED PROFESSIONAL ENGINEER DAVID C NICHOLSON No 60201 STATE OF FLORIDA

NO.	DATE	REVISION	BY	APVD

DSGN D NICHOLSON | DR D NICHOLSON | CHK M WAYNE | APVD D NICHOLSON

©CH2M HILL 2012. ALL RIGHTS RESERVED.

3011 SW WILLISTON RD
GAINESVILLE, FL 32608
EB0000072 AAC001992
DAVID C NICHOLSON - PE 60201

SWWRF NITROGEN REMOVAL AND DIGESTER MODIFICATIONS
MANATEE COUNTY UTILITIES
MANATEE COUNTY, FL

CH2MHILL®

ELECTRICAL
EXISTING BLOWER BUILDING PLAN

REUSE OF DOCUMENTS: THIS DOCUMENT, AND THE IDEAS AND DESIGNS INCORPORATED HEREIN, AS AN INSTRUMENT OF PROFESSIONAL SERVICE, IS THE PROPERTY OF CH2M HILL AND IS NOT TO BE USED, IN WHOLE OR IN PART, FOR ANY OTHER PROJECT WITHOUT THE WRITTEN AUTHORIZATION OF CH2M HILL.

ISSUED FOR BID

VERIFY SCALE
BAR IS ONE INCH ON ORIGINAL DRAWING.
0 1"

DATE	DECEMBER 2013
PROJ	457133
DWG	827-E-2001
SHEET	of

PANEL: LP-B5 | LOCATION: BLOWER BUILDING 827
SERVICE VOLTAGE: 208Y/120V | PHASE: 3 | WIRE: 4
TOTAL LOAD KVA: 4.8 | BUS SIZE: 100 | MAIN SIZE: 100 | TYPE: CB
REMARKS: INTERGRAL SPD | NEUTRAL: FULL | MOUNTING: SURFACE

LOAD IN KVA A	B	C	CIRCUIT DESCRIPTION	BKR A/P	CKT NO.	CKT NO.	BKR A/P	CIRCUIT DESCRIPTION	LOAD IN KVA A	B	C
0.3			510-FIT-030-01	15/1	1	2	15/1	510-AIT-001-01, 510-AIT-002-01	0.3		
	0.3		510-FIT-030-02	15/1	3	4	15/1	510-AIT-003-01, 510-AIT-004-01		0.3	
		0.3	510-FIT-030-03	15/1	5	6	20/1	SP-25			1.0
0.3			510-FIT-030-04	15/1	7	8					
	1.0		510-MCP-025-01	20/1	9	10					
		1.0	RECPT AT LP-B5	20/1	11	12					
					13	14					
					15	16					
					17	18					
					19	20					
					21	22					
					23	24					
					25	26					
					27	28					
					29	30					
					31	32					
					33	34					
					35	36					
					37	38	30/3	SPD			
					39	40					
					41	42					
0.6	1.3	1.3	TOTAL						0.3	0.3	1.0

PANEL: DP-B5 | LOCATION: BLOWER BUILDING 827
SERVICE VOLTAGE: 480Y/277V | PHASE: 3 | WIRE: 4
TOTAL LOAD KVA: 72.0 | BUS SIZE: 200 | MAIN SIZE: 150 | TYPE: CB
REMARKS: INTREGRAL SPD | NEUTRAL: N/A | MOUNTING: SURFACE | AIC: 42K

LOAD IN KVA A	B	C	CIRCUIT DESCRIPTION	BKR A/P	CKT NO.	CKT NO.	3KR A/P	CIRCUIT DESCRIPTION	LOAD IN KVA A	B	C
10.0			XFMR/PANELBOARD LP-A5	60/3	1	2	15/3	510-FCV-030-01	0.3		
	10.0				3	4				0.3	
		10.0			5	6					0.3
6.4			827-AC-1	30/3	7	8	15/3	510-FCV-030-02	0.3		
	6.4				9	10				0.3	
		6.4			11	12					0.3
6.4			827-AC-2	30/3	13	14	15/3	510-FCV-030-03	0.3		
	6.4				15	16				0.3	
		6.4			17	18					0.3
					19	20	15/3	510-FCV-030-04	0.3		
					21	22				0.3	
					23	24					0.3
					25	26					
					27	28					
					29	30					
					31	32					
					33	34					
					35	36					
					37	38	30/3	SPD			
					39	40					
					41	42					
22.8	22.8	22.8	TOTAL						1.2	1.2	1.2

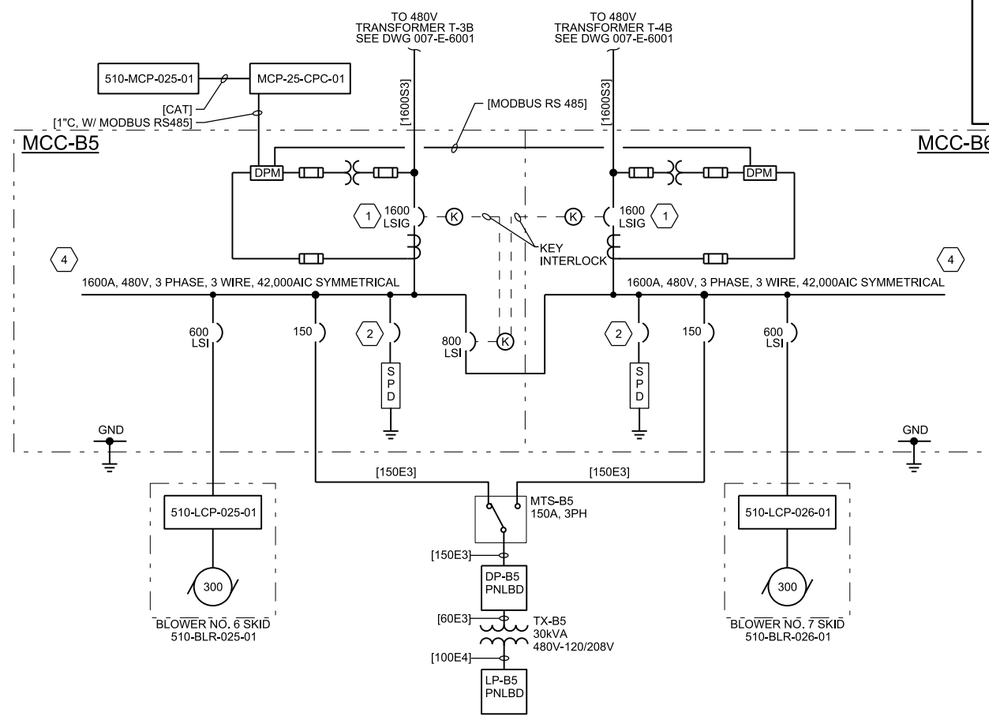

MCC-B5 & B6 ONE-LINE DIAGRAM

NTS

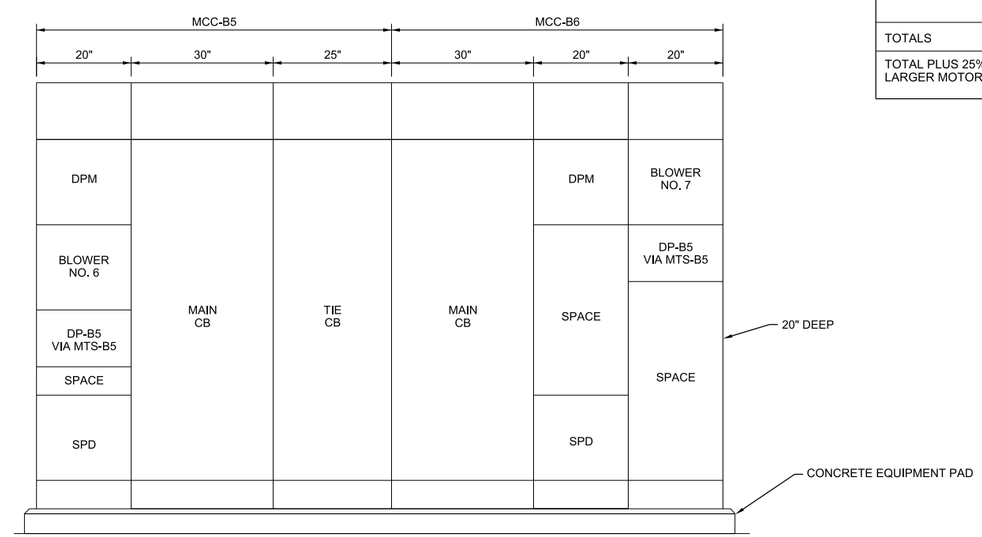

3 MCC-B5 AND MCC-B6 FRONT ELEVATION

NTS

SHEET KEYNOTES

1. SERVICE ENTRANCE LABELED.
2. SIZE BY MANUFACTURER.
3. REFER TO MCC FRONT ELEVATION FOR SPACE CIRCUIT BREAKERS AND STARTER REQUIREMENTS.
4. PROVIDE PROVISIONS FOR FUTURE BUS EXPANSION.

MCC-B5 CONNECTED LOAD	
DESCRIPTION	AMPS
510-LCP-025-01	361
DP-B5	86
TOTALS	447
TOTAL PLUS 25% OF LARGER MOTOR	538

MCC-B6 CONNECTED LOAD	
DESCRIPTION	AMPS
510-LCP-026-01	361
TOTALS	361
TOTAL PLUS 25% OF LARGER MOTOR	451

DAVID C NICHOLSON LICENSE No 60201 STATE OF FLORIDA PROFESSIONAL ENGINEER

NO.	DATE	REVISION	BY	APVD
DSGN	N ADAMS	DR N ADAMS	CHK M WAYNE	APVD D NICHOLSON

©CH2M HILL 2012. ALL RIGHTS RESERVED.

3011 SW WILLISTON RD
GAINESVILLE, FL 32608
EB000072 AAC001992
DAVID C NICHOLSON - PE 60201

SWWRF NITROGEN REMOVAL AND DIGESTER MODIFICATIONS
MANATEE COUNTY UTILITIES
MANATEE COUNTY, FL

REUSE OF DOCUMENTS: THIS DOCUMENT, AND THE IDEAS AND DESIGNS INCORPORATED HEREIN, AS AN INSTRUMENT OF PROFESSIONAL SERVICE, IS THE PROPERTY OF CH2M HILL AND IS NOT TO BE USED, IN WHOLE OR IN PART, FOR ANY OTHER PROJECT WITHOUT THE WRITTEN AUTHORIZATION OF CH2M HILL.

CH2MHILL®

ELECTRICAL
EXISTING BLOWER BUILDING
MCC-B5 AND MCC-B6
ONE LINE DIAGRAM & ELEVATION

VERIFY SCALE
BAR IS ONE INCH ON ORIGINAL DRAWING.
0 1"

DATE	DECEMBER 2013
PROJ	457133
DWG	827-E-6001
SHEET	of

ISSUED FOR BID