LIFT STATION 12A ELECTRICAL PUMP & VFD REHABILIATION
MANATEE COUNTY

PROJ. NO. 01024-0181
MARCH 17, 2021
ISSUED FOR BID

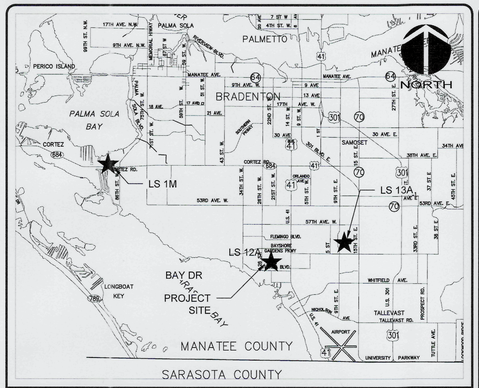

VICINITY MAP NOT TO SCALE

PROJECT NAME: LIFT STATION 12A ELECTRICAL PUMP & VFD REHABILIATION

OWNER/DEVELOPER:
2007 BAY DRIVE
BRADENTON, FLORIDA
34207
EMAIL

Manatee County FLORIDA

McKIM&CREED
1365 Hamlet Avenue
Clearwater, Florida 33756
Phone: (727) 442-7196, Fax: (727) 461-3827

CA Lic. No. 29588
www.mckimcreed.com

PROJECT INFORMATION

SITE MAP SCALE: 1" = 200'

SHEET INDEX TABLE

Sheet Number	Sheet Title
GENERAL	
G0.00	COVER SHEET
G0.01	GENERAL NOTES
G0.02	CIVIL-MECHANICAL- LEAD SHEET
CIVIL: CIVIL SITE	
C0.00	SITE PLAN
DEMOLITION	
D0.00	DEMOLITION OF EQUIPMENT I
D0.01	DEMOLITION OF EQUIPMENT II
MECHANICAL	
M0.00	PROPOSED PUMPS AND PIPING I
M0.01	PROPOSED PUMPS AND PIPING II
STRUCTURAL	
S00.0	STRUCTURAL GENERAL NOTES, DESIGN LOADS, CRITERIA & LEGEND
S1.00	LIFT STA. MODS & ELECTR. BLDG. FDN. PLAN, SECTIONS & DETAILS
S1.01	LIFT STA. MODS & ELECTR. BLDG. FRMG. PLAN, SECTIONS & DETAILS
S1.02	LIFT STA. MODS ADD'L SECTIONS & DETAILS
ELECTRICAL	
E0.00	SYMBOLS, ABBRIVIATIONS AND NOTES
E0.01	SYMBOLS
E0.02	SYMBOLS
E1.00	DEMOLITION PLAN
E1.01	SINGLE LINE DIAGRAM
E1.02	ELECTRICAL SITE PLAN
E1.03	ELECTRICAL PARTIAL SITE PLAN
E1.04	ELECTRICAL BUILDING POWER PLAN
E1.05	ELECTRICAL BUILDING LAYOUT
E1.06	GROUNDING AND LIGHTNING PROTECTION PLAN
E1.07	MCB, ATS AND MCC ELEVATIONS
E1.08	LIGHTING PLAN
E1.09	ELECTRICAL INTERCONNECTION DIAGRAM
E1.10	PANEL BOARD SCHEDULES
E1.11	DETAILS
E1.12	ELECTRICAL CONTROLS SCHEMATICS
INSTRUMENTATION	
I0.00	INSTRUMENTATION SYMBOL SHEET 1
I0.01	INSTRUMENTATION SYMBOL SHEET 2
I1.00	PROCESS AND INSTRUMENT DIAGRAM
I1.01	CONTROL PANEL

811 Know what's below. Call before you dig.

SHEET INDEX

PROJ. NO. 01024-0181 LIFT STATION 12A ELECTRICAL PUMP & VFD REHABILIATION

SUBMITTAL DATE: MARCH 17, 2021

1 GENERAL NOTES

1. THE CONTRACTOR SHALL REVIEW AND VERIFY ALL LAYOUTS, DIMENSIONS AND ELEVATIONS ON THE PLANS WITH FINAL APPROVED EQUIPMENT DRAWINGS AS WELL AS ALL TECHNICAL SPECIFICATIONS PRIOR TO STARTING CONSTRUCTION AND SHOULD DISCREPANCIES OCCUR, THE CONTRACTOR SHALL NOTIFY THE ENGINEER TO OBTAIN THE ENGINEERS CLARIFICATION BEFORE COMMENCING WITH CONSTRUCTION.
2. THE CONTRACTOR SHALL COORDINATE ALL RELATED DISCIPLINE DRAWINGS TO ENSURE ACCURATE INSTALLATION OCCURS.
3. THESE PLANS ARE SOLELY TO ASSIST THE CONTRACTOR IN ASSESSING THE NATURE AND EXTENT OF THE EXISTING CONDITIONS WHICH MAY BE ENCOUNTERED DURING THE COURSE OF THE WORK. CONTRACTORS ARE DIRECTED TO CONDUCT WHATEVER INVESTIGATION THEY DEEM NECESSARY. PRIOR TO BIDDING, TO DETERMINE THE ACTUAL CONDITIONS THAT WILL BE ENCOUNTERED.
4. LOCATIONS, ELEVATIONS AND DIMENSIONS OF EXISTING UTILITIES, STRUCTURES, AND OTHER FEATURES ARE SHOWN BASED ON THE BEST INFORMATION AVAILABLE AT THE TIME OF PREPARATION OF THESE PLANS BUT DO NOT PURPORT TO BE ABSOLUTELY CORRECT. THE CONTRACTOR SHALL VERIFY, PRIOR TO CONSTRUCTION, THE LOCATIONS, ELEVATIONS, AND DIMENSIONS OF ALL EXISTING UTILITIES, STRUCTURES, AND OTHER FEATURES (WHETHER OR NOT SHOWN ON THE PLANS) AFFECTING HIS WORK.
5. THE CONTRACTOR SHALL REVIEW AND VERIFY ALL DIMENSIONS ON THE PLANS AND REVIEW ALL FIELD CONDITIONS THAT MAY AFFECT CONSTRUCTION. SHOULD DISCREPANCIES OCCUR, THE CONTRACTOR SHALL NOTIFY THE ENGINEER TO OBTAIN WRITTEN CLARIFICATION BEFORE COMMENCING WITH CONSTRUCTION.
6. THE CONTRACTOR SHALL PROTECT ALL EXISTING STRUCTURES, STORM DRAINS, SEWERS, UTILITIES, AND OTHER FACILITIES IN THE CONSTRUCTION AREA. THE CONTRACTOR SHALL REPAIR ANY DAMAGES DUE TO HIS CONSTRUCTION ACTIVITIES AT NO ADDITIONAL COST TO THE OWNER.
7. THE CONTRACTOR SHALL PROVIDE CERTIFIED RECORD DRAWINGS AS OUTLINED IN THE SPECIFICATIONS. RED-LINE DRAWINGS SHALL BE CURRENT WITH EACH PAY APPLICATION SUBMITTED AND WILL BE CHECKED AS PART OF THE PAY APPLICATION REVIEW PROCESS. PAYMENT WILL NOT BE MADE TO CONTRACTOR WITHOUT APPROVED RED-LINE DRAWINGS.
8. ALL PROPOSED WORK SHALL BE COORDINATED WITH MANATEE COUNTY UTILITIES DEPARTMENT AT LEAST TWO WEEKS IN ADVANCE OF PROPOSED CONSTRUCTION.
9. UNLESS OTHERWISE INDICATED OR APPROVED, ALL BELOW GROUND DUCTILE IRON AND PVC PIPE SHALL HAVE PUSH-ON OR MECHANICAL JOINTS, AND ALL ABOVE GROUND DUCTILE IRON PIPE SHALL HAVE FLANGED JOINTS. ALL JOINTS SHALL BE FULLY RESTRAINED.
10. WATER SHALL NOT BE PERMITTED IN EXCAVATIONS AND TRENCHES DURING CONSTRUCTION. DEWATERING IS REQUIRED TO A MINIMUM OF 18" BELOW BOTTOM OF EXCAVATION.
11. THE CONTRACTOR SHALL NOT ALLOW ANY DISCHARGE OF WASTEWATER TO LANDS AND/OR ADJACENT WATER BODIES OR STORM DRAINS. ANY LEAKAGE MUST BE CONTAINED AND TRANSFERRED BY THE CONTRACTOR TO THE PLANT DRAIN PUMP STATION AT THE WASTEWATER TREATMENT PLANT.
12. ALL EXPOSED NEW PIPING SHALL BE PAINTED WITH DESIGNATED COLORS ASSOCIATED WITH THEIR USAGE AS PROVIDED IN THE SPECIFICATIONS.
13. ALL NEW PIPELINES SHALL BE FLUSHED, PRESSURE TESTED, AND APPROVED PRIOR TO TIE-INS TO EXISTING FACILITIES. THE CONTRACTOR WILL BE ALLOWED TO USE TEMPORARY PLUGS FOR PRESSURE TESTING.
14. ALL CONCRETE THRUST BLOCKS INSTALLED FOR TESTING PURPOSES AND NOT REQUIRED FOR THE PIPELINE SHALL BE REMOVED AND DISPOSED OF BY THE CONTRACTOR PRIOR TO FINAL ACCEPTANCE.
15. CONTRACTOR SHALL PROVIDE PROTECTIVE MATTING, FUEL CONTAINMENT AND ALL OTHER MATERIALS, EQUIPMENT AND LABOR TO PROTECT THE STAGING AREA DURING CONSTRUCTION.
16. CONTRACTOR SHALL, PRIOR TO BEGINNING CONSTRUCTION, SUBMIT A "FUELING SPILL PREVENTION PLAN" THAT SHALL CLEARLY INDICATED HOW FUEL SPILLS WILL BE PREVENTED WHEN FUELING BOTH WITHIN AND OUTSIDE OF THE STAGING AREA.
17. CONTRACTOR SHALL EMPLOY A PROFESSIONAL SURVEYOR, LICENSED IN THE STATE OF FLORIDA TO PERFORM CONSTRUCTION STAKING IN ACCORDANCE WITH RULE 61G17-6.004 (3) OF THE FLORIDA ADMINISTRATIVE CODE.
18. JOINT RESTRAINT SHALL BE INSTALLED AS NECESSARY TO PREVENT MOVEMENT OF EXISTING UNRESTRAINT PRESSURE PIPE AT ALL TIE-IN LOCATIONS WHETHER SPECIALLY IDENTIFIED ON THE PLANS OR NOT.
19. ALL WORK, EQUIPMENT AND MATERIALS SHALL MEET OR EXCEED CURRENT MANATEE COUNTY STANDARDS, UNLESS OTHERWISE STATED IN CONTRACT DOCUMENTS.

RESTORATION AND MISCELLANEOUS NOTES:

1. THE CONTRACTOR SHALL PROVIDE AN ASPHALT PATCH FOR TRENCH AREAS CONSTRUCTED IN EXISTING ROADWAYS UNLESS INDICATED OTHERWISE ON THE DRAWINGS. ADJUST ALL CASTINGS TO MATCH NEW PAVEMENT SURFACE.
2. WHERE SURFACE IMPROVEMENTS ARE TO BE REPLACED IN KIND, AS INDICATED ON THE DRAWINGS, THE CONTRACTOR SHALL REPLACE ALL EXISTING PAVING, STABILIZED EARTH, CURBS, SIDEWALKS, FENCES, LANDSCAPING AND OTHER IMPROVEMENTS WITH THE SAME OR BETTER TYPE OF MATERIAL THAT WAS REMOVED DURING CONSTRUCTION OR AS DIRECTED BY THE ENGINEER.
3. ALL RESTORATION WORK PERFORMED THROUGHOUT THE PROJECT SHALL CONFORM TO EXISTING LINES AND GRADES UNLESS OTHERWISE NOTED.
4. ALL EXISTING FENCES DISTURBED DURING CONSTRUCTION SHALL BE REPLACED AND REINSTALLED BY THE CONTRACTOR AT NO ADDITIONAL COST TO THE OWNER UNLESS SHOWN TO BE REMOVED ON CONSTRUCTION PLANS.
5. CONTRACTOR SHALL RESTORE GRADE PRECONSTRUCTION ELEVATIONS UNLESS OTHERWISE NOTED.

6. SOIL EROSION & SEDIMENTATION CONTROL NOTES:

1. ALL SOIL EROSION AND SEDIMENTATION CONTROL MEASURES SHALL BE IN PLACE PRIOR TO THE START OF ANY CONSTRUCTION, DEMOLITION, DEWATERING, OR MOBILIZATION ACTIVITIES, MAINTAINED THROUGHOUT CONSTRUCTION AND SHALL REMAIN IN PLACE UNTIL WORK IS COMPLETE.
2. CONTRACTOR SHALL FOLLOW BEST MANAGEMENT PRACTICES THROUGHOUT DEMOLITION AND CONSTRUCTION.
3. HAY BALES AND/OR SILT SCREENS SHALL BE INSTALLED ADJACENT TO THE WORK AREAS TO PREVENT SEDIMENT TRANSPORT PRIOR TO THE COMMENCEMENT OF WORK.
4. INLET PROTECTION SHALL BE PLACED AT ALL INLETS IN OR ADJACENT TO THE PROJECT AREA.
5. AS SOON AS PRACTICAL, ALL DRESSED SLOPES AND DISTURBED AREAS SHALL BE SODDED OR SEEDED AND MULCHED TO PREVENT EROSION.
6. NO EXCAVATION SHALL EXTEND BELOW THE DEPTHS/ELEVATIONS SHOWN ON THE DRAWINGS OR IN THE SPECIFICATIONS WITHOUT PRIOR APPROVAL.
7. CONTRACTOR SHALL PREPARE AND SUBMIT A STORM WATER POLLUTION PLAN (SWPPP) FOR REVIEW AND APPROVAL PRIOR TO COMMENCEMENT OF ANY CONSTRUCTION ACTIVITIES AND PROVIDE APPROVED FDEP NOT TO COUNTY.
8. CONTRACTOR SHALL PREPARE AND SUBMIT A DISPOSAL PLAN FOR EXCAVATION MATERIAL INCLUDING THE LOCATION OF DISPOSAL SITE(S) AND DISPOSAL PLANS SHOWING APPLICABLE BEST MANAGEMENT PRACTICES FOR REVIEW AND APPROVAL PRIOR TO ANY EARTHWORK ACTIVITIES.

2 PLANT WORK NOTES

1. CONTRACTOR SHALL MAINTAIN A CLEAR PATH FOR ALL SURFACE WATER DRAINAGE STRUCTURES AND DITCHES DURING CONSTRUCTION.
2. ALL PIPE LINES SHALL HAVE A MINIMUM COVER OF 36" UNLESS OTHERWISE NOTED OR DIRECTED.
3. NOTE; ALL VAULTS, MANHOLES, INLET STRUCTURES, BASINS, WET WELLS ETC. SHALL BE CONSIDERED "CONFINED SPACE ENTRY" AND SHALL BE MARKED AS SUCH BY MEANS OF STAMPING MANHOLE COVERS AND PLACING PERMANENT SIGNAGE ON THE VAULTS, BASINS OR STRUCTURES WARNING OF THE "CONFINED SPACE ENTRY" CONDITION.
4. CONTRACTOR SHALL BE RESPONSIBLE FOR ALL PIPE SUPPORTS WHETHER SHOWN ON THE CONTRACT DOCUMENTS OR NOT. PIPE SUPPORTS SHALL BE INSTALLED PER MANUFACTURER'S RECOMMENDATIONS FOR SPACING AND SUPPORT. ADDITIONALLY, PROVIDE SUPPORT WHERE ABOVE GRADE PIPING CHANGES DIRECTION, IS ADJACENT TO FLANGED VALVES OR OTHER APPURTENANCES OR AT EQUIPMENT CONNECTIONS AND HEAVY FITTINGS.
5. NOTE: ALL NON-POTABLE/PLANT WATER USERS MUST BE CLEARLY LABELED AS "NON-POTABLE", NOT FOR HUMAN CONSUMPTION.
6. PLANT TRAFFIC FLOW SHALL BE MAINTAINED AT ALL TIMES DURING CONSTRUCTION. IF TRAFFIC FLOW IS TO BE RE-DIRECTED, CONTRACTOR SHALL COORDINATE TEMPORARY TRAFFIC FLOW PATTERNS WITH OWNER AND ENGINEER.
7. CONTRACTOR SHALL RESTRAIN ALL UNDERGROUND PRESSURE PIPING AT ALL FITTINGS AND PIPE JOINTS.

3 EXISTING UTILITY NOTES

1. UNDERGROUND UTILITIES SHOWN ON THE PLANS HAVE BEEN MADE AVAILABLE FROM VARIOUS ENTITIES THAT MAY INCLUDE UTILITY OWNERS, SURVEY SUBSURFACE UTILITY INVESTIGATIONS (SUE), RECORD DRAWINGS AND OTHERS. THIS INFORMATION MAY NOT ALL-INCLUSIVE AND THE CONTRACTOR IS ADVISED THAT ADDITIONAL UNDERGROUND UTILITIES AND CABLES INVESTIGATION MAY BE NECESSARY PRIOR TO STARTING CONSTRUCTION. THE CONTRACTOR SHALL NOTIFY THE ENGINEER OF RECORD IMMEDIATELY OF ALL POTENTIAL CONFLICTS.
2. THE CONTRACTOR SHALL FIELD VERIFY SIZE, DEPTH, LOCATION AND MATERIAL OF ALL UNDERGROUND UTILITIES PRIOR TO THE START OF CONSTRUCTION.
3. THE CONTRACTOR SHALL CAREFULLY SUPPORT AND PROTECT ANY UTILITIES, STRUCTURES, POWER POLES, PIPE LINES AND CONDUITS WHICH MAY BE ENCOUNTERED DURING COMPLETION OF THE WORK AT NO ADDITIONAL COST TO THE OWNER. THE CONTRACTOR SHALL APPLY NECESSARY MEANS TO PROTECT EXISTING UTILITIES DURING CONSTRUCTION . ANY DAMAGE RESULTING FROM THE CONTRACTOR'S OPERATIONS SHALL BE REPAIRED BY THE CONTRACTOR OR UTILITY OWNER (WHERE REQUIRED) TO THE SATISFACTION OF THE ENGINEER AND UTILITY OWNER AT THE CONTRACTOR'S EXPENSE.

4 AS NEEDED NOTES

1. –

REV.NO.	DESCRIPTION	DATE
0	ISSUED FOR BID	MAR 2021

REVISIONS

SEAL
AUBREY ARMAND HAUDRICOURT LICENSE PROFESSIONAL ENGINEER
No 66861
STATE OF FLORIDA
3-17-21
AUBREY A. HAUDRICOURT, P.E.
No. 66861

McKIM&CREED
1365 Hamlet Avenue
Clearwater, Florida 33756
Phone: (727) 442-7196, Fax: (727) 461-3827
CA Lic. No. 29588
www.mckimcreed.com

Manatee County FLORIDA

LIFT STATION 12A ELECTRICAL PUMP & VFD REHABILITATION

GENERAL

GENERAL NOTES

PROJ. START DATE:	2020. JUN
MCE PROJ. #	01024-0181
DRAWN	JG
DESIGNED	AAH
CHECKED	MAC
PROJ. MGR.	AAH

SCALE
HORIZONTAL: N/A
VERTICAL: TBD

G0.01
DRAWING NUMBER
0
REVISION

STATUS:
ISSUED FOR BID

1 ABBREVIATIONS

1SFD	1 STORY FRAMED DWELLING
1SBKBUS	1 STORY BRICK BUSINESS
A	AIR
AC	ASBESTOS CEMENT
AL OR ALUM	ALUMINUM
ARV	AIR RELEASE VALVE
ASPH	ASPHALT
BC	BACK OF CURB
BFV	BUTTERFLY VALVE
BK	BRICK
BLD	BLIND
BO	BOLLARD
BOV	BLOW OFF VALVE
BV	BALL VALVE
CATV	CABLE TELEVISION
CB	CATCH BASIN
C&G	CURB AND GUTTER
CHN	CHAIN
CI	CURB INLET
C/L, ℄	CENTERLINE
CMP	CORRUGATED METAL PIPE
CMU	CONCRETE MASONRY UNIT
CO	CLEAN OUT
CON	CONCENTRIC
CONC	CONCRETE
CPLG	COUPLING
CPP	CORRUGATED PLASTIC PIPE
CS	COMPOST SOCK
CSF	COMBO SILT / TREE PROTECTION FENCE
CV	CHECK VALVE
CWTD	CLEAN WATER TEMPORARY DIVERSION
D	DRAIN
DI	DROP INLET / DUCTILE IRON
DIP	DUCTILE IRON PIPE
DUCT	DUCT BANK
D/W	DRIVE WAY
DWG	DRAWING
EL OR ELEV	ELEVATION
EOG	EDGE OF GRAVEL
EOI	END OF INFORMATION
EP, EOP	EDGE OF PAVEMENT
EW	EYEWASH
EX	EXISTING
EXP	EXPANSION
LP	LIGHT POLE
LT	LIGHT
FCA	FLANGE COUPLING ADAPTER
FD	FLOOR DRAIN
FDC	FIRE DEPARTMENT CONNECTOR
FFE	FINISHED FLOOR ELEVATION
FH	FIRE HYDRANT
FHA	FIRE HYDRANT ASSEMBLY
FIN	FINISHED
FLG	FLANGE
FLEX	FLEXIBLE
FLR	FLOOR
FM	FORCE MAIN
FRP	FIBERGLASS REINFORCED PIPE
FO	FIBER OPTIC
FOT	FLAT ON TOP
GL	GUTTER LINE
GM	GAS METER
GRAV	GRAVEL
GTS	GAS TEST STATION
GV	GAS VALVE
GV	GATE VALVE
GW	GUY WIRE
HB	HOSE BIB
HB	HOT BOX
HDPE	HIGH-DENSITY POLYETHYLENE
HP	HIGH POINT
HWL	HIGH WATER LEVEL
INV	INVERT ELEVATION
IPF	IRON POST FOUND
JB	JUNCTION BOX
JT	JOINT
LF	LINEAR FEET
LOD	LIMITS OF DISTURBANCE
LP	LOW POINT
LR	LONG RADIUS
LSA	LANDSCAPE AREA
LWL	LOW WATER LEVEL
MB	MAIL BOX
MAX	MAXIMUM
MH	MANHOLE
MIN	MINIMUM
MJ	MECHANICAL JOINT
MOV	MOTOR OPERATED VALVE
MTL	METAL
N.C.	NORMALLY CLOSED
N.O.	NORMALLY OPEN
NIC	NOT IN CONTRACT
NWL	NORMAL WATER LEVEL
OHE/OE	OVER HEAD ELECTRIC
O/F	OVERFLOW
OU	OVER HEAD UTILITIES
PE	PLAIN END
PIV	POST INDICATOR VALVE
POLY	POLYMER
PP	POWER POLE
PRV	PRESSURE REDUCING VALVE
PTFE	POLYTETRAFLUOROETHYLENE
PV	PLUG VALVE
PVC	POLY VINYL CHLORIDE
PW	POTABLE WATER
RCP	REINFORCED CONCRETE PIPE
REC	PER RECORD
RED	REDUCER

1 ABBREVIATIONS CONTINUED

RFCA	RESTRAINED FLANGE COUPLING ADAPTER
RJ	RESTRAINED JOINT
RK	ROCK
R/W, ROW	RIGHT OF WAY
S	SIGN
SDMH	STORM DRAIN MANHOLE
SF	SILT FENCE
SS	SANITARY SEWER
S.S.	STAINLESS STEEL
SSF	SUPER / HIGH HAZARD SILT FENCE
SSMH	SANITARY SEWER MANHOLE
STA	STATION
SUE	SUBSURFACE UTILITY ENGINEERING
S/W	SIDE WALK
SVC	SERVICE
TBM	TEMPORARY BENCH MARK
TC	TERRA COTTA
TLP	TRAFFIC LIGHT POLE
TOB	TOP OF BANK
TOC	TOP OF CONCRETE
TOG	TOP OF GRATING
TOS	TOP OF SLAB
TOW	TOP OF WALL
TH	TEST HOLE
TPF	TREE PROTECTION FENCE
TSBOX	TRAFFIC SIGNAL BOX
TYP	TYPICAL
UNO	UNLESS NOTED OTHERWISE
UNK	UNKNOWN
VAR	VARIABLE
VCP	VITRIFIED CLAY PIPE
WD	WOOD
WL	WATER LINE
WM	WATER METER
WV	WATER VALVE
XP	CROSS LIGHT POLE
WWF	WELDED WIRE FABRIC
YI	YARD INLET

2 EXISTING SYMBOL LEGEND

DESCRIPTION	SYMBOL
11.25° HORIZONTAL BEND	
22.50° HORIZONTAL BEND	
45° HORIZONTAL BEND	
90° HORIZONTAL BEND	
AC UNIT	AC
BENCH MARK	
TEMP. BENCH MARK	
BLOW OFF VALVE	
BOLLARD	BO
TEST BORE HOLE LOCATION	B-#
CABLE TV PEDISTAL	
CATCH BASIN	
CLEAN OUT	CO
CONCRETE MONUMENT FOUND	CMF
CONTROL POINT	
CROSS	
CURB INLET	
ELECTRIC BOX	
ELECTRIC MANHOLE	E
END OF INFORMATION	
FLAG POLE	FP
GAS METER	GM
GUY POLE	
GUY WIRE	
HANDHOLE	
HYDRANT	
IRON POST FOUND	IPF
IRON ROD FOUND	IPF
LIGHT POLE	LP
MAIL BOX	MB
MONITOR WELL	
POWER POLE	PP
WATER MANHOLE	W
PK FOUND	PKF
RAIL ROAD SPIKE	RRSPIKE
SANITARY SEWER MANHOLE	S
SHRUB	
SIGN	
STORM DRAIN MANHOLE	D
TAPPING SLEEVE AND VALVE	
TEE	
TELEPHONE MANHOLE	T
TELEPHONE PEDESTAL	
TRAFFIC SIGNAL BOX	
TRANSFORMER	
DECIDUOUS TREE	
PINE TREE	
UTILITY POLE	
VALVE	
WATER METER	M
WATER WELL	W
YARD HYDRANT	

3 EXISTING LINE LEGEND

DESCRIPTION	LINETYPE
UNDERGROUND CABLE TV	TV
UNDERGROUND PER RECORD CABLE TV	TV(R)
UNDERGROUND ELECTRIC	E
PER RECORD UNDERGROUND ELECTRIC	E(R)
UDERGROUND FIBER OPTIC	FO
PER RECORD UNDERGROUND FIBER OPTIC	FO(R)
SANITARY SEWER FORCEMAIN	FM
PER RECORD SANITARY SEWER FORCE MAIN	FM(R)
UNDERGROUND GAS	G
UNDERGROUND PER RECORD GAS	G(R)
OVER HEAD UTILITIES	OU
RECLAIMED WATER LINE	R
PER RECORD RECLAIMED WATER LINE	R(R)
GRAVITY SANITARY SEWER	SS
PER RECORD GRAVITY SANITARY SEWER	SS(R)
STORM DRAINAGE	
UNDERGROUND TELEPHONE	T
UNDERGROUND PER RECORD TELEPHONE	T(R)
UNDERGROUND UNKNOWN	U
WATER LINE	W
PER RECORD WATER LINE	W(R)
FENCE	
GUARD RAIL	
BACK OF CURB	
EASEMENT	
EDGE OF GRAVEL	
EDGE OF PAVEMENT	
PROPERTY LINE	
RIGHT OF WAY	
ROAD CENTER LINE	
100 YEAR FLOODPLAIN	100FP
DITCH ℄	
MAJOR CONTOUR	
MINOR CONTOUR	
RIPARIAN BUFFER ZONE 1	Z1
RIPARIAN BUFFER ZONE 2	Z2
TOP OF BANK	
TREELINE	
WATERCOURSE ℄	
WETLAND BOUNDARY	WB

4 PROPOSED SYMBOL LEGEND

DESCRIPTION	SYMBOL
11.25° HORIZONTAL BEND	
22.50° HORIZONTAL BEND	
45° HORIZONTAL BEND	
90° HORIZONTAL BEND	
VERTICAL BEND	
AIR RELEASE VALVE	A
VALVE	
BLOWOFF VALVE	
HYDRANT	
YARD HYDRANT	
CROSS	
TEE	
TAPPING SLEEVE AND VALVE	
REDUCER	
CAP/PLUG	
POTABLE WATER SERVICE METER	
RECLAIMED WATER SERVICE METER	
EXISTING UTILITY SERVICE RECONNECTION	
CONCENTRIC SANITARY SEWER MANHOLE	
ECCENTRIC SANITARY SEWER MANHOLE	
FLAT TOP SANITARY SEWER MANHOLE	
CLEAN OUT	
ARC FILTER	
CHECK DAM	
INLET PROTECTION	
PIPE INLET PROTECTION	
SILT FENCE OUTLET	
WATTLE	

5 PROPOSED LINE LEGEND

DESCRIPTION	LINETYPE
PERMANENT EASEMENT	
TEMPORARY EASEMENT	
SANITARY SEWER FORCE MAIN	FM
RECLAIMED WATER LINE	R
GRAVITY SANITARY SEWER	SS
WATER LINE	W
TO BE ABANDONED	
DIVERSION DITCH	
LIMITS OF DISTURBANCE/CLEARING LIMITS	LOD
COMBINATION SILT FENCE/TREE PROTECTION	CSF
TEMPORARY SILT FENCE	SF
TEMPORARY SUPER SILT FENCE	SSF
TEMPORARY TREE PROTECTION FENCE	TPF
COMPOST SOCK	CS
PERMANENT FENCE	
GUARD RAIL	

6 PROFILE LINE LEGEND

DESCRIPTION	LINETYPE
EXISTING GRADE PAVEMENT PROFILE	
EXISTING GRADE GROUND PROFILE	
PROPOSED GRADE PROFILE	
THEORETICAL 1:1 SLOPE	
WETLAND CROSSING	

7 AREA LEGEND

WETLANDS	
RIP-RAP	
TEMP. SLOPE STABILIZATION	
STRAW WITH NET LINER	

8 PROCESS ABBREVIATIONS

A	PROCESS AIR
ALUM	WTP ALUM SLUDGE
AS	ACTIVATED SLUDGE
BW	BACKWASH
BWD	BACKWASH DRAIN
BWS	BACK WASH SUPPLY
BWW	BACK WASH WASTE
D	DRAIN
EXP	EXPANSION
FA	FOUL AIR
FE	FINAL EFFLUENT
FI	FILTER INFLUENT
FFM	FILTRATE FORCE MAIN
FTD	FILTER DRAIN
FTE	FILTER EFFLUENT
GR	GRIT
GV	GATE VALVE
HWR	HOT WATER RETURN
HWS	HOT WATER SUPPLY
IFM	INFLUENT FORCE MAIN
ML	MIXED LIQUOR
NAOCL	SODIUM HYPOCHLORITE
NAOH	SODIUM HYDROXIDE (CAUSTIC SODA)
NG	NATURAL GAS
NPW	NON-POTABLE WATER
NRCY	NITRIFIED RECYCLE
PD	PROCESS DRAIN
PE	PRIMARY EFFLUENT
PS	PRIMARY SLUDGE
PTE	PRELIMINARY TREATMENT EFFLUENT
PTFE	POLYTETRAFLUOROETHYLENE
PW	POTABLE WATER
RAS	RETURN ACTIVATED SLUDGE
RW	RAW WASTEWATER
SBR	SEQUENCING BATCH REACTOR
SD	STORM DRAIN
SPD	SUMP PUMP DISCHARGE
SR	SCRUBBER RECIRCULATION
SRD	SCRUBBER RECIRCULATION DISCHARGE
SRP	SCRUBBER RECIRCULATION PUMP
SRS	SCRUBBER RECIRCULATION SUCTION
SUP	DIGESTER SUPERNATANT
SW	SEAL WATER
UV	ULTRAVIOLET
WAS	WASTE ACTIVATED SLUDGE

9 MECHANICAL SYMBOLS

VALVE SYMBOL	DESCRIPTION
	BUTTERFLY VALVE
	CHECK VALVE
	GATE VALVE
	PLUG VALVE
	BALL VALVE
	GLOBE VALVE

10 GENERAL NOTES

GENERAL NOTES:

1. THE CONTRACTOR SHALL REVIEW AND VERIFY ALL LAYOUTS, DIMENSIONS AND ELEVATIONS ON THE PLANS WITH FINAL APPROVED EQUIPMENT DRAWINGS AS WELL AS ALL TECHNICAL SPECIFICATIONS PRIOR TO STARTING CONSTRUCTION AND SHOULD DISCREPANCIES OCCUR, THE CONTRACTOR SHALL NOTIFY THE ENGINEER TO OBTAIN THE ENGINEERS CLARIFICATION BEFORE COMMENCING WITH CONSTRUCTION.
2. THE CONTRACTOR SHALL COORDINATE ALL RELATED DISCIPLINE DRAWINGS TO ENSURE ACCURATE INSTALLATION OCCURS,INCLUDING P&ID'S.
3. CONTRACTOR SHALL MAINTAIN A CLEAR PATH FOR ALL SURFACE WATER DRAINAGE STRUCTURES AND DITCHES DURING CONSTRUCTION.
4. ALL PIPE LINES SHALL HAVE A MINIMUM COVER OF 36" UNLESS OTHERWISE NOTED OR DIRECTED.
5. NOTE; ALL VAULTS, MANHOLES, INLET STRUCTURES, BASINS, WET WELLS ETC. SHALL BE CONSIDERED "CONFINED SPACE ENTRY" AND SHALL BE MARKED AS SUCH BY MEANS OF STAMPING MANHOLE COVERS AND PLACING PERMANENT SIGNAGE ON THE VAULTS, BASINS OR STRUCTURES WARNING OF THE "CONFINED SPACE ENTRY" CONDITION.
6. CONTRACTOR SHALL BE RESPONSIBLE FOR ALL PIPE SUPPORTS WHETHER SHOWN ON THE CONTRACT DOCUMENTS OR NOT. PIPE SUPPORTS SHALL BE INSTALLED PER MANUFACTURER'S RECOMMENDATIONS FOR SPACING AND SUPPORT. ADDITIONALLY, PROVIDE SUPPORT WHERE ABOVE GRADE PIPING CHANGES DIRECTION, IS ADJACENT TO FLANGED VALVES OR OTHER APPURTENANCES OR AT EQUIPMENT CONNECTIONS AND HEAVY FITTINGS.
7. NOTE: ALL NON-POTABLE/PLANT WATER USERS MUST BE CLEARLY LABELED AS "NON-POTABLE", NOT FOR HUMAN CONSUMPTION
8. PLANT TRAFFIC FLOW SHALL BE MAINTAINED AT ALL TIMES DURING CONSTRUCTION. IF TRAFFIC FLOW IS TO BE RE-DIRECTED, CONTRACTOR SHALL COORDINATE TEMPORARY TRAFFIC FLOW PATTERNS WITH OWNER AND ENGINEER.
9. CONTRACTOR SHALL RESTRAIN ALL UNDERGROUND PRESSURE PIPING AT ALL FITTINGS AND PIPE JOINTS.

EXISTING UTILITIES:

1. UNDERGROUND UTILITIES SHOWN ON THE PLANS HAVE BEEN MADE AVAILABLE FROM VARIOUS ENTITIES THAT MAY INCLUDE UTILITY OWNERS, SURVEY SUBSURFACE UTILITY INVESTIGATIONS (SUE), RECORD DRAWINGS AND OTHERS. THIS INFORMATION MAY NOT ALL-INCLUSIVE AND THE CONTRACTOR IS ADVISED THAT ADDITIONAL UNDERGROUND UTILITIES AND CABLES INVESTIGATION MAY BE NECESSARY PRIOR TO STARTING CONSTRUCTION. THE CONTRACTOR SHALL NOTIFY THE ENGINEER OF RECORD IMMEDIATELY OF ALL POTENTIAL CONFLICTS.
2. THE CONTRACTOR SHALL FIELD VERIFY SIZE, DEPTH, LOCATION AND MATERIAL OF ALL UNDERGROUND UTILITIES PRIOR TO THE START OF CONSTRUCTION.
3. THE CONTRACTOR SHALL CAREFULLY SUPPORT AND PROTECT ANY UTILITIES, STRUCTURES, POWER POLES, PIPE LINES AND CONDUITS WHICH MAY BE ENCOUNTERED DURING COMPLETION OF THE WORK AT NO ADDITIONAL COST TO THE OWNER. THE CONTRACTOR SHALL APPLY NECESSARY MEANS TO PROTECT EXISTING UTILITIES DURING CONSTRUCTION . ANY DAMAGE RESULTING FROM THE CONTRACTOR'S OPERATIONS SHALL BE REPAIRED BY THE CONTRACTOR OR UTILITY OWNER (WHERE REQUIRED) TO THE SATISFACTION OF THE ENGINEER AND UTILITY OWNER AT THE CONTRACTOR'S EXPENSE.

11 PIPING SCHEDULE

ABBREVIATION	DESIGNATION	PIPE MATERIAL	NOTES
INF	INFLUENT	RESTRAINED DUCTILE IRON	RESTRAIN ENTIRE NETWORK
EFF	EFFLUENT	RESTRAINED DUCTILE IRON	RESTRAIN ENTIRE NETWORK, PROVIDE PIPE WITH PROTECTIVE LINING - ENTIRE NETWORK
D or SS	DRAIN OR SANITARY SEWER	DUCTILE IRON / SCH. 80 PVC	>=4" DIP / <=3" SCH. 80 PVC SOLVENT WELD, RESTRAIN ALL FITTINGS
FM	FORCE MAIN	RESTRAINED DUCTILE IRON	RESTRAIN ENTIRE NETWORK
NPW	NON-POTABLE WATER	RESTRAINED DUCTILE IRON / SCH. 80 PVC	>=4" DIP / <=3" SCH. 80 PVC SOLVENT WELD, RESTRAIN ENTIRE NETWORK
A	PROCESS AIR	SCH. 10 304 STAINLESS STEEL	
SL	SLUDGE	RESTRAINED DUCTILE IRON	RESTRAIN ENTIRE NETWORK
SC	SCUM	RESTRAINED DUCTILE IRON	RESTRAIN ENTIRE NETWORK
PW	POTABLE WATER	RESTRAINED DUCTILE IRON / SCH. 80 PVC	>=4" DIP / <=3" SCH. 80 PVC SOLVENT WELD, RESTRAIN ENTIRE NETWORK
FA	FOUL AIR	SCH. 80 PVC / FRP	FRP ABOVE GRADE SCH. 80 PVC BELOW GRADE
ATAD	ATAD SUPPLY & DISCHARGE	RESTRAINED DUCTILE IRON	RESTRAIN ENTIRE NETWORK
PE	PLANT EFFLUENT	RESTRAINED DUCTILE IRON	RESTRAIN ENTIRE NETWORK, PROVIDE PIPE CONNECTING NEW EQ TANK w/ EXISTING EQ BASIN AND (NEW AND EXISTING) BIODENOPHO DITCHES WITH PROTECTIVE LINING
RAS/WAS	WASTE/RETURN ACTIVATED SLUDGE	RESTRAINED DUCTILE IRON	RESTRAIN ENTIRE NETWORK

12 CROSS-REF SYMBOLOGY

X.XXX.X = SECTION CUT SYMBOL

X.XXX.X = STRUCTURE / BUILDING ELEVATION

X.XXX.X = DETAIL

REV.NO.	DESCRIPTION	DATE
0	ISSUED FOR BID	MAR 2021

REVISIONS

MITCHEL A. CHIAVAROLI SEAL No.56335 STATE OF FLORIDA PROFESSIONAL ENGINEER 3/17/21

MITCHEL A. CHIAVAROLI, P.E. No. 56335

McKIM&CREED
1365 Hamlet Avenue
Clearwater, Florida 33756
Phone: (727) 442-7196, Fax: (727) 461-3827
CA Lic. No. 29588
www.mckimcreed.com

Manatee County FLORIDA

LIFT STATION 12A ELECTRICAL PUMP & VFD REHABILITATION

GENERAL

CIVIL-MECHANICAL- LEAD SHEET

PROJ. START DATE:	2020. JUN
MCE PROJ. #	01024-0181
DRAWN	JG
DESIGNED	AAH
CHECKED	MAC
PROJ. MGR.	AAH

SCALE
HORIZONTAL: N/A
VERTICAL: TBD

G0.02
DRAWING NUMBER
0
REVISION

STATUS:
ISSUED FOR BID

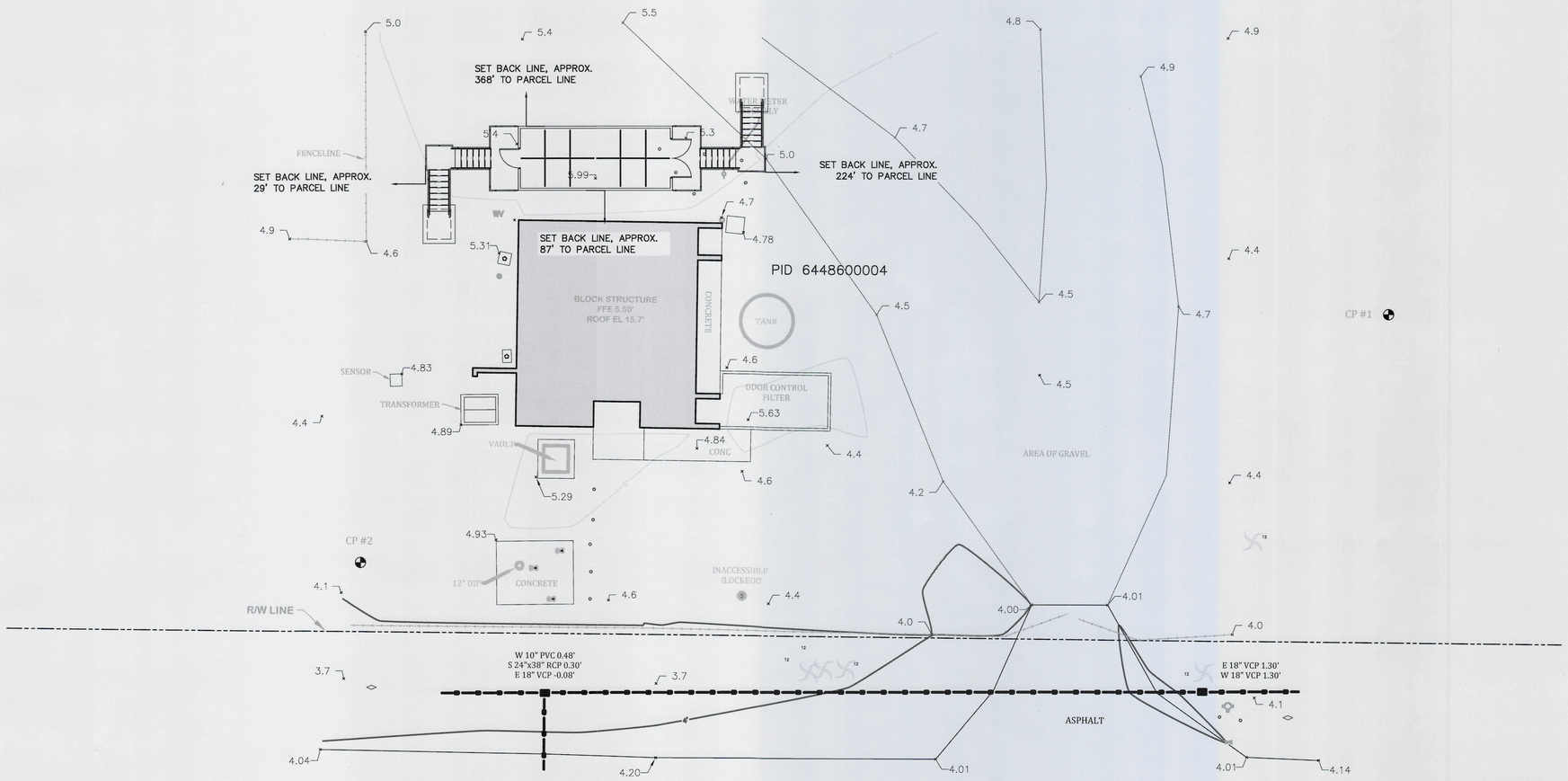

SITE PLAN

SCALE: 1"=10'-0"

SITE CONTROL

DESIGNATION	NORTHING	EASTING	ELEVATION	DESCRIPTION
CP #1	1121780.62	467360.95	5.20'	ND (LB 7203)
CP #2	1121742.13	467200.98	4.27'	IR (LB 7203)

LEGEND

PID	PARCEL IDENTIFICATION		CONTROL POINT
CP	CONTROL POINT		UTILITY POLE
R/W	RIGHT OF WAY		GUY WIRE
ND	NAIL W/ DISC		SEWER VALVE
IR	IRON ROD		WATER VALVE
SR	STATE ROAD		SANITARY MANHOLE
EL	ELEVATION		LIGHT POLE
FFE	FINISHED FLOOR ELEVATION		BOLLARD
UNKN	UNKNOWN		AIR RELEASE VALVE
	PINE		UTILITY RISER
	PALM		BLOW OFF
			UTILITY BOX
			OUTLET
			SPIGOT
			ANTENNA
			FIRE HYDRANT
			GRATE INLET
			MONITOR WELL

GENERAL NOTES

1. THE FOLLOWING MANATEE COUNTY VERTICAL CONTROL MONUMENT WAS RECOVERED AND UTILIZED FOR THE ELEVATIONS INDICATED HEREON: "26121 A" NAVD 1988 ELEVATION 7.65'
2. THIS SURVEY IS REFERENCED TO A GRID PROJECTION OF THE FLORIDA STATE PLANE COORDINATE SYSTEM (WEST ZONE NAD 1983/2011 ADJUSTMENT).
3. THIS IS NOT A BOUNDARY SURVEY. PARCEL AND R/W LINES INDICATED HEREON ARE APPROXIMATE.
4. THIS SURVEY IS SUBJECT TO PERTINENT EASEMENTS, RIGHTS-OF-WAY AND RESTRICTIONS OF RECORD, IF ANY.
5. THIS SURVEY DRAWING WAS PREPARED FOR THE EXCLUSIVE USE OF THE PARTY OR PARTIES CERTIFIED TO BELOW FOR THE EXPRESS PURPOSE STATED HEREON AND/OR CONTAINED IN THE CONTRACT BETWEEN HYATT SURVEY SERVICES, INC. AND THE CLIENT FOR THIS PROJECT. COPYING, DISTRIBUTING AND/OR USING THIS DRAWING, IN WHOLE OR IN PART FOR ANY PURPOSE OTHER THAN ORIGINALLY INTENDED WITHOUT WRITTEN CONSENT FROM HYATT SURVEY SERVICES, INC. IS STRICTLY PROHIBITED AND RENDERS THE SURVEYOR'S CERTIFICATION, SIGNATURE AND SEAL NULL AND VOID. ANY QUESTIONS CONCERNING THE CONTENT OR PURPOSE OF THIS DRAWING SHOULD BE DIRECTED TO HYATT SURVEY SERVICES, INC.

REV NO	DESCRIPTION	DATE
0	ISSUED FOR BID	MAR 2021

REVISIONS

AUBREY A. HAUDRICOURT, P.E. No. 66861

McKIM&CREED
1365 Hamlet Avenue
Clearwater, Florida 33756
Phone: (727) 442-7196, Fax: (727) 461-3827
CA Lic. No. 29588
www.mckimcreed.com

Manatee County FLORIDA

LIFT STATION 12A ELECTRICAL PUMP & VFD REHABILITATION

CIVIL SITE

SITE PLAN

PROJ. START DATE:	2020. JUN
MCE PROJ. #	01024-0181
DRAWN	JG
DESIGNED	AAH
CHECKED	MAC
PROJ. MGR.	AAH

SCALE
HORIZONTAL: 1"=10'-0"
VERTICAL: TBD

C0.00
DRAWING NUMBER
0
REVISION

STATUS: ISSUED FOR BID

NOTES:

1. DRAWING OBTAINED FROM SANITARY SEWERAGE PROJECT, PART A, SECTION III–SEWAGE LIFT STATIONS DATED DECEMBER 1971. ACTUAL CONDITIONS MAY NOT MATCH EXISTING DRAWING. CONTRACTOR SHALL FIELD VERIFY AND NOTIFY OWNER OF ANY DIFFERENCES THAT MAY IMPACT THE WORK TO BE PERFORMED.
2. CONTRACTOR SHALL REMOVE ANY EXPOSED ANCHOR BOLTS.
3. CONTRACTOR SHALL APPLY PATCHWORK TO CONCRETE AND TOUCH–UP PAINT WHERE REQUIRED.

▨ – EQUIPMENT TO BE DEMOLISHED

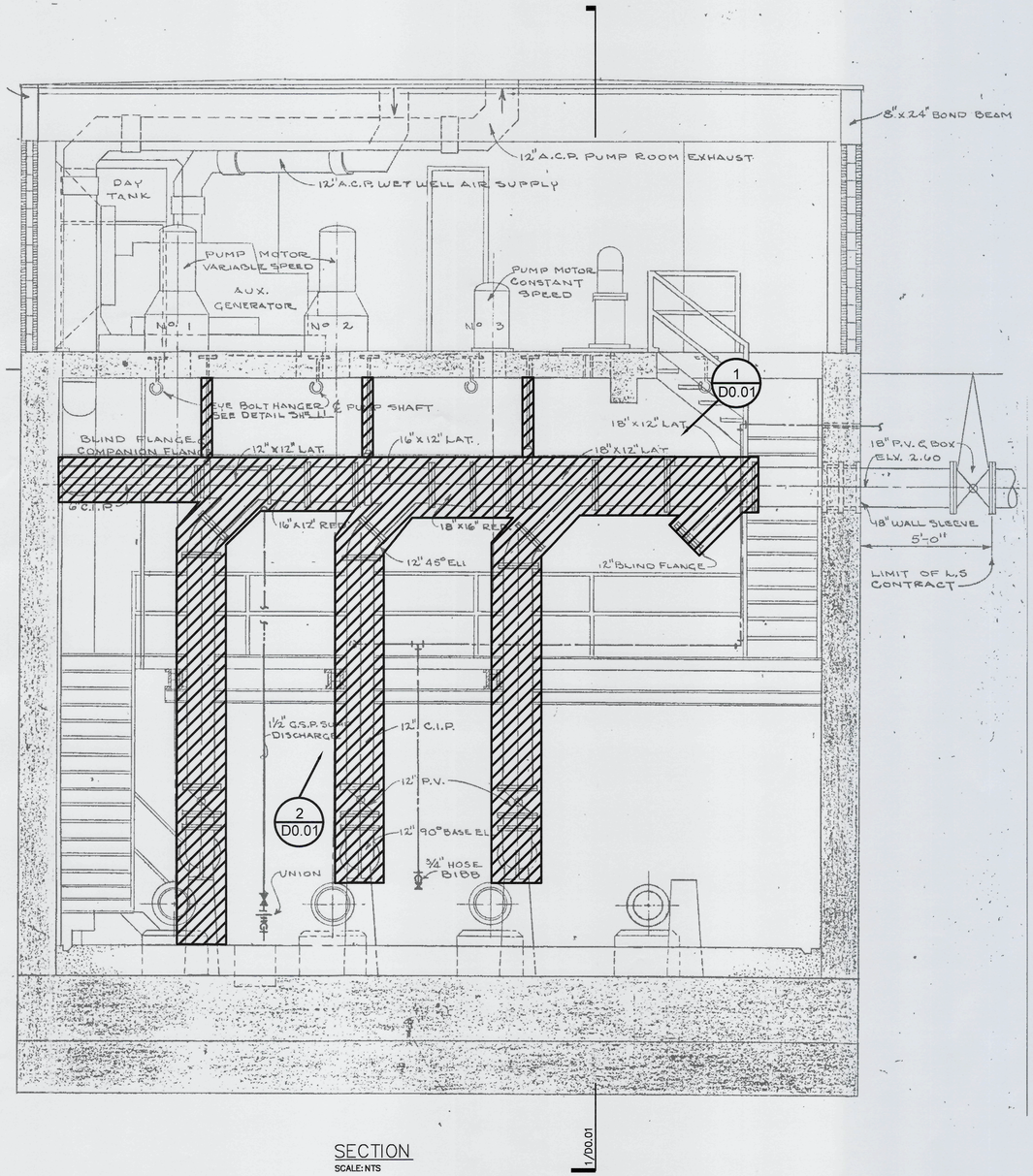

SECTION
SCALE: NTS

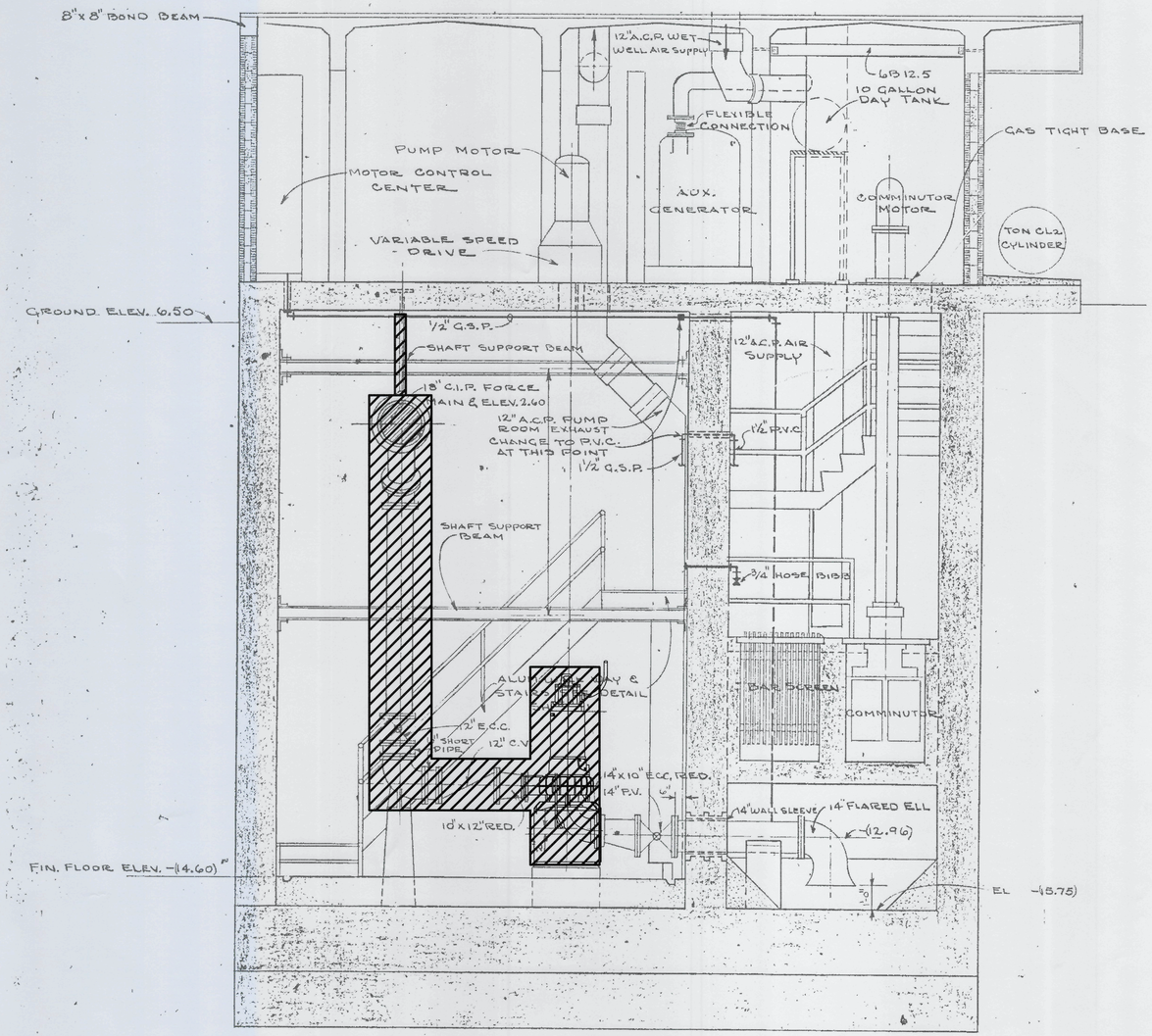

SECTION 1/D0.00
SCALE: NTS

REV.NO.	DESCRIPTION	DATE
0	ISSUED FOR BID	MAR 2021

REVISIONS

MITCHEL A. CHIAVAROLI SEAL — No. 56335 — STATE OF FLORIDA — PROFESSIONAL ENGINEER — 3/17/21
MITCHEL A. CHIAVAROLI, P.E. No. 56335

McKIM&CREED
1365 Hamlet Avenue
Clearwater, Florida 33756
Phone: (727) 442-7196, Fax: (727) 461-3827
CA Lic. No. 29588
www.mckimcreed.com

Manatee County FLORIDA

LIFT STATION 12A ELECTRICAL PUMP & VFD REHABILITATION

DEMOLITION

DEMOLITION OF EQUIPMENT I

PROJ. START DATE:	2020. JUN
MCE PROJ. #	01024-0181
DRAWN	DP
DESIGNED	DC
CHECKED	MC
PROJ. MGR.	AAH

SCALE
HORIZONTAL: N/A
VERTICAL: TBD

D0.00
DRAWING NUMBER
0
REVISION

STATUS:
ISSUED FOR BID

\\MCKIMCREED.COM\NASUNI\DATA\PROJ\01024\0181\WATER\80–DRAWINGS\MECHANICAL\DEMOLITION OF EXISTING EQUIPMENT.DWG 03/17/2021 11:41:09 SUVATH SENG

– EQUIPMENT TO BE DEMOLISHED

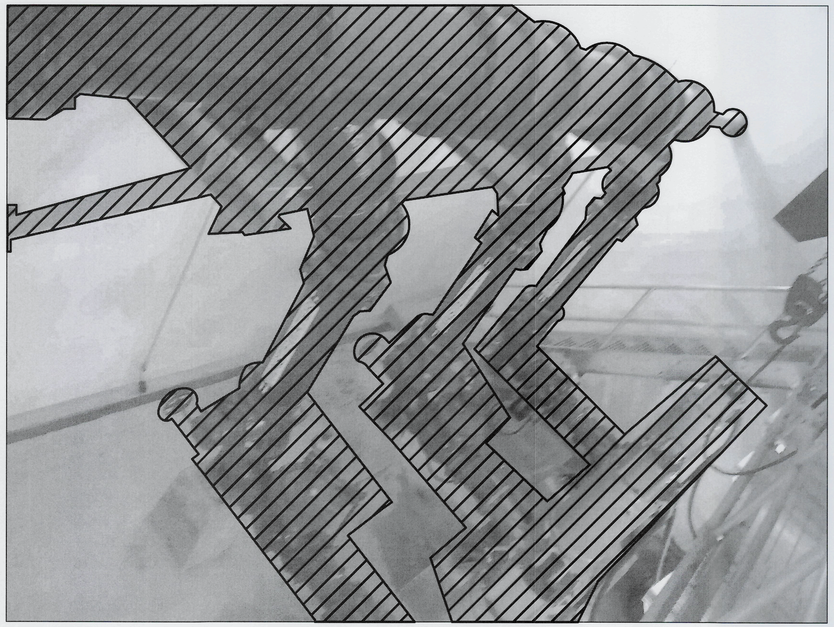

DEMOLITION PHOTO 1/D0.01
SCALE: NTS

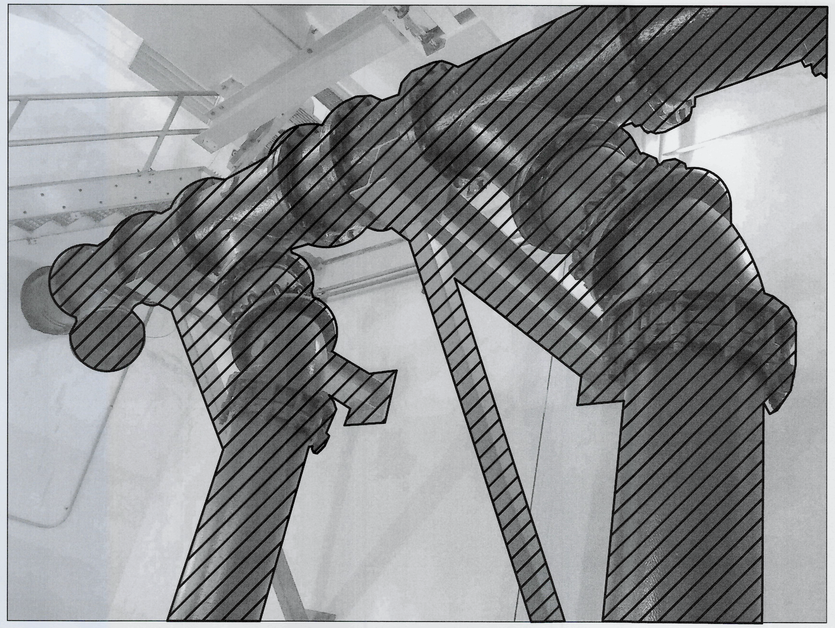

DEMOLITION PHOTO 2/D0.01
SCALE: NTS

REV.NO.	DESCRIPTION	DATE
0	ISSUED FOR BID	MAR 2021

REVISIONS

MITCHEL A. CHIAVAROLI SEAL
No. 56335
3/17/21
STATE OF FLORIDA
PROFESSIONAL ENGINEER
MITCHEL A. CHIAVAROLI, P.E.
No. 56335

McKIM&CREED
1365 Hamlet Avenue
Clearwater, Florida 33756
Phone: (727) 442-7196, Fax: (727) 461-3827
CA Lic. No. 29588
www.mckimcreed.com

Manatee County FLORIDA

LIFT STATION 12A ELECTRICAL PUMP & VFD REHABILITATION

DEMOLITION

DEMOLITION OF EQUIPMENT II

PROJ. START DATE:	2020. JUN
MCE PROJ. #	01024-0181
DRAWN	DP
DESIGNED	DC
CHECKED	MC
PROJ. MGR.	AAH

SCALE
HORIZONTAL: N/A
VERTICAL: TBD

D0.01
DRAWING NUMBER
0
REVISION

STATUS:
ISSUED FOR BID

0 2 4

SCALE: 3/8" = 1'-0"

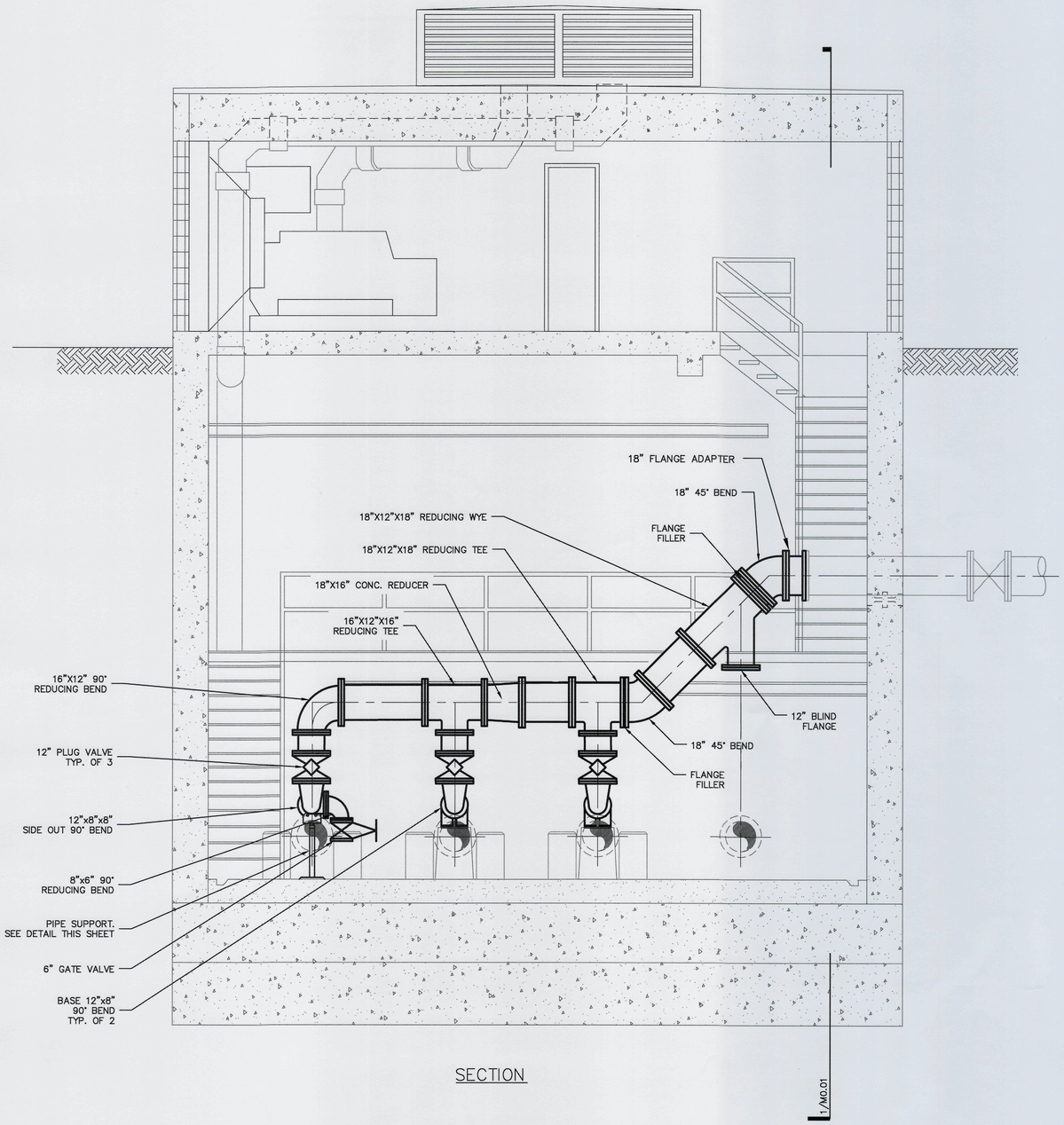

SECTION

NOTES:

1. THERE ARE EXISTING FLOOR HATCHES THAT MAY BE USED BY THE CONTRACTOR TO REMOVE EXISTING AND INSTALL NEW PUMPS. REFER TO FLOOR PLAN ON SHEET E1.02.

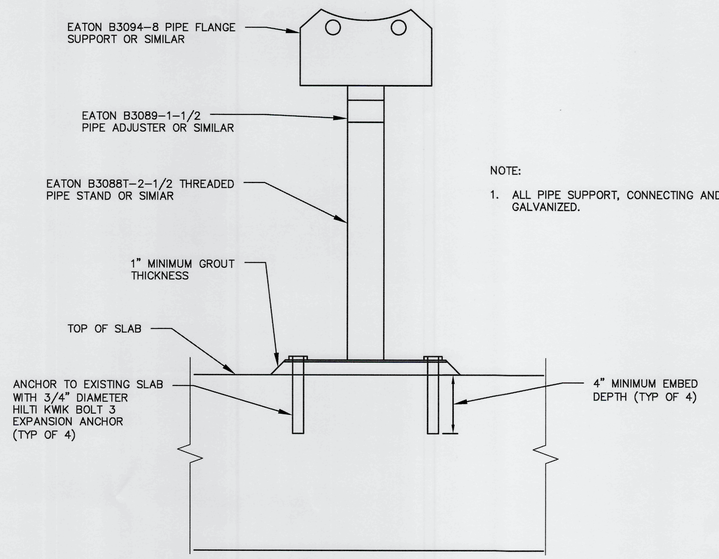

NOTE:

1. ALL PIPE SUPPORT, CONNECTING AND ANCHORING MATERIALS SHALL BE GALVANIZED.

PIPE SUPPORT DETAIL

NTS

REV.NO	DESCRIPTION	DATE
0	ISSUED FOR BID	MAR 2021

REVISIONS

SEAL

MITCHEL A. CHIAVAROLI
No. 56335
STATE OF FLORIDA
PROFESSIONAL ENGINEER

3/17/21

MITCHEL A. CHIAVAROLI, P.E.
No. 56335

McKIM&CREED
1365 Hamlet Avenue
Clearwater, Florida 33756
Phone: (727) 442-7196, Fax: (727) 461-3827

CA Lic. No. 29588
www.mckimcreed.com

Manatee County FLORIDA

LIFT STATION 12A ELECTRICAL PUMP & VFD REHABILITATION

MECHANICAL

PROPOSED PUMPS AND PIPING I

PROJ. START DATE:	2020. JUN
MCE PROJ. #	01024-0181
DRAWN	DP
DESIGNED	DC
CHECKED	MAC
PROJ. MGR.	AAH

SCALE
HORIZONTAL: AS SHOWN
VERTICAL: N/A

M0.00
DRAWING NUMBER
0
REVISION

STATUS:
ISSUED FOR BID

0 2 4
SCALE: 3/8" = 1'-0"

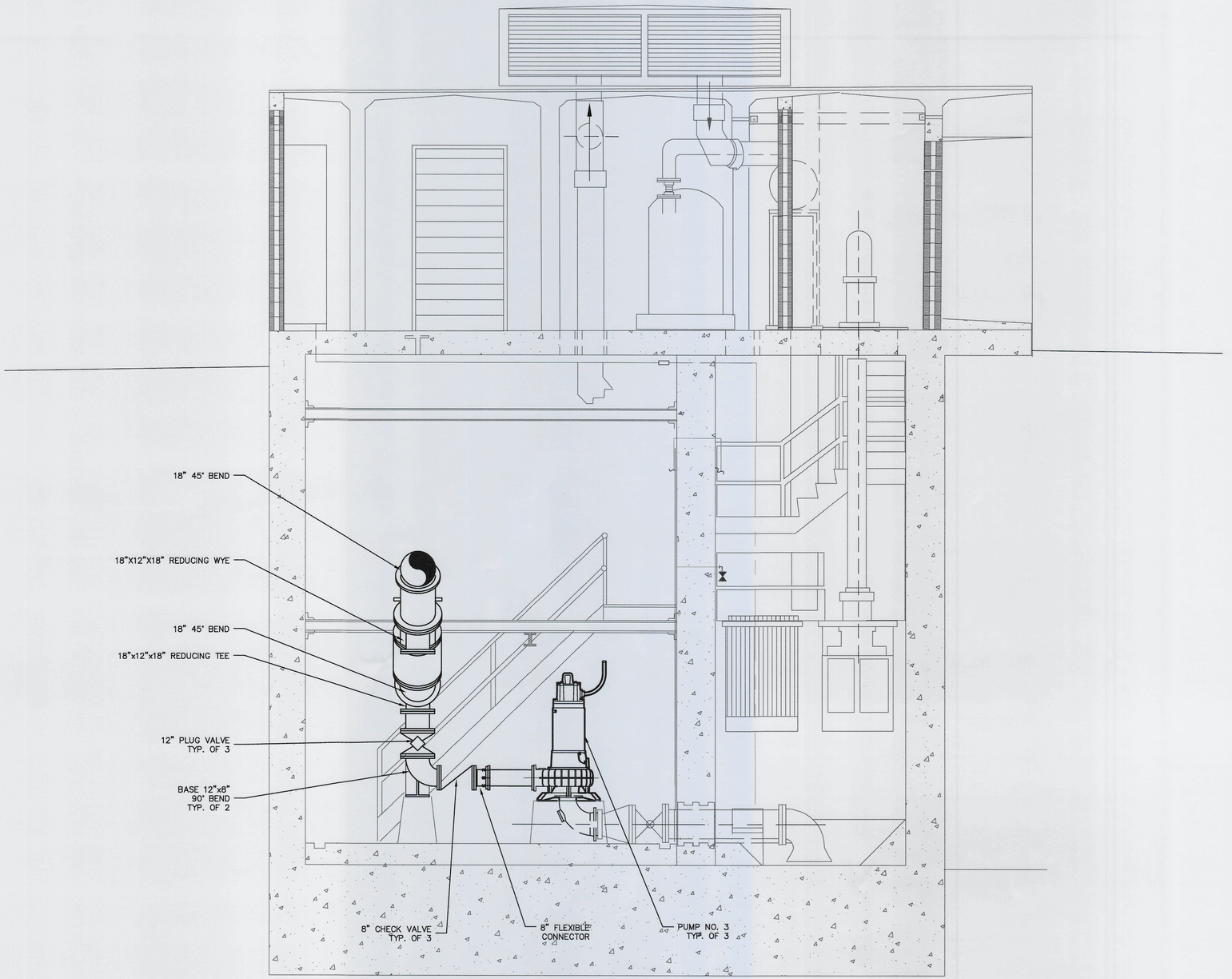

SECTION 1/M0.00

REV.NO.	DESCRIPTION	DATE
0	ISSUED FOR BID	MAR 2021

REVISIONS

MITCHEL A. CHIAVAROLI REAL
No 56335
STATE OF FLORIDA
PROFESSIONAL ENGINEER
3/17/21
MITCHEL A. CHIAVAROLI, P.E.
No. 56335

McKIM&CREED
1365 Hamlet Avenue
Clearwater, Florida 33756
Phone: (727) 442-7196, Fax: (727) 461-3827

CA Lic. No. 29588
www.mckimcreed.com

Manatee County FLORIDA

LIFT STATION 12A ELECTRICAL PUMP & VFD REHABILITATION

MECHANICAL

PROPOSED PUMPS AND PIPING II

PROJ. START DATE:	2020. JUN
MCE PROJ. #	01024-0181
DRAWN	DP
DESIGNED	DC
CHECKED	MAC
PROJ. MGR.	AAH

SCALE
HORIZONTAL: 3/8"=1'-0"
VERTICAL: N/A

M0.01
DRAWING NUMBER
0
REVISION

STATUS:
ISSUED FOR BID

\\MCKIMCREED.COM\NASUNI\DATA\PROJ\01024\0181\WATER\80-DRAWINGS\MECHANICAL\MECHANICAL DETAILS.DWG 03/17/2021 11:41:32 SUVATH SENG

1 GENERAL NOTES

1.1 ALL WORK IS TO BE PERFORMED IN A GOOD, WORKMANLIKE AND PROFESSIONAL MANNER.

1.2 ALL CONSTRUCTION SHALL BE IN STRICT COMPLIANCE WITH THE REQUIREMENTS OF THE FLORIDA STATE BUILDING CODE (FBC), LATEST EDITION, OR LOCAL BUILDING CODE REQUIREMENTS IF MORE STRINGENT.

1.3 THESE DRAWINGS DO NOT SHOW PROVISIONS FOR SAFETY DURING CONSTRUCTION. IT IS THE RESPONSIBILITY OF THE GENERAL CONTRACTOR TO PROVIDE THE REQUIRED BRACING, SHORING, AND SAFETY DEVICES THROUGHOUT THE CONSTRUCTION OF THIS PROJECT.

2 COORDINATION

2.1 STRUCTURAL DRAWINGS SHALL BE USED IN CONJUNCTION WITH & COORDINATED WITH CIVIL AND ELECTRICAL DRAWINGS, INCLUDING VENDOR SUBMITTAL DRAWINGS AND OTHER CONTRACT DOCUMENTS.

2.2 COORDINATE THE EXACT SIZE AND LOCATION OF ALL SLEEVES AND OPENINGS THROUGH WALLS OR CONCRETE SLABS WITH CIVIL AND ELECTRICAL DRAWINGS, INCLUDING VENDOR SUBMITTAL DRAWINGS AND OTHER CONTRACT DOCUMENTS.

2.3 ANY DISCREPANCIES BETWEEN ACTUAL CONDITIONS AND THOSE SHOWN ON THESE DRAWINGS ARE TO BE BROUGHT TO THE ATTENTION OF THE STRUCTURAL ENGINEER BEFORE WORK PROCEEDS, INCLUDING ORDERING AND FABRICATING MATERIALS.

2.4 INDEPENDENT TESTING/REVIEW OF MATERIALS SHALL BE PROVIDED AS DEFINED IN PROJECT SPECIFICATIONS IF APPLICABLE. IN GENERAL PROJECT INVOLVES THE FOLLOWING:
- A. SOIL/FILL COMPACTION & BEARING.
- B. C.I.P. CONCRETE.

2.5 IF COORDINATION OF INFORMATION PRESENTED CONFLICTS W/ THE PROJECT SPECIFICATIONS, THE DRAWINGS WILL TAKE PRECEDENCE.

2.6 IN GENERAL CALL-OUTS ARE FOR NEW CONSTRUCTION U.N.O.. EXISTING CONSTRUCTION CALL-OUTS, ELEVATIONS AND DIMENSIONS OF EXISTING STRUCTURES ARE BASED ON EXISTING RECORD DRAWINGS PROVIDED TO McKIM & CREED. THE (*) SYMBOL ON INDIVIDUAL FACILITY "STRUCTURAL" DRAWINGS INDICATES EXISTING CONSTRUCTION CALL-OUTS, CONDITIONS, ELEVATIONS AND DIMENSIONS TO BE FIELD VERIFIED BY THE GENERAL CONTRACTOR U.N.O. PRIOR TO CONSTRUCTION, INCLUDING ORDERING AND FABRICATING MATERIALS. RECORD DRAWINGS PROVIDED BY MANATEE COUNTY UTILIZED INCLUDES:
- A. "MANATEE COUNTY, FLA. SANITARY SEWERAGE PART A SECTION III - SEWAGE LIFT STATIONS" BY RUSSELL & AXON, CONSULTING ENGINEERS, INC. (DTD. DECEMBER 1971).

2.7 SPECIAL INSPECTIONS (IF APPLICABLE): ALL FOUNDATION SOILS, REINF. STEEL, C.I.P. CONCRETE, CONCRETE MASONRY, STRUCTURAL STEEL & PRE-CAST CONCRETE BUILDINGS/STRUCTURES WORK SHALL BE REVIEWED AS STATED IN CONJUNCTION w/ THEIR RESPECTIVE NOTES BELOW.

3 FOUNDATIONS

3.1 DESIGN ALLOWABLE SOIL BEARING PRESSURE = 2,500 PSF IN ACCORDANCE w/ THE PROJECT GEOTECHNICAL REPORT AS PREPARED BY DRIGGERS ENGINEERING SERVICES, INC. (PROJECT NO. DES 208566, DTD. OCTOBER 06, 2020). THE CONTRACTOR IS RESPONSIBLE FOR VERIFYING THIS VALUE PRIOR TO FOUNDATION CONSTRUCTION. IN AREAS WHERE THE SOIL DOES NOT YIELD THIS BEARING STRESS VALUE, ADJUSTMENT IN THE FOOTING DEPTHS AND FOUNDATION DIMENSION MAY BE MADE BY THE ENGINEER BEFORE WORK PROCEEDS. CONTRACTOR IS RESPONSIBLE FOR PERFORMING ANY SUCH ADJUSTMENTS.

3.2 PREPARE THE EXISTING SUBGRADE IN ACCORDANCE w/ THE PROJECT GEOTECHNICAL REPORT AS PREPARED BY DRIGGERS ENGINEERING SERVICES, INC. (PROJECT NO. DES 208566, DTD. OCTOBER 06, 2020). IN THE EVENT UNUSUAL SOIL CONDITIONS ARE UNCOVERED, NOTIFY THE OWNER AND ENGINEER PRIOR TO FOUNDATION CONSTRUCTION FOR INSTRUCTIONS HOW TO PROCEED. ADJUSTMENT IN THE FOOTING DEPTHS AND GENERAL FOUNDATION CONSTRUCTION MAY BE MADE BY THE ENGINEER BEFORE WORK PROCEEDS. CONTRACTOR IS RESPONSIBLE FOR PERFORMING ANY SUCH ADJUSTMENTS.

3.3 FOOTING, PIER & SLAB EXCAVATIONS AND FORMS SHALL BE REVIEWED BY AN OWNER'S CONSTRUCTION REPRESENTATIVE PRIOR TO PLACEMENT OF CONCRETE.

3.4 FOOTING, PIER & SLAB ELEVATIONS SHALL NOT BE RAISED OR LOWERED WITHOUT APPROVAL OF THE STRUCTURAL ENGINEER.

3.5 ALL EXCAVATIONS SHALL BE ADEQUATELY DEWATERED BEFORE PLACEMENT OF CONCRETE. NO CONCRETE OR CONCRETE FILL SHALL BE PLACED IN STANDING WATER. ACCUMULATION EXCEEDING 1 INCH SHALL BE PUMPED OUT.

3.6 ALL FILL MATERIAL, IF REQUIRED, INSIDE THE BUILDING's/STRUCTURE's FOOTPRINT AND BELOW FOUNDATION's SHALL BE SELECT MATERIAL FREE FROM ROOTS, TRASH WOOD SCRAPS, AND OTHER EXTRANEOUS MATERIALS. PLACE FILL IN LIFTS NOT EXCEEDING THE RECOMMENDATIONS OF THE PROJECT GEOTECHNICAL REPORT AS PREPARED BY DRIGGERS ENGINEERING SERVICES, INC. (PROJECT NO. DES 208566, DTD. OCTOBER 06, 2020).

3.7 ALL FOOTINGS & PIERS SHALL BE CENTERED UNDER THE SUPPORTED WALL/COLUMN MEMBER UNLESS NOTED OTHERWISE.

3.8 CONSTRUCTION JOINTS IN FOUNDATION SLABS, WALLS & FOOTINGS SHALL BE MADE AT LOCATIONS SHOWN ON DRAWINGS.

3.9 ANCHOR BOLTS SHALL BE SET BY MEANS OF TEMPLATE. "FLOATING" ANCHOR BOLTS INTO PLACE IS PROHIBITED.

3 FOUNDATIONS CTD.

3.10 CONTRACTOR IS TO VERIFY THE ELEVATION AND LOCATION OF ALL EXISTING AND PROPOSED UTILITIES PRIOR TO CONSTRUCTION. ANY "KNOWN" UTILITY LINES DAMAGED WILL BE REPLACED AT THE CONTRACTOR'S EXPENSE. IF ANY "UNKNOWN" UTILITY LINES ARE ENCOUNTERED WHEN EXCAVATING THE CONTRACTOR IS TO CEASE ALL EXCAVATION ACTIVITY UNTIL THE ENGINEER AND OWNER ARE NOTIFIED AND INSTRUCTIONS ARE PROVIDED ABOUT HOW TO PROCEED.

3.11 THE CONTRACTOR SHALL OBTAIN THE OWNER'S PERMISSION BEFORE ENCASING OR BACK FILLING AROUND ANY EXISTING UNDERGROUND STRUCTURE, PIPING, ELECTRICAL, OR OTHER UNDERGROUND WORK.

4 REINFORCING STEEL

4.1 BARS SHALL BE ROLLED FROM NEW BILLET-STEEL OF DOMESTIC MANUFACTURE CONFORMING TO "STANDARD SPECIFICATION FOR DEFORMED AND PLAIN BILLET STEEL BARS FOR CONCRETE REINFORCEMENT," ASTM A615, GRADE 60 AND SUPPLEMENTARY REQUIREMENT S-1.

4.2 DETAIL AND FABRICATE REINFORCING STEEL IN ACCORDANCE WITH THE AMERICAN CONCRETE INSTITUTE "ACI DETAILING MANUAL," LATEST PUBLICATION.

4.3 REINFORCING STEEL IN PLACE SHALL BE REVIEWED BY THE OWNER'S CONSTRUCTION REPRESENTATIVE PRIOR TO PLACEMENT OF CONCRETE.

4.4 WELDED WIRE FABRIC SHALL CONFORM TO "STANDARD SPECIFICATION FOR WELDED STEEL WIRE FABRIC FOR CONCRETE REINFORCEMENT," ASTM A1064.

4.5 PLACE WELDED WIRE FABRIC AT CENTER OF SLABS-ON-GRADE AND ELEVATED SLAB TOPPINGS OVER METAL DECK, UNLESS NOTED OTHERWISE.

4.6 PROVIDE BARS AT CORNERS AND INTERSECTIONS OF WALLS & FOOTINGS OF THE SAME NUMBER AND SIZE AS LONGITUDINAL BARS, U.N.O. ON THE DRAWINGS.

4.7 FABRICATE CONTINUOUS BARS IN SLABS, WALLS AND FOOTINGS TO THE LONGEST PRACTICABLE LENGTHS.

4.8 REINFORCING STEEL SHALL NOT BE BENT AFTER BEING PARTIALLY EMBEDDED IN HARDENED CONCRETE.

4.9 BARS SHALL BE COLD BENT AND SHALL NOT BE HEATED FOR ANY REASON.

4.10 REINFORCING BARS SHALL NOT BE WELDED.

4.11 REFERENCE DRAWINGS FOR REQUIREMENTS FOR LAP SPLICING REINFORCING STEEL IN CONCRETE. ALL "LCS" SHALL CONFORM TO CLASS B SPLICE CRITERIA. IT IS ACCEPTABLE TO TO LAP SPLICE NON "LCS" A MINIMUM OF 50 BAR DIAMETERS UNLESS NOTED OTHERWISE.

4.12 LAP SPLICED BARS IN CONCRETE ARE TO BE WIRE TIED.

4.13 LAP SPLICED BARS IN MASONRY ARE TO BE NO FARTHER APART THAN 8".

5 CONCRETE

5.1 IN GENERAL CONCRETE SHALL DEVELOP 4,000 PSI MINIMUM COMPRESSIVE STRENGTH AT 28 DAYS. IN ADDITION REFERENCE "DESIGN CRITERIA" THIS DWG. & PROJECT SPECIFICATIONS FOR APPLICATION & SPECIFIC CONCRETE MIX DESIGN REQUIREMENTS.

5.2 CONCRETE WORK SHALL CONFORM TO "BUILDING CODE REQUIREMENTS FOR REINFORCED CONCRETE", ACI 318 & TO "CODE REQUIREMENTS FOR ENVIRONMENTAL ENGINEERING CONCRETE STRUCTURES", ACI 350 (LATEST EDITIONS).

5.3 PLACE 1/2 INCH EXPANSION JOINT MATERIAL BETWEEN EDGES OF CONCRETE AND VERTICAL SURFACES UNLESS NOTED OTHERWISE.

5.4 PROVIDE CONSTRUCTION OR CONTROL JOINTS IN SLABS & WALLS AT LOCATIONS SHOWN ON DRAWINGS.

5.5 CHAMFER EXPOSED EDGES OF CONCRETE 3/4 INCH, UNLESS NOTED OTHERWISE.

5.6 CONTRACTOR SHALL BE RESPONSIBLE FOR PROPER CURING OF ALL CONCRETE. CURING METHODS SHALL CONFORM TO "BUILDING CODE REQUIREMENTS FOR REINFORCED CONCRETE" ACI 318, "CODE REQUIREMENTS FOR ENVIRONMENTAL ENGINEERING CONCRETE STRUCTURES" ACI 350 AND "STANDARD PRACTICE FOR CURING CONCRETE," ACI 308 (LATEST EDITIONS).

5.7 UNLESS NOTED OTHERWISE DOWELS SHALL BE THE SAME NUMBER AND SIZE AS THE LARGEST VERTICAL BAR TO WHICH THEY ARE SPLICED.

5.8 REFERENCE PROJECT SPECIFICATIONS FOR REQUIRED FINISHES.

5.9 CONTRACTOR SHALL SUBMIT REBAR SHOP DRAWINGS FOR APPROVAL TO OWNER PRIOR TO FABRICATION. DO NOT FABRICATE REINFORCING PRIOR TO RECEIPT OF APPROVED SHOP DRAWINGS.

5.10 CONCRETE MIXES TO BE REVIEWED BY THE OWNER'S CONSTRUCTION REPRESENTATIVE PRIOR TO PLACEMENT OF CONCRETE. COMPRESSIVE STRENGTH TEST CYLINDERS TO BE REVIEWED BY THE OWNER'S CONSTRUCTION REPRESENTATIVE THROUGHOUT CONCRETE CONSTRUCTION OF THE PROJECT.

6 GROUT

6.1 GROUT WHERE REQUIRED SHALL BE NON-SHRINK GROUT IN CONFORMANCE TO ASTM C1107.

6.2 GROUT SHALL BE NON-METALLIC AND NON-STAINING AND HAVE A MINIMUM COMPRESSIVE STRENGTH OF 5,000 PSI.

7 MASONRY

NOT APPLICABLE.

8 STRUCTURAL STEEL

8.1 STEEL SHALL CONFORM TO "STANDARD SPECIFICATION FOR STRUCTURAL STEEL," ASTM A36 (Fy=36 ksi) FOR ANGLES, PLATES & CHANNELS. WIDE FLANGE SECTIONS SHALL CONFORM TO ASTM A992 (Fy=50 ksi). HOLLOW STEEL SECTIONS (HSS) SHALL CONFORM TO ASTM A500, GRADE B (Fy=46 ksi). STEEL PIPE SHALL CONFORM TO ASTM A53, GRADE B, (Fy=35 ksi).

8.2 STEEL WORK SHALL CONFORM TO "SPECIFICATION FOR THE DESIGN, FABRICATION AND ERECTION OF STRUCTURAL STEEL BUILDINGS", OF THE AMERICAN INSTITUTE OF STEEL CONSTRUCTION, INC., (LATEST EDITION), INCLUDING ALL SUPPLEMENTS AND THE "CODE OF STANDARD PRACTICE FOR STEEL BUILDINGS AND BRIDGES", (LATEST EDITION).

8.3 CONNECTION BOLTS SHALL BE 3/4 INCH DIAMETER CONFORMING TO "STANDARD SPECIFICATION FOR HIGH-STRENGTH BOLTS FOR STRUCTURAL STEEL JOINTS", ASTM A325, UNLESS NOTED OTHERWISE CONNECTIONS ARE BEARING TYPE WITH THREADS EXCLUDED FROM SHEAR PLANES (A325x).

8.4 WELDING SHALL BE IN ACCORDANCE WITH THE LATEST EDITION OF THE AMERICAN WELDING SOCIETY AWS D1.1 "STRUCTURAL WELDING CODE". WELDING SHALL BE PERFORMED BY CERTIFIED PERSONNEL WHO HAVE BEEN PREVIOUSLY QUALIFIED BY TEST PRESCRIBED IN THE AWS "STRUCTURAL WELDING CODE". ELECTRODES SHALL CONFORM TO AWS 5.5, E70XX.

8.5 LINTELS SHALL BEAR EIGHT (8) INCHES MINIMUM ON MASONRY UNLESS NOTED OTHERWISE.

8.6 THE CONTRACTOR SHALL PROVIDE ADEQUATE TEMPORARY BRACING, SHORING, AND GUYING OF STEEL FRAMING AGAINST WIND, CONSTRUCTION LOADS, AND OTHER TEMPORARY FORCES UNTIL SUCH PROTECTION IS NO LONGER REQUIRED FOR THE SAFE SUPPORT OF THE FRAMING.

8.7 ALL COPES, BLOCKS, CUTS, CUT-OFFS AND OTHER CUTTING OF STRUCTURAL MEMBERS SHALL HAVE ALL RE-ENTRANT CORNERS SHAPED, AND NOTCH-FREE TO A RADIUS OF AT LEAST 1/2 INCH. THE FILLET AND ITS CONTIGUOUS CUTS SHALL MEET WITHOUT OFFSET OR CUTTING PAST THE POINT OF TANGENCY.

8.8 ANCHOR BOLTS SHALL BE ASTM F1554 OR ASTM A36 & SHALL BE EITHER HEADED w/ NUTS TACK WELDED TO BOLTS OR NON-HEADED w/ HOOKS AS REQUIRED BY THE DRAWINGS. PROVIDE (2) NUTS AND WASHERS WITH EACH ANCHOR BOLT AT COLUMNS UNLESS NOTED OTHERWISE. ANCHOR BOLTS FOR EQUIPMENT & OTHER ASSEMBLIES MAY BE POST APPLIED ANCHOR ASSEMBLIES AS INDICATED ON THE DRAWINGS.

8.9 OVERSIZED AND SLOTTED HOLES SHALL NOT BE USED FOR BOLTED CONNECTIONS ON THIS PROJECT EXCEPT AT LOCATIONS NOTED ON DRAWINGS.

8.10 SPLICING OF STRUCTURAL STEEL MEMBERS IS PROHIBITED WITHOUT THE APPROVAL OF THE STRUCTURAL ENGINEER, AS TO LOCATION AND TYPE OF SPLICE. ANY MEMBER HAVING A SPLICE NOT SHOWN AND DETAILED ON THE SHOP DRAWINGS WILL BE REPLACED.

8.11 PRE-GROUTING BASE PLATES IS NOT PERMITTED.

8.12 ALL HOLES IN STRUCTURAL STEEL ARE TO BE PUNCHED OR DRILLED. FLAME CUTTING OF STEEL IS STRICTLY PROHIBITED.

8.13 ALL DESIGN, DETAILING, FABRICATION AND ERECTION SHALL BE IN ACCORDANCE WITH THE LATEST EDITION OF THE AMERICAN INSTITUTE OF STEEL CONSTRUCTION (AISC) MANUAL OF STEEL CONSTRUCTION.

8.14 IN GENERAL SHOP CONNECTIONS SHALL BE EITHER WELDED OR BOLTED AND FIELD CONNECTIONS SHALL BE BOLTED UNLESS NOTED OTHERWISE.

8.15 FABRICATOR/CONTRACTOR SHALL SUBMIT SHOP DRAWINGS FOR OWNER/ENGINEER APPROVAL PRIOR TO FABRICATION. ALL SHOP DRAWINGS MAY BE EXPEDITED IF THE FABRICATOR ADHERES CLOSELY TO THE DETAILS, NOTES, AND INSTRUCTIONS, SHOWN ON THE DRAWINGS.

8.16 ALL GALVANIZED MATERIALS THAT ARE FIELD CUT, FIELD WELDED OR DAMAGED IN SURFACE FINISH SHALL BE CLEANED AND RE-COATED w/ A 98% ZINC RICH OXIDE AND IN CONFORMANCE w/ THE PROJECT SPECIFICATIONS.

8.17 STRUCTURAL STEEL FRAMING & DECKING ERECTION TO BE REVIEWED BY THE THE OWNER'S CONSTRUCTION REPRESENTATIVE THROUGHOUT CONCRETE & STEEL CONSTRUCTION OF THE PROJECT.

9 ALUMINUM

NOT APPLICABLE.

10 PRECAST CONCRETE

10.1 PRE-CAST CONCRETE FIELD ASSEMBLED STRUCTURES TO BE DESIGNED BY THE PRE-CAST MANUFACTURER UTILIZING "DESIGN LOADS" PROVIDED THIS DRAWING AND/OR THE RESPECTIVE FACILITY STRUCTURAL DRAWINGS AND IN ACCORDANCE w/ THE PROJECT SPECIFICATIONS. COORDINATE w/ THE CIVIL, ELECTRICAL, MECHANICAL AND VENDOR EQUIPMENT DRAWINGS FOR ADDITIONAL MATERIALS REQUIRED FOR CALCULATION OF THE DEAD LOADS, LIVE LOADS AND EQUIPMENT LOADS, THAT MAY BE SUSPENDED FROM THE SIDES OF WALL PANELS AND UNDERSIDE OF THE TOP SLAB PANELS AS APPLICABLE.

10.2. PRE-CAST CONCRETE FIELD ASSEMBLED STRUCTURES MANUFACTURER IS REQUIRED TO SUBMIT DRAWINGS AND CALCULATION PACKAGES SEALED, SIGNED AND DATED BY AN ENGINEER CURRENTLY LICENSED BY THE STATE OF FLORIDA. FABRICATION OF THE PRE-CAST FIELD ASSEMBLED STRUCTURES COMPONENTS SHOULD NOT OCCUR UNTIL "FINAL" ACCEPTANCE OF THE MANUFACTURER's DRAWINGS AND CALCULATIONS SUBMITTALS.

10.3 REFERENCE MECHANICAL AND STRUCTURAL DRAWINGS FOR PRE-CAST CONCRETE FIELD ASSEMBLED STRUCTURES FOUNDATION SYSTEMS AND BEARING ELEVATIONS, DIMENSIONS, WALL AND TOP SLAB OPENINGS & TOP SLAB SLOPE REQUIREMENTS.

10.4 REFERENCE MECHANICAL DRAWINGS & PROJECT SPECIFICATIONS FOR ALL INTERIOR AND EXTERIOR WALL AND SLAB SECTIONS FINISH REQUIREMENTS.

10.5 PRE-CAST FIELD ASSEMBLED STRUCTURES WALL AND SLAB SECTIONS TO HAVE A MINIMUM 28 DAY COMPRESSIVE STRENGTH OF 5,000 PSI.

10.6 REFERENCE ALL PROJECT SPECIFICATIONS RELATED TO THE PRE-CAST CONCRETE FIELD ASSEMBLED STRUCTURES FOR ADDITIONAL REQUIREMENTS AND INFORMATION.

10.7 CONSTRUCTION ACTIVITIES RELATED TO THE PRE-CAST FIELD ASSEMBLED STRUCTURES TO BE REVIEWED BY THE THE OWNER'S CONSTRUCTION REPRESENTATIVE THROUGHOUT CONCRETE CONSTRUCTION OF THE PROJECT.

11 PRE-ENGR. TIMBER TRUSS

NOT APPLICABLE.

12 PRE-ENGR. METAL BLDGS.

NOT APPLICABLE.

13 MISC. BUILDING MATERIALS

13.1 ALL MISCELLANEOUS MATERIALS ARE TO BE DELIVERED TO SITE & STAGED ON SITE PRIOR TO INSTALLATION. STORE ON SITE AS REQUIRED BY THE MATERIAL MANUFACTURER TO AVOID DAMAGE PRIOR TO INSTALLATION.

13.2 CAULK & SEALANT MATERIAL SHALL BE MASTERSEAL "NP 1" ONE COMPONENT, MOISTURE CURING HIGH PERFORMANCE POLY-URETHANE SEALANT, OR AN APPROVED EQUAL.

14 ABBREVIATIONS

14.1 THE FOLLOWING LIST OF ABBREVIATIONS IS NOT INTENDED TO REPRESENT ALL THOSE USED ON THE DRAWINGS, BUT TO SUPPLEMENT THE MORE COMMON ABBREVIATIONS USED.

ADD'L	=	ADDITIONAL
AL	=	ALUMINUM
ALT.	=	ALTERNATE
BLDG.	=	BUILDING
BLK.	=	BLOCK
BM.	=	BEAM
B.O.	=	BOTTOM OF
BRG.	=	BEARING
C.I.P.	=	CAST-IN-PLACE
CLR.	=	CLEAR
CMU	=	CONC. MAS. UNIT
C.O.	=	CLEAN OUT
COL.	=	COLUMN
CONC.	=	CONCRETE
CONN.	=	CONNECTION
CONST.	=	CONSTRUCTION
CONT.	=	CONTINUOUS
COORD.	=	COORDINATE
CTR.	=	CENTER
CTR'D.	=	CENTERED
DBL.	=	DOUBLE
DIR.	=	DIRECTION
DWG.	=	DRAWING
DWG.'s.	=	DRAWINGS
EA.	=	EACH
EL.	=	ELEVATION
E.O.	=	EDGE OF
EQ.	=	EQUAL
EQUIP.	=	EQUIPMENT
EXIST.	=	EXISTING
EXP.	=	EXPANSION
FLG.	=	FLANGE
FDN.	=	FOUNDATION
F.S.	=	FAR SIDE
FT.	=	FEET
FTG.	=	FOOTING
GA.	=	GAGE
GALV.	=	GALVANIZED
GALV'D	=	GALVANIZED
HORZ.	=	HORIZONTAL
H.P.	=	HIGH POINT
HRS.	=	HOURS
I/F	=	INSIDE FACE
INFO.	=	INFORMATION
INTR.	=	INTERIOR
JST.	=	JOIST
JT.	=	JOINT
KB	=	KNEE BRACE
LCS	=	LIQUID CONTAINMENT STRUCTURES
LLH	=	LONG LEG HORIZONTAL
LLV	=	LONG LEG VERTICAL
L.P.	=	LOW POINT
LSL	=	LONG SLOTTED
MAS.	=	MASONRY
MAT'L.	=	MATERIAL
MFG.	=	MANUFACTURER
MIN.	=	MINIMUM
MTL.	=	METAL
N/A	=	NOT APPLICABLE
NA	=	NOT APPLICABLE
NOM.	=	NOMINAL
N.S.	=	NEAR SIDE
N.T.S.	=	NOT TO SCALE
O.C.	=	ON CENTER
O/F	=	OUTSIDE FACE
O/H	=	OVERHANG
O/O	=	OUT TO OUT
OPNG.	=	OPENING
OPP.	=	OPPOSITE
ORIENT.	=	ORIENTATION
PLCS.	=	PLACES
P.P.	=	PUMP PAD
RAD.	=	RADIUS
REF.	=	REFERENCE
REINF.	=	REINFORCING
REQ'D.	=	REQUIRED
RET.	=	RETAINING
ROT.	=	ROTATE
SIM.	=	SIMILAR
SPA.	=	SPACED
SPECS.	=	SPECIFICATIONS
S.S.	=	STAINLESS STEEL
SSL	=	SHORT SLOTTED
STD.	=	STANDARD
STL.	=	STEEL
T&B	=	TOP & BOTTOM
T/D	=	TURN DOWN
THK.	=	THICK
THK'D	=	THICKENED
T.O.	=	TOP OF
T.O.S	=	TOP OF STEEL
TYP.	=	TYPICAL
U.N.O.	=	UNLESS NOTED OTHERWISE
XB	=	CROSS OR "X"-BRACE
VERT.	=	VERTICAL
W.P.	=	WORK POINT

15 DESIGN LOADS

DESIGN LOADS BASIS OF DESIGN:
FLORIDA BUILDING CODE (FBC) - 2020 EDITION
MINIMUM DESIGN LOADS FOR BUILDINGS & OTHER STRUCTURES - ASCE 7-16

EQUIP. LOAD: N/A
LIVE LOAD: 125 PSF (ELECTRICAL BLDG. FLOOR), 100 PSF (ACCESS STAIRS & PLATFORMS)
ROOF LOAD: 65 PSF (ELECTRICAL BLDG. ROOF)
SNOW LOAD: N/A
WIND LOAD: 160 mi/hr, EXPOSURE C, OCCUPANCY/RISK CATEGORY III

CALCULATED WIND BASE SHEARS:
Vx = 13.9 k & Vy = 4.9 k

COMPONENTS & CLADDING WIND PRESSURES:
ZONE 1, ZONE 2 & ZONE 3 ROOF PRESSURES = BY ELECTRICAL BLDG. MFG.
ZONE 4 & ZONE 5 WALL PRESSURES = BY ELECTRICAL BLDG. MFG.

SEISMIC: N/A

SOIL BEARING: FIELD TEST PER PROJECT GEOTECH REPORT = 2,500 PSF
REF. "FOUNDATIONS" NOTE 3.1 DWG. S0.00

16 DESIGN CRITERIA

CONCRETE 28 DAY COMPRESSIVE STRENGTH:	
SLABS-ON-GRADE & NON LCS SLABS	f'c = 4,000 PSI
PIPE ENCASEMENTS:	f'c = 3,000 PSI (N/A)
SLABS & WALLS OF LCS:	f'c = 4,500 PSI (N/A)
BEAMS & COLUMNS OF LCS:	f'c = 4,500 PSI (N/A)
NON-LCS FOOTINGS & PIERS:	f'c = 4,000 PSI
BELOW GRADE & RETAINING WALLS:	f'c = 4,000 PSI (N/A)
SIDEWALK, DRIVEWAY, CURB & GUTTER:	f'c = 3,000 PSI (N/A)
REINFORCING STEEL:	ASTM A615, GRADE 60
WELDED WIRE FABRIC:	ASTM A1064
STRUCTURAL STEEL:	REF. STRUCTURAL NOTE 8.1
ALUMINUM:	REF. STRUCTURAL NOTE 9.2 (N/A)
BOLTS SHALL BE 3/4"ø ASTM A325 OR TYPE 316 S.S.:	REF. STRUCTURAL NOTE 8.3
ANCHOR BOLTS SHALL BE 3/4"ø ASTM F-1554 OR ASTM A36 (STEEL); TYPE 316 S.S. (ALUMINUM):	REF. STRUCTURAL NOTE 8.8
STEEL ELECTRODES SHALL CONFORM TO:	AWS 5.5 E70XX
ALUMINUM WELD FILLERS ALLOYS SHALL CONFORM TO:	AWS A5.10 (N/A)
SOIL BEARING CAPACITY:	REF. "DESIGN LOADS" TABLE

17 LEGEND

ENLARGED PLAN AREA, DETAIL =
CONC. MASONRY BLOCK =
BRICK VENEER =
CONC. WALL, SLAB, ETC. =
GROUT =
GRATING =
DETAIL OR SECTION NO./SHEET NO. REFERENCE = X-SYY.Y
PROJECT NORTH = NORTH
ELEVATION DATUM =
ELEVATION NO./SHEET NO. REFERENCE = X-SYY.Y
ELEVATIONS X'-X" (Y.YY') = X'-X" = DISTANCE TO/FROM FACILITY REFERENCE EL 0'-0"
Y.YY' = EQUIVALENT SITE EL VERTICAL DATUM
STEP IN FOOTING ELEVATION = $
STL. FRAMING COL./BM. MOMENT CONNECTION =

(EXISTING) (EXISTING) (EXISTING) (EXISTING) (EXISTING)

REV.NO.	DESCRIPTION	DATE
0	ISSUED FOR BID	FEB 2021

REVISIONS

WILLIAM F. BAND, P.E. No. 67838 STATE OF FLORIDA PROFESSIONAL ENGINEER 02-16-21

McKIM&CREED
1365 Hamlet Avenue
Clearwater, Florida 33756
Phone: (727) 442-7196, Fax: (727) 461-3827
CA Lic. No. 29588
www.mckimcreed.com

Manatee County FLORIDA

LIFT STATION 12A ELECTRICAL PUMP & VFD REHABILITATION

STRUCTURAL

STRUCTURAL GENERAL NOTES, DESIGN LOADS, CRITERIA & LEGEND

PROJ. START DATE:	2020. JUN
MCE PROJ. #	01024-0181
DRAWN	DAR / WFB
DESIGNED	WFB
CHECKED	WFB / AEA
PROJ. MGR.	AAH

SCALE
HORIZONTAL: NA
VERTICAL: NA

DRAWING NUMBER: S0.00
REVISION: 0

STATUS: ISSUED FOR BID

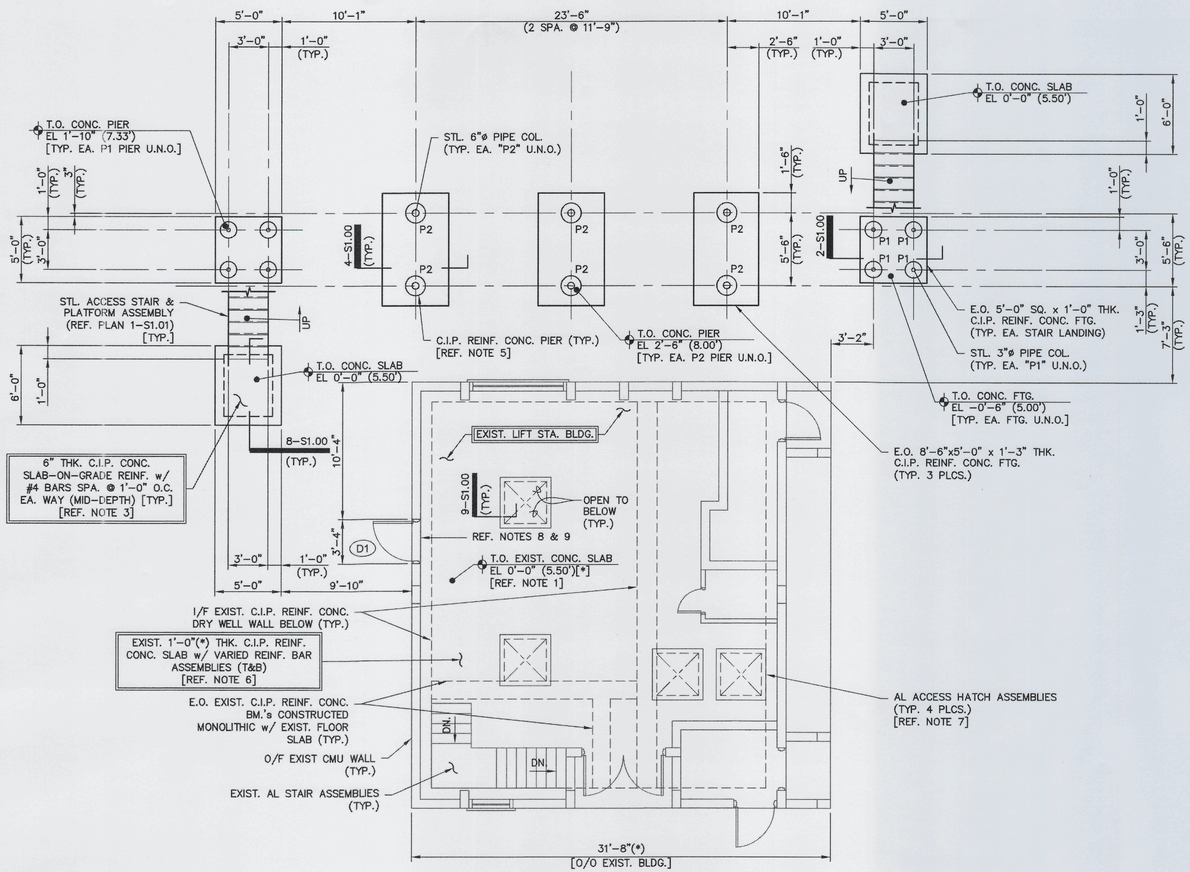

NORTH

1 - PLAN - EXIST. LIFT STATION MODS & ELECTRICAL BLDG. FOUNDATION LAYOUT

SCALE: 3/16" = 1'-0"

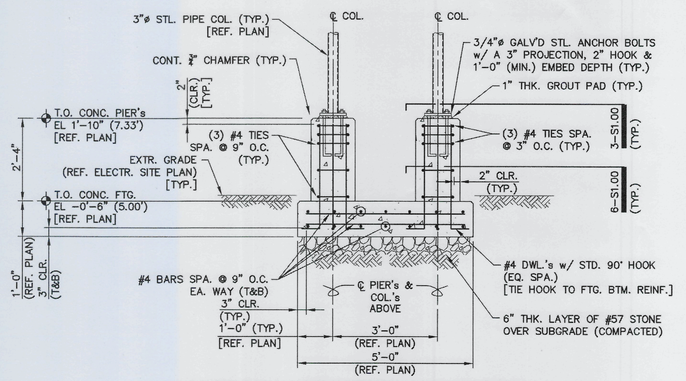

2 - SECTION - THRU STAIR LANDING FTG.

SCALE: 1/2" = 1'-0"

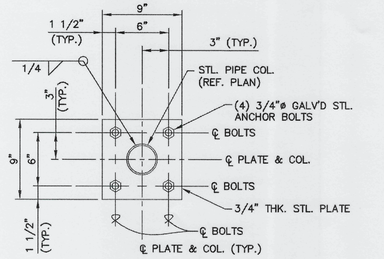

3 - SECTION - COL. BASE PLATE

SCALE: 1 1/2" = 1'-0"

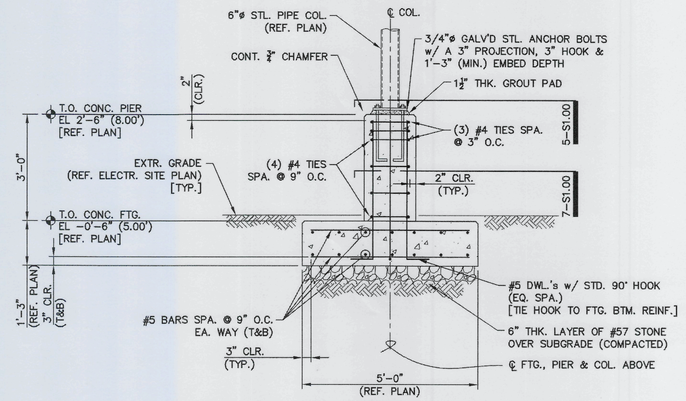

4 - SECTION - THRU ELECTR. BLDG. FTG.

SCALE: 1/2" = 1'-0"

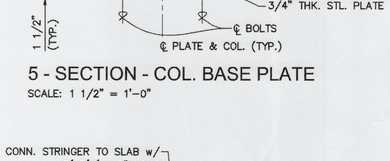

5 - SECTION - COL. BASE PLATE

SCALE: 1 1/2" = 1'-0"

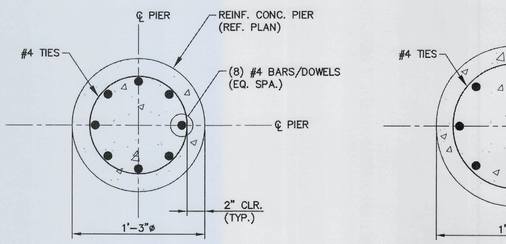

6 - SECTION - "P1" PIER REINF.

SCALE: 1 1/2" = 1'-0"

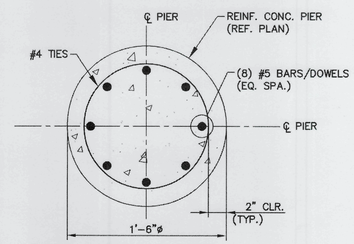

7 - SECTION - "P2" PIER REINF.

SCALE: 1 1/2" = 1'-0"

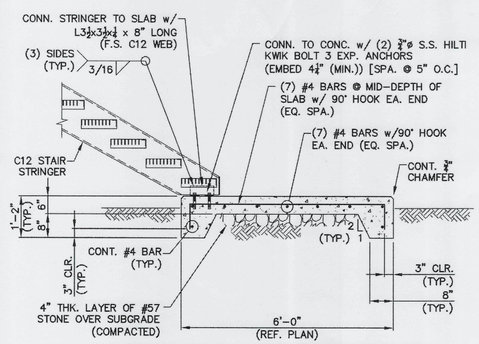

8 - SECTION - THRU STAIR LANDING PAD

SCALE: 1/2" = 1'-0"

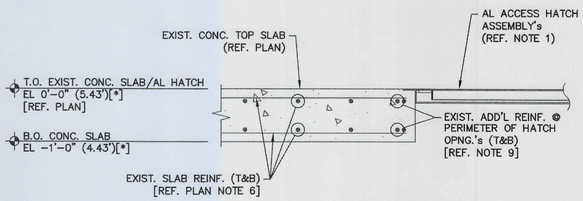

9 - SECTION - THRU EXIST. ACCESS HATCH MODS

SCALE: 3/4" = 1'-0"

NOTES:
1. ACCESS HATCH ASSEMBLY's TO INCLUDE THE FOLLOWING:
a.) AL TREAD COVER PLATE.
b.) S.S. HARDWARE, SLAM LOCK w/ KEY & HOLD OPEN ARM.
c.) RECESSED LIFT HANDLES.
d.) HINGED & LOCKABLE PROTECTIVE GRATING PANEL w/ SAFETY ORANGE COLOR COATING.
e.) H-20 TRAFFIC LOADING.
f.) EPDM GASKET/CUSHION.
g.) AL EXTRUDED ANGLE FRAME w/ CONT. CONC. EMBED ANCHOR REMOVED. ALL SURFACES IN CONTACT w/ CONC. SHALL BE SHIPPED FROM FACTORY w/ BITUMASTIC TYPE COATING.
h.) MFG.'s LIFETIME GUARANTEE.

FOUNDATION PLAN NOTES:

1. REFERENCE ELEVATION FOR THE ELECTRICAL BUILDING ADDITION AT THE EXISTING LIFT STATION FACILITY IS THE EXISTING LIFT STATION BLDG.'s OPERATING FLOOR LEVEL TOP SLAB T.O. CONC. EL 0'-0" = EL 0'-0" (5.50'). CONTRACTOR SHALL VERIFY VERTICAL DATUM INDICATED EQUALS N.A.V.D.-88. REFERENCE ELECTRICAL SITE PLAN DRAWINGS FOR ADDITIONAL INFORMATION.
2. GRADE ELEVATION AROUND THIS STRUCTURE IS 5.00'(±)[*]. REFERENCE ELECTRICAL SITE PLAN DRAWINGS FOR ADDITIONAL INFORMATION.
3. PREPARE SUBGRADE FOR THIS FACILITY PER "FOUNDATIONS" STRUCTURAL GENERAL NOTES 3.1, 3.2 & 3.6 ON DWG. S00.0.
4. EQUIPMENT LAYOUTS ARE SHOWN FOR GENERAL INFO ONLY. REFERENCE ELECTRICAL & EQUIPMENT VENDOR DRAWINGS FOR LOCATIONS & INFO REGARDING SLAB & WALL PENETRATIONS AND PIPING, CONDUIT & MISCELLANEOUS EQUIPMENT LAYOUTS EITHER SHOWN OR NOT SHOWN.
5. REGARDING C.I.P. REINFORCED CONCRETE PIER ASSEMBLY's NOTE THE FOLLOWING:
   a.) P1 = 1'-3"ø CONCRETE SECTIONS.
   b.) P2 = 1'-6"ø CONCRETE SECTIONS.
6. RECORD DRAWING's REVIEWED INDICATED VARIED REINFORCING ASSEMBLIES. NOTE THE FOLLOWING:
   a.) IN GENERAL BTM. REINF. = #6, #8 AND/OR #9 BARS SPA. @ 1'-0"(*) O.C. DEPENDING UPON LOCATION & DIRECTION OF SPAN.
   b.) IN GENERAL TOP REINF. = #6, #7 AND/OR #8 BARS SPA. @ 1'-0"(*) O.C. DEPENDING UPON LOCATION & DIRECTION OF SPAN.
   c.) ADDITIONAL #6 BARS AROUND PERIMETER OF DRY WELL HATCH OPENING's.
   d.) ADDITIONAL #8 BARS AROUND PERIMETER OF WET WELL HATCH OPENING's.
7. ACCESS HATCH MODIFICATIONS IN GENERAL INCLUDES REMOVAL OF THE EXISTING HATCH COVERS & INSTALLATION OF NEW ALUMINUM CHECKERED PLATE ACCESS HATCH ASSEMBLIES. REGARDING NEW HATCH ASSEMBLIES NOTE THE FOLLOWING:
   a.) COVERS SHALL BE FLUSH MOUNTED w/ THE EXISTING T.O. CONC. SLABS.
   b.) COVERS OVER WET WELL OPNG.'s SHALL BE HINGED ASSEMBLIES.
   c.) COVERS OVER DRY WELL OPNG.'s SHALL BE REMOVABLE ASSEMBLIES.
8. SAW-CUT EXIST. CMU WALL & EXISTING ELECTRICAL GEAR HOUSEKEEPING PAD FOR DOOR & FRAME AND LINTEL BEAM ASSEMBLY's. REFERENCE SECTIONS & DETAILS FOR ADDITIONAL INFORMATION.
9. "(DX)" SYMBOL ON PLANS REFERS TO DOOR ASSEMBLY MARK NUMBERS. DOOR ASSEMBLY's SHALL INCLUDE BUT NOT LIMITED TO THE FOLLOWING:
   a.) MATERIALS = STEEL HOLLOW CORE PANEL & STEEL FRAME ASSEMBLY w/ PAINTED FINISH.
   b.) ACCESSORIES FOR DOORS SHALL INCLUDE WINDOW PANES, DOOR LEVERS, CLOSER, CYLINDER & DEADBOLT LOCKS, PANIC HARDWARE, SILENCER, KICK PLATE & THRESHOLD.
   c.) COLOR TO MATCH EXISTING DOORS.
   d.) REFERENCE DOOR DWG. SCHEDULE & DETAILS AND PROJECT SPECIFICATIONS FOR ADDITIONAL INFORMATION.
10. REFERENCE DWG. S0.00 FOR ADDITIONAL GENERAL NOTES, MATERIAL SPECIFICATIONS & REQUIREMENTS, DESIGN CRITERIA AND LEGEND.

REV.NO.	DESCRIPTION	DATE
0	ISSUED FOR BID	FEB 2021

REVISIONS

WILLIAM F. BAND LICENSE No. 67838 STATE OF FLORIDA PROFESSIONAL ENGINEER 03-16-21

WILLIAM F. BAND, P.E. No. 67838

McKIM&CREED
1365 Hamlet Avenue
Clearwater, Florida 33756
Phone: (727) 442-7196, Fax: (727) 461-3827
CA Lic. No. 29588
www.mckimcreed.com

Manatee County FLORIDA

LIFT STATION 12A ELECTRICAL PUMP & VFD REHABILITATION

STRUCTURAL

LIFT STA. MODS & ELECTR. BLDG. FDN. PLAN, SECTIONS & DETAILS

PROJ. START DATE:	2020. JUN
MCE PROJ. #	01024-0181
DRAWN	DAR / WFB
DESIGNED	WFB
CHECKED	WFB / AEA
PROJ. MGR.	AAH

SCALE
HORIZONTAL: AS NOTED
VERTICAL: NA

S1.00
DRAWING NUMBER
0
REVISION

STATUS: **ISSUED FOR BID**

I:\01024\0181\WATER\80-DRAWINGS\STRUCTURAL\S100-SC101-10240181.DWG 03/16/2021 13:04:20 DANIEL RODRIGUEZ

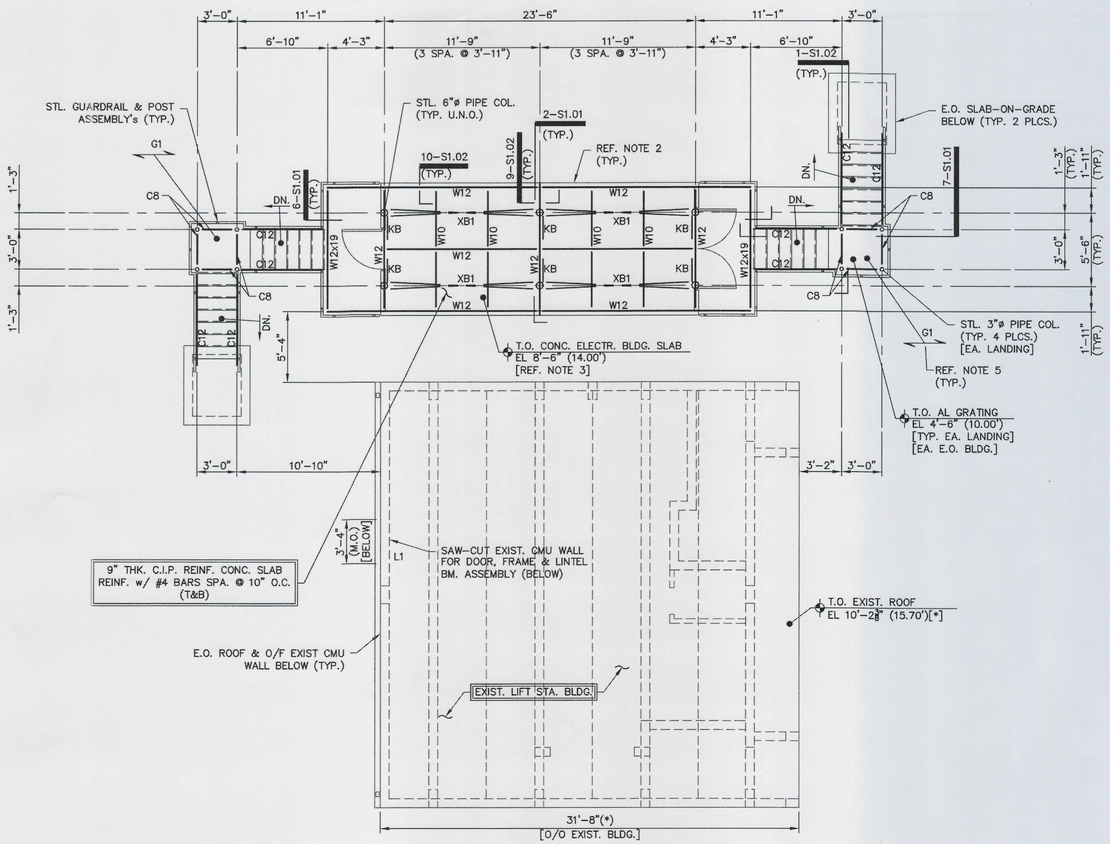

NORTH

1 - PLAN - EXIST. LIFT STATION MODS & ELECTRICAL BLDG. FRAMING LAYOUT

SCALE: 3/16" = 1'-0"

NOTES:
1. REFERENCE BLDG. MFG.'s "APPROVED" SUBMITTAL FOR WALL THICKNESS & CONNECTIONS TO THE SLAB-ON-GRADE.
2. PREPARE COMPACTED SUBGRADE IN CONFORMANCE w/ THE PROJECT GEOTECHNICAL REPORT.
3. COORD. w/ OWNER DURING SHOP DWG. SUBMITTAL REVIEWS DURING CONSTR. REGARDING BLOCK EXTERIOR SURFACE FINISH TO BE PROVIDED.

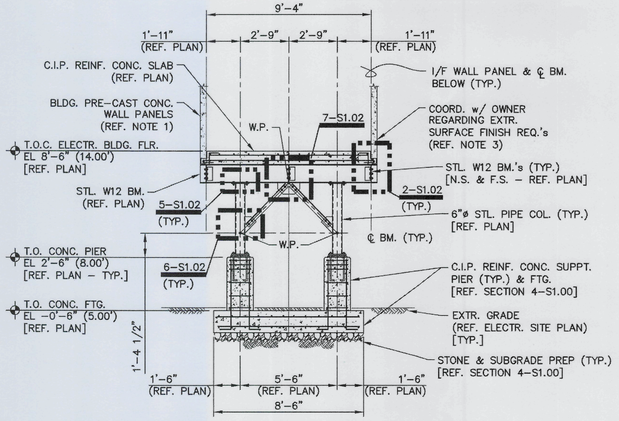

2 - SECTION - THRU ELECTR. BLDG. SUPPT. ASSEMBLY

SCALE: 1/4" = 1'-0"

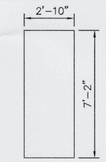

3 - DETAIL - EXIST. BLDG. MOD.'s DOOR TYPES

SCALE: 1/4" = 1'-0"

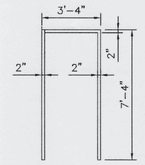

4 - DETAIL - EXIST. BLDG. MOD's DOOR FRAME TYPES

SCALE: 1/4" = 1'-0"

DOOR & FRAME SCHEDULE

DOOR NO.	UL LABEL	DOOR SIZE WIDTH	DOOR SIZE HEIGHT	DOOR SIZE THK.	DOOR MAT'L	DOOR TYPE	DOOR GLAZING	FRAME MAT'L	FRAME TYPE	FRAME DETAILS HEAD	FRAME DETAILS JAMB	FRAME DETAILS SILL	HDW. SET	REMARKS
(D1)	N/A	2'-10"	7'-2"	1¾"	AL	A	N/A	AL	1	*1	*1	*1	*2	REF. 3-S1.01 & 4-S1.01

MATERIAL LEGEND:

AL - ALUMINUM
IAL - INSULATED ALUMINUM
SCW-SOLID CORE WOOD
SCW-HALF GLASS [WOOD]
FRP - FIBERGLASS REINFORCED PLASTIC
STL - STEEL
F - FLUSH
FG [W] - FULL GLASS [WOOD]
HM - HOLLOW METAL
LAM - LAMINATE
SLG - SIDE LIGHT GLASS

*1 - REF. ?.S1.01 FOR HEAD, JAMB & SILL DETAILS.
*2 - REF. PLAN NOTES & PROJECT SPECS.

5 - SCHEDULE - DOORS & FRAMES

SCALE: N.T.S.

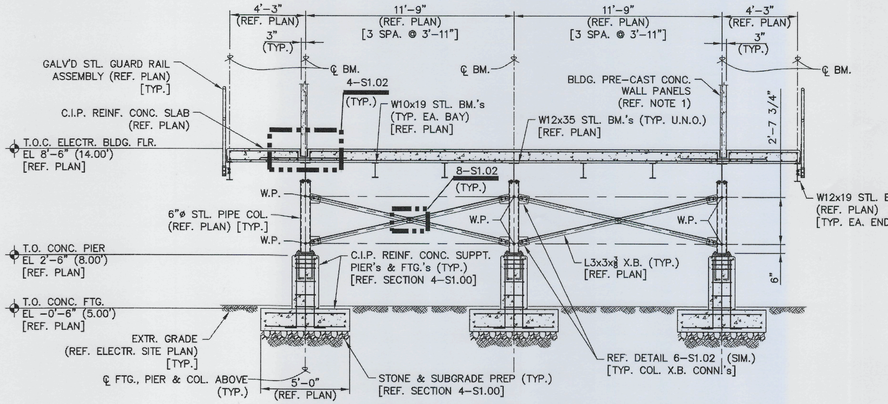

6 - SECTION - THRU ELECTR. BLDG. SUPPT. ASSEMBLY

SCALE: 1/4" = 1'-0"

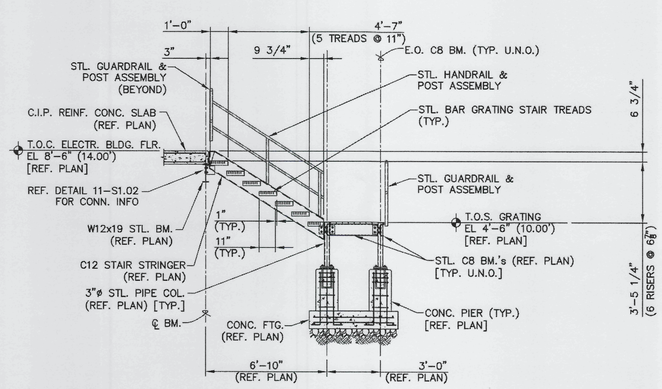

7 - SECTION - THRU "HI" EAST ACCESS STAIR ASSEMBLY

SCALE: 1/4" = 1'-0"

FRAMING PLAN NOTES:

1. REFERENCE ELEVATION FOR THE ELECTRICAL BUILDING ADDITION AT THE EXISTING LIFT STATION FACILITY IS THE EXISTING LIFT STATION BLDG.'s OPERATING FLOOR LEVEL TOP SLAB T.O. CONC. EL 0'-0" = EL 0'-0" (5.50'). CONTRACTOR SHALL VERIFY VERTICAL DATUM INDICATED EQUALS N.A.V.D.-88. REFERENCE ELECTRICAL SITE PLAN DRAWINGS FOR ADDITIONAL INFORMATION.
2. APPROXIMATE OUTLINE OF 24'-0" LONG x 10'-0" WIDE PRE-CAST CONCRETE ELECTRICAL BUILDING ASSEMBLY. REFERENCE ELECTR. DWG.'s & PROJECT SPECIFICATIONS FOR ADD'L INFO.
3. EQUIPMENT LAYOUTS ARE SHOWN FOR GENERAL INFO ONLY. REFERENCE ELECTRICAL & EQUIPMENT VENDOR DRAWINGS FOR LOCATIONS & INFO REGARDING SLAB & WALL PENETRATIONS AND PIPING, CONDUIT & MISCELLANEOUS EQUIPMENT LAYOUTS EITHER SHOWN OR NOT SHOWN.
4. REGARDING STEEL FRAMING ASSEMBLIES NOTE THE FOLLOWING:
   W12 = W12x35 WIDE FLANGE SECTION.
   C12 = C12x20.7 CHANNEL SECTION
   W10 = W10x19 WIDE FLANGE SECTION.
   C8 = C8x11.5 CHANNEL SECTION.
   6"ø = SCHEDULE 80 PIPE SECTION.
   3"ø = SCHEDULE 40 PIPE SECTION.
   KB = L3x3x3/8 ANGLE SECTION.
   XB1 = L3x3x3/8 ANGLE SECTION.
5. " ——— " SYMBOL ON PLAN INDICATES SPAN DIRECTION OF THE STEEL BAR GRATING ASSEMBLIES MAIN BEARING BARS. IN GENERAL GRATING ASSEMBLIES ARE TO BE MANUFACTURED BY REPUTABLE VENDOR(S) EXPERIENCED IN MANUFACTURING THE ASSEMBLIES REQUIRED. GRATING ASSEMBLIES ARE TO INCLUDE RECTANGULAR MAIN BEARING BARS, RECTANGULAR CROSS BARS OR RODS AND RECTANGULAR BEARING BARS ALONG PERIMETERS OF PANELS AND OPENINGS. FABRICATE ASSEMBLIES w/ GALV'D STEEL FINISH & CONNECTED TO FORM STANDARD PANEL WIDTHS. REFERENCE PLANS, SECTIONS & DETAILS FOR ADDITIONAL INFORMATION & REQUIREMENTS. NOTE THE FOLLOWING:
   a.) GRATING "G1" = 1¼" LIGHT DUTY WELDED STEEL IN ACCORDANCE w/ MFG.'s 19-4 "W" SERIES SPACE PROFILE.
   b.) GRATING PANELS SHALL BE ANCHORED TO STEEL FRMG. w/ GALV'D STL. FASTENERS & TYPE AS RECOMMENDED BY THE MANUFACTURER.
   c.) COORDINATE w/ THE OWNER REGARDING PANEL ASSEMBLIES INCLUDING SERRATED TOP SURFACE SKID FINISH FOR SLIP RESISTANCE.
6. REFERENCE DWG. S0.00 FOR ADDITIONAL GENERAL NOTES, MATERIAL SPECIFICATIONS & REQUIREMENTS, DESIGN CRITERIA AND LEGEND.

REV.NO.	DESCRIPTION	DATE
0	ISSUED FOR BID	FEB 2021

REVISIONS

WILLIAM F. BAND LICENSE No. 67838 STATE OF FLORIDA PROFESSIONAL ENGINEER SEAL 03-16-21

WILLIAM F. BAND, P.E. No. 67838

McKIM&CREED
1365 Hamlet Avenue
Clearwater, Florida 33756
Phone: (727) 442-7196, Fax: (727) 461-3827
CA Lic. No. 29588
www.mckimcreed.com

Manatee County FLORIDA

LIFT STATION 12A ELECTRICAL PUMP & VFD REHABILITATION

STRUCTURAL

LIFT STA. MODS & ELECTR. BLDG. FRMG. PLAN, SECTIONS & DETAILS

PROJ. START DATE:	2020. JUN
MCE PROJ. #	01024-0181
DRAWN	DAR / WFB
DESIGNED	WFB
CHECKED	WFB / AEA
PROJ. MGR.	AAH

SCALE
HORIZONTAL: AS NOTED
VERTICAL: NA

S1.01 DRAWING NUMBER
0 REVISION

STATUS: **ISSUED FOR BID**

I:\01024\0181\WATER\80-DRAWINGS\STRUCTURAL\S101-SF101-10240181.DWG 03/16/2021 11:50:28 DANIEL RODRIGUEZ

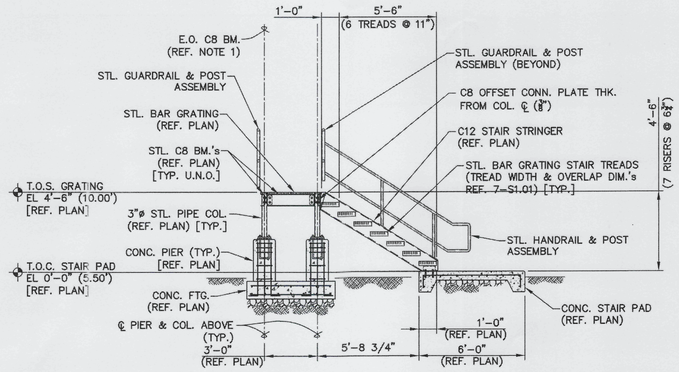

1 - SECTION - THRU "LO" EAST ACCESS STAIR ASSEMBLY

SCALE: 1/4" = 1'-0"

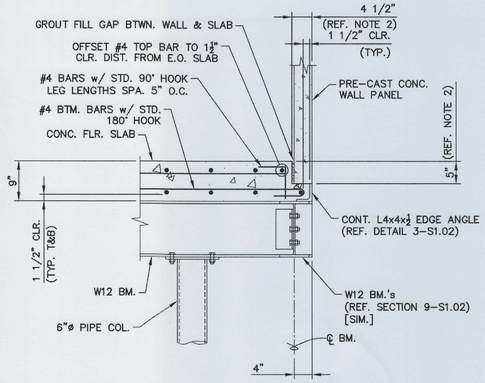

2 - DETAIL - E.O. ELECTR. BLDG. SLAB REINF. & FRMG.

SCALE: 3/4" = 1'-0"

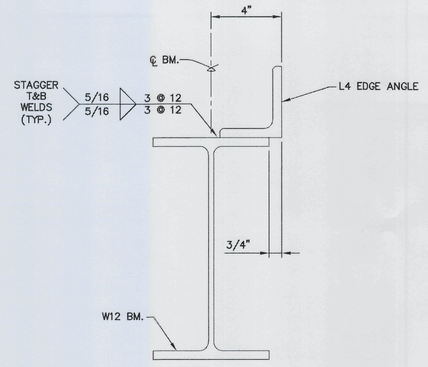

3 - DETAIL - TYP. W12 / L4 CONN.

SCALE: 3" = 1'-0"

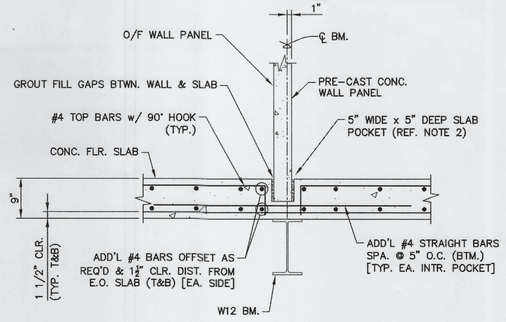

4 - DETAIL - INTR. ELECTR. BLDG. SLAB REINF.

SCALE: 3/4" = 1'-0"

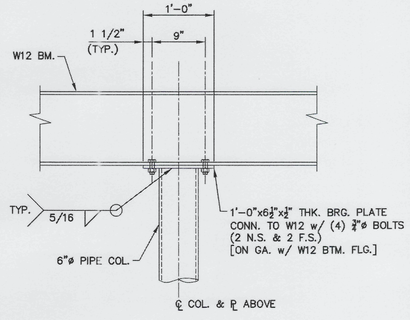

5 - DETAIL - 6"Ø PIPE COL. / W12 BM. CONN.

SCALE: 1" = 1'-0"

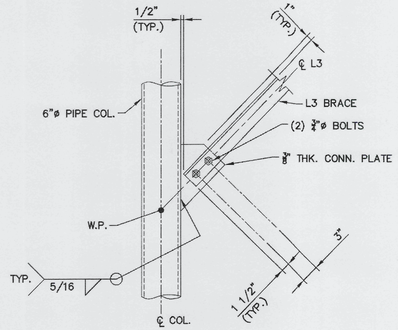

6 - DETAIL - 6"Ø PIPE COL. / L3 K.B. CONN.

SCALE: 1" = 1'-0"

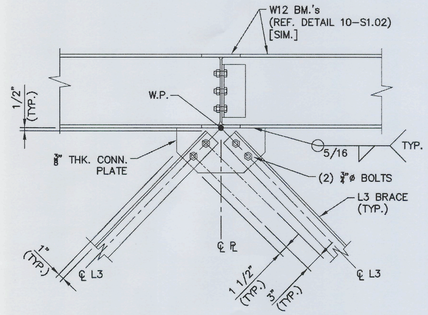

7 - DETAIL - W12 BM. / L3 K.B. CONN.

SCALE: 1" = 1'-0"

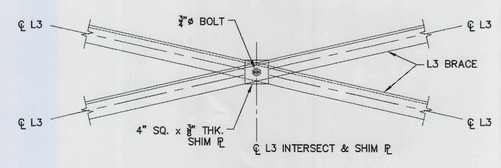

8 - DETAIL - L3 / L3 X.B. CONN.

SCALE: 1" = 1'-0"

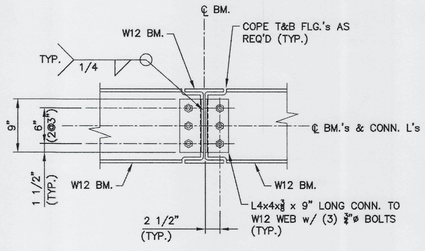

9 - SECTION - W12 BM. / W12 BM. CONN.

SCALE: 1" = 1'-0"

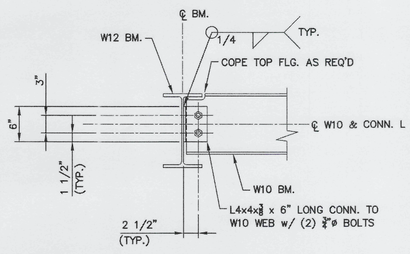

10 - SECTION - W12 BM. / W10 BM. CONN.

SCALE: 1" = 1'-0"

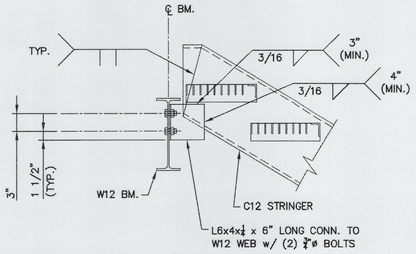

11 - DETAIL - W12 BM. / C12 STRINGER CONN.

SCALE: 1" = 1'-0"

NOTES:

1. IN GENERAL THE FLAT E.O. CHANNEL FLG.'s/WEB's EQUALS THE COLUMN CENTERLINE & OFFSET CONNECTION TAB PLATES AS REQUIRED U.N.O..
2. SLAB POCKET DEPTH & WIDTH PER REQ.'s OF THE PRECAST BLDG. MFG..
3. REFERENCE DWG. S0.00 FOR ADDITIONAL GENERAL NOTES, MATERIAL SPECIFICATIONS & REQUIREMENTS, DESIGN CRITERIA AND LEGEND.

REV.NO.	DESCRIPTION	DATE
0	ISSUED FOR BID	FEB 2021

REVISIONS

WILLIAM F. BAND, P.E. No. 67838 — STATE OF FLORIDA — PROFESSIONAL ENGINEER

McKIM&CREED
1365 Hamlet Avenue
Clearwater, Florida 33756
Phone: (727) 442-7196, Fax: (727) 461-3827
CA Lic. No. 29588
www.mckimcreed.com

Manatee County FLORIDA

LIFT STATION 12A ELECTRICAL PUMP & VFD REHABILITATION

STRUCTURAL

LIFT STA. MODS ADD'L SECTIONS & DETAILS

PROJ. START DATE:	2020. JUN
MCE PROJ. #	01024-0181
DRAWN	DAR / WFB
DESIGNED	WFB
CHECKED	WFB / AEA
PROJ. MGR.	AAH

SCALE — HORIZONTAL: AS NOTED — VERTICAL: NA

S1.02 DRAWING NUMBER

0 REVISION

STATUS: **ISSUED FOR BID**

1 ABBREVIATIONS

NOTE: ALL ABBREVIATIONS MAY NOT BE UTILIZED FOR THIS PROJECT

A, AMP	AMPERE
AFD	ADJUSTABLE FREQUENCY DRIVE
AFF	ABOVE FINISHED FLOOR
AFG	ABOVE FINISHED GRADE
AHU	AIR HANDLING UNIT
AIC	AMPERE INTERRUPTING CAPACITY
AIT	ANALYTICAL INDICATION TRANSMITTER
AL	ALUMINUM
ARMS	ARC-FLASH REDUCTION SYSTEM
ATS	AUTOMATIC TRANSFER SWITCH
AUX	AUXILIARY
AWG	AMERICAN WIRE GAUGE
AQD	ARC QUENCHING DEVICE
BKR	BREAKER
BLDG	BUILDING
BV	BUTTERFLY VALVE
C	CONDUIT
CAB	CABINET
CB	CIRCUIT BREAKER
CBV	CABLE BY VENDOR, INSTALLED BY CONTRACTOR
CCTV	CLOSED CIRCUIT TELEVISION
CKT	CIRCUIT
CLG	CEILING
CL2	CHLORINE
CP	CONTROL PANEL
CPT	CONTROL POWER TRANSFORMER
CR	CONTROL RELAY, CORROSION RESISTANT
CS	CONTROL STATION
CT	CURRENT TRANSFORMER
CTRL	CONTROL
CU	COPPER
CV	CONTROL VALVE
DB	DECIBEL
DC	DIRECT CURRENT
DCS	DISTRIBUTED CONTROL SYSTEM
DETD	DUAL ELEMENT TIME DELAY
DISC	DISCONNECT
DN	DOWN
DPDT	DOUBLE POLE DOUBLE THROW
DS	DISCONNECT SWITCH
DWG	DRAWING
EC	EMPTY CONDUIT
EF	EXHAUST FAN
EHH	ELECTRICAL HANDHOLE
EL, ELEV	ELEVATION
ELTU	ELECTRONIC TRIP UNIT
EMER	EMERGENCY
EMH	ELECTRICAL MANHOLE
EMT	ELECTRICAL METALLIC TUBING
ENCL	ENCLOSURE
EPRF	EXPLOSION PROOF
EQUIP	EQUIPMENT
EWC	ELECTRIC WATER COOLER
EWH	ELECTRIC WATER HEATER
EXIST	EXISTING
FA	FIRE ALARM
FAAP	FIRE ALARM ANNUNCIATOR PANEL
FACP	FIRE ALARM CONTROL PANEL
FDR	FEEDER
FIXT	FIXTURE
FLA	FULL LOAD AMPS
FLOUR	FLUORESCENT
FMC	FLEXIBLE METALLIC CONDUIT
FS	FLOW SWITCH
FT	FEET OR FOOT
FUT	FUTURE
FVNR	FULL VOLTAGE NON-REVERSING STARTER
FWE	FURNISHED WITH EQUIPMENT
G, GND	GROUND
GALV	GALVANIZED
GEC	GROUNDING ELECTRODE CONDUCTOR
GEN	GENERATOR
GFI	GROUND FAULT INTERRUPTER
GFIC	GROUND FAULT CIRCUIT INTERRUPTER
HDG	HOT DIPPED GALVANIZED
HH	HANDHOLE
HOA	HAND-OFF-AUTO
HP	HORSE POWER
HPF	HIGH POWER FACTOR
HPS	HIGH PRESSURE SODIUM
HTR	HEATER
HV	HIGH VOLTAGE
HZ	HERTZ
ID	INTERIOR DIAMETER
IMC	INTERMEDIATE METALLIC CONDUIT (GALVANIZED)
IMT	INTERMEDIATE METALLIC
IN, "	INCHES
ITB	INSTRUMENT TERMINAL BOX
JB	JUNCTION BOX
K	THOUSAND
KA	KILOVOLT AMPERE
KAIC	THOUSAND AMPERES INTERRUPTING CURRENT
KCMIL	THOUSAND CIRCULAR MILLS
KVA	THOUSAND VOLT AMPERES
KW	KILOWATTS
KWH	KILOWATT-HOURS
LA	LIGHTNING ARRESTOR
LCP	LOCAL CONTROL PANEL
LED	LIGHT-EMITTING DIODE
LFMC	LIQUIDTIGHT FLEXIBLE METAL CONDUIT
LFNC	LIQUIDTIGHT FLEXIBLE NONMETALLIC CONDUIT
LIT	LEVEL INDICATION TRANSMITTER
LP	LIGHTING PANEL, LIGHT POLE
LS	LEVEL SWITCH
LTG	LIGHTING
LV	LOW VOLTAGE
M	MOTOR
MA	MILLIAMPERE
MCB	MAIN CIRCUIT BREAKER
MCC	MOTOR CONTROL CENTER
MCP	MOTOR CIRCUIT PROTECTOR
MDP	MAIN DISTRIBUTION PANEL
MFR	MANUFACTURER
MH	MANHOLE
MIN	MINIMUM
MLO	MAIN LUGS ONLY
MSB	MAIN SWITCHBOARD
MTD	MOUNTED/MOUNTING
MTG	MOUNTING
MTS	MANUAL TRANSFER SWITCH
MV	MEDIUM VOLTAGE
NA	NON-AUTOMATIC
N/A	NOT APPLICABLE
NC	NORMALLY CLOSE
NEC	NATIONAL ELECTRIC CODE
N, NEU	NEUTRAL
NO	NORMALLY OPEN
NIC	NOT IN CONTRACT
NTS	NOT TO SCALE
OFCI	OWNER FURNISHED, CONTRACTOR INSTALLED
OL	OVERLOAD RELAY
P	POLE
PA	PUBLIC ADDRESS
PB	PUSH BUTTON
P/B	PULL BOX
PCP	PUMP CONTROL PANEL
PF	POWER FACTOR
PFC	POWER FACTOR CORRECTION CAPACITORS
PFD	PULL FUSE DISCONNECT
ϕ, PH	PHASE
PIT	PRESSURE INDICATION TRANSMITTER
PLC	PROGRAMMABLE LOGIC CONTROLLER
PNL	PANEL
PP	POWER PANEL, POWER POLE
PR	PAIR
PRI	PRIMARY
PS	PRESSURE SWITCH
PT	POTENTIAL TRANSFORMER
PTZ	PAN-TILT-ZOOM
PVC	POLYVINYL CHLORIDE
REC	RECEPTACLE
REQ'D	REQUIRED
RGS	RIGID GALVANIZED STEEL
RMC	RIGIDREMOTE TELEMETRY UNIT
R/S	RUN/STOP HAND SWITCH
RVSS	REDUCED VOLTAGE SOFT STARTER
SCCR	SHORT CIRCUIT CURRENT RATING
SCADA	SUPERVISORY CONTROL AND DATA ACQUISITION
SEC	SECONDARY
SP	SPARE
SPEC	SPECIFICATION
SPD	SURGE PROTECTION DEVICE
SS	SELECTOR SWITCH
SST	STAINLESS STEEL
SV	SOLENOID VALVE
SW	SWITCH
SWBD	SWITCHBOARD
SWGR	SWITCH GEAR
TEL	TELEPHONE
TEMP	TEMPERATURE
TEW	THERMOCOUPLE EXTENSION WIRE
TMTU	THERMAL-MAGNETIC TRIP UNIT
TS	TEMPERATURE SWITCH
TYP	TYPICAL
UG	UNDERGROUND
UH	UNIT HEATER
UON	UNLESS OTHERWISE NOTED
UPS	UNINTERRUPTIBLE POWER SUPPLY
V	VOLTS
VAC	VOLTS ALTERNATING CURRENT
VFD	VARIABLE FREQUENCY DRIVE
WH	WATT-HOUR
WP	WEATHERPROOF
XFMR	TRANSFORMER
XP	EXPLOSION PROOF

2 FIRE ALARM SYSTEM

A/V 110	AUDIO/VISUAL ALARM INDICATOR (HORN/STROBE) NUMBER INDICATES STROBE CANDELLA RATING WHEN OTHER THAN 15
H	HORN
F	MANUAL PULL STATION
FACP	FIRE ALARM CONTROL PANEL
B	BELL
FAAS	FIRE ALARM ANNUNCIATOR STATION
FS	FLOW SWITCH
TS	VALVE TAMPER SWITCH
	END OF LINE RESISTOR
FD	FLAME DETECTOR
SD	SMOKE DETECTOR, MULTISENSOR
SD I	SMOKE DETECTOR IONIZATION
SD P	SMOKE DETECTOR PHOTOELECTRIC
SD D	DUCT MOUNTED SMOKE DETECTOR
SD H	THERMAL DETECTOR (FIXED AND RATE OF RISE) H-HIGH TEMPERATURE
CT	SIGNAL INPUT MODULE
CC1	SIGNAL MODULE

4 GENERAL ELECTRICAL NOTES

1. CONTRACTOR RESPONSIBILITIES:

1.1. THE CONTRACTOR SHALL READ AND UNDERSTAND THE ENTIRE SET OF CONSTRUCTION DOCUMENTS. THIS INCLUDES BUT IS NOT LIMITED TO THE PLANS AND SPECIFICATIONS FOR ALL DISCIPLINES. THIS WILL ENSURE THAT HE UNDERSTANDS THE FULL SCOPE OF WORK AND IS ABLE TO CONVEY THE REQUIRED MATERIALS AND METHODS OF INSTALLATION TO THE HIS ESTIMATORS, SUPPLIERS AND INSTALLERS.
1.2. THE CONTRACTOR SHALL VISIT THE SITE AND FAMILIARIZE HIMSELF WITH THE EXISTING CONDITIONS.
1.3. PROVIDE MEANS TO FURNISH AND INSTALL.
1.4. THESE DRAWINGS ARE DIAGRAMMATIC IN NATURE. DO NOT SCALE FROM THESE DRAWINGS.
1.5. WHERE JOB CONDITIONS REQUIRE CHANGES FROM THE CONTRACT DOCUMENTS THAT DO NOT CHANGE THE SCOPE OF INSTALLATION OR NATURE OF THE WORK REQUIRED, THE CONTRACTOR SHALL MAKE SUCH CHANGES WITHOUT ANY ADDITIONAL COST TO THE OWNER. NO OTHER CHANGES MAY BE MADE WITHOUT WRITTEN CONSENT FROM THE ENGINEER AND OWNER.
1.6. MOUNTING HEIGHTS INDICATED ARE TO THE CENTER OF THE DEVICE U.O.N.
1.7. REFERENCE ALL SPECIFICATIONS, DRAWINGS AND CONTRACT DOCUMENTS FOR ADDITIONAL REQUIREMENTS AND CONTRACT RESPONSIBILITIES PRIOR TO COMMENCING WORK.
1.8. THE GENERAL NOTES STATED ON THIS DRAWING ARE APPLICABLE TO ALL DRAWINGS AND SCOPE OF WORK UNDER THIS CONTRACT UNLESS NOTED OTHERWISE.
1.9. ALL ELECTRICAL WORK SHALL COMPLY WITH THE CURRENT NFPA, NEC, NESC AND LOCAL CODES INCLUDING OWNERS STANDARDS AND REQUIREMENTS.
1.10. CONTRACTOR SHALL COORDINATE WITH THE LOCAL ELECTRICAL UTILITY TO ESTABLISH NEW ELECTRICAL SERVICE(S) AND FINAL CONNECTIONS TO PROVIDE UTILITY POWER AS REQUIRED TO INCLUDE ESTABLISHING TEMPORARY UTILITY ACCOUNT TO PROVIDE ELECTRICAL POWER FOR START-UP AND COMMISSIONING.
1.11. THE ELECTRICAL INSTALLATION SHALL EXCEED THE REQUIREMENTS OF ALL APPLICABLE NECA/NEIS STANDARDS.
1.12. CONTRACTOR SHALL PLAN AND COORDINATE ELECTRICAL CONSTRUCTION WITH ALL CRAFT/TRADE TO ACHIEVE AN EFFICIENT AND EFFECTIVE ELECTRICAL INSTALLATION.
1.13. THE SCHEDULING AND DURATION OF ANY PROCESS OR FACILITY SHUTDOWN TO REMOVE AND/OR INSTALL EQUIPMENT SHALL BE COORDINATED IN ADVANCE WITH FACILITY MANAGEMENT, ENGINEER, OWNER OR OWNER REPRESENTATIVE.

2. ELECTRICAL EQUIPMENT:

2.1. 600V RATED ELECTRICAL EQUIPMENT SHALL HAVE AN AMPERE INTERRUPTING CAPACITY (AIC) RATINGS AS SHOWN ON THE CONTRACT DRAWINGS.
2.2. EQUIPMENT SHALL BE ARRANGED AND INSTALLED TO COMPLY WITH ALL CODE-REQUIRED, MANUFACTURER-RECOMMENDED AND HEAT-DISSIPATION CLEARANCES.
2.3. EQUIPMENT INSTALLATIONS AND PLACEMENTS SHALL COMPLY WITH NEC ARTICLE 110 FOR ALL CLEARANCE REQUIREMENTS.
2.4. EQUIPMENT SHALL FIT INTO THOSE SPACES AS SHOWN ON THE CONTRACT DRAWINGS. CONTRACTOR IS RESPONSIBLE TO PROVIDE EQUIPMENT WHICH MEETS THE SPACE REQUIREMENTS.
2.5. CONTRACTOR SHALL PROVIDE ALL NECESSARY COMPONENTS REQUIRED FOR MAKING FINAL CONNECTIONS FOR ALL EQUIPMENT INSTALLED AND/OR MODIFIED UNDER CONTRACT.

3. POWER AND CONTROL SYSTEM RACEWAYS:

3.1. EXPOSED CONDUIT SHALL BE RIGID ALUMINUM CONDUIT (RAC), GRS, IMC AND EMT ARE NOT ACCEPTABLE.
3.2. CONCEALED CONDUIT EMBEDDED IN CONCRETE SHALL BE SCH-40 PVC
3.4. DIRECT-BURIED CONDUIT SHALL BE DIRECT-BURIED SCH-80 PVC
3.5. TRANSITIONS THROUGH FINISHED GRADE AND/OR CONCRETE SHALL BE PVC-COATED RAC CONDUIT.
3.6. DRAWINGS DEPICT MAJOR DUCTBANK, CABLE-TRAY, BUS-DUCT, WIRE-WAY, TRENCH/FLOOR DUCTS, RACEWAY, CONDUIT, ETC., TO INCLUDE CABLE, CONDUCTOR AND WIRING IN SCHEMATIC AND/OR DIAGRAMMATIC FORMATS. THE CONTRACTOR SHALL REFERENCE ALL EQUIPMENT SPECIFICATIONS AND MANUFACTURER INSTRUCTIONS FOR ADDITIONAL INSTALLATION REQUIREMENTS.
3.7. RACEWAY INSTALLATION AND/OR ARRANGEMENT LAYOUTS ARE NOT TYPICALLY SHOWN ON THE DRAWINGS. CONTRACTOR SHALL DEVELOP LOGICAL GROUPINGS, ROUTING AND MARSHALLING OF DUCTBANK, CABLE-TRAY, BUS-DUCT, WIRE-WAY, TRENCH/FLOOR DUCT, RACEWAY, CONDUIT, ETC., THESE SHALL NOT BE ROUTED THROUGH OR INTERFERE WITH ANY STRUCTURAL ELEMENTS. CONTRACTOR SHALL SUBMIT THESE RACEWAY INSTALLATION AND/OR ARRANGEMENT LAYOUTS PER THE SPECIFICATIONS FOR ENGINEER REVIEW PRIOR TO INSTALLATION.
3.8. RACEWAY ROUTINGS SHALL BE ORGANIZED AND GROUPED IN A PRACTICAL MANNER TO MINIMIZE CROSS-OVERS AND SADDLES. RACEWAY INSTALLATIONS SHALL BE ARRANGED TO ENTER EQUIPMENT FOR DIRECT CONDUCTOR TERMINATIONS.
3.9. RACEWAYS SHALL BE INSTALLED CONCEALED UNLESS OTHERWISE NOTED OR SHOWN. THESE SHALL RUN PARALLEL TO LANDSCAPE AND STRUCTURAL FEATURES WHILE THE BENDS AND TURNS SHALL BE MADE BY MEANS OF LARGE RADII FITTINGS.
3.10. PROVIDE FLEXIBLE RACEWAY CONNECTIONS TO ALL EQUIPMENT SUBJECT TO MOVEMENT AND/OR VIBRATION. CONTRACTOR SHALL MAKE RACEWAY CONNECTIONS COMPLETE AND IN ACCORDANCE WITH THE SPECIFICATIONS.
3.11. CONTRACTOR SHALL PROVIDE ALL REQUIRED PULL BOXES, TERMINAL BOXES AND JUNCTION BOXES FOR INSTALLATION FOR THE WIRING SYSTEMS IN ACCORDANCE WITH THE SPECIFICATIONS THOUGH ALL BOXES MAY NOT BE INDICATED ON THE DRAWINGS.
3.12. SPARE CONDUITS SHALL BE CAPPED OR PLUGGED WITH A PVC FITTING AND INCLUDE 200# TEST POLYPROPYLENE PULL STRING.

4. CABLES/CONDUCTORS/WIRES:

4.1. GENERAL
4.1.1. QUANTITY AND SIZING OF CONDUCTORS, CABLING, WIRING AND RESPECTIVE RACEWAYS DEPICTED ON THE DRAWINGS ARE BASED UPON SELECTED STANDARD ELECTRICAL COMPONENTS OR EQUIPMENT WITH DIRECT ROUTED CONNECTIONS. CONTRACTOR MAY SUBMIT FOR REVIEW BY ENGINEER AND PRIOR TO INSTALLATION, LOGICAL CONDUCTOR AND RACEWAY GROUPINGS IN COMPLIANCE WITH APPLICABLE CODES, STANDARDS AND SPECIFICATIONS WITHOUT ADDITIONAL COST TO OWNER.
4.1.2. CONTRACTOR SHALL PROVIDE A CIRCUIT IDENTIFICATION LABEL AT EACH END OF EACH POWER, BRANCH, CONTROL AND INSTRUMENTATION CIRCUIT CABLE ASSEMBLY, CONDUCTOR OR WIRE.
4.2. POWER/FEEDER
4.2.1. CONTRACTOR SHALL NOT EXCEED CABLE MANUFACTURER SPECIFICATIONS FOR SIDE-WALL AND TENSION LIMITS WHEN DRAWING POWER CABLES INTO RACEWAYS.
4.2.2. CONTRACTOR SHALL DRAW POWER CABLES AND CONDUCTORS WITHIN RACEWAYS UTILIZING POLYWATER LUBRICANT J OR APPROVED EQUAL.
4.2.3. NO SPLICES TO POWER CONDUCTORS AND/OR CABLING SHALL BE MADE WITHOUT ENGINEER APPROVAL. NO JUNCTIONS SHALL BE MADE BELOW GRADE WITHOUT APPROVAL OF ENGINEER.
4.3. POWER/BRANCH
4.3.1. RACEWAY AND WIRING FOR LIGHTING, RECEPTACLES AND BRANCH CIRCUITS ARE NOT TYPICALLY SHOWN ON THE CONTRACT DRAWINGS BUT SHALL BE PROVIDED AS REQUIRED UNDER THIS CONTRACT

5. HARDWARE AND SUPPORTS:

5.1. ALL FASTENERS AND HARDWARE SHALL BE STAINLESS-STEEL 316L.
5.2. STRUT-CHANNEL SHALL NOT BE BENT, DRILLED, CUT OR OTHERWISE MODIFIED TO PRODUCE FITTINGS, BRACES OR BRACKETS FOR CONDUIT AND EQUIPMENT SUPPORTS.
5.3. MANUFACTURED STRUT-CHANNEL BRACES, BRACKETS, FITTINGS OR POST BASES SHALL BE PROVIDED AND INSTALLED WITH ASSOCIATED HARDWARE AND FASTENERS FOR CONDUIT AND EQUIPMENT SUPPORTS.
5.4. CONTRACTOR SHALL PROVIDE ALL SUPPORTS AND FASTENING HARDWARE FOR SWITCHBOARDS, PANELBOARDS, TRANSFORMERS, CONTROL PANELS, ETC., AS REQUIRED IN THE SPECIFICATIONS.
5.5. CONTRACTOR SHALL PROVIDE AND INSTALL CONCRETE EMBEDDED LEVELING CHANNEL SUPPORTS FOR FLOOR MOUNTED EQUIPMENT SPANNING DISTANCES 48" AND GREATER IN LENGTH OR 36" AND GREATER IN DEPTH.
5.6. STRUCTURAL MEMBERS SHALL NOT BE DRILLED, CUT, WELDED TO, OR OTHERWISE MODIFIED WITHOUT PRIOR APPROVAL OF THE ENGINEER OF RECORD.

6. RECEPTACLES/SWITCHES:

6.1. GENERAL
6.2.0.2. INDOORS OR NON PROCESS AREAS SHALL BE INSTALLED CONCEALED AND FLUSH WITH STAINLESS-STEEL DEVICE COVER PLATES.
6.2.0.3. OUTDOORS OR IN PROCESS AREAS SHALL BE INSTALLED WITHIN WEATHER-PROOF, CORROSION RESISTANT DEVICE BOXES WITH METALLIC IN-USE AND/OR WATER-TIGHT DEVICE COVER PLATES.
6.3. RECEPTACLES/GROUND FAULT CURRENT INTERRUPTING (GFCI)
6.3.1. SHALL BE INDIVIDUAL GFCI RECEPTACLE DEVICES RATED FOR 20A/120V WITH LED POWER INDICATOR.
6.3.2. GFCI RECEPTACLE DEVICES SHALL NOT SHARE NEUTRAL CONDUCTORS ON THREE-PHASE SYSTEMS

REV NO	DESCRIPTION	DATE
0	ISSUED FOR BID	MAR 2021

REVISIONS

SEAL
ARMAND AUBREY HAUDRICOURT LICENSE No 66861 STATE OF FLORIDA PROFESSIONAL ENGINEER
3-17-21
AUBREY A. HAUDRICOURT, P.E.
No. 66861

McKIM&CREED
1365 Hamlet Avenue
Clearwater, Florida 33756
Phone: (727) 442-7196, Fax: (727) 461-3827
CA Lic. No. 29588
www.mckimcreed.com

Manatee County FLORIDA

LIFT STATION 12A ELECTRICAL PUMP & VFD REHABILITATION

ELECTRICAL

SYMBOLS, ABBRIVIATIONS AND NOTES

PROJ. START DATE:	2020. JUN
MCE PROJ. #	01024-0181
DRAWN	JG
DESIGNED	SS
CHECKED	MAC
PROJ. MGR.	AAH

SCALE
HORIZONTAL: N/A
VERTICAL: TBD

E0.00
DRAWING NUMBER
0
REVISION

STATUS: ISSUED FOR BID

1 LIGHTING SYMBOLS

1–3 / a — FLUORESCENT LIGHTING FIXTURE – SURFACE OR PENDANT MOUNTED. FIRST NUMERAL DENOTES LIGHTING PANEL (LP1), SECOND NUMBER DENOTES BRANCH CIRCUIT NUMBER. LOWER CASE LETTER DENOTES SWITCHED CIRCUIT.

EM — FLUORESCENT LIGHTING FIXTURE WITH BATTERY PACK SURFACE OR PENDANT.

PENDANT OR CEILING MOUNTED LIGHTING FIXTURE.

WALL MOUNTED LIGHTING FIXTURE.

POLE OR STANCHION MOUNTED LIGHTING FIXTURE.

TWO (2) POLE OR STANCHION MOUNTED LIGHTING FIXTURES

GF — POLE MOUNTED FIXTURE WITH GF RECEPTACLE

EM — 2 LAMP SELF CONTAINED DC EMERGENCY LIGHTING UNIT. LETTER DENOTES FIXTURE TYPE.

EXIT SIGN WALL MOUNTED (SINGLE FACE WITH INDICATING ARROWS) WITH BATTERY PACK ARROW INDICATES DIRECTION OF EXIT DOOR

EXIT SIGN PENDANT MOUNTED (DOUBLE FACE WITH INDICATING ARROWS) WITH BATTERY PACK ARROWS INDICATE DIRECTION OF EXIT DOOR

D / 150 / 10'–0" AFF — FIXTURE DESIGNATION SYMBOL. SEE LIGHTING FIXTURE SCHEDULE FOR DESCRIPTION AND TYPE. ALL FIXTURES SHOWN IN A ROOM WITH THIS SYMBOL SHALL BE OF TYPE INDICATED BY LETTER; NUMBER IN SYMBOL INDICATES LAMP WATTAGE AND NUMBER OF LAMPS WHERE MORE THAN ONE (UNLESS OTHERWISE NOTED). NUMBER BELOW SYMBOL INDICATES MOUNTING HEIGHT ABOVE FINISHED FLOOR OR AS NOTED.

1–2 / GF/SS — DUPLEX CONVENIENCE RECEPTACLE, 2 POLE, 3 WIRE, 120 VOLTS A.C. 20 AMP RECEPTACLE DESIGNATIONS, FIRST NUMBER DENOTES PANEL, SECOND NUMBER DENOTES CIRCUIT NUMBER. GF–DENOTES GROUND FAULT TYPE. SS–DENOTES SURGE SUPPRESSION TYPE WP–DENOTES WEATHERPROOF ENCLOSURE

SINGLE CONVENIENCE RECEPTACLE, 2 POLE, 3 WIRE; 120 VOLTS AC. 20 AMP UNLESS NOTED OTHERWISE ON DRAWINGS.

POWER RECEPTACLE, 2 POLE, 3 WIRE 250 VOLTS A.C. 20 AMP UNLESS NOTED OTHERWISE ON DRAWINGS.

PU — PAGING UNIT

LS — PAGING UNIT SPEAKER

S^a — SINGLE POLE SWITCH – LOWER CASE LETTER DENOTES SWITCHING.

S_2 — TWO POLE SWITCH

S_3 — THREE–WAY SWITCH

S_4 — FOUR–WAY SWITCH

S^a_T — 24V DC MOMENTARY CONTACT SWITCH – LOWER CASE DENOTES SWITCHING

S^a_D — DIMMING SWITCH – LOWER CASE DENOTES SWITCHING

S_{M2} — MANUAL MOTOR STARTER – NUMBER DENOTES NUMBER OF POLES WHEN MORE THAN ONE.

S_V — VARIABLE SPEED FAN SWITCH

LP1–2 — BRANCH CIRCUIT HOME RUN TO PANELBOARD LETTERS AND NUMERALS INDICATE PANEL AND CIRCUIT NUMBER. AS A MINIMUM, ALL WIRING SHALL BE 3#12 AWG IN 3/4" CONDUIT. #10 AWG WIRE SHALL BE USED FOR RUNS BETWEEN PANEL AND FIRST LIGHTING FIXTURE OR RECEPTACLE EXCEEDING 50 FEET, UNLESS OTHERWISE NOTED ON DRAWING.

J — LP1–2 / 10 — LETTERS AND NUMBERS INDICATE PANEL AND CIRCUIT NUMBER (LP1–2). CROSS LINES INDICATE NUMBER OF CONDUCTORS. HALF HASH MARKS INDICATES NEUTRAL. NUMBER (10) DENOTES WIRE SIZE WHEN NOT #12 AWG. CONTINUE CONDUIT AND WIRE RUN FROM BOX TO DEVICE IN ROOM OR AREA AS NOTED BY BRANCH CIRCUIT NUMBER. #10 AWG WIRING SHALL BE USED FOR RUNS BETWEEN PANEL AND FIRST LIGHTING FIXTURE OR RECEPTACLE EXCEEDING 50 FEET, UNLESS OTHERWISE NOTED ON DRAWING.

INDICATES GROUND CONDUCTOR

C12 — INDICATES HOMERUN AND CONDUIT TAG

LIGHTING, APPLIANCE OR INSTRUMENT PANELBOARD

POWER PANELBOARD

CP — CP – CONTROL PANEL

MCC — MOTOR CONTROL CENTER

T — THERMOSTAT

MD — MOTORIZED DAMPER

LM — LOUVER MOTOR

M 1–24 / M 1–24 / UH 1–24 OR — MOTOR, UNIT HEATER–NUMERAL DENOTES LIGHTING PANEL AND BRANCH CIRCUIT NUMBER. MOTOR SYMBOL SHOWN DASHED DENOTES EQUIPMENT LOCATED ON ROOF.

INDICATES NEW EQUIPMENT/EXPOSED CONDUIT

CONDUIT TURNING DOWN

CONDUIT TURNING UP

CONDUIT CAPPED

INDICATES EXISTING EQUIPMENT/CONDUIT

INDICATES CONDUIT UNDERGROUND OR CONCEALED IN CEILING, WALLS, BELOW OR IN FLOOR SLAB

DEMOLITION

EMH — ELECTRICAL MANHOLE

EHH — ELECTRICAL HANDHOLE

TMH — TELEPHONE MANHOLE

THH — TELEPHONE HANDHOLE

IMH — INSTRUMENTATION MANHOLE

IHH — INSTRUMENTATION HANDHOLE

CRAC — COMPUTER ROOM AIR CONDITIONER

EIS — EMERGENCY INVERTER SYSTEM

ATS — AUTOMATIC TRANSFER SWITCH

GROUND TEST POINT

GROUND ROD

GROUND GRID CABLE CONNECTION

GROUND

#4/0 GROUND CABLE BURIED 2'–6" BELOW GRADE UNLESS OTHERWISE NOTED

CLASS I COPPER LIGHTNING CONDUCTOR UNLESS OTHERWISE NOTED

PC — PHOTOCELL

DEVICE LOCATED IN FIELD AT OR NEAR MOTOR

DEVICE LOCATED IN CONTROL PANEL

IL / PT — INDICATING LIGHT, PT–DENOTES PUSH TO TEST TYPE LETTER INDICATES LENS COLOR

W–WHITE G–GREEN A–AMBER
R–RED B–BLUE C–CLEAR

SWITCH – TOGGLE OPEN

MOMENTARY CONTACT PUSH BUTTON NORMALLY OPEN

MOMENTARY CONTACT PUSH BUTTON NORMALLY CLOSED

LO STOP — MOMENTARY LOCKOUT STOP PUSHBUTTON

SWITCH – TEMPERATURE NORMALLY CLOSED. OPENS ON RISING TEMPERATURE

SWITCH – TEMPERATURE NORMALLY OPEN. CLOSES ON RISING TEMPERATURE

SWITCH – FLOW NORMALLY CLOSED

SWITCH – FLOW NORMALLY OPEN

SWITCH – LIMIT NORMALLY OPEN

SWITCH – LIMIT NORMALLY CLOSED

SWITCH – LIMIT HELD CLOSED

SWITCH – LIMIT HELD OPEN

SWITCH – LIQUID LEVEL NORMALLY OPEN. CLOSES ON RISING LEVEL

SWITCH – LIQUID LEVEL NORMALLY CLOSED. OPENS ON RISING LEVEL

SWITCH – PRESSURE NORMALLY CLOSED. OPENS ON RISING PRESSURE

SWITCH – PRESSURE NORMALLY OPEN. CLOSES ON RISING PRESSURE

VALVE LIMIT SWITCH (OPEN)

VALVE LIMIT SWITCH (CLOSED)

TORQUE SWITCH, OPENS ON RISING TORQUE

TORQUE SWITCH, CLOSES ON RISING TORQUE

CR1 — NORMALLY OPEN CONTACT, NUMBER INDICATES RELAY.

NORMALLY CLOSED CONTACT

OL — THERMALLY ACTUATED MOTOR OVERLOAD RELAY, LATCHES CLOSED ON OVERLOAD

OL — THERMALLY ACTUATED MOTOR OVERLOAD RELAY, LATCHES OPEN ON OVERLOAD

NOTC — NORMALLY OPENED CONTACT – TIMED CLOSED TIME DELAY AFTER COIL ENERGIZED

NCTO — NORMALLY CLOSED CONTACT– TIMED OPEN TIME DELAY AFTER COIL ENERGIZED

NOTO — NORMALLY OPEN CONTACT– TIMED OPEN TIME DELAY AFTER COIL DE–ENERGIZED

NCTC — NORMALLY CLOSED CONTACT– TIMED CLOSED TIME DELAY AFTER COIL DE–ENERGIZED

SOLENOID VALVE

M — MOTOR STARTER CONTACTOR COIL COIL DESIGNATION: M–COIL

S — MOTOR STARTER CONTACTOR COIL COIL DESIGNATION: S–SLOW

FT — MOTOR STARTER CONTACTOR COIL COIL DESIGNATION: FT–FAST

F — MOTOR STARTER CONTACTOR COIL COIL DESIGNATION: F–FOREWARD

R — MOTOR STARTER CONTACTOR COIL COIL DESIGNATION: R–REVERSE

1S — MOTOR STARTER CONTACTOR COIL COIL DESIGNATION: 1S–REDUCED VOLTAGE CONTACTOR COIL #1

2S — MOTOR STARTER CONTACTOR COIL COIL DESIGNATION: 2S–REDUCED VOLTAGE CONTACTOR COIL #2

RUN — MOTOR STARTER CONTACTOR COIL COIL DESIGNATION: R–RUN

CR — CONTROL RELAY COIL DESIGNATION: CR–CONTROL RELAY MX–AUXILIARY RELAY TR–TIMING RELAY AR–ALARM RELAY RR–READY RELAY

H A (X,O) / (O,X) — SELECTOR SWITCH, 2 POSITION MAINTAINED CONTACT

(O,X) DENOTES CONTACT BLOCK CONFIGURATION X INDICATES CONTACT CLOSED, O DENOTES CONTACT OPEN.

H O A — SELECTOR SWITCH, 3 POSITION MAINTAINED CONTACT

MAINTAINED CONTACT PUSH BUTTON W/MECHANICAL INTERLOCK

ELECTRIC SPACE HEATER ELEMENT

ETM — ELAPSED TIME METER

2 AUXILIARY SYSTEM

DC — DOOR CONTACT

GD — GLASS–BREAK DETECTOR

MS — MOTION SENSOR

CR — CARD READER

IACP — INTRUSION ALARM CONTROL PANEL

ACP — ALARM CONTROL PANEL

FOPP — FIBER OPTIC PATCH PANEL

CCTV — CAMERA

R — ALARM BEACON LETTER INDICATES COLOR

X — SPEAKER\HORN
H = HORN
PS = PAGING SPEAKER

C — CEILING MOUNTED SPEAKER

X1234 — EXISTING EXTENSION NUMBER

COMMUNICATION/TELEPHONE
D = DESK HANDSET AND SYSTEM OUTLET JACK
W = WALL HANDSET AND SYSTEM OUTLET JACK
EX = EXPLOSION PROOF
WP = WEATHERPROOF
(K) = KEYSET
(I) = INTERCOM

DATA OUTLET

FLOOR MOUNTED DATA OUTLET

SOUND POWERED TELEPHONE

TB — FLAT CABLE TRANSITION BOX

TELEPHONE PUNCH DOWN BLOCK

PBX — PRIVATE BRANCH EXCHANGE

EPN — EXTERNAL PORT NODE

F/C — FIBER CONVERTER

LE — LINE EXTENDER

PCC — PAGING CONTROL CABINET

MUX — MULTIPLEXOR

XCR — TRANSCEIVER

MONITOR

T — T1 DEMARCATION

UPS — UNINTERRUPTIBLE POWER SUPPLY

3 TYPICAL DEVICE MOUNTING HEIGHTS

RECEPTACLES (INTERIOR PROCESS AREAS)	16" AFF
RECEPTACLES (EXTERIOR PROCESS AREAS)	48" AFF
LIGHT SWITCHES	48" AFF
PHONE OUTLETS	16" AFF
PHONE OUTLETS (WALL MOUNT)	64" AFF
DATA OUTLETS	16" AFF
EXIT LIGHTS (WALL MOUNT)	16" ABOVE DOOR
EMERGENCY LIGHTS (WALL MOUNT)	96" AFF

NOTES:
DIMENSIONS ARE TO DEVICE BOTTOM UNLESS NOTED OTHERWISE. IN CONCRETE BLOCK OR BRICK WALL CONSTRUCTION, CONTRACTOR SHALL COORDINATE DEVICE BOX INSTALLATION WITH MORTAR AND CONSTRUCTION JOINTS.

REV NO	DESCRIPTION	DATE
0	ISSUED FOR BID	MAR 2021

REVISIONS

AUBREY ARMAND HAUDRICOURT SEAL — LICENSE — No 66861 — STATE OF FLORIDA — PROFESSIONAL ENGINEER — 3-17-21 — AUBREY A. HAUDRICOURT, P.E. No. 66861

McKIM&CREED
1365 Hamlet Avenue
Clearwater, Florida 33756
Phone: (727) 442-7196, Fax: (727) 461-3827
CA Lic. No. 29588
www.mckimcreed.com

Manatee County FLORIDA

LIFT STATION 12A ELECTRICAL PUMP & VFD REHABILITATION

ELECTRICAL

SYMBOLS

PROJ. START DATE:	2020. JUN
MCE PROJ. #	01024-0181
DRAWN	JG
DESIGNED	SS
CHECKED	MAC
PROJ. MGR.	AAH

SCALE — HORIZONTAL: N/A — VERTICAL: TBD

DRAWING NUMBER: E0.01

REVISION: 0

STATUS: ISSUED FOR BID

\\MCKIMCREED.COM\NASUNI\DATA\PROJ\01024\0181\WATER\80–DRAWINGS\ELECTRICAL\SYMBOLS.DWG 03/17/2021 11:42:24 SUVATH SENG

1 POWER SYMBOLS

52 / 1200 — MEDIUM VOLTAGE DRAWOUT POWER CIRCUIT BREAKER NUMBER INDICATES CURRENT RATING

DISCONNECT SWITCH WITH FUSING WHERE NOTED

100 / 30 — (FRAME SIZE) / (TRIP SIZE)
3 POLE THERMAL–MAGNETIC MOLDED CASE CIRCUIT BREAKER

100 / 30 2P
2 POLE THERMAL–MAGNETIC CIRCUIT BREAKER

SST 800 / 800 EO (600P) — (FRAME SIZE) / (SENSOR RATING)
DRAWOUT POWER CIRCUIT BREAKER WITH RMS TYPE SOLID STATE TRIP PROGRAMMER
EO DENOTES ELECTRICALLY OPERATED
DENOTES PLUG RATING WHEN LESS THAN SENSOR RATING IS REQUIRED

SST 800 / 600 (400P)
FIXED MOUNTED POWER OR MOLDED CASE CIRCUIT BREAKER WITH RMS TYPE SOLID STATE TRIP PROGRAMMER.

7A / MCP — (CONTINUOUS AMP RATING) / (MOTOR CIRCUIT PROTECTOR)
AC COMBINATION FULL VOLTAGE NON–REVERSING STARTER
MAGNETIC BREAKER
MAGNETIC MOTOR STARTER
OVERLOAD RELAY

7A / MCP — F S
AC COMBINATION FULL VOLTAGE NON–REVERSING TWO SPEED TWO WINDING STARTER

7A / MCP — F R
AC COMBINATION FULL VOLTAGE REVERSING STARTER

7A / MCP — 1S R — 2S
AC COMBINATION REDUCED VOLTAGE NON–REVERSING STARTER
AUTO–TRANSFORMER TYPE STARTER

RVSS–B
ELECTRONIC REDUCED VOLTAGE SOLID STATE STARTER –RVSS –B DENOTES WITH FULL SPEED BYPASS

600/5 / 3 — CURRENT TRANSFORMER, RATIO AND QUANTITY DENOTED

POTENTIAL TRANSFORMER

TRANSFORMER– SIZE AS NOTED ON THE THE DRAWINGS

SHIELDED ISOLATION TRANSFORMER

DELTA/WYE TRANSFORMER CONNECTION W/GROUND

LA — LIGHTNING ARRESTOR

CL / 2 — FUSE– VOLTAGE AS REQUIRED AND SIZE NOTED ON THE DRAWINGS.
CL DENOTES CURRENT LIMITING TYPE. NUMBER INDICATES QUANTITY WHEN LESS THAN 3.

PFD — PFD DENOTES PULL FUSE DISCONNECT TYPE

MMD — MICROPROCESSOR BASED METERING DEVICE

A AS — AMMETER – AMMETER SWITCH

V VS — VOLTMETER – VOLTMETER SWITCH

VFD–B — VARIABLE FREQUENCY DRIVE – VFD –B WHEN INDICATED DENOTES WITH STARTING AND FULL SPEED BYPASS

SUBMERSIBLE CABLES BY VENDOR

ST — SHUNT TRIP

OD — OVERLOAD DEVICE

OT — OVER–TEMPERATURE DEVICE

PUSH–BUTTON STATION

PUSH–BUTTON STATION WITH LOCK–OUT FEATURE

SELECTOR SWITCH

INDICATING LIGHT

CS — CONTROL STATION

LOR — LOCAL–OFF–REMOTE SELECTOR SWITCH CONTROL STATION

VCS — CONTROL STATION FURNISHED BY EQUIPMENT VENDOR

ATS–BI / SSC — AUTOMATIC TRANSFER SWITCH –ATS, WITH SOLID STATE CONTROLS AND ACCESSORIES. –BI WHEN INDICATED DENOTES WITH BYPASS–ISOLATION SWITCH

F / 60/40 — DISCONNECT SWITCH – 480V 3POLE UNFUSED OR FUSED
F DENOTES FUSING, ONLY WHERE INDICATED
FIRST NUMBER DENOTES SWITCH AMP RATING
SECOND NUMBER DENOTES FUSE SIZE WHEN PROVIDED.

J OR (J) — JUNCTION BOX; SIZE AS REQUIRED BY N.E.C.

T OR (T) — TERMINAL BOX; SIZE AS REQUIRED BY N.E.C. AND TO ACCOMMODATE ALL TERMINATIONS ON TERMINAL BLOCKS. TERMINATIONS TO INCLUDE SPARE WIRING.

PB OR (PB) — PULL BOX; SIZE AS REQUIRED BY N.E.C.

K1 — LOCK FOR RESPECTIVE KEY INTERLOCK WITH KEY CAPTIVE IN LOCK

L1 — LOCK FOR RESPECTIVE KEY INTERLOCK

M / RV — MOTOR STARTER/CONTROLLER (NON–COMBINATION – COMBINATION – MANUAL)
RV DENOTES REDUCED VOLTAGE

LOCAL CONTROL PANEL WITH CONTROLLERS FURNISHED BY EQUIPMENT VENDOR.

(M) (5) — ELECTRIC MOTOR (NUMBER INDICATES HORSEPOWER).

5 — ELECTRIC NON–MOTOR LOAD (NUMBER INDICATES KVA).

30 — POWER RECPT. WITH DISCONNECT–600V, 3 PHASE, 4 WIRE NUMBER DENOTES AMPERE RATING

30 — POWER RECPT. 600V, 3 PHASE, 4 WIRE

S S — POWER ON–OFF SNAP SWITCH, 1PH, 120V AC, 20A
S2–DENOTES, 2 POLE, 240 VOLTS, 20A

MS — 20A TWO OR THREE POLE MANUAL STARTER,

MV — MOTORIZED VALVE WITH CONTROLLER BY VENDOR

MOV OR (MV) — MOTORIZED VALVE

SV OR (SV) — SOLENOID VALVE

SPD — SURGE SUPPRESSION DEVICE

ANSI DEVICE DESIGNATIONS

27 — UNDER VOLTAGE RELAY
32 — DIRECTIONAL POWER RELAY
40 — FIELD(OVER\UNDER EXCITATION)RELAY
46 — REV. PHASE OR PHASE–BAL. CURRENT RELAY
50 — INSTANTANEOUS OVERCURRENT
50G– GROUND INSTANTANEOUS OVERCURRENT
51 — AC INVERSE TIME OVERCURRENT RELAY
51G– GROUND AC INVERSE TIME OVERCURRENT RELAY
59 — OVERVOLTAGE RELAY
81 — FREQUENCY RELAY
86 — LOCKOUT RELAY
87 — DIFFERENTIAL PROTECTIVE RELAY

(27)

(ZI) — ZONE INTERLOCK

(ZI) — METER FUNCTIONS

LP–3 — CONDUIT HOMERUN TO EQUIPMENT SHOWN. LINE TYPE DESIGNATES CONCEALED, EXPOSED, ETC. NUMBERS/TEXT DESIGNATE HOMERUN EQUIPMENT (I.E. PANEL BOARD CIRCUIT NUMBER).

GENERAL CONDUIT RUN CONCEALED IN FURRED WALLS AND CEILINGS, EXPOSED ELSEWHERE UNLESS OTHERWISE NOTED OR SPECIFIED.

CONCEALED CONDUIT IN FLOOR SLAB, UNDERGROUND, ETC.

EXISTING CABLE OR CONDUIT

CONDUIT TURNED DOWN

CONDUIT TURNED UP

PS 123 — INSTRUMENT DEVICE: LETTERS IDENTIFY DEVICE FUNCTION, NUMBERS WHERE INDICATED DENOTE LOOP NUMBER

PC — PRESSURE CONTROLLER

PS — PRESSURE SWITCH (PSH DENOTES PRESSURE SWITCH HIGH AND PSL DENOTES PRESSURE LOW)

dPSH — DIFFERENTIAL PRESSURE SWITCH (dPSH DENOTES PRESSURE SWITCH HIGH AND dPSL DENOTES PRESSURE SWITCH LOW)

CSH — DIAPHRAGM LEAK DETECTOR

FS — FLOW SWITCH (FSH DENOTES FLOW SWITCH HIGH AND FSL DENOTES FLOW SWITCH LOW)

ZS — LIMIT SWITCH

ZSO — LIMIT SWITCH OPEN

ZSC — LIMIT SWITCH CLOSED

PIT — PRESSURE TRANSMITTER (I DENOTES INDICATING TYPE AND PE DENOTES PRESSURE ELEMENT)

LIT — LEVEL TRANSMITTER (LE DENOTES LEVEL ELEMENT)

FIT — FLOW TRANSMITTER (FE DENOTES FLOW ELEMENT)

AIT — ANALYSIS TRANSMITTER (AE DENOTES ANALYSIS ELEMENT)

TIT — TEMPERATURE TRANSMITTER (TE DENOTES TEMPERATURE ELEMENT)

TS — TEMPERATURE SWITCH (TSH DENOTES TEMPERATURE SWITCH HIGH AND TSL DENOTES TEMPERATURE SWITCH LOW)

LS — LEVEL SWITCH (LSH DENOTES LEVEL SWITCH HIGH AND LSL DENOTES LEVEL SWITCH LOW. LE DENOTES LEVEL ELEMENT)

VLV — MANUAL OPERATED VALVE WITH POSITION CONTROLS

ACV — AIR OPERATED CONTROL VALVE

VS — VIBRATION SWITCH (VE INDICATES VIBRATION ELEMENT)

MS — MOISTURE SENSOR

WS — TORQUE SWITCH

ZC — STROKE POSITIONER

ST — SPEED TRANSMITTER (1 DENOTES INDICATOR)

SL — STROBE LIGHT

SP — SHEAR PIN

H — HORN

AV — STROBE/HORN COMBINATION

MB — MOTOR BEARING DETECTOR P= PUMP BEARING

MV — MOTOR VIBRATION DETECTOR P= PUMP VIBRATION

E — SITE ELECTRICAL
E — EXISTING SITE ELECTRICAL
T — SITE TELEPHONE
T — EXISTING SITE TELEPHONE
OHE — OVERHEAD ELECTRICAL UTILITY
OHT — OVERHEAD TELEPHONE UTILITY
UGE — UNDERGROUND ELECTRICAL UTILITY
UGT — UNDERGROUND TELEPHONE UTILITY
G — SITE GROUND
G — EXISTING SITE GROUND

REV.NO	DESCRIPTION	DATE
0	ISSUED FOR BID	MAR 2021

REVISIONS

SEAL
AUBREY ARMAND HAUDRICOURT LICENSE No 66861 STATE OF FLORIDA PROFESSIONAL ENGINEER
AUBREY A. HAUDRICOURT, P.E. No. 66861

McKIM&CREED
1365 Hamlet Avenue
Clearwater, Florida 33756
Phone: (727) 442-7196, Fax: (727) 461-3827
CA Lic. No. 29588
www.mckimcreed.com

Manatee County FLORIDA

LIFT STATION 12A ELECTRICAL PUMP & VFD REHABILITATION

ELECTRICAL

SYMBOLS

PROJ. START DATE:	2020. JUN
MCE PROJ. #	01024-0181
DRAWN	JG
DESIGNED	SS
CHECKED	MAC
PROJ. MGR.	AAH

SCALE
HORIZONTAL: N/A
VERTICAL: TBD

E0.02 — DRAWING NUMBER
0 — REVISION

STATUS: **ISSUED FOR BID**

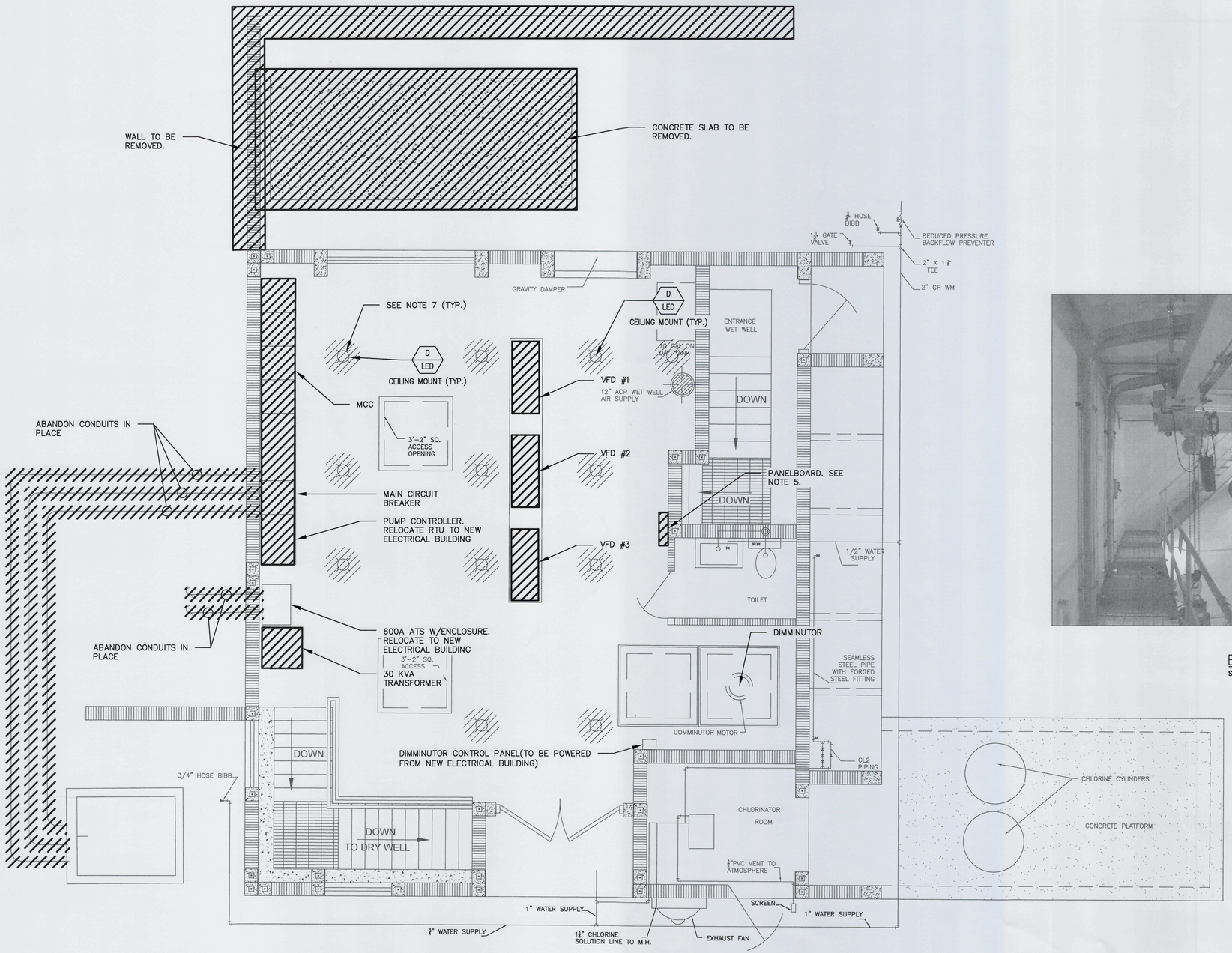

DEMOLITION PLAN

SCALE: 3/8"=1'-0"

NOTES:

1. PROVIDE TEMPORARY POWER FOR CONSTRUCTION. REFER TO BYPASS PUMP SPECIFICATIONS.
2. EXISTING ATS SHALL BE RELOCATED TO NEW ELECTRICAL BUILDING.
3. REMOVE ALL EXPOSED CONDUIT AND WIRE NOT USED PER EQUIPMENT DEMOLITION.
4. REMOVE ALL WIRING IN UNDERGROUND CONDUIT THAT IS TO BE ABANDONED. CAP ALL ABANDONED CONDUIT.
5. INTERCEPT EXISTING CONDUIT BY INSTALLING NEMA 4X SS 42 CKT PANELBOARD. REPULL ALL NEW WIRE.
6. REMOVE EQUIPMENT PADS UNDERNEATH EQUIPMENT BEING DEMOLISHED. INSTALL NEW PADS UNDER NEW EQUIPMENT, SUCH AS NEW VFD JUNCTION BOXES. REFER TO STRUCTURAL DRAWINGS.
7. REPLACE EXISTING FLUORESCENT BULBS WITH LED. IN THE EVENT THE GUARD AND GLOBE CAN NOT BE REMOVED, WITHOUT DAMAGE, A NEW REPLACEMENT LED FIXTURE SHALL BE INSTALLED.

▨ – EQUIPMENT TO BE DEMOLISHED OR RELOCATED.

NORTH

0 2 4

SCALE: 3/8" = 1'-0"

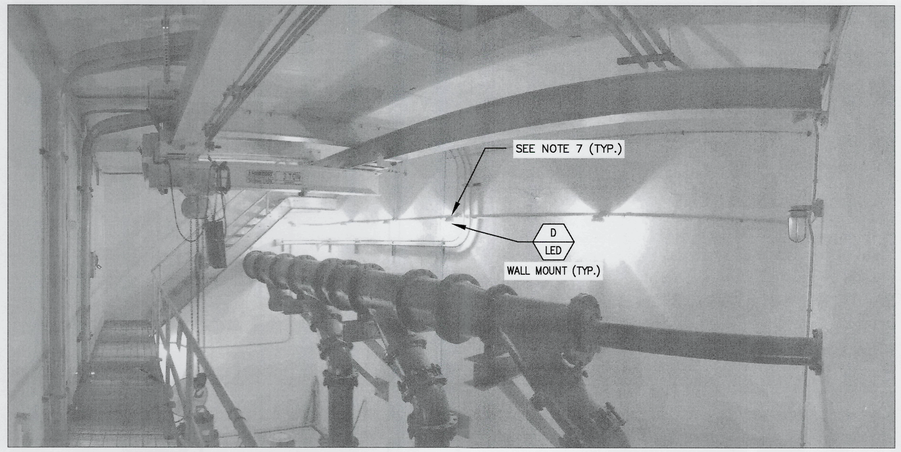

EXISTING BUILDING DRY WELL LIGHTING

SCALE: NTS

REV.NO.	DESCRIPTION	DATE
0	ISSUED FOR BID	MAR 2021

REVISIONS

SEAL

ARMAND A. HAUBRICOURT LICENSE No 66861 STATE OF FLORIDA PROFESSIONAL ENGINEER

3-17-21

AUBREY A. HAUBRICOURT, P.E. No. 66861

McKIM&CREED
1365 Hamlet Avenue
Clearwater, Florida 33756
Phone: (727) 442-7196, Fax: (727) 461-3827
CA Lic. No. 29588
www.mckimcreed.com

Manatee County FLORIDA

LIFT STATION 12A ELECTRICAL PUMP & VFD REHABILITATION

ELECTRICAL

DEMOLITION PLAN

PROJ. START DATE:	2020. JUN
MCE PROJ. #	01024-0181
DRAWN	JC
DESIGNED	SS
CHECKED	MAC
PROJ. MGR.	AAH

SCALE
HORIZONTAL: 3/8"=1'-0"
VERTICAL: TBD

E1.00
DRAWING NUMBER
0
REVISION

STATUS:
ISSUED FOR BID

\\MCKIMCREED.COM\NASUNI\DATA\PROJ\01024\0181\WATER\80-DRAWINGS\ELECTRICAL\DEMOLITION PLAN .DWG 03/17/2021 11:42:45 SUVATH SENG

FAULT CALCULATIONS AT XFMR SECONDARY	
XFMR RATING (KVA):	300.00
SECONDARY VOLTS:	480.00
Z%:	2.84
FLA:	360.83
Z-TOLERANCE:	0.90
MULTIPLIER:	39.12
ISC:	15560.46
ISC/FLA:	43.12

LOAD TABLE — 480V — **300** KVA — XFR — 162%; **832** KW — GEN — 47%; MOTOR CONTROL CENTER — 3 Ph — **600** AT — MCB — 97%; LS 12A — 3 WIRE — **800** AF — BUSS — 73%

NAME	CONT?	#DUTY	#CON	KVA	HP	FLA
PUMP #1-3	Y	2	3		150.0	360.0
WET WELL BLOWER	Y	1	1		0.5	1.1
WETWELL EX. FAN	Y	1	1		0.5	1.1
DRYWELL EX. FAN	Y	1	1		0.5	1.1
PANEL PP-1	Y	1	1	117.3		140.8
SUM		DUTY: 0.814		117.3	451.5	504.1
TOTAL CONNECTED LOAD (A)						684.1
TOTAL RUNNING LOAD				485.2		584.3

DUTY: 0.854092 NEC 230.42 SE: 630.1 A

NOTES:

1. INTERCEPT EXISTING CONDUITS AND PULL NEW WIRES.
2. INTERCEPT CONDUIT FOR GENERATOR BATTERY CHARGER AND BLOCK HEATER AND ROUTE TO PP-1, PULL NEW WIRE.

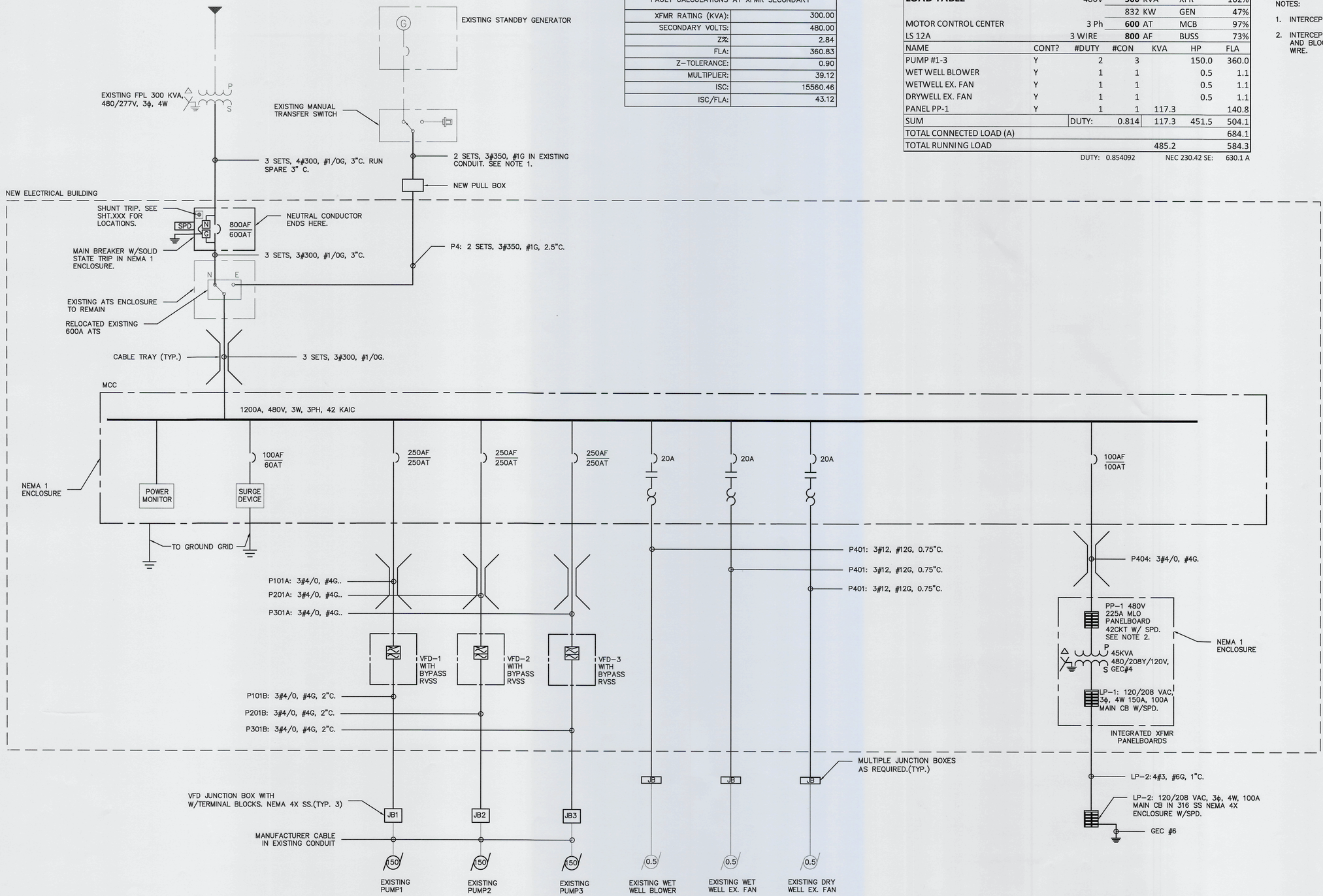

REV.NO	DESCRIPTION	DATE
0	ISSUED FOR BID	MAR 2021

REVISIONS

SEAL — AUBREY ARMAND HAUBRICOURT LICENSE No 66861 STATE OF FLORIDA PROFESSIONAL ENGINEER — 3-17-21

AUBREY A. HAUBRICOURT, P.E. No. 66861

McKIM&CREED
1365 Hamlet Avenue
Clearwater, Florida 33756
Phone: (727) 442-7196, Fax: (727) 461-3827
CA Lic. No. 29588
www.mckimcreed.com

Manatee County FLORIDA

LIFT STATION 12A ELECTRICAL PUMP & VFD REHABILITATION

ELECTRICAL

SINGLE LINE DIAGRAM

PROJ. START DATE:	2020. JUN
MCE PROJ. #	01024-0181
DRAWN	JG
DESIGNED	SS
CHECKED	MAC
PROJ. MGR.	AAH

SCALE — HORIZONTAL: N/A — VERTICAL: TBD

E1.01 — DRAWING NUMBER

0 — REVISION

STATUS: ISSUED FOR BID

\\MCKIMCREED.COM\NASUNI\DATA\PROJ\01024\0181\WATER\80-DRAWINGS\ELECTRICAL\SINGLE LINE DIAGRAM.DWG 03/17/2021 11:42:55 SUVATH SENG

NOTES:

1. VERIFY LOCATION AND INTERCEPT MANUAL TRANSFER SWITCH CONDUIT. RE-PULL NEW WIRE TO EXISTING MANUAL TRANSFER SWITCH.

NORTH

30 0 30 60

SCALE: 1" = 60'

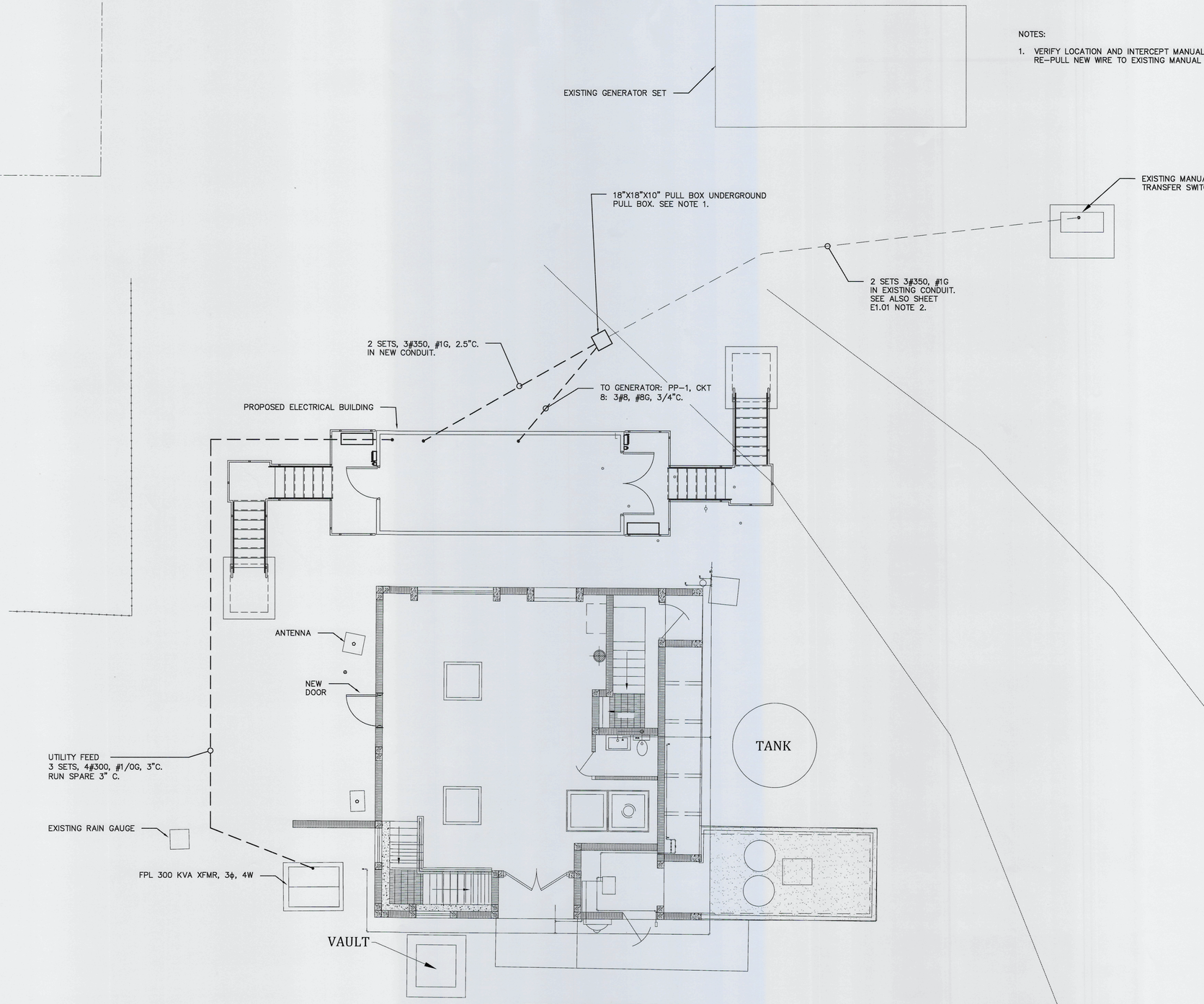

ELECTRICAL SITE PLAN

SCALE: 1"=60'-0"

REV.NO.	DESCRIPTION	DATE
0	ISSUED FOR BID	MAR 2021

REVISIONS

AUDREY ARMAND HAUBRICOURT LICENSE No 66861 STATE OF FLORIDA PROFESSIONAL ENGINEER SEAL

3-17-21

AUBREY A. HAUBRICOURT, P.E.
No. 66861

McKIM&CREED
1365 Hamlet Avenue
Clearwater, Florida 33756
Phone: (727) 442-7196, Fax: (727) 461-3827

CA Lic. No. 29588
www.mckimcreed.com

Manatee County FLORIDA

LIFT STATION 12A ELECTRICAL PUMP & VFD REHABILITATION

ELECTRICAL

ELECTRICAL SITE PLAN

PROJ. START DATE:	2020. JUN
MCE PROJ. #	01024-0181
DRAWN	JG
DESIGNED	SS
CHECKED	MAC
PROJ. MGR.	AAH

SCALE
HORIZONTAL: 1"=60'-0"
VERTICAL: TBD

E1.02
DRAWING NUMBER

0
REVISION

STATUS: **ISSUED FOR BID**

NEW GENERATOR FEED

TO GENERATOR: PP-1, CKT 8: 3#8, #8G, 3/4"C.

MCC FUTURE

VFD #4 FUTURE

MAIN BREAKER

RELOCATED EXISTING 600A ATS

MCC SEC. 2

MCC SEC. 1

INTEGRATED XFMR PANELBOARDS

RTU PANEL

VFD #3

VFD #2

VFD #1

C109

C109

EE

EE

CONDUIT ENTRY FROM UNDERNEATH BUILDING.

3#12, #12G, 0.75"C.TO EXISTING WET WELL BLOWER
3#12, #12G, 0.75"C.TO EXISTING WET WELL EXHAUST FAN
3#12, #12G, 0.75"C.TO EXISTING DRY WELL EXHAUST FAN
3#12, #12G, 0.75"C.TO EXISTING DIMMINUTER

LP-2: 3#1, #6G, 1"C.

BOND TO GROUND RING. SEE SHEET E1.06

JUNCTION BOX. NEMA 4X SS. SEE NOTE 2.

3 SETS, 4#300, #1/0G, 3"C. RUN SPARE 3" C. DIRECT BURIED WITH 4"CONCRETE CAP.

VFD #1 JUNCTION BOX

32"HX18L"X18W" MIN. JUNCTION BOX WITH TERMINAL BLOCKS. NEMA 4X SS. (TYP. OF 3). SEE NOTE 3.

C013

P101B

GEC #6G, 0.75"C.

TO EXISTING DISCONNECT FOR 3 TON CRANE LOCATED IN DRY WELL. EXISTING CONDUIT TO BE REUSED.

VFD #2 JUNCTION BOX

C107

LS

SUMP PUMP FLOAT SWITCH LOCATED IN DRY WELL.

C023

P201B

LP-2: 4#3, #6G, 1"C.

VFD #3 JUNCTION BOX

CONTROLS TERMINAL BOX WITH TERMINAL BLOCKS. NEMA 4X SS. SEE NOTE 4.

C108A

C108

C108

C033

P301B

LP-2: 120/208 VAC, 3ϕ, 4W, 100A MAIN CB IN 316 SS NEMA 4X ENCLOSURE W/SPD. REPULL ALL NEW WIRE.

EXISTING CONDUIT TO BE REUSED.

C106

LSH

DRY WELL FLOAT SWITCH LOCATED IN DRY WELL.

DIMMINUTOR

C104

C104

0A

0I

EXISTING DIMMINUTOR CONTROL PANEL.

EXISTING CONDUIT TO BE REUSED.

C105

0I

EXISTING RAIN GAUGE

C103

PIT

C103

FIT

EXISTING DISCONNECT 3 TON BUDGIT CRANE

C110C

LIT

LSL

LSH

EXISTING CONDUIT AND CONDUCTORS TO CONTROLS JB.

EXISTING INSTRUMENTS LOCATED IN WET WELL

FPL 300 KVA XFMR, 3ϕ, 3W

C112

NEW NEMA 4X LED STROBE FOR HIGH LEVEL ALARM

ELECTRICAL PARTIAL SITE PLAN

SCALE: 3/8"=1'-0"

NOTES:

1. BUILDING MANUFACTURER TO COORDINATE W/STRUCTURAL ON BEAM LOCATIONS FOR EQUIPMENT CUTOUTS.
2. JUNCTION BOX SHALL CAPTURE EXISTING CONDUITS TO EQUIPMENT. ADD ADDITIONAL JUNCTION BOXES AS NECESSARY.
3. JUNCTION BOX SHALL CAPTURE EXISTING CONDUIT TO DRY WELL.
4. TERMINAL BOX SHALL CAPTURE EXISTING CONDUITS. INTERCEPT SIGNAL WIRES FROM INSTRUMENTS.

NORTH

0 2 4

SCALE: 3/8" = 1'-0"

REV.NO.	DESCRIPTION	DATE
0	ISSUED FOR BID	MAR 2021

REVISIONS

AUBREY ARMAND HAUGRICOURT LICENSE NUMBER No 66861 STATE OF FLORIDA PROFESSIONAL ENGINEER SEAL

3-17-21

AUBREY A. HAUGRICOURT, P.E. No. 66861

McKIM&CREED

1365 Hamlet Avenue
Clearwater, Florida 33756
Phone: (727) 442-7196, Fax: (727) 461-3827

CA Lic. No. 29588
www.mckimcreed.com

Manatee County FLORIDA

LIFT STATION 12A ELECTRICAL PUMP & VFD REHABILITATION

ELECTRICAL

ELECTRICAL PARTIAL SITE PLAN

PROJ. START DATE:	2020. JUN
MCE PROJ. #	01024-0181
DRAWN	JG
DESIGNED	SS
CHECKED	MAC
PROJ. MGR.	AAH

SCALE
HORIZONTAL: 3/8"=1'-0"
VERTICAL: TBD

DRAWING NUMBER: E1.03

REVISION: 0

STATUS: ISSUED FOR BID

NOTES:

1. CONTRACTOR TO CORE DRILL ALL CONDUIT PENETRATIONS THROUGH CONCRETE AND SEAL AFTER INSTALLATION WITH ECOFLEX PRODUCT OR EQUAL. DUCT SEAL NOT ALLOWED. SEE SHEET E1.08 – LIGHTING PLAN FOR EQUIPMENT CUTOUT LOCATIONS.
2. CABLE TRAY REMOVED FOR CLARITY. SEE E1.05
3. EXISTING ATS TO BE MOUNTED IN 91.5"H X 30"W X 24"D, NEMA 1 ENCLOSURE BY UL CERTIFIED PANEL SHOP W/LABEL.

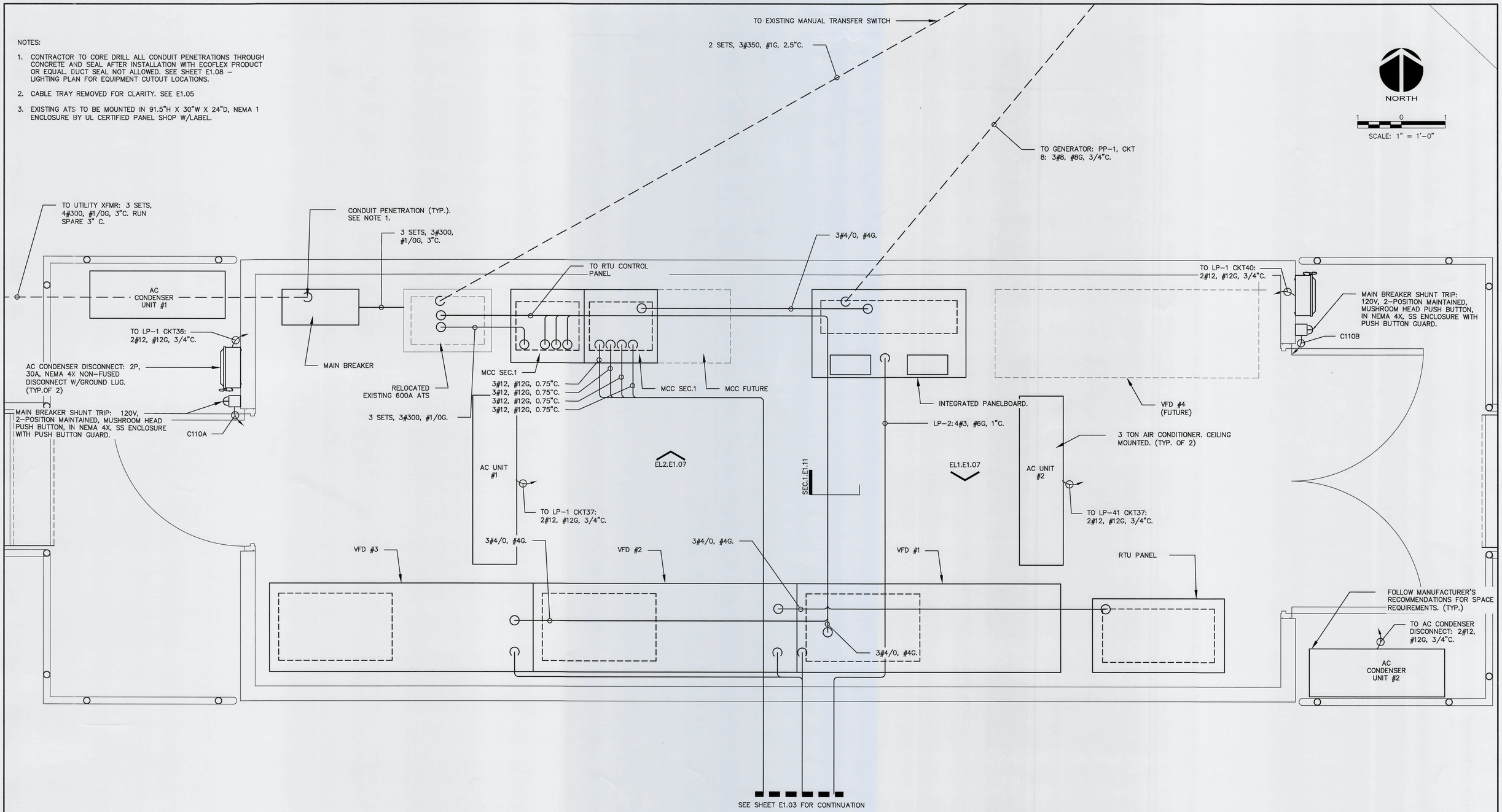

ELECTRICAL BUILDING POWER PLAN
SCALE: 1"=1'-0"

REV.NO.	DESCRIPTION	DATE
0	ISSUED FOR BID	MAR 2021

REVISIONS

AUBREY ARMAND HAUDRICOURT LICENSE No 66861 STATE OF FLORIDA PROFESSIONAL ENGINEER SEAL
3-17-21
AUBREY A. HAUDRICOURT, P.E. No. 66861

McKIM&CREED
1365 Hamlet Avenue
Clearwater, Florida 33756
Phone: (727) 442-7196, Fax: (727) 461-3827
CA Lic. No. 29588
www.mckimcreed.com

Manatee County FLORIDA

LIFT STATION 12A ELECTRICAL PUMP & VFD REHABILITATION

ELECTRICAL

ELECTRICAL BUILDING POWER PLAN

PROJ. START DATE:	2020. JUN
MCE PROJ. #	01024-0181
DRAWN	JG
DESIGNED	SS
CHECKED	MAC
PROJ. MGR.	AAH

SCALE
HORIZONTAL: 1"=1'-0"
VERTICAL: TBD

E1.04
DRAWING NUMBER
0
REVISION

STATUS: **ISSUED FOR BID**

NORTH

1 0 1

SCALE: 1" = 1'-0"

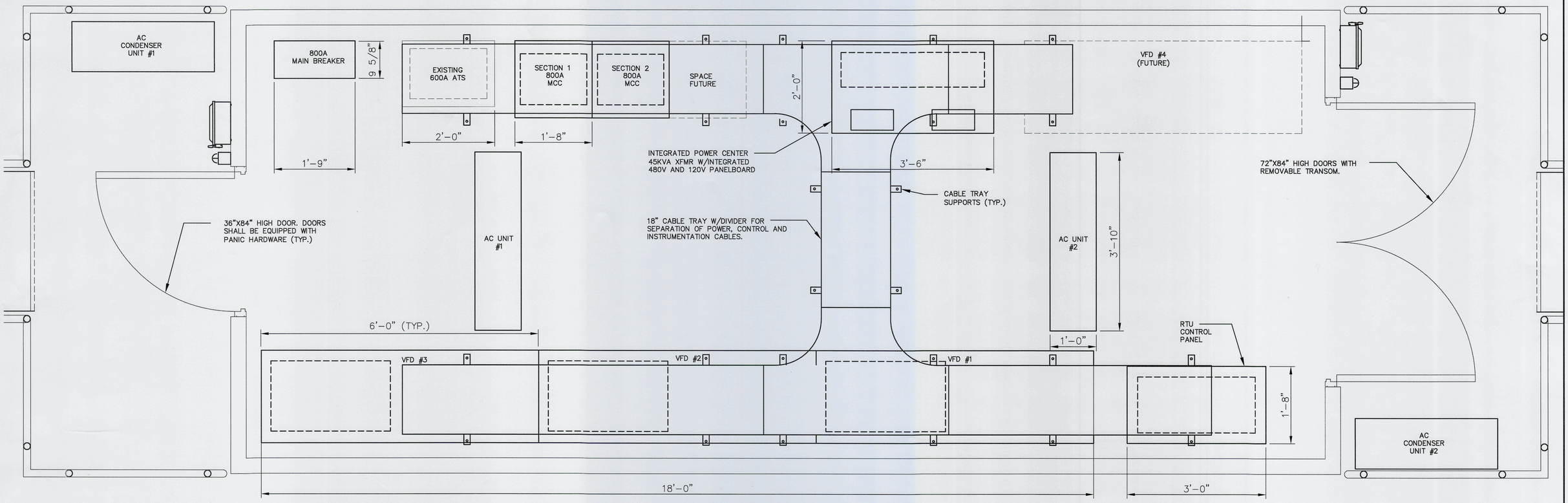

REV.NO.	DESCRIPTION	DATE
0	ISSUED FOR BID	MAR 2021

REVISIONS

PROFESSIONAL ENGINEER AUBREY ARMAND HAUDRICOURT LICENSE No 66861 STATE OF FLORIDA

3-17-21

AUBREY A. HAUDRICOURT, P.E.
No. 66861

McKIM&CREED
1365 Hamlet Avenue
Clearwater, Florida 33756
Phone: (727) 442-7196, Fax: (727) 461-3827

CA Lic. No. 29588
www.mckimcreed.com

Manatee County FLORIDA

LIFT STATION 12A ELECTRICAL PUMP & VFD REHABILITATION

ELECTRICAL

ELECTRICAL BUILDING LAYOUT

PROJ. START DATE:	2020. JUN
MCE PROJ. #	01024-0181
DRAWN	JG
DESIGNED	SS
CHECKED	MAC
PROJ. MGR.	AAH

SCALE
HORIZONTAL: 1"=1'-0"
VERTICAL: TBD

E1.05
DRAWING NUMBER
0
REVISION

STATUS: **ISSUED FOR BID**

\\MCKIMCREED.COM\NASUNI\DATA\PROJ\01024\0181\WATER\80-DRAWINGS\ELECTRICAL\ELEC BUILDING LAYOUT-12A.DWG 03/17/2021 11:43:46 SUVATH SENG

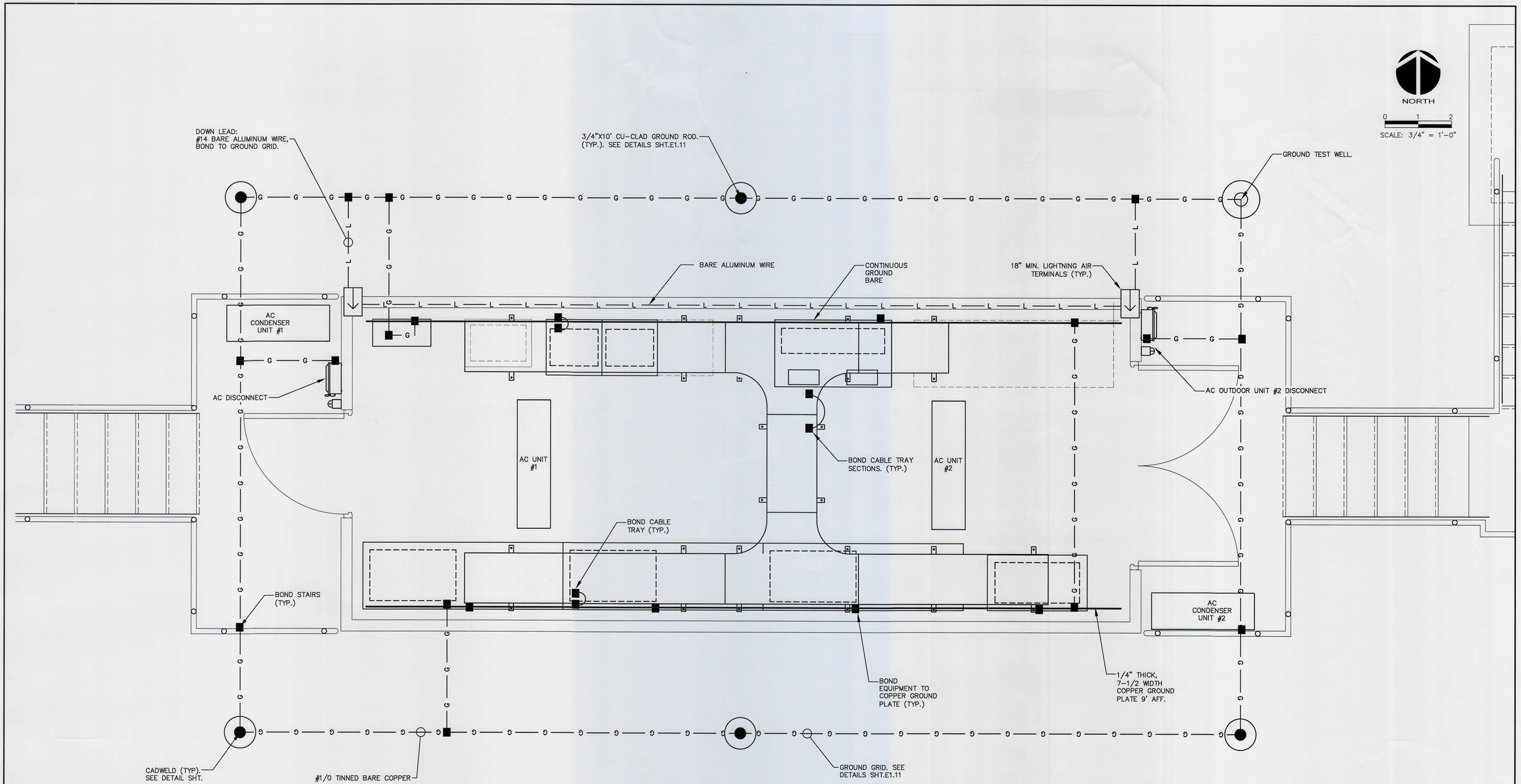

GROUNDING AND LIGHTNING PROTECTION PLAN

SCALE: 3/4"=1'-0"

REV.NO.	DESCRIPTION	DATE
0	ISSUED FOR BID	MAR 2021

REVISIONS

AUBREY ARMAND HAUBRICOURT LICENSE No 66861 STATE OF FLORIDA PROFESSIONAL ENGINEER SEAL
3-17-21
AUBREY A. HAUBRICOURT, P.E.
No. 66861

McKIM&CREED
1365 Hamlet Avenue
Clearwater, Florida 33756
Phone: (727) 442-7196, Fax: (727) 461-3827
CA Lic. No. 29588
www.mckimcreed.com

Manatee County FLORIDA

LIFT STATION 12A ELECTRICAL PUMP & VFD REHABILITATION

ELECTRICAL

GROUNDING AND LIGHTNING PROTECTION PLAN

PROJ. START DATE:	2020. JUN
MCE PROJ. #	01024-0181
DRAWN	JG
DESIGNED	SS
CHECKED	MAC
PROJ. MGR.	AAH

SCALE
HORIZONTAL: 3/4"=1'-0"
VERTICAL: TBD

E1.06 DRAWING NUMBER
0 REVISION

STATUS: **ISSUED FOR BID**

\\MCKIMCREED.COM\NASUNI\DATA\PROJ\01024\0181\WATER\80-DRAWINGS\ELECTRICAL\GROUNDING AND LIGHTNING.DWG 03/17/2021 11:44:02 SUVATH SENG

NOTES:

1. ATS TO BE MOUNTED IN THE FIELD BY UL CERTIFIED PANEL SHOP. ALL WIRING PERFORMED IN FIELD BY CONTRACTOR.

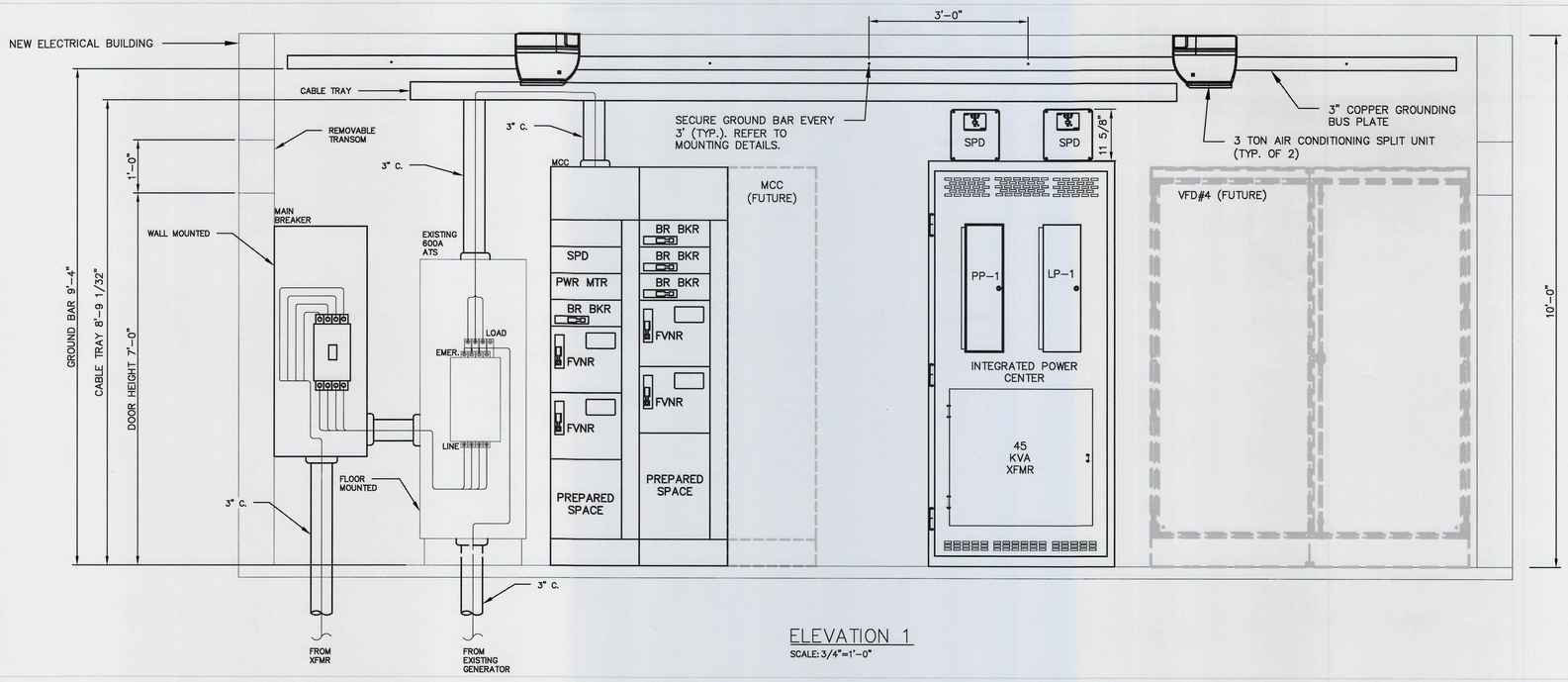

ELEVATION 1

SCALE: 3/4"=1'-0"

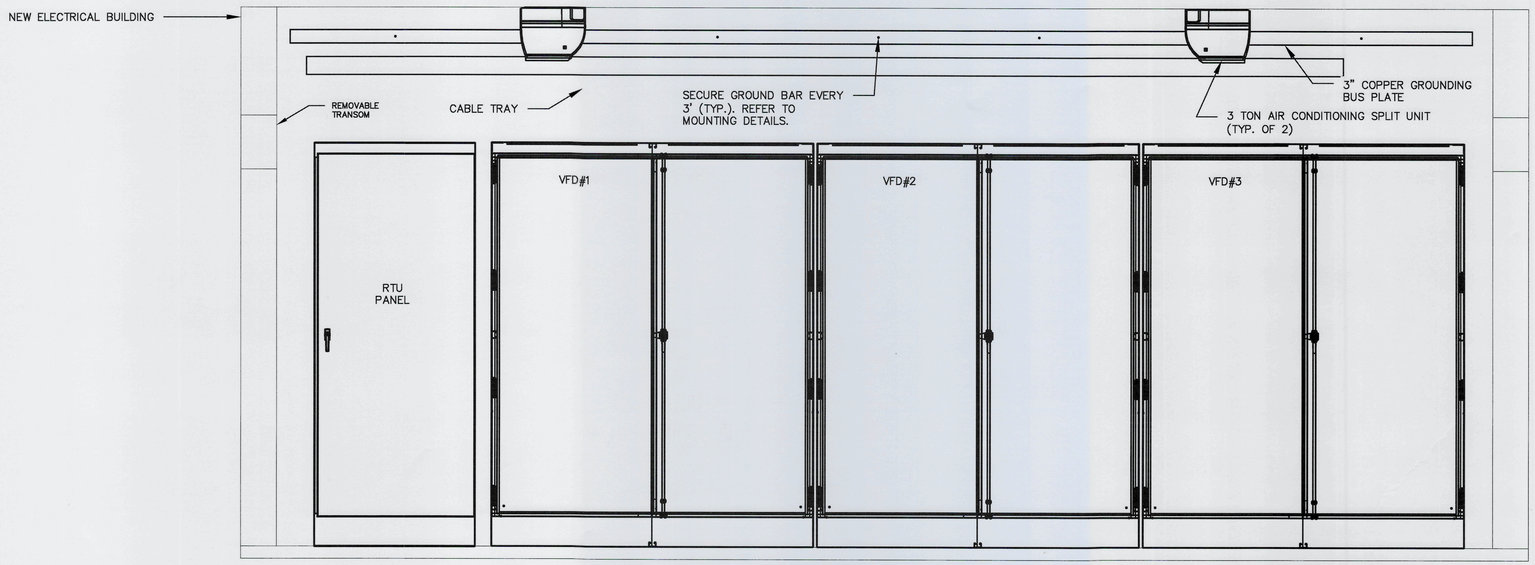

ELEVATION 2

SCALE: 3/4"=1'-0"

REV.NO	DESCRIPTION	DATE
0	ISSUED FOR BID	MAR 2021

REVISIONS

AUBREY A. HAUDRICOURT, P.E. No. 66861

3-17-21

McKIM&CREED
1365 Hamlet Avenue
Clearwater, Florida 33756
Phone: (727) 442-7196, Fax: (727) 461-3827

CA Lic. No. 29588
www.mckimcreed.com

Manatee County FLORIDA

LIFT STATION 12A ELECTRICAL PUMP & VFD REHABILITATION

ELECTRICAL

MCB, ATS AND MCC ELEVATIONS

PROJ. START DATE:	2020. JUN
MCE PROJ. #	01024-0181
DRAWN	JG
DESIGNED	SS
CHECKED	MAC
PROJ. MGR.	AAH

SCALE
HORIZONTAL: N/A
VERTICAL: TBD

DRAWING NUMBER: E1.07

REVISION: 0

STATUS: ISSUED FOR BID

\\MCKIMCREED.COM\NASUNI\DATA\PROJ\01024\0181\WATER\80-DRAWINGS\ELECTRICAL\MCB AND ATS ELEVATIONS.DWG 03/17/2021 11:44:12 SUVATH SENG

NORTH

1 0 1

SCALE: 1" = 1'-0"

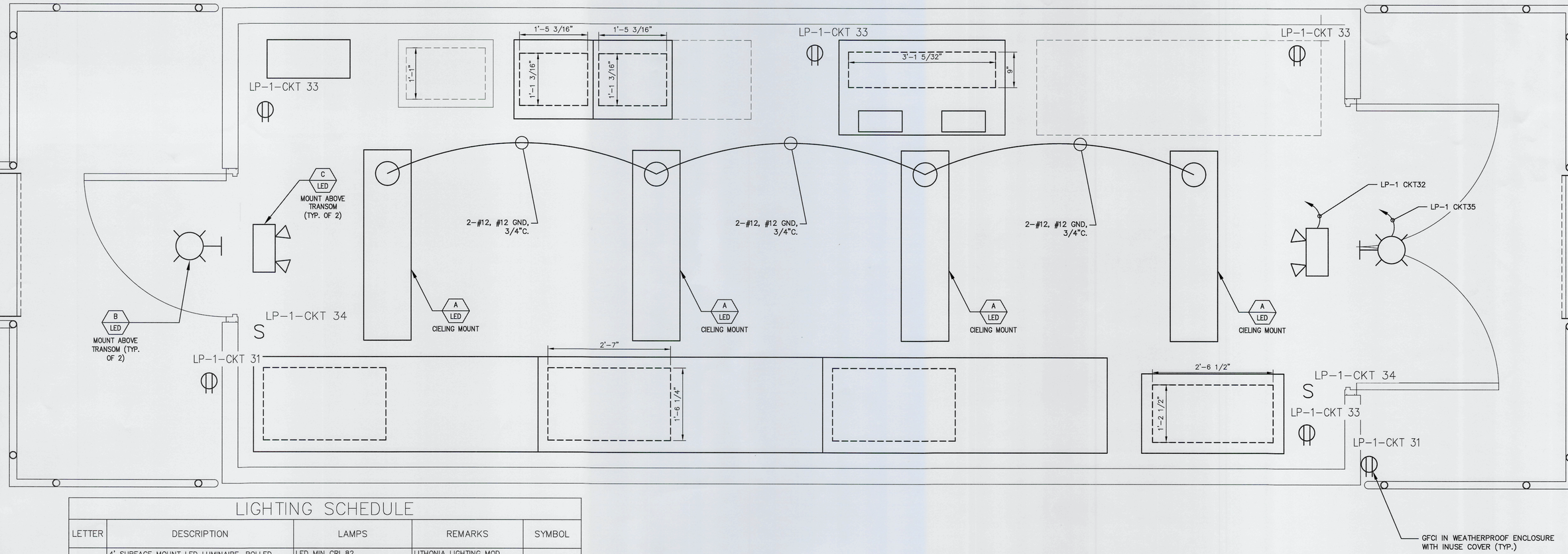

LIGHTING SCHEDULE

LETTER	DESCRIPTION	LAMPS	REMARKS	SYMBOL
A	4' SURFACE MOUNT LED LUMINAIRE. ROLLED STEEL HOUSING. IMPACT MODIFIED LINEAR FACETED REFRACTOR. INTEGRAL OCCUPANCY SENSOR.	LED MIN CRI 82, L90/60,000HRS, 39W, 4000K	LITHONIA LIGHTING MOD. WL4-40L-LP840-NES7-SC OR APPROVED EQUAL.	
B	LED OUTDOOR RATED WALL PACK. TYPE II/WIDE DISTRIBUTION. INTEGRAL BALLAST & PHOTOCELL. FULL CUTOFF. DARK BRONZE.	20 LED 73W 4000K	LITHONIA LIGHTING DSXW2 LED, LSI INDUSTRIES XGBWM3, OR APPROVED ALTERNATE	
C	WALL MOUNT EMERGENCY EXIT LIGHT W/SIGN. INJECTION-MOLDED, FLAME-RETARDANT, HIGH-IMPACT, THERMOPLASTIC HOUSING. BATTERY BACKUP. TEST SWITCH FOR MANUAL ACTIVATION OF 30-SECOND DIAGNOSTIC TESTING. SELF DIAGNOSTIC TESTING EVERY 30 DAYS.	LED, RED LENS <1W, 120V	LITHONIA LIGHTING MOD. LHQM OR APPROVED EQUAL	
D	LED, CLASS 1, DIV 2 RATED, EXPLOSION PROOF FIXTURE WITH DOME REFLECTOR AND GLOBE GUARD.	LED, 40W, 120V.	KILLARK MODEL NO. EMLC-50-30 OR APPROVED EQUAL. WALL MOUNT AND CEILING MOUNT AS NECESSARY.	

LIGHTING PLAN

SCALE: 1"=1'-0"

REV.NO.	DESCRIPTION	DATE
0	ISSUED FOR BID	MAR 2021

REVISIONS

AUBREY ARMAND HAUDRICOURT LICENSE PROFESSIONAL ENGINEER No 66861 STATE OF FLORIDA SEAL

3-17-21

AUBREY A. HAUDRICOURT, P.E. No. 66861

McKIM&CREED
1365 Hamlet Avenue
Clearwater, Florida 33756
Phone: (727) 442-7196, Fax: (727) 461-3827
CA Lic. No. 29588
www.mckimcreed.com

Manatee County FLORIDA

LIFT STATION 12A ELECTRICAL PUMP & VFD REHABILITATION

ELECTRICAL

LIGHTING PLAN

PROJ. START DATE:	2020. JUN
MCE PROJ. #	01024-0181
DRAWN	JG
DESIGNED	SS
CHECKED	MAC
PROJ. MGR.	AAH

SCALE: HORIZONTAL: 1"=1'-0" VERTICAL: TBD

E1.08 DRAWING NUMBER

0 REVISION

STATUS: ISSUED FOR BID

\\MCKIMCREED.COM\NASUNI\DATA\PROJ\01024\0181\WATER\80-DRAWINGS\ELECTRICAL\GROUNDING AND LIGHTNING.DWG 03/17/2021 11:44:30 SUVATH SENG

NOTES:
1. SURGE PROTECTION DEVICES REQUIRED, THOUGH GENERALLY NOT SHOWN. REFER TO I-SHEETS AND CONTRACT SPECIFICATIONS FOR REQUIREMENTS.
2. COORDINATE WITH THE PROVIDER OF THE VARIABLE FREQUENCY MOTOR CONTROLLERS TO PROVIDE THE THERMAL AND LEAK DETECTION SIGNALS TO THE DRIVE MANUFACTURER AND SUPPLY ANY ANCILLARY EQUIPMENT REQUIRED FOR THESE SIGNALS, INCLUDING ANY CONDITIONING DEVICES. SEE SPECIFICATIONS 11310, PART 1 B.1.

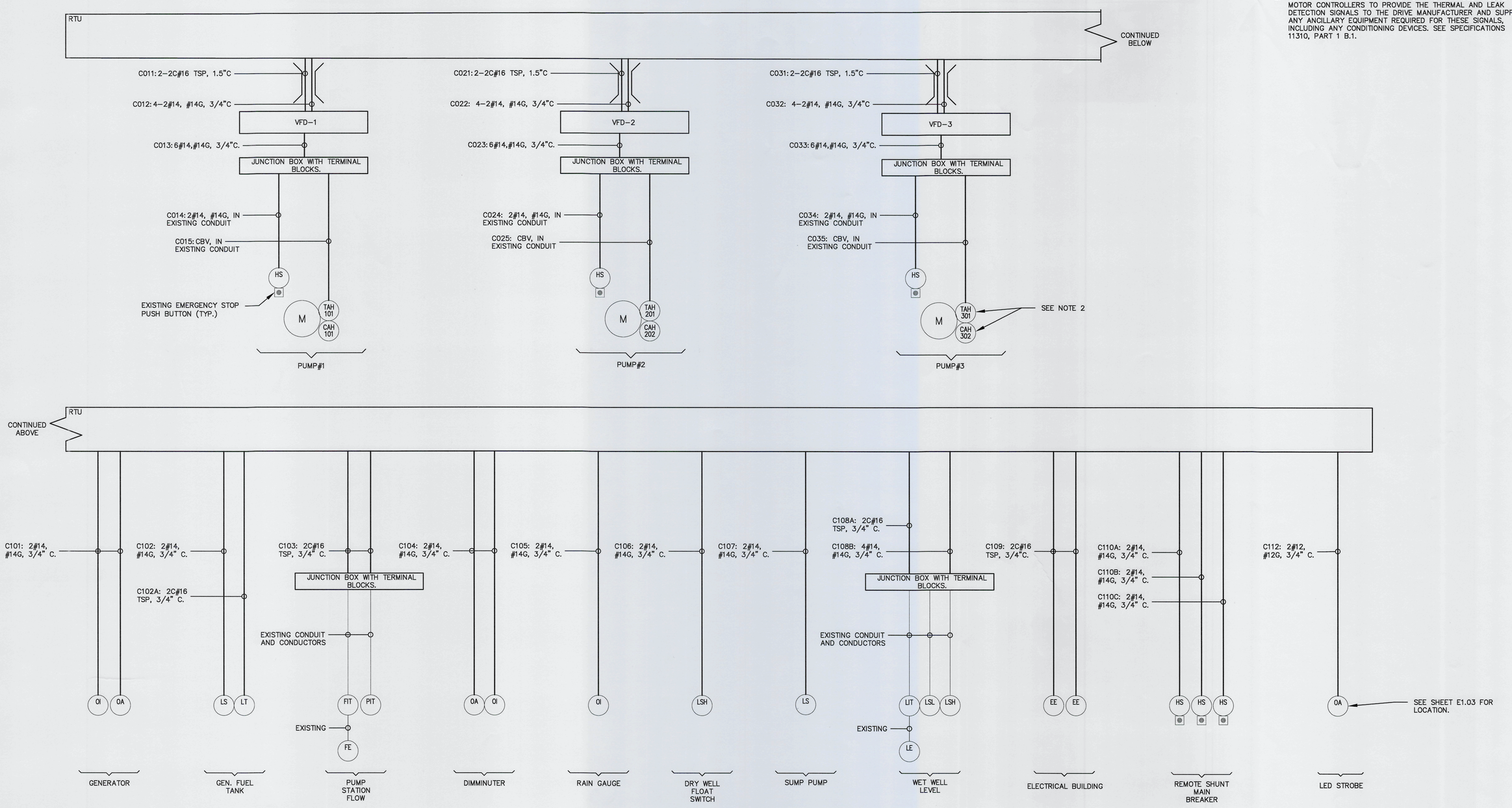

ELECTRICAL INTERCONNECTION DIAGRAM

SCALE: NTS

REV.NO.	DESCRIPTION	DATE
0	ISSUED FOR BID	MAR 2021

REVISIONS

ARNAUD HAUBRICOURT LICENSE No 66861 STATE OF FLORIDA PROFESSIONAL ENGINEER SEAL

AUBREY A. HAUBRICOURT, P.E. No. 66861

McKIM&CREED
1365 Hamlet Avenue
Clearwater, Florida 33756
Phone: (727) 442-7195, Fax: (727) 461-3827
CA Lic. No. 29588
www.mckimcreed.com

Manatee County FLORIDA

LIFT STATION 12A ELECTRICAL PUMP & VFD REHABILITATION

ELECTRICAL

ELECTRICAL INTERCONNECTION DIAGRAM

PROJ. START DATE:	2020. JUN
MCE PROJ. #	01024-0181
DRAWN	JG
DESIGNED	SS
CHECKED	MAC
PROJ. MGR.	AAH

SCALE
HORIZONTAL: N/A
VERTICAL: TBD

DRAWING NUMBER: E1.09
REVISION: 0

STATUS: ISSUED FOR BID

CKT NO.	TRIP AMPS	DESCRIPTION OF LOAD	LOAD KVA	AMPS	POLES	KVA PER PHASE A	KVA PER PHASE B	KVA PER PHASE C	POLES	AMPS	LOAD KVA	DESCRIPTION OF LOAD	TRIP AMPS	CKT NO.
1	30	DRYWELL CRANE	5.5	22.9	2	6.8			3	4.7	1.3	ODOR CONTROL	20	2
			5.5				6.8				1.3			
5	30	OPERATION FLOOR CRANE	5.5	22.9	2			6.8			1.3			
			5.5			15.5			3	36.1	10	30KVA EXISITNG GENERATOR	50	8
9	30	BUDGIT CRANE	5.5	22.9	2		15.5				10	TRANSFORMER		
			5.5					15.5			10			
13	20	DIMMINUTER	0.4667	1.7	3	0.5			3			SPARE	20	14
			0.4667				0.5							
			0.4667					0.5						
19	20	SPARE			3	15.0			3	54.1	15	45KVA TRANSFORMER	70	20
							15.0				15			
								15.0			15			
25	30	SPARE			3	0.0			3			SURGE PROTECTION DEVICE	20	26
							0.0							
								0.0						
31	30	SPARE			3	0.0			2			SPARE	30	32
							0.0							
								0.0	2			SPARE	30	36
37		SPACE				0.0								
39							0.0		2			SPACE		40
41								0.0						

PANEL **PP-1**
LOCATION MANATEE COUNTY
BUILDING ELECTRICAL BUILDING
NOTES: INTEGRATED PANELBOARD

TOTAL KVA	37.8	37.8	37.8
GRAND CONNECTED TOTAL KVA		113.3	

SERVICE CHARACTERISTICS
VOLTS: 480
PHASE: 3
WIRE: 3
10K MIN AIC SYMM, FULLY RATED ASSEMBLY

225 A MLO
0 A MCB

PANEL SCHEDULE PP-1
SCALE: NTS

CKT NO.	TRIP AMPS	DESCRIPTION OF LOAD	LOAD KVA	AMPS	POLES	KVA PER PHASE A	KVA PER PHASE B	KVA PER PHASE C	POLES	AMPS	LOAD KVA	DESCRIPTION OF LOAD	TRIP AMPS	CKT NO.
1	20	ELEC. BUILDING RECEPTACLES OUTSIDE	0.36	3.0	1	0.5			1	1.5	0.18	ELEC. BUILDING EMERG. EXIT LIGHT	20	2
3	20	ELEC. BUILDING RECEPTACLES INSIDE	0.72	6.0	1		1.5		1	6.7	0.8	ELEC. BUILDING LIGHTING INSIDE	20	4
5	20	ELEC. BUILDING OUTSIDE WALL PACKS	0.5	4.2	1			2.1	2	15.4	1.6	ELEC. BUILDING AC OUTDOOR UNIT #1	25	6
7	15	ELEC. BUILDING AC INDOOR UNIT #1	0.1	1.0	2	1.7					1.6			
			0.1				1.7		2	15.4	1.6	ELEC. BUILDING AC OUTDOOR UNIT #2	25	10
11	15	ELEC. BUILDING AC INDOOR UNIT #2	0.1	1.0	2			1.7			1.6			
			0.1			7.5			3	61.7	7.4	PANEL LP-2	100	14
15	20	SURGE PROTECTION DEVICE			3		7.4				7.4			
								7.4			7.4			
						0.0			1			SPARE	20	20
21	20	SPARE			1		0.0		1			SPARE	20	22
23	20	SPARE			1			0.0	1			SPARE	20	24
25	20	SPARE			1	0.0			1			SPARE	20	26
27	20	SPARE			1		0.0		1			SPARE	20	28
29	20	SPARE			1			0.0	1			SPARE	20	30
31	20	SPARE			1	0.0			1			SPARE	20	32
33	20	SPARE			1		0.0		1			SPARE	20	34
35	20	SPARE			1			0.0	1			SPARE	20	36
37	20	SPARE			1	0.0			1			SPARE	20	38
39	20	SPARE			1		0.0		1			SPARE	20	40
41	20	SPARE			1			0.0	1					42

PANEL **LP-1**
LOCATION MANATEE COUNTY
BUILDING NEW ELECTRICAL BUILDING
NOTES: INTEGRATED PANELBOARD

TOTAL KVA	9.8	10.6	11.2
GRAND CONNECTED TOTAL KVA		31.6	

SERVICE CHARACTERISTICS
VOLTS: 208Y/120
PHASE: 3
WIRE: 4
10K MIN AIC SYMM, FULLY RATED ASSEMBLY

A MLO
150 A MCB

PANEL SCHEDULE LP-1
SCALE: NTS

CKT NO.	TRIP AMPS	DESCRIPTION OF LOAD	LOAD KVA	AMPS	POLES	KVA PER PHASE A	KVA PER PHASE B	KVA PER PHASE C	POLES	AMPS	LOAD KVA	DESCRIPTION OF LOAD	TRIP AMPS	CKT NO.
1	30	UNKNOWN	0.18	1.5	1	0.4			1	1.5	0.18	UNKNOWN	15	2
3	15	BATTERY CHARGER	0.06	0.5	1		1.2		1	9.2	1.1	#1 PUMP SPEED CONTROLLER	15	4
5	30	#2 PUMP SPEED CONTROLLER	1.1	9.2	1			2.2	1	9.2	1.1	#4 PUMP SPEED CONTROLLER	15	6
7	20	SUMP PUMP	0.07	0.6	1	1.6			1	12.5	1.5	WET WELL LIGHTS	20	8
9	20	OPER FLOOR LIGHTS	1.2	10.0	1		2.4		1	10.0	1.2	OPER FLOOR LIGHTS	20	10
11	20	OUTDOOR FLOODLIGHTS	1.2	10.0	1			2.2	1	8.3	1	OUTDOOR FLOODLIGHTS	20	12
13	20	CHLOR STORAGE LIGHTS			1	0.1			1	0.7	0.08	OPER FLOOR RECEPTACLES	20	14
15	20	OPER FLOOR RECEPTACLES	1	8.3	1		2.4		1	11.7	1.4	DRY WELL LIGHTS	20	16
17	20	DRY WELL LIGHTS	1.4	11.7	1			1.4	1	0.1	0.01	TOILET LIGHTS	20	18
19	20	CHLORINATOR HEATER	0.05	0.4	1	0.1			2			SPARE	20	20
21	20	SURGE PROTECTION DEVICE	0.1	0.8	3		0.1							
			0.1					0.1	3			SPARE	30	24
			0.1			0.1								
27					1		0.0							
29	20	SPARE			1			0.0	1			SPARE	20	30
31	20	SPARE			1	0.0			1			SPARE	20	32
33	20	SPARE			1		0.0		1			SPARE	20	34
35	20	SPARE			1			0.0	1			SPARE	25	36
37	20	SPARE			1	0.0			1			SPARE	20	38
39	20	SPARE			1		0.0		1			SPARE	20	40
41	20	SPARE			1			0.0	1			SPARE	20	42

PANEL **LP-2**
LOCATION MANATEE COUNTY
BUILDING OLD PUMP BUILDLING
NOTES:

TOTAL KVA	2.2	6.1	5.9
GRAND CONNECTED TOTAL KVA		14.1	

SERVICE CHARACTERISTICS
VOLTS: 208Y/120
PHASE: 3
WIRE: 4
10K MIN AIC SYMM, FULLY RATED ASSEMBLY

A MLO
100 A MCB

PANEL SCHEDULE LP-2
SCALE: NTS

REV.NO.	DESCRIPTION	DATE
0	ISSUED FOR BID	MAR 2021

REVISIONS

SEAL
AUBREY A. HAURIECOURT, P.E.
No. 66861

McKIM&CREED
1365 Hamlet Avenue
Clearwater, Florida 33756
Phone: (727) 442-7196, Fax: (727) 461-3827
CA Lic. No. 29588
www.mckimcreed.com

Manatee County FLORIDA

LIFT STATION 12A ELECTRICAL PUMP & VFD REHABILITATION

ELECTRICAL

PANEL BOARD SCHEDULES

PROJ. START DATE:	2020. JUN
MCE PROJ. #	01024-0181
DRAWN	JC
DESIGNED	SS
CHECKED	MAC
PROJ. MGR.	AAH

SCALE
HORIZONTAL: N/A
VERTICAL: TBD

E1.10
DRAWING NUMBER
0
REVISION

STATUS: ISSUED FOR BID

\\MCKIMCREED.COM\NASUNI\DATA\PROJ\01024\0181\WATER\80-DRAWINGS\ELECTRICAL\SCHEDULES AND TABLES.DWG 03/17/2021 11:44:47 SUVATH SENG

NOTES:

1. MINIMUM WIRE SIZE FOR ALL POWER CIRCUITS IS #12AWG CU UNLESS OTHERWISE NOTED.
2. MINIMUM CONDUIT SIZE IS 3/4" TRADE SIZE.
3. SWAB CLEAN EXISTING CONDUITS PRIOR TO PULLING NEW CIRCUITS.
4. FOR LOW VOLTAGE DUCTBANKS MINIMUM SEPARATION BETWEEN CONDUITS SHALL BE 2".

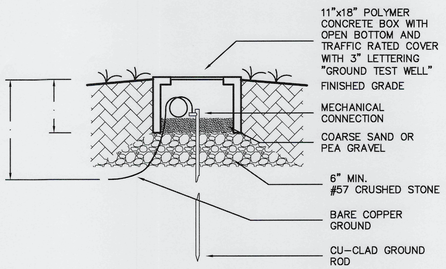

GROUND ROD TEST WELL
SCALE: NTS

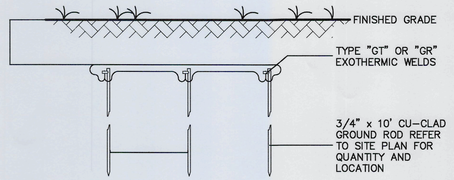

BELOW GRADE GROUND ROD/CABLE CONNECTION DETAIL
SCALE: NTS

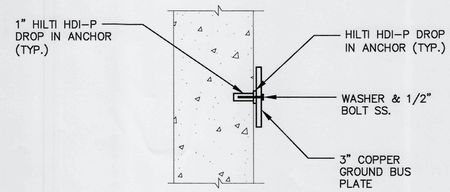

COPPER GROUND BUS PLATE MOUNTING DETAIL
SCALE: NTS

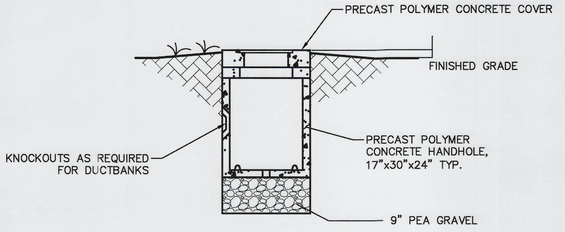

SMALL HANDHOLE NOTES:

1. PROVIDE PRODUCTS OF ONE OF THE FOLLOWING:
   A. STRONGWELL QUAZITE
   B. OLD CASTLE
   C. OR APPROVED EQUAL
2. MATERIAL: PRECAST POLYMER CONCRETE.
3. DUCT ENTRANCES SIZED AND LOCATED TO SUIT DUCTBANKS.
4. ENCLOSURES AND COVERS SHALL BE UL-LISTED.
5. ENCLOSURES, BOXES, AND COVERS SHALL COMPLY WITH TEST PROVISIONS OF ANSI/SCTE 77 FOR TIER 15 & 22 APPLICATIONS.
6. COVERS SHALL HAVE COEFFICIENT OF FRICTION OF NOT LESS THAN 0.50, IN ACCORDANCE WITH ASTM C1028.

SMALL HANDHOLE DETAIL
SCALE: N.T.S.

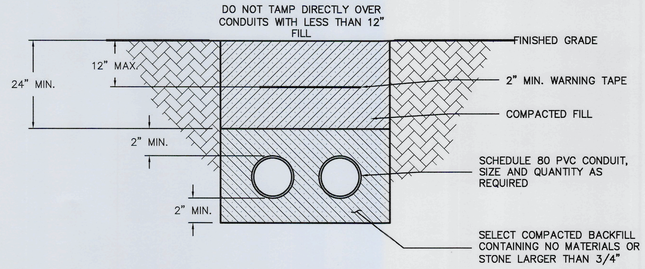

DIRECT BURIED DUCTBANK
SCALE: NTS

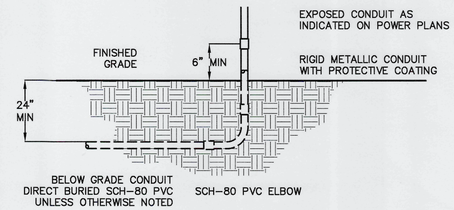

CONDUIT TRANSITION DETAIL
SCALE: NTS

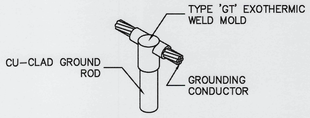

EXOTHERMIC WELD 'GT' CONNECTION
SCALE: NTS

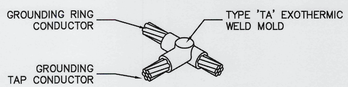

EXOTHERMIC WELD 'TA' CONNECTION
SCALE: NTS

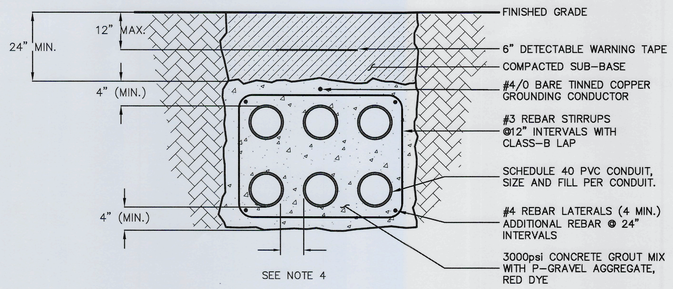

REINFORCED CONCRETE DUCTBANK
SCALE: NTS

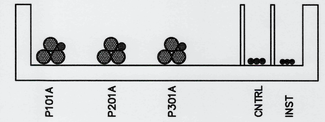

1
####E1.11

SECTION 1
NTS

REV.NO.	DESCRIPTION	DATE
0	ISSUED FOR BID	MAR 2021

REVISIONS

AUBREY A. HAUDRICOURT LICENSE PROFESSIONAL ENGINEER No 66861 STATE OF FLORIDA SEAL
3-17-2021
AUBREY A. HAUDRICOURT, P.E. No. 66861

McKIM&CREED
1365 Hamlet Avenue
Clearwater, Florida 33756
Phone: (727) 442-7196, Fax: (727) 461-3827
CA Lic. No. 29588
www.mckimcreed.com

Manatee County FLORIDA

LIFT STATION 12A ELECTRICAL PUMP & VFD REHABILITATION

ELECTRICAL
DETAILS

PROJ. START DATE:	2020. JUN
MCE PROJ. #	01024-0181
DRAWN	JG
DESIGNED	SS
CHECKED	MAC
PROJ. MGR.	AAH

SCALE
HORIZONTAL: N/A
VERTICAL: TBD

E1.11
DRAWING NUMBER
0
REVISION

STATUS:
ISSUED FOR BID

\\MCKIMCREED.COM\NASUNI\DATA\PROJ\01024\0181\WATER\80-DRAWINGS\ELECTRICAL\ DETAILS.DWG 03/17/2021 11:45:01 SUVATH SENG

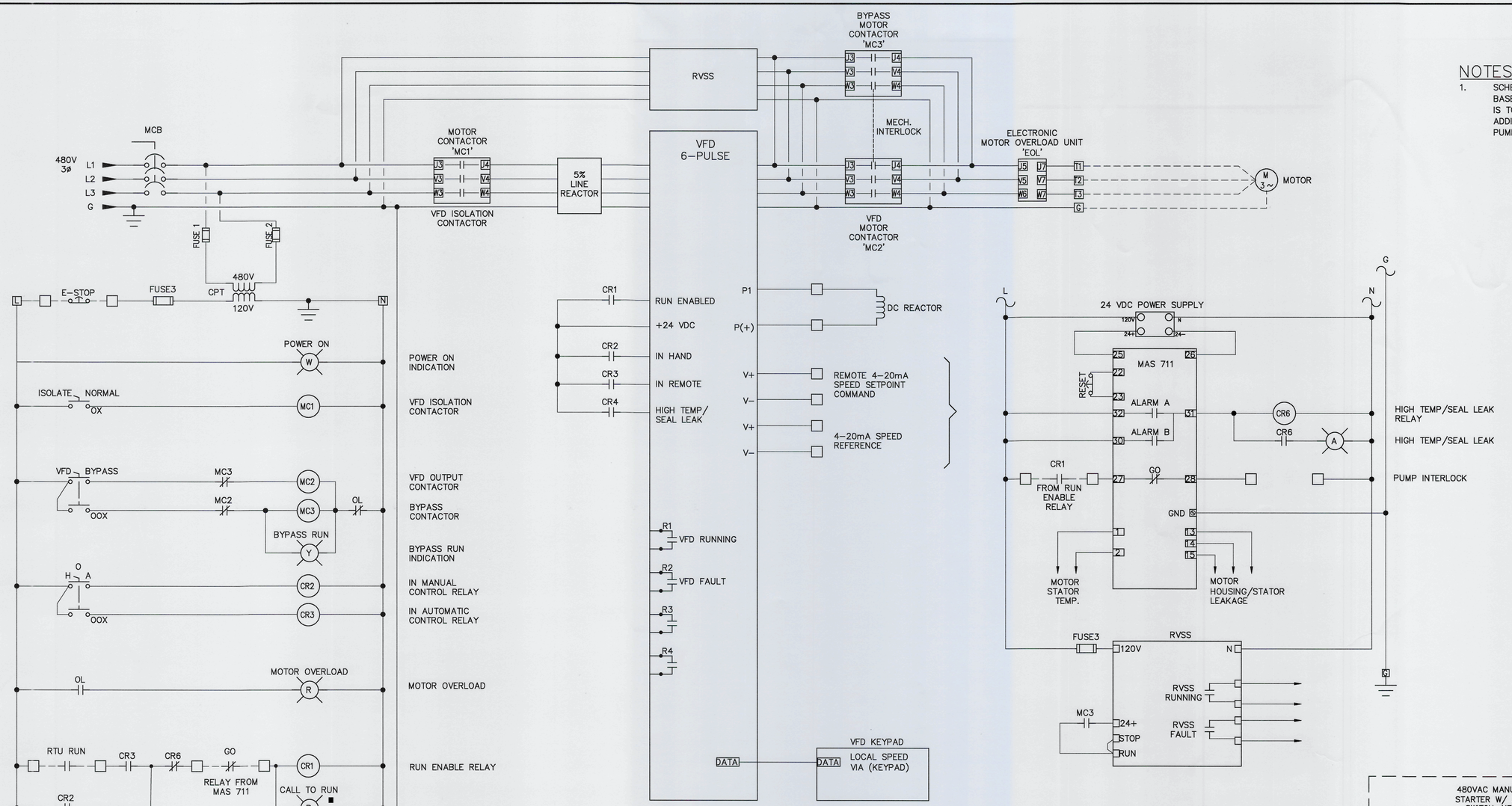

NOTES:

1. SCHEMATIC SHOWN IS MINIMUM REQUIREMENTS AND BASED OFF OF BASIS OF DESIGN PUMPS. CONTRACTOR IS TO VERIFY CONTROL REQUIREMENTS AND PROVIDE ADDITIONAL CONTROL EQUIPMENT AS NEEDED FOR PUMPS SELECTED.

LEGEND

- ■ DOOR MOUNT RESET, HOR SWITCH AND PILOT LIGHTS IN FRONT OF MCC.
- ▲ DEVICE LOCATED AT OR NEAR MOTOR EQUIPMENT

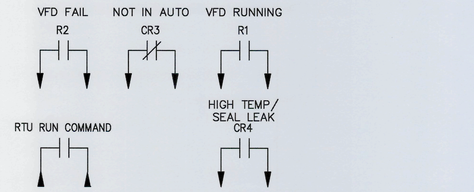

ALL STATUS & CONTROL SIGNALS COMMUNICATED BETWEEN VFD AND RTU VIA ETHERNET DATA HIGHWAY.

PUMP SCHEMATIC: PUMP#1, PUMP#2, PUMP#3

SCALE: NTS

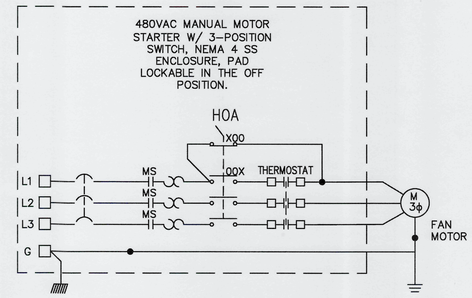

EXHAUST FAN SCHEMATIC

SCALE: NTS

TYPICAL FOR EXHAUST FANS

REV.NO.	DESCRIPTION	DATE
0	ISSUED FOR BID	MAR 2021

REVISIONS

AUBREY ARMAND HAUDRICOURT SEAL LICENSE No 66861 STATE OF FLORIDA PROFESSIONAL ENGINEER
3-17-21
AUBREY A. HAUDRICOURT, P.E. No. 66861

McKIM&CREED
1365 Hamlet Avenue
Clearwater, Florida 33756
Phone: (727) 442-7196, Fax: (727) 461-3827
CA Lic. No. 29588
www.mckimcreed.com

Manatee County FLORIDA

LIFT STATION 12A ELECTRICAL PUMP & VFD REHABILITATION

ELECTRICAL

ELECTRICAL CONTROLS SCHEMATICS

PROJ. START DATE:	2020. JUN
MCE PROJ. #	01024-0181
DRAWN	DP
DESIGNED	DC
CHECKED	MC
PROJ. MGR.	AAH

SCALE: HORIZONTAL: N/A VERTICAL: TBD

E1.12 DRAWING NUMBER

0 REVISION

STATUS: **ISSUED FOR BID**

1 ALL SYMBOLS

ANY INST · ANY OIT · ANY PLC · ANY OWS · ANY LIGHT · ANY FUNCTION

ANY FLOW · ANY LEVEL · ANY PRESSURE · ANY VALVE

ANY ACTUATOR · ANY PUMP · ANY EQPT

PLC

ANY HARDWARE · ANY MISC

3 INSTRUMENT/PLC BUBBLES

FIELD · PRIMARY · SECONDARY · HIDDEN

CONVERT I/P

E – VOLTAGE
I – CURRENT
P – PNEUMATIC
A – ANALOG
B – BINARY
H – HYDRAULIC
O – ELECTROMAGNETIC, SONIC
R – RESISTANCE (ELECT.)
D – DIGITAL

COMPUTE

- SUMMING
- DIFFERENCE
- MULTIPLYING
- DIVIDING
- ROOT EXTRACTION
- PROPORTIONAL
- DERIVATIVE
- AVERAGING
- RATIO
- EXPONENTIAL
- HIGH SELECTING
- LOW SELECTING
- INTEGRAL
- PID

5 INSTRUMENTATION FLOW

AVERAGING PITOT TUBE · FLUME · WEIR · TURBINE PROPELLER · POSITIVE DISPLACEMENT

VENTURI · PADDLE WHEEL · ULTRASONIC · VORTEX · MAGNETIC · ROTAMETER

STRAIGHTENING VANES · ORIFICE PLATE

6 INSTRUMENT LEVEL

FLOAT · ULTRASONIC LEVEL · RADAR (UNGUIDED) · RADAR (GUIDED) · CAPACITANCE · SUBMERSIBLE

7 INSTRUMENT PRESSURE/TEMPERATURE

VALVED TAP · DIAPHRAGM SEAL · TAPPED ISOLATING RING SEAL · RING SEAL (FULL LINE SIZE) · RTD/THERMOWELL

9 VALVES / GATES

GATE VALVE · PLUG VALVE · GLOBE VALVE · BALL VALVE

BALL VALVE (3-WAY) · 3 WAY VALVE (GENERAL) · COMBINATION VACUUM AND PRESSURE RELIEF VALVE · NEEDLE VALVE

BUTTERFLY VALVE · SWING CHECK VALVE · BALL CHECK VALVE · THROUGH PLUG VALVE

PRESSURE RELIEF VALVE · PRESSURE RELIEF/SAFETY VALVE · VACUUM RELIEF VALVE · PRESSURE-REDUCING REGULATOR

ANGLE VALVE · BACKFLOW PREVENTER · AIR RELEASE VALVE · STRAINER

SLUICE GATE · STOP/SLIDE GATE · HANDWHEEL · PINCH VALVE

DIAPHRAGM VALVE · ROTARYY VALVE · BACKPRESSURE REGULATOR · CHECK VALVE (GENERIC)

11 LINEWORK

IF–PIPE	
IF–EQPT	
IF–STRUCT	
IF–WIRE	
IN–SYMB	
IN–EQPT	
IN–INST	
IN–STRUCT	
IX–EQPT	
IX–INST	
IX–STRUCT	
IN–PIPE–MAIN	
IN–PIPE–AUX	
IN–PIPE–CAP	
IN–PIPE–HYDR	
IN–PIPE–PNEU	
IX–PIPE	
IX–PIPE–CAP	
IX–PIPE–HYDR	
IX–PIPE–PNEU	
IN–WIRE	
IN–CABLE–FIBER	
IN–CABLE–COAX	
IN–CABLE–TPS	
IN–CABLE–CAT6	
IN–SOFT–LINK	
IX–WIRE	
IX–CABLE–FIBER	
IX–CABLE–COAX	
IX–CABLE–TPS	
IX–CABLE–CAT6	
IX–SOFT–LINK	
I–TEXT	
I–SCHD–FINE	
I–SCHD–MED	
I–SCHD–BOLD	
I–BAND	

2 PUMPS

CENTRIFUGAL PUMP · CHEMICAL FEED PUMP · BLOWER (CENTRIFUGAL)

GEAR PUMP OR BLOWER (POSITIVE DISPLACEMENT) · CENTRIFUGAL WET PIT PUMP · SCREW PUMP

PROGRESSIVE CAVITY PUMP · PISTON PUMP · DIAPHRAGM PUMP

VERTICAL PUMP · SUBMERSIBLE VERTICAL PUMP

4 EQUIPMENT

FSH 12345 · MIXER · GRINDER · DAMPER

COMPRESSOR · TURBINE · AIR FILTER · STATIC MIXER

CALIBRATION CYLINDER · PULSATION DAMPENER

FILTER

BELT TRACKING SYSTEM · GBT

ROTARY FEEDER

BELT TRACKING SYSTEM · BFP

RUPTURE DISK

SCREW CONVEYOR

BELT CONVEYOR · TRUCK

8 CONTROL SYSTEM HARDWARE

OWS · PLC · ANTENNA · BLDG

KVM · ETHERNET SWITCH · CAMERA

RADIO · ROUTER · UPS

ETHERNET SWITCH · SERVER

10 MISCELLANEOUS

BLIND FLANGE · VENT · DRAIN · MOTOR · REFERENCE ARROW

REDUCER · GROUP LEADER · ACTUATOR · FCD NUMBER REFERENCE

PIPE MAT'L CHANGE · LINE EXTENSION · STATIC MIXER · HORN · TAG NUMBER REFERENCE

PULSATION DAMPENER · CALIBRATION CYLINDER · INTERLOCK · HORN/STROBE · FILTER

SURGE ARRESTOR · HOSE CONNECTION · QUICK CONNECT · AIR FILTER

INJECTOR

PIPE ARROW (MAIN) · PIPE ARROW (AUX) · I/O ARROW (AI) · I/O ARROW (AO) · I/O ARROW (DI) · I/O ARROW (DO)

RUPTURE DISK

NOTES:

1. ALL SYMBOLS MAY NOT BE UTILIZED FOR THIS PROJECT. ADDITIONAL SYMBOLS NOT SHOWN ON THIS DRAWING MAY BE SHOWN ELSEWHERE ON THE ELECTRICAL DRAWINGS.
2. EXISTING CONTROL PANEL WILL BE RELOCATED. NEW CONDUCTORS SHALL BE ROUTED TO ALL EXISTING AND NEW I/O.
3. PROGRAMMING SERVICES FOR DFS EQUIPMENT SHALL BE REQUIRED FOR ANY ADDITIONAL I/O.
4. ALL I/O SHALL REQUIRE LOOP CHECKS/TESTING TO INSURE PROPER OPERATION OF ALL I/O. IT IS RECOMMENDED THAT THE CONTRACTOR VERIFY OPERATION OF ALL EXISTING I/O PRIOR TO COMMENCING WORK AND PROVIDE LIST OF ANY DEFICIENCIES FOUND

REV.NO.	DESCRIPTION	DATE
0	ISSUED FOR BID	MAR 2021

REVISIONS

MICHAEL FABINI LICENSE No. 87173 STATE OF FLORIDA PROFESSIONAL ENGINEER SEAL
MICHAEL FABINI, P.E.
No. 87173

McKIM&CREED
1365 Hamlet Avenue
Clearwater, Florida 33756
Phone: (727) 442-7196, Fax: (727) 461-3827
CA Lic. No. 29588
www.mckimcreed.com

Manatee County FLORIDA

LIFT STATION 12A ELECTRICAL PUMP & VFD REHABILITATION

INSTRUMENTATION

INSTRUMENTATION SYMBOL SHEET 1

PROJ. START DATE:	2020. JUN
MCE PROJ. #	01024-0181
DRAWN	JG
DESIGNED	MFF
CHECKED	MAC
PROJ. MGR.	AAH

SCALE
HORIZONTAL: N/A
VERTICAL: TBD

I0.00
DRAWING NUMBER
0
REVISION

STATUS: ISSUED FOR BID

1 PID FUNCTION SYMBOLS

	FIRST LETTER		SUCCEEDING–LETTERS		
	MEASURED OR INITIATING VARIABLE	MODIFIER	READOUT OR PASSIVE FUNCTION	OUTPUT FUNCTION	MODIFIER
A	Analysis		Alarm		
B	Burner, Combustion		Programmer		
C	Conductivity (Electrical)			Control	Closed
D	Density or Specific Gravity	Differential			
E	Voltage		Sensor (Primary Element)	Eduction	
F	Flow Rate	Ratio (Fraction)			
G	Gaging		Glass, Viewing Device		
H	Hand				High
I	Current (Electrical)		Indicate		
J	Power	Scan			
K	Time, Time Schedule			Control Station	
L	Level		Light (Pilot)		Low
M	Motor				Middle, Intermediate
N	Vibration				
O	Operation	Offset	Orifice, Restriction		Open
P	Pressure, Vacuum		Point (Test) Connection		
Q	Quantity, Event	Integrate, Totalize	Integrate		
R	Radiation		Record, Print	Regulate	
S	Speed, Frequency	Safety		Switch	
T	Temperature			Transmit	
U	Multivariable	Trend	Multifunction	Multifunction	Multifunction
V	Viscosity	Vacuum		Valve, Damper, Louver, Gate	
W	Weight, Force, Torque		Well		
X	Unclassified		Unclassified	Unclassified	Unclassified
Y				Relay, Compute, Convert	
Z	Position			Final Control Element	Drive, Actuator, Unclassified Final Control Element

REV.NO.	DESCRIPTION	DATE
0	ISSUED FOR BID	MAR 2021

REVISIONS

MICHAEL FADINI LICENSE SEAL No. 87173 STATE OF FLORIDA PROFESSIONAL ENGINEER
MICHAEL FADINI, P.E. No. 87173

McKIM&CREED
1365 Hamlet Avenue
Clearwater, Florida 33756
Phone: (727) 442-7196, Fax: (727) 461-3827
CA Lic. No. 29588
www.mckimcreed.com

Manatee County FLORIDA

LIFT STATION 12A ELECTRICAL PUMP & VFD REHABILITATION

INSTRUMENTATION

INSTRUMENTATION SYMBOL SHEET 2

PROJ. START DATE:	2020. JUN
MCE PROJ. #	01024-0181
DRAWN	JG
DESIGNED	MFF
CHECKED	MAC
PROJ. MGR.	AAH

SCALE
HORIZONTAL: N/A
VERTICAL: TBD

I0.01
DRAWING NUMBER
0
REVISION

STATUS:
ISSUED FOR BID

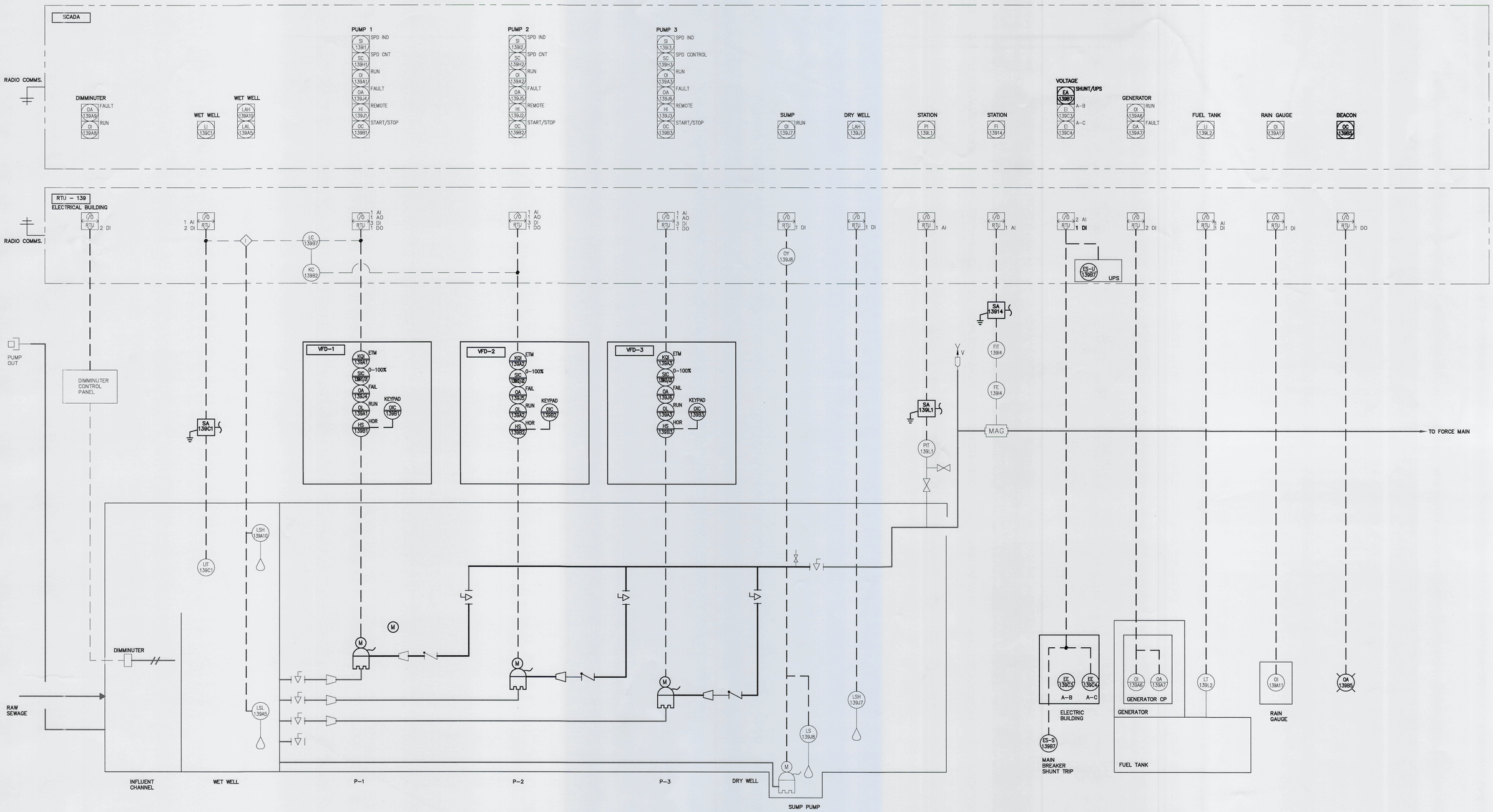

REV NO.	DESCRIPTION	DATE
0	ISSUED FOR BID	MAR 2021

REVISIONS

MICHAEL FADINI PROFESSIONAL ENGINEER LICENSE No 87173 STATE OF FLORIDA SEAL
3/17/21
MICHAEL FADINI, P.E.
No. 87173

McKIM&CREED
1365 Hamlet Avenue
Clearwater, Florida 33756
Phone: (727) 442-7196, Fax: (727) 461-3827
CA Lic. No. 29588
www.mckimcreed.com

Manatee County FLORIDA

LIFT STATION 12A ELECTRICAL PUMP & VFD REHABILITATION

INSTRUMENTATION

PROCESS AND INSTRUMENT DIAGRAM

PROJ. START DATE:	2020. JUN
MCE PROJ. #	01024-0181
DRAWN	JG
DESIGNED	MFF
CHECKED	MAC
PROJ. MGR.	AAH

SCALE
HORIZONTAL: N/A
VERTICAL: TBD

I1.00
DRAWING NUMBER
0
REVISION

STATUS: ISSUED FOR BID

\\MCKIMCREED.COM\NASUNI\DATA\PROJ\01024\0181\WATER\80--DRAWINGS\INSTRUMENTATION\I00.1 PID.DWG 03/17/2021 11:45:34 SUVATH SENG

NOTES:

1. LOCATE WINDOW IN POSITION WHICH ALLOWS DFS–RTU TO BE VISIBLE WITHOUT OPENING THE PANEL DOOR
2. SUBPANEL LAYOUT AND SCHEMATIC ARE DIAGRAMATTIC TO CONVEY MINIMUM REQUIREMENTS FOR FABRICATION AND INSTALLATION.
3. NEW SHUNT AND UPS COMMON ALARM SHALL BE WIRED TO SPARE INPUT B7. B7 IS NORMALLY CONFIGURED FOR ALARM IS SILENCED INDICATION AND SHALL BE CHANGED IN DFS SOFTWARE.

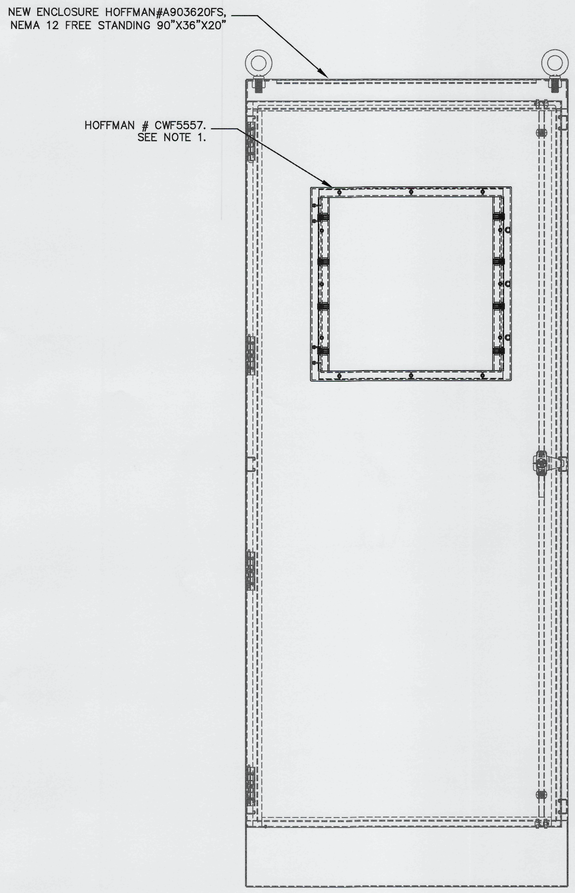

FRONT ELEVATION
SCALE: NTS

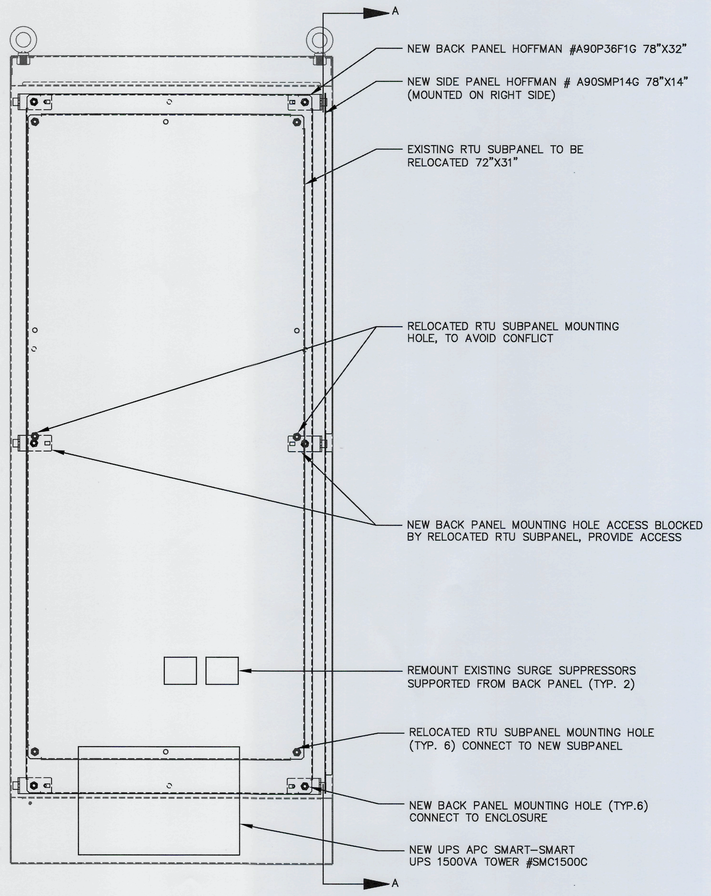

BACK PANEL
SCALE: NTS, SEE NOTE 2.

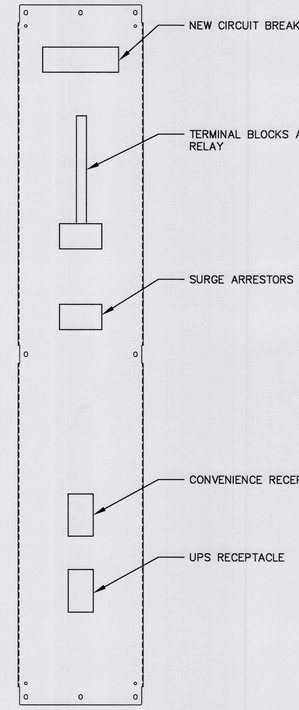

SIDE PANEL ELEVATION A
SCALE: NTS, SEE NOTE 2.

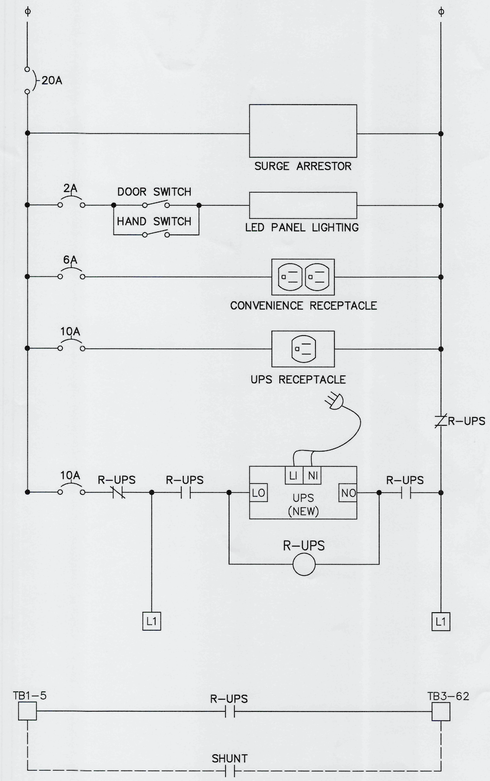

CONTROL PANEL SCHEMATIC DIAGRAM
SCALE: NTS, SEE NOTE 2.

REV.NO.	DESCRIPTION	DATE
0	ISSUED FOR BID	MAR 2021

REVISIONS

MICHAEL FADIN LICENSE NO. 87173 STATE OF FLORIDA PROFESSIONAL ENGINEER SEAL
MICHAEL FADIN, P.E.
No. 87173

McKIM&CREED
1365 Hamlet Avenue
Clearwater, Florida 33756
Phone: (727) 442-7196, Fax: (727) 461-3827
CA Lic. No. 29588
www.mckimcreed.com

Manatee County FLORIDA

LIFT STATION 12A ELECTRICAL PUMP & VFD REHABILITATION

INSTRUMENTATION

CONTROL PANEL

PROJ. START DATE:	2020. JUN
MCE PROJ. #	01024-0181
DRAWN	JG
DESIGNED	MFF
CHECKED	MAC
PROJ. MGR.	AAH

SCALE
HORIZONTAL: N/A
VERTICAL: TBD

I1.01
DRAWING NUMBER
0
REVISION

STATUS: ISSUED FOR BID